NASA Technical Memorandum 107497
AIAA–97–2634

High Temperature Brush Seal Tuft Testing of Selected Nickel-Chrome and Cobalt-Chrome Superalloys

James A. Fellenstein
Ohio Aerospace Institute
Cleveland, Ohio

Christopher DellaCorte
Lewis Research Center
Cleveland, Ohio

Kenneth D. Moore
Pratt & Whitney
West Palm Beach, Florida

Esther Boyes
Pratt & Whitney
East Hartford, Connecticut

Prepared for the
33rd Joint Propulsion Conference and Exhibit
cosponsored by AIAA, ASME, SAE, and ASEE
Seattle, Washington, July 6–9, 1997

National Aeronautics and
Space Administration

HIGH TEMPERATURE BRUSH SEAL TUFT TESTING OF SELECTED NICKEL-CHROME AND COBALT–CHROME SUPERALLOYS

by

James A. Fellenstein
Ohio Aerospace Institute
22800 Cedar Point Road
Cleveland, Ohio 44142

Christopher DellaCorte
NASA Lewis Research Center
21000 Brookpark Road
Cleveland, Ohio 44135

Kenneth D. Moore
Pratt & Whitney
P.O. Box 109600
West Palm Beach, Florida 33410

Esther Boyes
Pratt & Whitney
400 Main Street
East Hartford, Connecticut 06108

Abstract

The tribology of brush seals is of considerable interest to turbine engine designers because bristle wear continues to limit long term seal performance and life. To provide better materials characterization and foster the development of improved seals, NASA Lewis has developed a brush seal tuft tester. In this test, a "paintbrush" sample tuft is loaded under constant contact pressure against the outside diameter of a rotating journal. With this configuration, load and friction are directly measured and accurate wear measurements are possible. Previously reported research using this facility showed excellent data repeatability and wear morphology similar to published seal data and dynamic rig tests.

This paper is an update of the ongoing research into the tribology of brush seals. The effects of wire materials processing on seal wear and the tribological results for three journal coatings are discussed. Included in the materials processing were two nickel-chrome superalloys each processed to two different yield strengths. The results suggest that seal wear is dependent more on material composition than processing conditions.

Introduction

In earlier tuft tests completed with H214 (a nickel-chrome superalloy) against plasma sprayed chrome carbide, the tufts failed to complete the test sequence because of bristle flaring (ref 1). This result was unexpected because of the successful full scale seal testing of this alloy reported in the open literature (ref 2). Two possible explanations for this variation are differences in test techniques and materials processing. Standard full scale or segmented seal tests are completed with a fixed spacing and a predetermined interference between the brush and shaft. With a fixed spacing, the contact pressure and tangential frictional force at the seal interface vary as the brush and or shaft wear. The brush seal tuft tester used for these experiments was designed to provide a constant contact pressure between the tuft and journal. With a constant contact pressure the normal test load and tangential friction force remain constant throughout each test. This loading difference between test techniques can possibly explain why flaring is observed in the tuft tests and not full or segmented seal tests.

Materials processing can also explain the differences between tuft and full seal test results. The strength of the metal wire used in the fabrication of brush seals is dependent upon the manufacturing process in two ways. First,

the amount of residual cold work in the wire can be varied by the number and ordering of the in-process anneal steps completed as the wire is cold drawn from the initial rod size to the finished wire diameter. For example, IX750 (a nickel-chrome superalloy) wire is available as No. 1 Temper (AMS5698) and Spring Temper (AMS5699) with 15-20% and 30-65% cold work, respectively, retained after the final in-process anneal. Secondly, heat treating the wire after drawing to final diameter will affect the wire strength as well. These heat treatments can vary from simple anneal cycles to precipitation hardening cycles so the affect on wire strength can vary widely.

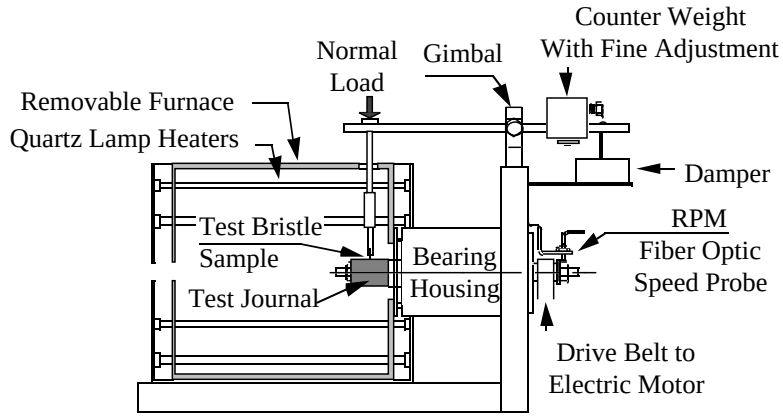

Figure 1 : Cross section side view of brush seal tuft test rig.

The objective of the present work was to investigate the effects of materials processing on the wear characteristics of brush seals. This study also expands NASA Lewis' tuft testing database with the addition of two new coatings: high velocity oxygen fuel (HVOF) chrome carbide and plasma sprayed zirconia. To conduct this study, wire samples from two nickel-chrome superalloys (H214 and IX750) were processed to two yield strengths. Tufts were made from each sample and tested against plasma sprayed chrome carbide, HVOF chrome carbide, and zirconia. Also, included in this report is a comparison of these latest results to previous tests with H25 (a cobalt-chrome superalloy) against plasma sprayed chrome carbide and recently completed H25 tests against HVOF Cr_2C_3 and zirconia.

Test Apparatus, Specimens and Procedure

Test Apparatus. Figure 1 shows a cross sectional view of the NASA Lewis Research Center brush seal tuft test rig used for this work. The maximum test spindle speed and temperature are 17,000 RPM and 800 °C (1292 °F) respectively. Constant contact pressure between the tuft and journal is maintained by a two degree of freedom gimbal. The gimbal is fitted with a counter balance that allows precise loading within +/- 2 grams and a low stiffness paddle damper to eliminate high frequency noise. When mounting the test journals, the runout is limited to a maximum of 0.009 mm (0.00035 in.). Additional test facility information is available in references 1 and 3.

Tuft Specimens. Two yield strength versions of H214 and IX750 were used for these experiments. Each wire was produced to a diameter of 0.071 mm (0.0028 in). The high strength version of IX750 (IX750H) was precipitation heat treated to AMS5699 para. 3.3.2.1 to maximize ultimate strength (less than 2% ductility). The low strength version (IX750L) was resolutioned and then precipitation heat treated per AMS 5699 para. 3.3.3.1 which reduced the ultimate strength by 40% with a 10X increase in ductility. The final ultimate tensile strength for the IX750L and IX750H are 1062 MPa (154 ksi) and 1855 MPa (269 ksi) respectively. H214 is a non-hardenable alloy so the high strength version is the as-drawn wire and the low strength version was partially annealed following drawing to the finished diameter. AMS specifications do not exist for H214 and H25 brush seal wire. The final ultimate tensile strength for the H214L and H214H are 372 MPa (54 ksi) and 1379 MPa (200 ksi) respectively. Table 1 lists the wt.% composition for both test materials and the industry standard H25.

A schematic of a typical brush seal tuft is shown in Figure 2. Each tuft is made with

approximately 920 bristles TIG welded into a superalloy collar. After welding, the tufts are diamond ground to a forty-five degree angle and a fence height of 1.3 mm (0.050 in.). Before testing, each tuft is ultrasonically cleaned in consecutive five minute baths of acetone and methyl alcohol.

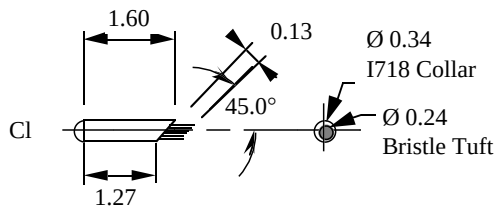

Figure 2 : Tuft specimen configuration showing dimensions and geometry (dimensions are in cm).

Journal Specimens. The journals for this research were coated with plasma sprayed nickel-chrome bonded chrome carbide, HVOF nickel-chrome bonded chrome carbide, or plasma sprayed zirconia. After spraying, the coatings were diamond ground to a final coating thickness between 0.102 mm (0.004 in.) and 0.152 mm (0.006 in.). Figure 3 shows the geometry and dimensions of a typical sprayed and diamond ground journal. Each journal can accommodate five 3 mm wide wear tracks. Before the first test on each journal, it is washed in ethyl alcohol, scrubbed with levigated alumina, and finally rinsed with distilled water to remove any residual contaminants.

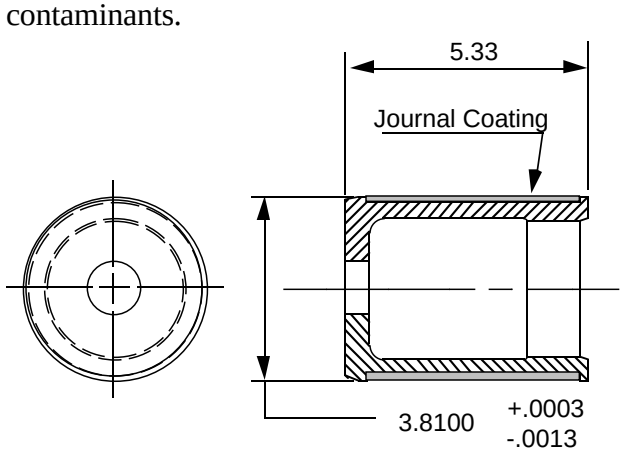

Figure 3 : Journal specimen configuration showing dimensions and geometry (dimensions are in cm).

Tuft Test Procedure. Each tuft test is conducted in two 25 hour segments to allow for intermediate brush wear measurements. Two tufts were tested for each combination reported for a total of 100 hours. The standardized test conditions used for this study were 650 ˚C (1200 ˚F), 24.0 m/s (78.5 ft/s) surface speed, and 0.49 N (0.11 lbf) test load. The resulting contact pressure is 75.8 kPa (11 psi). During each test, the frictional force, temperature, and speed are measured using a ±250 gram linear voltage displacement transformer (LVDT), a type K thermocouple and an optical speed pick–up. A computer data acquisition system records these values every six minutes. The recorded friction value represents the average of three hundred samples taken over a fifteen second interval. Since these tests are completed with a constant contact pressure, the friction remains constant throughout each test. Therefore, the friction coefficient values presented below are the averages of the recorded frictional force values divided by the known test load.

Brush wear is determined by calculating the average change in bristle length from inscribed witness marks to the bristle ends. To complete this task, photomicrographs (25x) are taken before and after each test segment and eight reference locations are measured to determine the average brush wear. The brush wear factor is then calculated by multiplying the average wear by the tuft cross sectional area to determine the mean wear volume and dividing by the test load and sliding distance.

Post test analysis of the journals is completed by measuring the cross sectional area of the wear track with a stylus type surface profilometer at 90° intervals around the journal. After completing the four traces, the average wear area is calculated and multiplied by the journal circumference to determine the wear volume. Finally, the wear volume is divided by the test load and sliding distance to determine the journal wear factor. Journal wear measurements are completed after each fifty hour test.

Results and Discussion

Brush wear. All ten of the H214 tufts tested failed to complete the fifty hours of testing because of bristle flaring. No flaring of the IX750 or H25 bristles was observed. As seen in Figure 4, there was a marginal difference in brush wear performance between the low and high strength IX750 when tested against HVOF Cr_2C_3. However, in tests completed with the IX750L, the resulting brush wear for PS Cr_2C_3 was nearly 50% lower than HVOF Cr_2C_3. Unlike the nickel-chrome IX750, the cobalt–chrome H25 exhibited 33% lower brush wear against the HVOF Cr_2C_3 when compared to the plasma sprayed version.

The continued failure of the H214 to complete the tuft tests is not an indication that this alloy should not be used in brush seal applications. Tuft testing is conducted with a constant load and friction unlike what the bristles experience in actual seal applications. However, the flaring of the tufts does raise questions about the long term effectiveness of the wire in turbine engine applications. Engine transients after periods of hot running may cause permanent bristle bending resulting in increased seal leakage. This would be similar to the increased leakage associated with a damaged labyrinth seal.

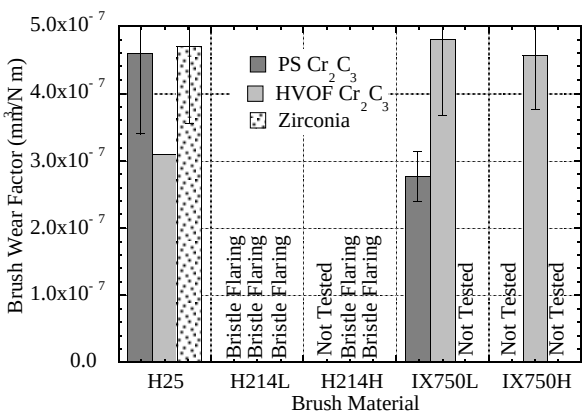

Figure 4 : Brush wear factors for two yield strength versions of H214 and IX750 compared to H25.

Journal wear. Due to the poor performance of the H214 samples, journal wear factors were not determined. The results for the IX750 and H25 are shown in Figure 5. As seen in Figure 5, the journal wear trends, with respect to wire processing effects, were similar to the brush wear trends described above. Only a marginal improvement in journal wear is observed with IX750H compared to IX750L tufts. However, the journal wear factor was much lower with the plasma sprayed coating than the HVOF coating for the IX750L. Less difference in journal wear is seen between the two coatings when using H25 tufts but the HVOF coating did perform slightly better. Showing again, that the nickel–chrome superalloys performed better against the plasma sprayed chrome carbide while the cobalt–chrome alloy exhibited lower journal wear against the HVOF version.

Previous tuft tests completed by Hawthorne[4], evaluated the performance of H25 and IX750 tufts against a d–gun nickel-chrome bonded chrome carbide. These tests were completed at 450 ˚C (842 ˚F) with a sliding speed of 100 m/s (328 ft/s). In this study, the combined brush and disc wear rate of the IX750 against d-gun Cr_2C_3 was approximately 50% lower than H25 wear rate. The current study provides similar results with the combined wear rate of the IX750L/PS Cr_2C_3 being 43% lower than the H25/PS Cr_2C_3 tribopair. The trend is reversed for the HVOF Cr_2C_3 coating with the H25 showing 59% and 52% less wear than the IX750L and IX750H respectively. These results emphasize the importance of properly matching the tuft and coating materials to obtain the overall lowest system wear.

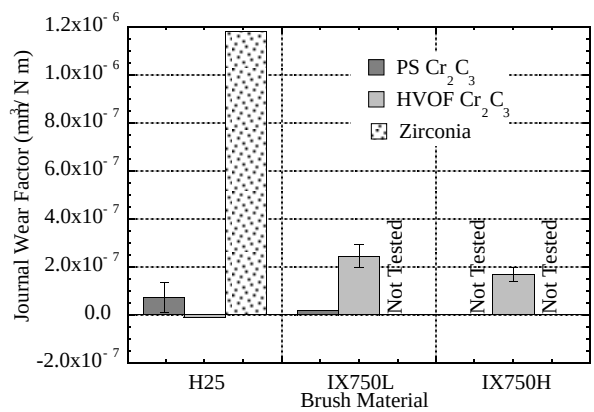

Figure 5 : Journal wear factors for two yield strength versions of H214 and IX750 compared to H25.

Friction coefficient. Friction coefficients for both chrome carbide coatings ranged from 0.16 to 0.32 (figure 6). In the three tests completed with the zirconia coating the measured friction coefficient was above 0.50. Again, minimal variation was seen between high and low strength version of each wire. Also, the performance variation between chrome carbide coating deposition methods observed in the brush and journal wear factors was not as pronounced in the measured friction coefficients.

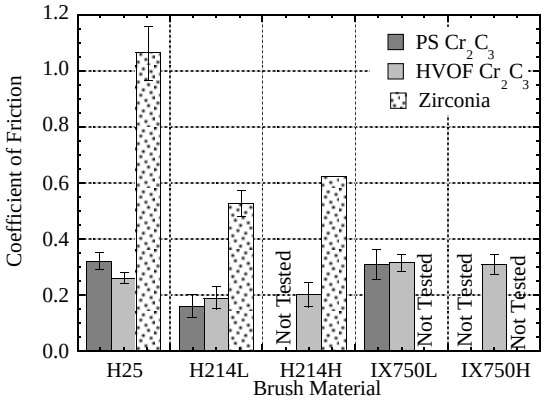

Figure 6 : Friction coefficient for two yield strength versions of H214 and IX750 compared to H25.

Concluding Remarks

Based on the results observed during this study, wire processing is not as important as composition. Both versions of the H214 wire failed to complete the test sequence. IX750 successfully completed the tests but minimal improvement in brush and journal wear were observed with the IX750H when compared to the IX750L.

Future work will continue to improve the tribological characteristics of brush seals. High temperature ceramics and advanced alloys will be tested to improve the high temperature capabilities of these seals. Emphasis will also be directed towards transitioning the brush seal tuft test results into full seal tests and applications.

References

1. Fellenstein, J.A., DellaCorte, C., Moore, K.D., and Boyes, E., "High Temperature Brush Seal Tuft Testing of Metallic Bristles Versus Chrome Carbide," NASA TM–107238, AIAA paper 96–2908, 1996.

2. Derby, J., and England, R., "Tribopair Evaluation of Brush Seal Applications," AIAA paper 92–3715.

3. Fellenstein, J.A., and DellaCorte, C., "A New Tribological Test for Candidate Brush Seal Materials Evaluation," NASA TM-106753, Tribology Transactions, Volume 39, 1, 173-179, 1996.

4. Hawthorne, H.M., " Brush-on-disc simulation tribotesting of materials for gas turbine-compliant seal components," Tribology International, Volume 27 Number 2, 1994.

Table 1: Chemical Composition of Wire Samples (wt.%)

	Co	Ni	Cr	Fe	W	OTHERS (< 6 wt.%)
H25	51	10	20	3	15	Mn, Si, C
H214	---	75	16	3	---	Mn, Si, Al, C, B, Zr, Y
IX750	0-1	70	14-17	5-9		Ti, Al, Nb, C

REPORT DOCUMENTATION PAGE

Form Approved
OMB No. 0704-0188

Public reporting burden for this collection of information is estimated to average 1 hour per response, including the time for reviewing instructions, searching existing data sources, gathering and maintaining the data needed, and completing and reviewing the collection of information. Send comments regarding this burden estimate or any other aspect of this collection of information, including suggestions for reducing this burden, to Washington Headquarters Services, Directorate for Information Operations and Reports, 1215 Jefferson Davis Highway, Suite 1204, Arlington, VA 22202-4302, and to the Office of Management and Budget, Paperwork Reduction Project (0704-0188), Washington, DC 20503.

1. AGENCY USE ONLY (*Leave blank*)

2. REPORT DATE
July 1997

3. REPORT TYPE AND DATES COVERED
Technical Memorandum

4. TITLE AND SUBTITLE
High Temperature Brush Seal Tuft Testing of Selected Nickel-Chrome and Cobalt-Chrome Superalloys

5. FUNDING NUMBERS
WU–538–06–14

6. AUTHOR(S)
James A. Fellenstein, Christopher DellaCorte, Kenneth D. Moore, and Esther Boyes

7. PERFORMING ORGANIZATION NAME(S) AND ADDRESS(ES)
National Aeronautics and Space Administration
Lewis Research Center
Cleveland, Ohio 44135–3191

8. PERFORMING ORGANIZATION REPORT NUMBER
E–10796

9. SPONSORING/MONITORING AGENCY NAME(S) AND ADDRESS(ES)
National Aeronautics and Space Administration
Washington, DC 20546–0001

10. SPONSORING/MONITORING AGENCY REPORT NUMBER
NASA TM–107497
AIAA–97–2634

11. SUPPLEMENTARY NOTES
Prepared for the 33rd Joint Propulsion Conference and Exhibit cosponsored by AIAA, ASME, SAE, and ASEE, Seattle, Washington, July 6–9, 1997. James A. Fellenstein, Ohio Aerospace Institute, 22800 Cedar Point Road, Cleveland, Ohio 44142; Christopher DellaCorte, NASA Lewis Research Center; Kenneth D. Moore, Pratt & Whitney, P.O. Box 109600, West Palm Beach, Florida 33410; Esther Boyes, Pratt & Whitney, 400 Main Street, East Hartford, Connecticut 06108. Responsible person, James A. Fellenstein, organization code 5140, (216) 433–6065.

12a. DISTRIBUTION/AVAILABILITY STATEMENT
Unclassified - Unlimited
Subject Category 23
This publication is available from the NASA Center for AeroSpace Information, (301) 621–0390.

12b. DISTRIBUTION CODE

13. ABSTRACT ***(Maximum 200 words)***
The tribology of brush seals is of considerable interest to turbine engine designers because bristle wear continues to limit long term seal performance and life. To provide better materials characterization and foster the development of improved seals, NASA Lewis has developed a brush seal tuft tester. In this test, a “paintbrush” sample tuft is loaded under constant contact pressure against the outside diameter of a rotating journal. With this configuration, load and friction are directly measured and accurate wear measurements are possible. Previously reported research using this facility showed excellent data repeatability and wear morphology similar to published seal data and dynamic rig tests. This paper is an update of the ongoing research into the tribology of brush seals. The effects of wire materials processing on seal wear and the tribological results for three journal coatings are discussed. Included in the materials processing were two nickel-chrome superalloys each processed to two different yield strengths. The results suggest that seal wear is dependent more on material composition than processing conditions.

14. SUBJECT TERMS
Brush seal; Seal

15. NUMBER OF PAGES
7

16. PRICE CODE
A02

17. SECURITY CLASSIFICATION OF REPORT
Unclassified

18. SECURITY CLASSIFICATION OF THIS PAGE
Unclassified

19. SECURITY CLASSIFICATION OF ABSTRACT
Unclassified

20. LIMITATION OF ABSTRACT