HIGH ACCURACY TEMPERATURE MEASUREMENTS USING RTD'S WITH CURRENT LOOP CONDITIONING

Gerald M. Hill
NASA Lewis Research Center
Cleveland, Ohio 44135

KEYWORDS

Conditioning, RTD, Temperature, Gages, Sensors

ABSTRACT

To measure temperatures with a greater degree of accuracy than is possible with thermocouples, RTD's (resistive temperature detectors) are typically used. Calibration standards use specialized high precision RTD probes with accuracies approaching 0.001 °F. These are extremely delicate devices, and far too costly to be used in test facility instrumentation. Less costly sensors which are designed for aeronautical wind tunnel testing are available and can be readily adapted to probes, rakes, and test rigs. With proper signal conditioning of the sensor, temperature accuracies of 0.1 °F is obtainable. For reasons that will be explored in this paper, the Anderson current loop is the preferred method used for signal conditioning. This scheme has been used in NASA Lewis Research Center's 9x15 Low Speed Wind Tunnel, and is detailed below.

INTRODUCTION

The platinum resistance temperature detector, or PRTD, has been the choice for all high accuracy resistance thermometers since C.H. Meyers constructed the first glass enclosed helical coil of platinum in 1932.[1] A very fragile sensor with a slow thermal response, the PRTD temperature sensor has been primarily used as a laboratory standard. Application of RTD's in a wind tunnel environment has been limited due to the harsh conditions that the gage is exposed to. Physical strain of the gage element leads to false temperature measurements, and early attempts at sturdier gages resulted in slow response. Vibrations and shock would also damage the finely wound platinum wires.[2]

As manufacturing technology improved, gages designed for industrial and aerospace applications have emerged. Wire wound gages encased in glass or ceramic, and metal thin film detectors (THD) which incorporate vibration tolerant, fast response sensors in a small package, are now suitable for many wind tunnel applications.

The conditioning approach used for the highest precision temperature measurement utilizes a constant current loop in a four wire Kelvin connection, for the signal conditioning of an RTD, as seen in Fig. 1.

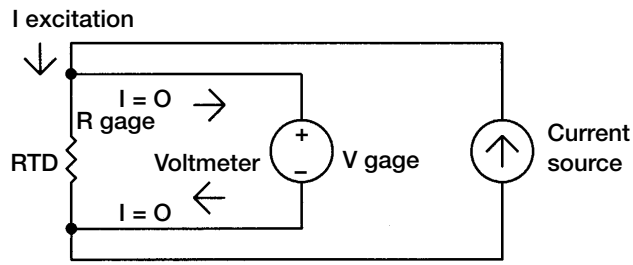

Figure 1.—Constant current loop.

If the output voltage is sensed by a high impedance voltmeter the effects of the lead wire resistance can be ignored. A change in the resistance of the wires supplying the current to the gage will not effect the measurement. Since the current in the loop is held constant, its level is always known through the gage. The output voltage level is directly related to the change in the gage's resistance. Any drift in the constant current source will result in an error to the temperature measurement. This is considered a percent of full scale error, therefore it becomes critical to use a stable current source. To meet a 0.1 °F temperature error requirement, the combined current source accuracy and stability should be within ±0.02 % of current setpoint.

Bias voltage

An inherent problem with using an RTD for high resolution, narrow range, temperature measurements with this conditioning method is the large bias voltage associated with any resistive sensor, in comparison to it's signal level. A typical 100 Ω RTD, excited with 1 mAmp excitation current, will exhibit an output of 100 mV, at 32 °F . At 200 °F with the same current level, the resistance increases to 137 Ω, the voltage across the gage is 137 mV for a resolution of 0.220 mV/°F.

$$\text{Resoultion} = \frac{(137.0 - 100)\text{mV}}{(200 - 32)°\text{F}} = 0.220 \ \ \text{mV/°F}$$

Although the voltage delta due to the temperature change was 37 mV, the initial bias of 100 mV would require an input range of ±160 mV range to the facility's 14 bit NEFF 400 A/D, making the resolution of the measurement 19.53 uV/bit. The conditioned RTD signal equals 0.22mV/°F , for a sensitivity of 0.089 °F/bit. If the bias voltage could be neglected, the same signal level of 37.0 mV over the 168 °F temperature delta could be used with a NEFF range of ±40 mV. This represents a sensitivity of 0.022 °F/bit.

One method used to eliminate the bias is to generate a separate bias voltage (in the former example 100 mV) and subtract if from the signal prior to the NEFF's input. This bucks the bias voltage level, so that only the temperature information is sampled. The problem with this method is that the bucking voltage signal source has to be absolutely stable; any drifting would create an error in measurement. The complexity of the circuit is increased. A relatively new method for constant current conditioning has been developed which addresses all of these shortcomings, and therefore allows for a more accurate temperature measurement.

APPROACH

Voltage difference scheme

An innovative current loop signal conditioning method, developed by Karl Anderson, an Instrumentation Systems Engineer at NASA's Dryden Flight Research Center, was originally developed to overcome the inherent difficulties associated with the classical Wheatstone bridge circuit for strain gage conditioning.[3] This design conveniently subtracts the bias voltage from the temperature measurement, allowing for a higher resolution in the measurement. This method was able to satisfy research requirements for a 0.1 °F measurement accuracy in the NASA Lewis Research Center's 9 x 15 Low Speed Wind Tunnel (9x15 LSWT). Figure 2 illustrates the theory behind the voltage difference measurement scheme.

The RTD is modeled as a combination of the initial resistance R_{GAGE} and the resistance change due to temperature, ΔR. Wire resistance $R_{w1} - R_{w4}$ is the resistance due to the lead wires. The instrumentation amplifier which senses the voltage across the sensor has a high enough input impedance that the current flow through these leads is negligible, and there is no voltage drop across R_{w3} or R_{w4}. R_{REF} is in series with the sensor with the same current flowing through both resistors. This develops a voltage V_{REF} which is equal to V_{GAGE} when R_{REF} equals R_{GAGE}, and is subtracted from the sensor voltage.

$$V_{OUT} = V_{RTD} - V_{REF}$$

$$V_{OUT} = (I_{EXCIT})(R_{GAGE} + \Delta R) - (I_{EXCIT})(R_{REF})$$

if $R_{REF} = R_{GAGE}$ then

$$V_{OUT} = (I_{EXCIT})(\Delta R)$$

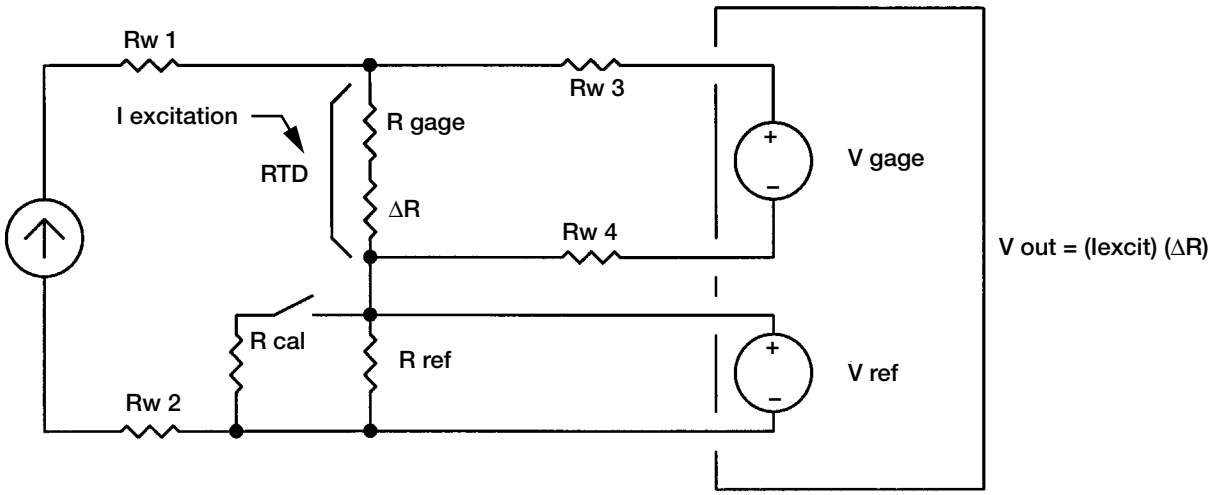

Figure 2.—Voltage difference measurement scheme.

The initial slight difference between the sensor resistance and the reference resistor is treated as an offset which is removed in the data reduction system. This results in an output voltage which is directly proportional to the difference between R_{REF} and R_{GAGE}.

Circuit description

The circuit used for a voltage difference measurement is shown in Figure 3. U1 is a LM10CLN type dual operational amplifier with voltage reference, configured in a constant current source circuit. By utilizing precision resistors with low temperature coefficients (<25 PPM), current drift due to temperature effects are minimized. The output of the first stage is $2\,V_{REF}$, and is set by the ratio of R1 and R2. R3 and R4 divide this output by two, and is fed into the second stage of the op amp, which maintains the voltage across R_{REF} equal to V_{REF}. This output is the constant current I_{EXCIT}. The current loop is shown on Fig. 3 in bold. This current has been tested to have a drift of less than 0.02 % of excitation level, (100+ hour test in calibration facility, at constant temperature).

The current level can be monitored by observing V_{REF}. V_{GAGE} is sensed via the instrumentation amplifier (BURR BROWN INA114) which is used due to it high input impedance and low output referenced errors. This amplifier has a programmable gain which is set with a resistor, R_{GAIN}, across pins 1 and 8. For this test the gain equaled 10. The reference resistor is chosen to be equal to the gain times the nominal gage resistance,

$$R_{REF} = (\text{Gain})(R_{GAGE})$$

$$R_{REF} = (10)(100\ \Omega)$$

$$R_{REF} = 1000\ \Omega$$

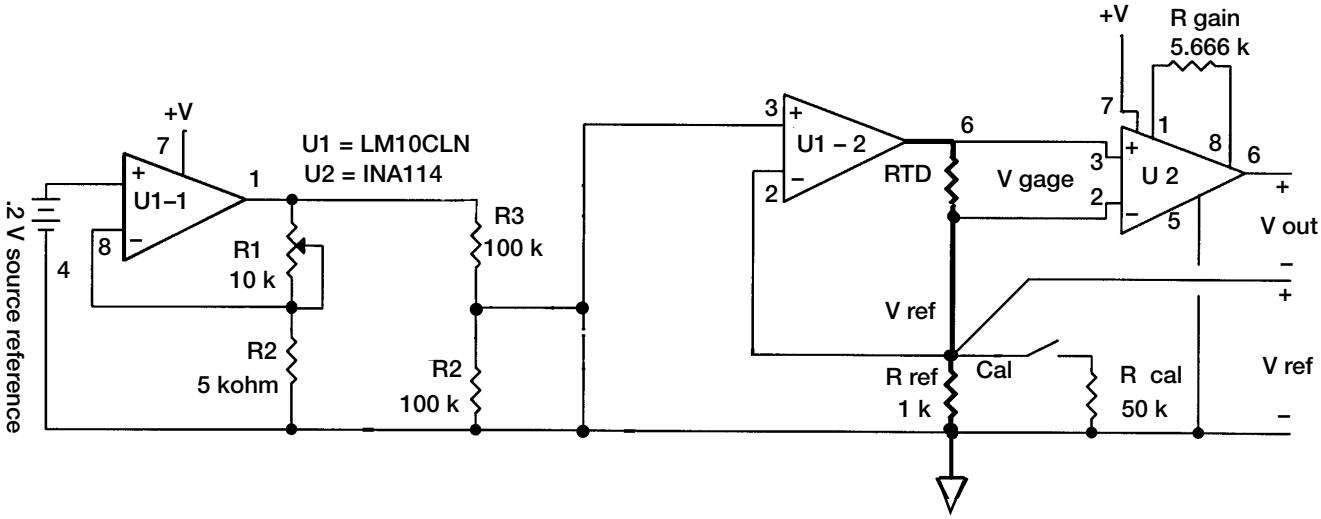

Figure 3.—Anderson loop circuit.

This ensures that the bias is subtracted from the temperature information. The RTD is connected in a 4 wire Kelvin connection.

The subtraction of the bias is done by connecting the amplifier's sense terminals (pins 2 and 3) across the sensor, the output reference terminal (pin 5) to the lower potential end of the reference resistor R_{REF} and taking the measurement output referenced to the positive side of R_{REF}. The resultant signal V_{OUT} is

$$V_{OUT} = V_{GAGE} - V_{REF}$$

which is the desired output. This is a floating differential output, with good S/N ratio and noise immunity.

This design minimizes the effect of excitation current variations. Since the current flows through both R_{GAGE} and R_{REF}, any change in I_{EXCIT} will result in a percent of reading error as opposed to a percent of full scale error.

Calibration Methodology

The Anderson current loop provides for a convenient approach to calibrate the gage's overall system end-to-end sensitivity.[4] This is accomplished by changing the gage excitation current by a known amount, ΔI_{CAL}. By shunting resistor R_{CAL} across R_{REF} with a switch, the additional current ΔI_{CAL} flows through R_{GAGE}, and is calculated as

$$\Delta I_{CAL} = V_{REF}/R_{CAL}$$

The constant current regulator forces enough current through the loop to maintain the voltage drop across R_{REF} to equal the previously set reference level. The addition of ΔI_{CAL} through the gage appears at the output as an increase in voltage,

$$\Delta V_{CAL} = \Delta I_{CAL} R_{GAGE} = IR_{CAL}$$

as if there is an increase in R_{GAGE}. This resistance can be sized to provide an apparent ΔT which can be observed at the data system. This provides a reliable system measurement sensitivity factor when the R_{CAL} switch is closed.

UHB FAN TEST

One aspect of a joint NASA and Pratt & Whitney UHB (Ultra High Bypass) Fan Program, which ran from February to September 1995 in the Lewis Research Center's 9 x 15 Low Speed Wind Tunnel, was to measure the fan's efficiency by the temperature change across the rotor. Four rakes with ten thermocouples located radially on each rake, were placed downstream of the rotor, evenly spaced circumferentially. They utilized measured extension leads, which were calibrated to minimize errors in

measurement. An additional rake consisting of ten 100 Ω platinum RTD's, (PRTD α = 0.003923) was included. Upstream of the model's bellmouth a reference freestream rake with one thermocouple placed at centerline, and four additional TCs at a 1 foot radius spaced at 0°, 90°, 180°, 270°, was installed to measure upstream temperatures. RTD's were also placed at a close proximity to the outer radius thermocouples. Extensive calibrations of the thermocouples yielded a 0.5 °F accuracy.

The RTD's were conditioned with the Anderson constant current loop method previously described. The excitation level, I_{EXCIT}, was chosen to be 0.5 mA to lessen the chance of self heating of the gage. With a temperature range of 32 to 150 °F the measurement would vary from 0 to 128 mV which was sampled with the facility's data acquisition system with a sensitivity of 0.042 °F/bit. The rakes were initially placed in a temperature stable oven and any offsets were normalized with a reference standard RTD probe (with 0.002 °F accuracy). The model was operated with the bellmouth and a variable fan exit nozzle (VFEN) at Mach 0.04.

RESULTS

After allowing the temperature transients to settle, a scrolling plot was obtained for both the TC's and the RTD's on the reference freestream rake. The results of one data sequence are displayed in Fig. 4, where RTTTOA (RTD's), and RTTROA (TC's) were calculated as

$$\mathrm{RTRROA}_{(1-4)} = \mathrm{REF\ \ RTD}_{(1-4)} / \mathrm{REF\ \ RTD}_{A}$$

$$\mathrm{RTTROA}_{(1-5)} = \mathrm{REF\ \ TC}_{(1-5)} / \mathrm{REF\ \ TC}_{AVG}$$

where REF RTD_{AVG} and REF TC_{AVG} was the average of the four RTD's or five thermocouples respectively. While the calculated average temperature between the two methods of temperature measurement are within 0.13 °F (75.11 °F versus 74.98 °F), the spread of the thermocouples was greater than 0.74 °F, and the RTD spread was less than 0.08 °F over the same time period.

While there is still work to be done in optimizing the design of the RTD sensors used in an aero test environment, such as the large flow recoveries associated with the RTD sensor as opposed to thermocouples, calculations derived from the RTD measurements were comparable to those obtained with the calibrated thermocouples.

LESSONS LEARNED

Single Current Loop

Due to the time restraints imposed by the test, and the unfamiliarity with the possibilities that the Anderson loop provides, there are significant improvements possible which could further improve the validity of the measurement. For the P & W Fan test, all RTD's were conditioned with individual excitation

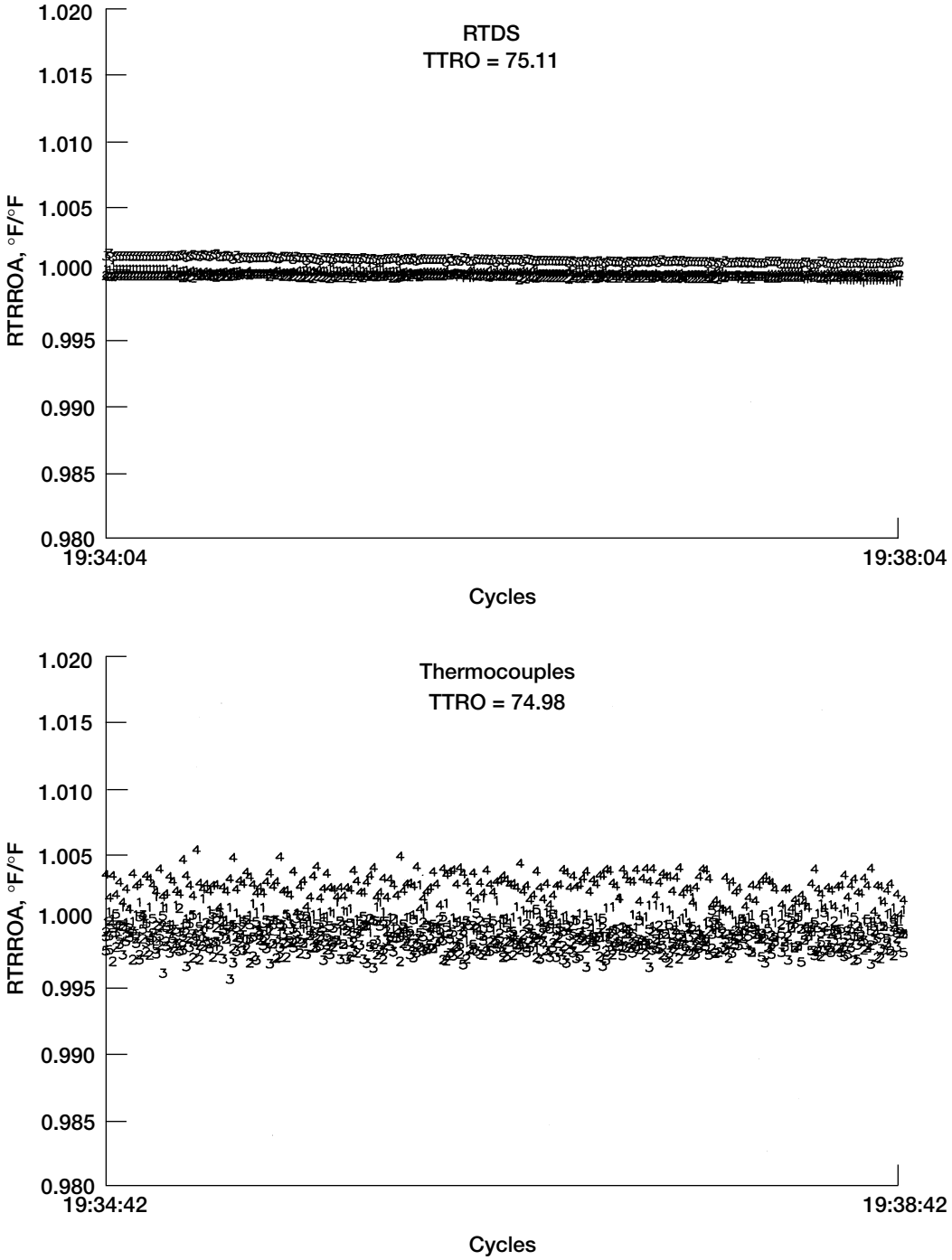

Figure 4.—Test data.

currents, from separate discrete conditioners. While the stability of the current source was proven at Lewis's calibration facility to be sufficient for the measurement, any variations between I_{EXCIT} levels would represent an error in measurement. By wiring all of the RTD's in both rakes into a single loop, one excitation current flows through all gages. Any variations would be the same in all gages, and it's associated error therefore minimized. An added benefit of this arrangement is the reduction in overall wires from 56 to 20. Figure 5 shows this configuration. To alleviate the possibility of having a broken wire or open gage break the loop and stop current flow in all gages, a silicon diode could be paralleled across each RTD to shunt the current in case of a failure. By keeping I_{EXCIT} low enough, the voltage drop across a working gage is far less than the level necessary to turn on the diode. In the event of a failure, the diode conducts so that the current continues to flow through the other gages. The outputs would be sensed individually by the facility data acquisition system, where the average temperature would be calculated and the difference in temperature determined.

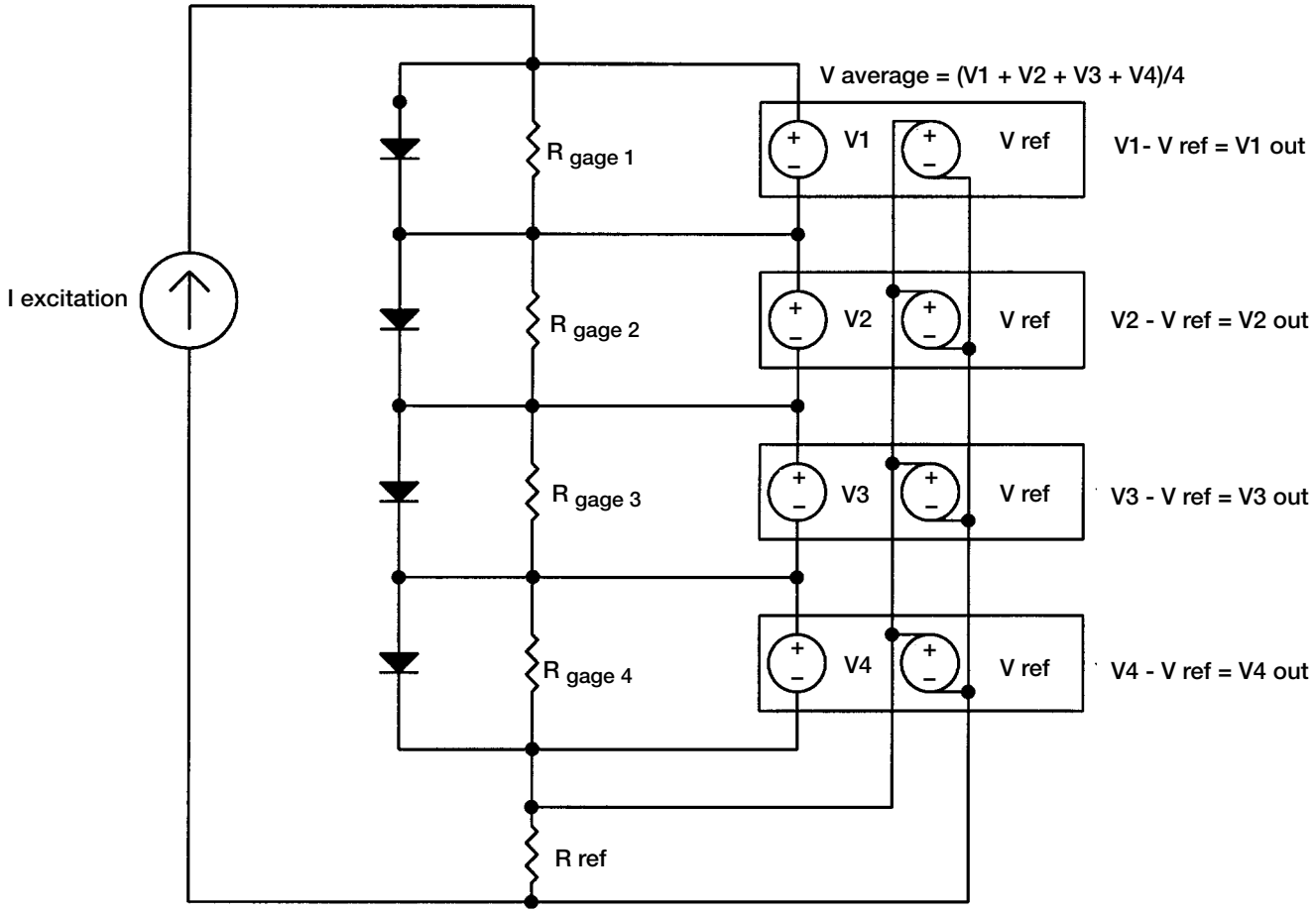

Figure 5.—Single loop arrangement for cruciform rake.

Analog Computation

Another possible arrangement is to have the measurement averaging done before the data is input to the acquisition system. Output signals from both the duct and cruciform rake could be added through a summing amplifier arrangement, divided to find their respective averages, then viewed in series opposition to determine the difference in temperature measurement. This result would then be the input to the data system, thereby reducing the errors due to digitizing each gage's signal and the associated post calculations necessary for a temperature difference measurement.

Multiple Loops With Same Reference Source

Alternatively, two regulators could be driven from the same V_{REF} source. This would provide for two current loops, one for each rake, that are referenced to the same level. This modification yields reduced errors as in the single loop configuration, but simplifies the analog averaging of each respective rake.

Circuit Modifications

The circuit of Fig. 3 could be modified to further take advantage of the Anderson loop. These improvements are shown in the highlighted boxes of Fig. 6. To reduce any induced noise to the current regulator, a capacitor should be added from the positive input of the regulator, (pin 3 of the LM10CLN), to ground.

By adding a potentiometer, P1, connected to the $2V_{REF}$ node, and connecting a series resistance, R_{OFFSET}, to the positive V_{REF} node, an offset adjustment derived from the excitation current level is possible. V_{OFFSET} is the difference between V_{REF} and the level and polarity set by the offset pot, (between 0 and $2V_{REF}$). The offset current is limited by the series resistor so that

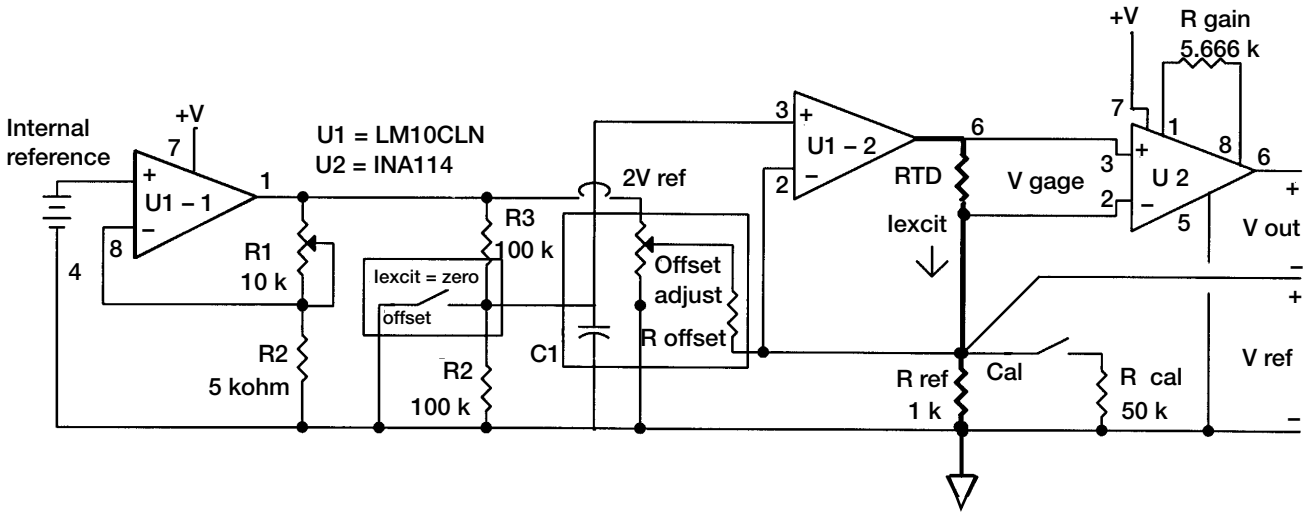

Figure 6.—Modified Anderson loop circuit.

$$\pm I_{OFFSET} = \pm V_{OFFSET} / R_{OFFSET}$$

This offset current is summed with the gage current, $I_{EXCITATION}$, to force the gage voltage, V_{RTD} to approach V_{REF}, which is the voltage drop across the reference resistor.

$$V_{RTD} = (I_{REF} + I_{OFFSET}) R_{RTD}$$

A switch which shorts out R4 if added to the circuit would cause the excitation current, $I_{excitation}$, to become zero, providing a means of observing if self generating noise was entering the circuit. Since the circuit should only react to an impedance change, any output with the switch closed would be from noise, which adds uncertainty to the measurement.

CONCLUSIONS

By utilizing the Anderson loop to condition RTD's in a wind tunnel environment, it was possible to achieve temperature measurements of a higher degree of accuracy than that obtained by thermocouples. The voltage difference method of dealing with the RTD's inherent voltage bias results in a higher sensitivity in the measurement. Resulting test data confirms that the use of the Anderson current loop to condition the RTD is an appropriate choice for accurate temperature measurements. The simplicity of the circuitry allows for easy setup, calibration, and verification of the sensor's signal.

REFERENCES

1. Meyers, C.H.: Coiled Filament Resistance Thermometers, NBS Journal of Research, Vol. 9, 1932.

2. Marsh, R.H., Selecting Thermocouples and Platinum Resistance Temperature Detectors, Journal of Control Engineering, Vol. 18, No. 11, pp. 76-77, Nov. 1971.

3. Anderson, Karl F.: Current Loop Signal Conditioning Practical Applications, NASA TM–4636, 1995.

4. Anderson, Karl F.: A Conversion of Wheatstone Bridge to Current-Loop Signal Conditioning For Strain Gages, NASA TM–104309, 1995.