NASA Technical Memorandum 107041

Ablative Material Testing for Low-Pressure, Low-Cost Rocket Engines

G. Paul Richter and Timothy D. Smith
Lewis Research Center
Cleveland, Ohio

Prepared for the
1995 32nd Combustion Subcommittee, Propulsion Systems Hazards Subcommittee, 22nd Exhaust Plume Technology Subcommittee, and 4th SPIRITS User Group Joint Meeting
sponsored by Joint Army-Navy-NASA-Air Force
Huntsville, Alabama, October 23–27, 1995

National Aeronautics and
Space Administration

ABLATIVE MATERIAL TESTING FOR LOW-PRESSURE, LOW-COST ROCKET ENGINES

G. Paul Richter and Timothy D. Smith
National Aeronautics and Space Administration
Lewis Research Center
Cleveland, Ohio 44135

ABSTRACT

The results of an experimental evaluation of ablative materials suitable for the production of light weight, low cost rocket engine combustion chambers and nozzles are presented. Ten individual specimens of four different compositions of silica cloth-reinforced phenolic resin materials were evaluated for comparative erosion in a subscale rocket engine combustion chamber. Gaseous hydrogen and gaseous oxygen were used as propellants, operating at a nominal chamber pressure of 1138 kPa (165 psia) and a nominal mixture ratio (O/F) of 3.3. These conditions were used to thermally simulate operation with RP-1 and liquid oxygen, and achieved a specimen throat gas temperature of approximately 2456 K (4420 °R). Two high-density composition materials exhibited high erosion resistance, while two low-density compositions exhibited ~6-75 times lower average erosion resistance. The results compare favorably with previous testing by NASA and provide adequate data for selection of ablatives for low pressure, low cost rocket engines.

INTRODUCTION

The increasing demand for reliable, low-cost launches of small satellites (100-300 kg)(221-662 lbs) to equatorial or polar low-Earth orbit (LEO) has led to a number of design approaches for a low-cost propulsion system to meet this demand. One approach includes the utilization of relatively inexpensive propellants such as RP-1 (processed kerosene) fuel and liquid oxygen (LOX) in a low chamber pressure, pressure-fed engine, with an uncooled combustion chamber and nozzle. The elimination of complex, high-pressure turbopumps, and avoidance of cryogenic fuels such as liquid hydrogen or liquid methane, with insulated storage tanks and transfer lines, simplifies the entire system, thus increasing reliability and lowering costs. The combination of RP-1 and LOX is also far more benign for the environment than conventional solid or hypergolic propellants.

References 1 and 2 identified plans for developing an orbital launch system consisting of a two-stage launch vehicle capable of placing payloads of approximately 227 kg (500 lbs) to 340 kg (750 lbs) into polar or equatorial LEOs. For simplicity and low cost, this system would utilize an existing off-the-shelf first-stage high thrust engine, and a second-stage, low thrust rocket engine consistent with the above approach. To address the desire for a low-cost, lightweight, uncooled combustion chamber and nozzle, Lewis Research Center conducted a conceptual design and analysis study of two RP-1/LOX propelled engines (one for sea-level testing and one for upper-stage operation) for this application. Evaluation of design options, with the goals of simplicity and low cost, led to incorporating ablative materials to fabricate part of the desired combustion chamber and nozzle.

Ablative materials are used extensively to provide sacrificial cooling (progressive endothermic decomposition of fiber-reinforced organic material and mass flow of pyrolysis gases away from the heated surface, blocking heat flux to the outer surface) in a number of liquid and solid propellant rocket engine applications. The advantages of ablative cooling include simplicity, reliability, ease of fabrication, and compatibility with deep throttling requirements. Another major advantage is the elimination of the need for expensive, complex, regenerative engine cooling systems, with high pressure pumps and tanks.

A preliminary survey was conducted of ablative materials, with emphasis on aerospace industry applications, and it was determined that a number of available low cost materials could meet the design requirements which include:

- RP-1 and LOX Propellants
- Firing Duration = 265 seconds
- Chamber Pressure = 883 kPa (128 psia)

In addition to previously tested and utilized materials (e.g. Fiberite MX2600), a number of new light-weight materials were considered for comparative evaluation. It was also determined (reference 3) that the rate of throat erosion could be minimized by utilizing an engine design which incorporates a low O/F zone in the periphery of the combustion gases, or "O/F Zoning", thus creating a lower gas temperature adjacent to the chamber wall. Selection of O/F zoning was based on two aspects. First, by selection of an O/F zone of 1.6, a cool combustion zone in the periphery of the injector will create a temperature of approximately 2444 K (4400 °R) which should keep the erosion of the ablative to a minimum without seriously affecting the overall engine performance (reference 4). Second, the velocity difference between core flow and peripheral-zone flow is less in the case of O/F zoning than it is with film cooling, thus minimizing the mixing between the two zones. Hence, one would expect better maintenance of the zone cooling influence throughout the length of the chamber. Figure 1 (reference 3) shows the effect of peripheral-zone combustion temperature on ablative throat erosion for a rocket engine with a throat diameter of 7.62 cm (3.0 in.) and operating at a chamber pressure of 690 kPa (100 psia). As can be seen, the ablative erosion rate decreases almost linearly, and the onset of erosion is delayed at the lower combustion temperatures. That experimental effort utilized nitrogen tetroxide and a blend of 50 percent unsymmetrical dimethyl-hydrazine and 50 percent hydrazine propellants. The current experimental effort utilized an existing rocket engine chamber with a design throat diameter of 2.54 cm (1.0 in.) and operated at a chamber pressure of 1138 kPa (165 psia) with gaseous hydrogen and oxygen propellants.

Erosion is also driven by the chamber pressure and gas velocity at the throat, which influence the heat transfer coefficient and heat flux. Reference 5 shows that the heat transfer coefficient is directly proportional to the chamber pressure and indirectly proportional to the throat diameter. Thus, the current experimental test results for the 2.54 cm diameter throat sample should be conservative when applied to the larger diameter conceptual engine design.

This paper will cover the rationale behind the selection of the candidate materials for comparative evaluation; the experimental test matrix selected; and the experimental test results leading to selection of a material for final fabrication. Ten throat insert samples, comprised of four different silica cloth-reinforced/phenolic resin compositions, were tested. To evaluate the candidate materials at the desired operating conditions, testing was conducted using gaseous oxygen and hydrogen propellants at an overall nominal mixture ratio of 3.3 and nominal chamber pressure of

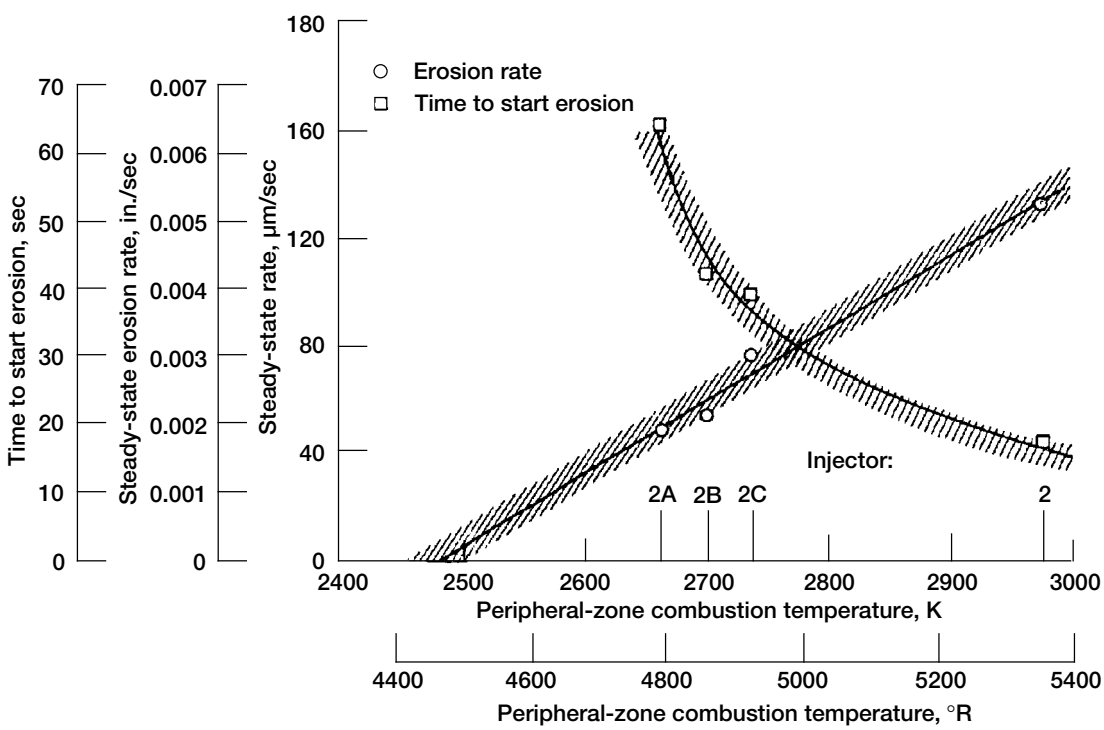

Figure 1.—Effect of peripheral-zone combustion temperature on ablative throat erosion.

1138 kPa (165 psia). This was intended to simulate the thermal conditions anticipated in the proposed design. Each test firing was conducted for progressively longer durations, with measurements of the material sample throat diameter taken after each run to determine the condition and to document the rate of material erosion and any fabric delamination for each sample. Comparisons are made for the apparent erosion (regression) rates, throat area increase, and the rate of throat area increase for the different materials.

EXPERIMENT DESCRIPTION

APPARATUS

Figure 2 is a photograph of the test hardware in place in test cell 22 of the Rocket Lab, described in reference 6, at the Lewis Research Center. The hardware for testing the candidate materials included an injector, combustion chamber barrel section, converging nozzle section, test sample, and a sample retaining plate, as shown in cross-section in Figure 3, with the 2.54 cm (1.0 in.) throat diameter test sample in place. The 5.08 cm (2.0 in.) diameter combustion chamber and convergent nozzle section were water-cooled with the sample held in place by an uncooled stainless steel plate.

The test injector design incorporated a porous sintered wire mesh faceplate through which the hydrogen was introduced and a number of small diameter oxygen injector tubes. An augmented spark torch system was provided to initiate combustion. The facility also included a water spray-cooled exhaust duct for handling the exhaust products; a programmable logic controller to actuate the valves, control the run duration, and abort the firing if a problem occurs; and a high-speed data acquisition system.

To simulate the conceptual engine's designed combustion temperature of approximately 2444 K (4400 °R), a theoretical performance analysis was conducted using the One Dimensional Equilibrium program (reference 7), based on operating at a nominal chamber pressure of 150 psia. From this analysis the desired propellant flows were determined for initial testing.

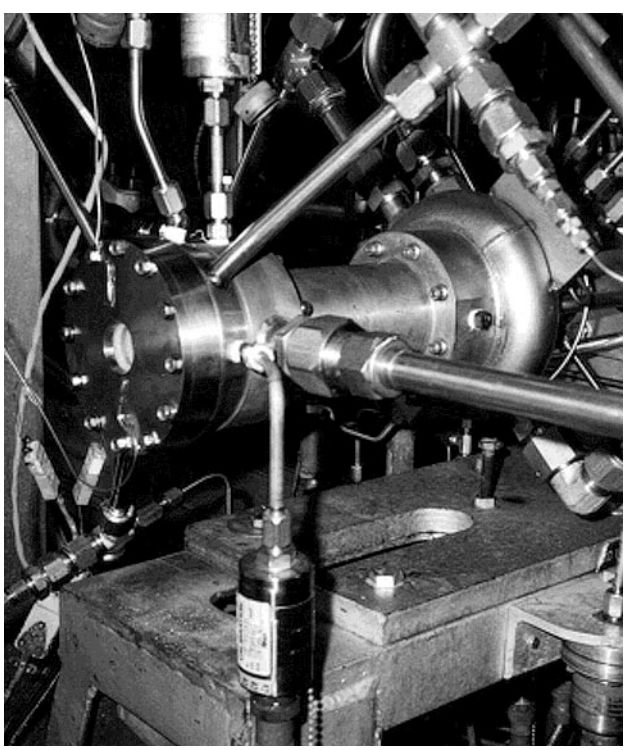

Figure 2.—Photograph of ablative test hardware.

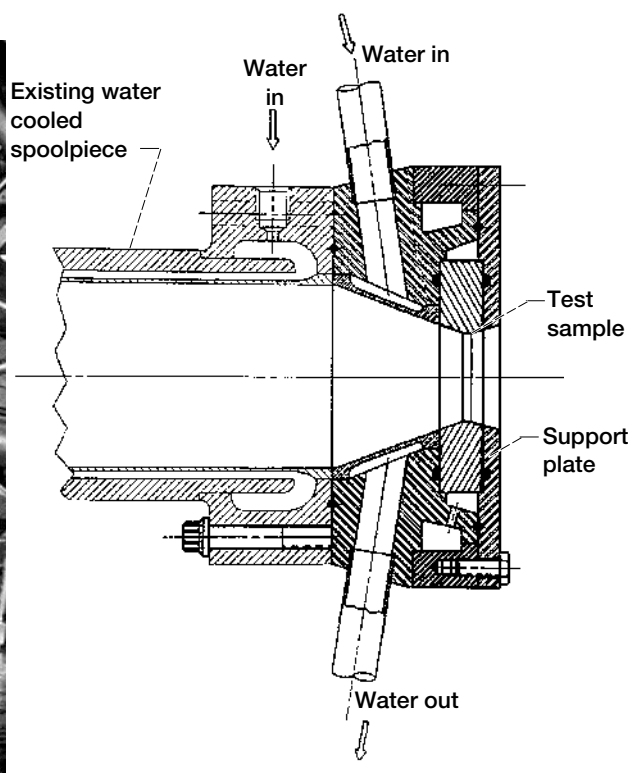

Figure 3.—Rocket engine cross section.

Nozzle	Material		Fabric orientation	Throat radius change after 150-second firing		Average char through at throat plane, percent
	Composition	Supplier's designation (a)		mil	mm	
1A	70-percent high silicon dioxide - 30-percent phenolic	MX-89	30° centerline	190	4.82	48
1B			60° centerline	165	4.19	52
1C			90° centerline	180	4.57	60
1D			1/2- by 1/2-inch (1.27- by 1.27-cm) square	175	4.44	52
1E			Rosette	235	5.97	51.2
2A	61-percent high silicon dioxide - 31-percent phenolic - silicon dioxide filler (8 percent)	MX-2600	30° centerline	[b]145	3.68	44
2B			60° centerline	150	3.81	53.5
2C			90° centerline	205	5.22	61.5
2D			1/2- by 1/2-inch (1.27- by 1.27-cm) square	190	4.82	60
3A	62-percent high silicon dioxide - 32-percent polyamide modified phenolic	MX-19	30° centerline	[b]165	4.19	44
3B			60° centerline	140	3.56	48
3C			90° centerline	250	6.35	57.5
3D			1/2- by 1/2-inch (1.27- by 1.27-cm) square	220	5.59	44
4A	80-percent high silicon dioxide - 20-percent polyamide modified phenolic	MX-87	30° centerline	[b]205	5.22	36.6
4B			60° centerline	220	5.59	52
4C			90° centerline	205	5.22	50.5
4D			1/2- by 1/2-inch (1.27- by 1.27-cm) square	215	5.46	44
4E			Rosette	[b]330	8.38	45.5
5A	67-percent silicon dioxide - 3-percent chrome salt - 30 percent phenolic	MXS 141	30° centerline	250	6.35	47.2
5B			60° centerline	240	6.10	52.0
5C			90° centerline	245	6.23	56.0
5D			1/2- by 1/2-inch (1.27- by 1.27-cm) square	245	6.23	48.8
5E			Rosette	315	8.00	48.0
6A	70-percent high silicon dioxide - 30-percent modified phenolic	4S-4161	30° centerline	200	5.08	42.5
6B			60° centerline	175	4.44	52.0
6C			90° centerline	190	4.82	53.6
6D			1/2- by 1/2-inch (1.27- by 1.27-cm) square	185	4.70	48.8
7A	60-percent high silicon dioxide - 40-percent elastomeric phenyl silane	FM-201S	30° centerline	[b]225	5.72	44.0
7B			60° centerline	225	5.72	51.0
7C			90° centerline	255	6.47	53.5
7E			Rosette	[b,c]450	11.4	52.0
8B	70-percent high silicon dioxide - 30-percent high-temperature phenolic	MXS-115	60° centerline	200	5.08	60
8C			90° centerline	250	6.35	64
9C	70-percent quartz - 30-percent polyimide	--------	90° centerline	130	3.30	64
10E	70-percent quartz - 30-percent phenolic	MX-5091	Rosette	220	5.59	54

[a]All nozzles fabricated by Edler Industries.
[b]Fabric delamination.
[c]After 110-sec firing.

Figure 4.—Reference material—previous NASA testing. This table taken from reference 8.

TEST SAMPLES

The selection of candidate materials to be tested was based primarily on the documented performance of existing materials, which included the rate of erosion (regression) and the “char through” caused by resin decomposition and flow of pyrolysis gases through the char layer. The availability and cost of possible materials was also considered during the selection process.

Based on an investigation of previously tested ablative materials (references 3 and 8 thru 15), shown in Figure 4, and a review of the application of Fiberite MX2600 material (reference 16), as shown in Figure 5(a) and 5(b), it was determined that a silica cloth-reinforced/phenolic resin composition should provide the ablative characteristics desired for the conceptual engine application. Quartz cloth-reinforced/ phenolic resin compositions were considered but determined to be prohibitively costly.

Finally, the investigation suggested that a cloth fabric orientation of 60° with respect to the chamber and nozzle center line produced a lower level of erosion than other fabric orientations, as shown on Figure 6, (reference 8).

Four(4) candidates were selected for investigation of cost, availability, and performance characteristics. Two materials (Fiberite MX-2600-LDC and MXS-385-LD) incorporated hollow microspheres in the phenolic resin to produce low-density compositions; one high-density composition (Fiberite MX-2600) included a silicon dioxide powder filler in the resin; and the fourth was a proprietary (Utah Rocketry) silica cloth/phenolic resin composition, high-density material. Table 1 shows the materials selected. The low-density compositions were included to provide the possibility of a weight savings of approximately 40% for the final product. Figure 7 shows the dimensions of the test samples with the desired cloth fabric orientation.

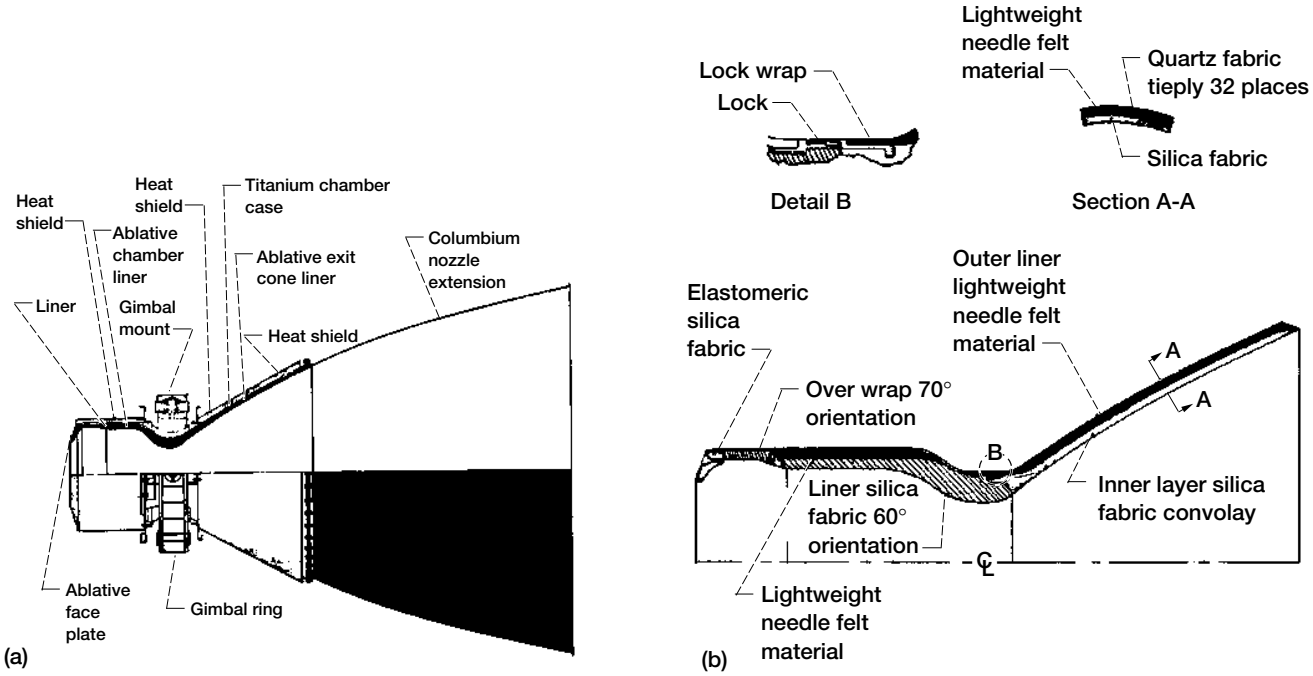

Figure 5.—TRW lunar module descent engine. (a) Thrust chamber assembly. (b) Lightweight chamber liner. (Reference 16).

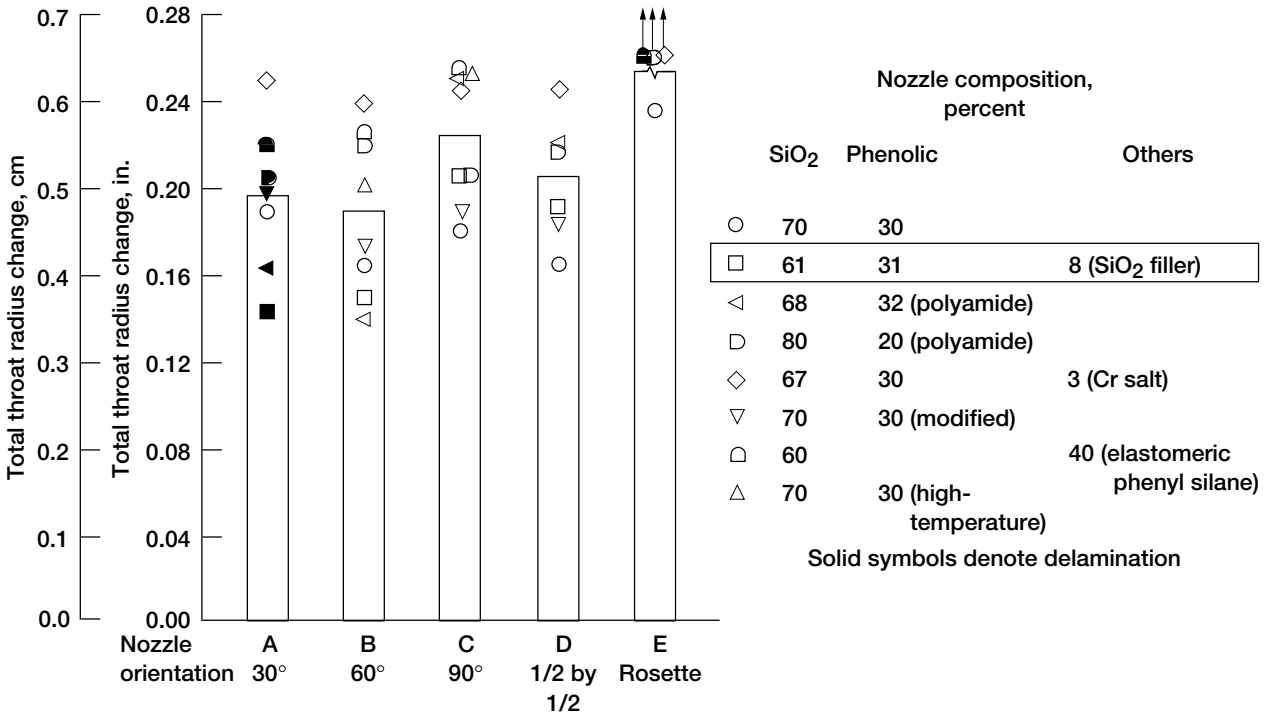

Figure 6.—Erosion vs. fabric orientation.

TABLE 1.—ABLATIVE MATERIAL SAMPLES

Supplier	Designation	Composition	Density, gm/cm^3	Remarks
1 ICI fiberite	MX 2600	59-63% silica cloth 29-33% phenolic resin ~8% silica powder	1.72	High mold pressure (1000 psi) laminate
2 ICI fiberite	MX 2600 LDC	45-51% silica cloth 30-36% phenolic resin ~9% ceramic microspheres	1.1	Low mold pressure (100 psi) laminate
3 ICI fiberite	MXS 385 LD	32-42% silica cloth 25-33% phenolic resin 33-35% filler (ceramic microballoons & elastomer)	.90	Low mold pressure (50 psi) laminate
4 Utah Rocketry	"SIL/PHEN" (NASA designation)	Proprietary	1.88	New composition

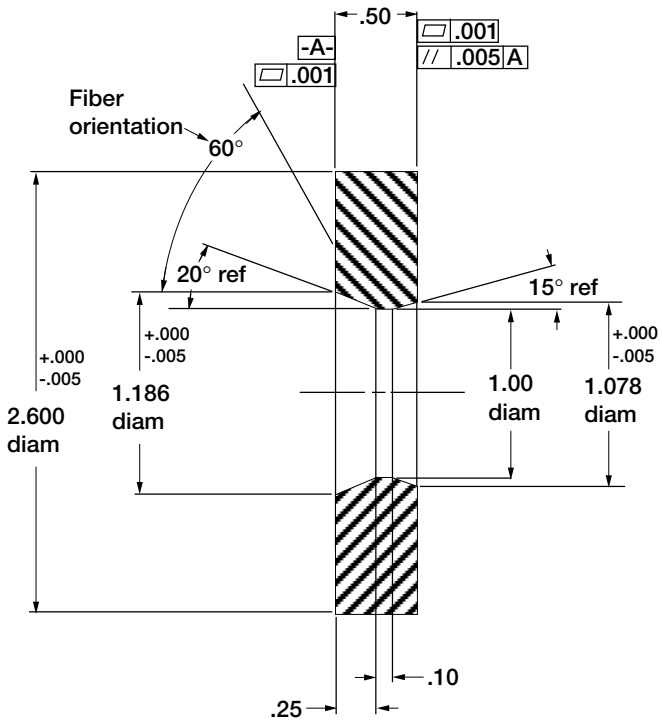

Figure 7.—Test sample cross section. (All dimensions in inches.)

TEST PROCEDURE

The procedures used in this test program were established to obtain comparative, progressive erosion data at a single operating condition for all selected ablative material samples. Figure 8 shows a sample data sheet (including the matrix of run durations) utilized for recording dimensional and operating data for each run. These data were used to monitor the amount of erosion of the sample and the degree to which the operating conditions (chamber pressure and mixture ratio) remained constant. Each sample was measured with a digital, electronic bore gage prior to any hot firing, to determine the initial throat diameter. The operating conditions for the combustion chamber, and the test firing duration were programmed into the test controller prior to each test run, and all operation and data acquisition was fully automatic from test initiation.

Following each hot firing, the sample throat was measured using the same bore gage and taking multiple readings around the inside circumference of the throat. The condition of the test sample was evaluated visually, and documented photographically. Each test run was also documented by high-speed photography and on videotape. The most valuable observation after each test run was the visual inspection of the condition of each sample. This inspection, along with the diametral measurement, was used to determine whether or not to continue the test matrix. Using this technique consistently by the same investigator during the test program permitted a reasonable comparison of the characteristics of the selected materials. Figure 9 shows the condition of one sample of low-density MXS-385-LD material, and illustrates the difficulty in obtaining the absolute correctness of the throat diameter after this test run. This figure also shows the “streaking” (possibly caused by nonuniform flow in the oxygen tubes in the injector) of the combustion products at the 7:00 and 10:00 o’clock positions (looking upstream) which contributed to the irregular erosion pattern.

To more accurately document the change in the test sample throat diameter after the final hot firing, each sample was mounted in a Computer Programmable Optical Comparator (Figure 10) and an average diameter was determined from 20 readings around the inside circumference of the throat. These data were used to determine the final throat area of each sample.

Ablative sample - test results						
Test date	Run no.	Sample material	Run duration (sec.)	Throat diameter (in.) Initial	Throat diameter (in.) Post-run	Operating parameters
4/20/95	34	U.R. SIL/PHEN ①	1	.9984	1.00355	Pc = 174.0 psia WO = .404 WF = .121 O/F = 3.34
"	35	"	3	1.00355	1.00820 max 1.00725 min	Pc = 163.7 psia WO = .383 WF = .116 O/F = 3.30
"	36	"	10	1.00820 1.00725	1.01510 max 1.01240 min	Pc = 167.9 psia WO = .394 WF = .118 O/F = 3.34
"	37	"	30	1.01510 1.01240	1.0300 max 1.0129 min	Pc = 161.3 psia WO = .383 WF = .115 O/F = 3.33
"	38	"	60	1.0300 1.0129	1.0401 max 1.0156 min	Pc = 160.1 psia WO = .385 WF = .116 O/F = 3.32
"	39	"	60	1.0401 1.0156	1.05355 max 1.02385 min	Pc = 159.1 psia WO = .386 WF = .117 O/F = 3.30
					1.0058 - Optical comparator data	

Final throat gas temperature ≈ 4294 °R

Figure 8.—Sample data sheet.

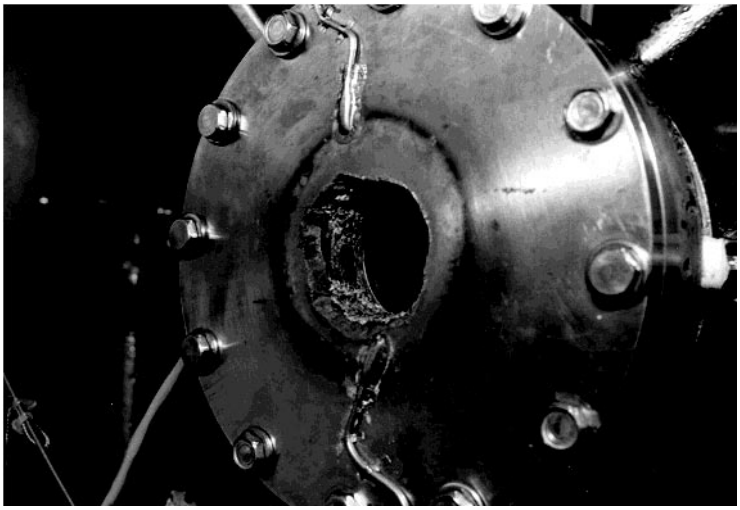

Figure 9.—Photo of sample MXS385 - LD material after firing.

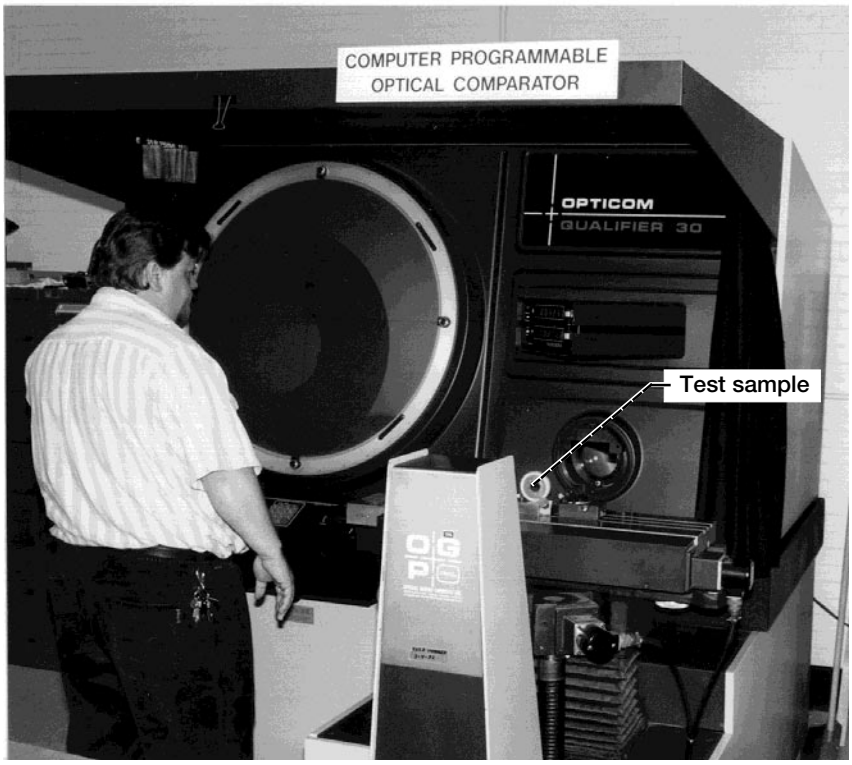

Figure 10.—Optical measurement of test sample.

The Post-Run diameters shown were the bore gage measurements mentioned earlier, and were used only for preliminary determination of throat condition and approximate operating gas temperature. As shown on Figure 8, the final throat gas temperature for this series of runs was approximately 2386 K (4294 °R). All gas temperatures were determined using techniques outlined in reference 7. The average final gas temperature, for all test runs, was approximately 2456 K (4420 °R). This condition was the result of higher chamber pressures and O/F's than initially established but was acceptable for the purpose of comparing the test samples. The temperature was held constant within approximately $\pm$3% for all test runs.

The final analysis of the test data included the determination of the accumulated change in the throat diameter, ΔD (mm)(in.) from which the erosion, or regression rate, R (mm/sec or mil/sec), the throat area increase ΔA(%), the rate of area increase, ΔA/T (%/sec), and the throat gas temperature could be determined.

Figure 11 shows a sample analysis sheet for sample U.R. SIL/PHEN(1), where the results of the Optical Comparator readings were used to determine the final change in throat diameter and area, and the rate of area increase.

Analysis of Sample: U.R. Silica/Phenolic①
(Tested 4/20/95)

Run #	Duration, sec	Cum. duration, T, (sec)	ΔD, in.	ΔD/T, in./sec	Erosion rate, mil/sec
34	1	1	.00515	.00515	5.15
35	3	4	.00933	.00233	2.33
36	10	14	.01535	.00110	1.10
37	30	44	.02305	.000524	.524
38	60	104	.02945	.000283	.283
39	60	164	.0403	.000246	.246
			.0074	.000045	.045

Analysis of Change in Throat Area

$$\frac{A_2}{A_1} \propto \frac{D_2^2}{D_1^2} \qquad D_1 = .9984 \text{ in.} \qquad D_2 = 1.0058 \text{ in. (average)}$$

$$\frac{A_2}{A_1} \quad \frac{(1.0058)^2}{(.9984)^2} = \frac{1.01163}{.996803} = 1.01488$$

$$\therefore A_2 = 1.01488\ A_1$$

=> 1.49% increase

and 1.49%/164 sec =

0.009% per sec Δ A/T

Figure 11.—Sample analysis sheet.

RESULTS AND DISCUSSION

The objective of these tests was to evaluate the comparative erosion characteristics of several ablative materials at a specific operating condition for selection and application to the design of a new rocket engine. Table 2 shows the matrix of comparative test results for the selected materials, which are summarized as follows:

TABLE 2.—ABLATIVE MATERIAL TEST RESULTS

Sample material	Total test time, T, sec	Change in diameter, ΔD		Regression rate, R		Area increase, ΔA, percent	Rate of area increase, ΔA/T, percent/sec	Average combustion temperature, °R
		mm	in.	mm/sec	mil/sec			
MX2600②	104	0.470	0.0185	0.452×10^{-2}	0.178	3.74	0.0360	4562
MX2600③	120	.986	.0388	.822	.323	7.94	.066	4338
MX2600-LDC①	31	1.864	0.0734	6.013	2.368	15.22	0.491	4483
MX2600-LDC②	35	.889	.0350	2.54	1.00	7.12	.203	4579
MX2600-LDC③	34	1.298	.0511	3.818	1.503	10.47	.308	4404
MXS385-LD①	34	1.234	0.0486	3.629	1.429	9.95	0.293	N/A
MXS385-LD②	34	1.438	.0566	4.229	1.665	11.64	.342	4442
U.R. SIL/PHEN①	164	0.188	.0074	0.115	0.045	1.49	0.009	4294
U.R. SIL/PHEN②	164	.028	.0011	.017	.007	.22	.0013	4308
U.R. SIL/PHEN③	164	.056	.0022	.034	.013	.44	.0026	4372

Notes:
1. All final results were based on measurements of effective diameter made on Optical Comparator.
2. All samples were subject to “streaking” of the combustion products within the test chamber, causing irregular erosion of the ablative materials.
3. The configuration of the test chamber allowed the ablative samples to delaminate to some degree because of the lack of support on the downstream side of the sample.

1. A low-cost, high-density composition of silica cloth and phenolic resin with a silicon dioxide powder filler (Fiberite MX-2600), previously utilized for the Lunar Module descent engine, provided erosion resistance acceptable for the intended application (~0.25 mil/sec).

2. Both of the low-density compositions eroded much more rapidly (~6-75 times) than the high-density compositions and exhibited a greater degree of delamination of the fabric layers.

3. A new high-density material of a proprietary silica cloth/phenolic resin composition provided the best erosion resistance of the samples tested (~0.02 mil/sec). Figure 12(a) shows test sample U.R. SIL/PHEN③ prior to test firing, and Figure 12(b) shows the same sample after 164 seconds accumulated operation.

4. The use of "inter-test" inspections provided a basis for whether or not to continue each test series, which resulted in the variations in the total test times shown on Table 2. The shorter total test times for the low-density materials resulted from these inspections, in which the rapid deterioration was evident. The longer total test times for the U.R. SIL/PHEN samples were the results of the observation of lower deterioration, allowing for longer duration testing.

5. The selection of the 60° fabric orientation in the samples resulted in erosion characteristics consistent with earlier NASA investigations utilizing nitrogen tetroxide and a blend of 50-percent unsymmetrical dimethyl-hydrazine and 50-percent hydrazine propellants. Figure 13 shows the comparison of the current test data with the spread of previous data from reference 8.

6. Although the operating characterisitics of the test facility and the number of ablative material samples were limited, the use of consistent data acquisition techniques provided sufficient data for comparison of the erosion characteristics of these materials.

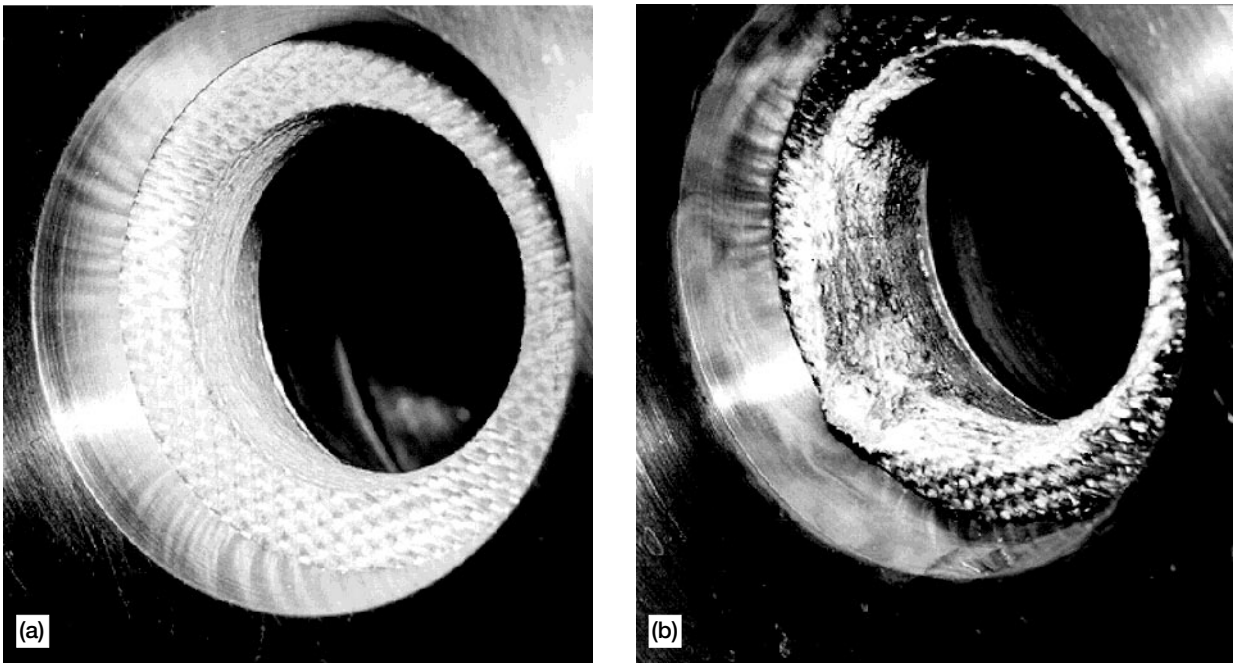

Figure 12.—(a) Photo of test sample U.R. SIL/PHEN ③ before firing. (b) Photo of test sample U.R. SIL/PHEN ③ after 164 seconds of firing.

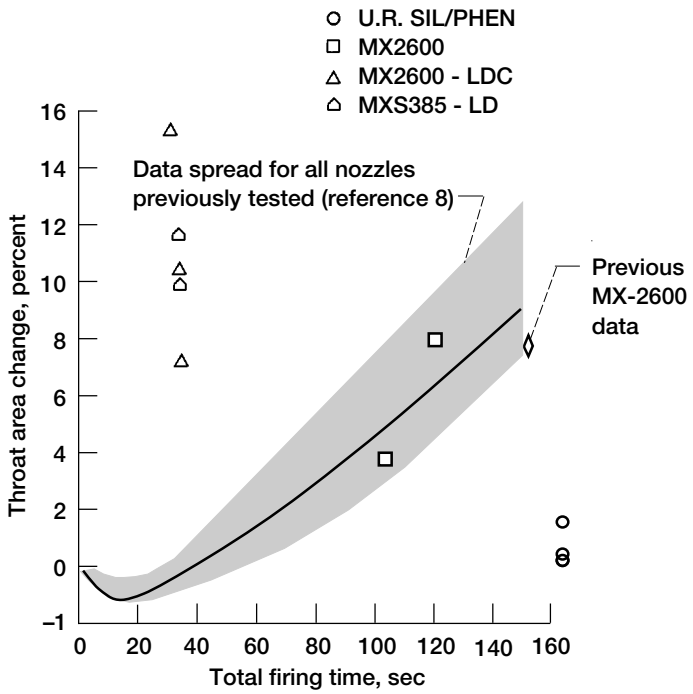

Figure 13.—Test data comparison with previous NASA testing.

As noted on Table 2, there were factors influencing the accuracy, on an absolute basis, of the test results. The use of the Optical Comparator to determine the final throat diameter provided a more accurate measure than bore gage readings for comparison purposes. The final condition of the samples was further exacerbated by the lack of full support on the downstream face of the sample, allowing some degree of delamination. This delamination generally occurred in the areas where "streaking" was evident.

A final comparison of these materials, drawn from these results, shows that the high-density composition materials are more desirable than the low-density materials for the proposed engine application, with a long duration firing time (approximately 300 seconds).

CONCLUDING REMARKS

An investigation was conducted to evaluate the comparative erosion characteristics of silica cloth-reinforced/phenolic resin materials for application to the combustion chamber and nozzle of a low-pressure liquid oxygen/RP-1 propelled rocket engine. A survey of possible candidate materials was conducted, yielding four different composition (two low-density and two high-density) materials for further evaluation. Experimental testing was performed in an existing test facility utilizing gaseous oxygen and hydrogen propellants at an O/F scheduled to simulate the thermal environment of oxygen/RP-1. Results of this evaluation show that the high-density, silica cloth-reinforced/phenolic resin composition materials tested will provide acceptable erosion characteristics for the intended application.

ACKNOWLEDGEMENTS

The authors would like to acknowledge the input from Mr. Joel Pedlikin of Pac Astro in providing the design requirements for the conceptual rocket engines. We would also like to thank Mr. Nick DiMeo of ICI Fiberite, and Mr.Dan Mozer of Utah Rocketry for information on material properties and for fabricating the test samples evaluated in this effort.

REFERENCES

1. PacAstro to Begin Building Suborbital Rocket This Summer, Defense Daily, June 14,1994, pg. 407.
2. Air Force to Help Fund PacAstro Rocket Development, Space News, Feb. 6, 1995, pg. 19.
3. Winter, Jerry M., Pavli, Albert J., and Shinn, Arthur M. Jr.: Design and Evaluation of an Oxidant-Fuel-Ratio-Zoned Rocket Injector for High Performance and Ablative Engine. NASA TN D–6918, 1972.
4. Masters, Philip A., Armstrong, Elizabeth A., and Price, Harold G.: High-Pressure Calorimeter Chamber Tests for Liquid Oxygen/Kerosene (LOX/RP-1) Rocket Combustion. NASA TP–2862, 1988.
5. Bartz, D.R.: A Simple Equation for Rapid Estimation of Rocket Nozzle Convective Heat Transfer Coefficients. Jet Propulsion, vol. 27, no. 1, January 1957, pp. 49–51.
6. Green, James M.: A Versatile Rocket Engine Hot Gas Facility, AIAA–94–2487 NASA Contractor Report 195339, June, 1993.
7. Gordon, Sanford and McBride, Bonnie J.: Finite Area Combustor Theoretical Rocket Performance, NASA TM–100785, April, 1988.
8. Peterson, Donald A., Winter, Jerry M., and Shinn, Arthur M. Jr.: Rocket Engine Evaluation of Erosion and Char as Functions of Fabric orientation for Silica-Reinforced Nozzle Materials. NASA TM X–1721, 1969.
9. Shinn, Arthur M. Jr.: Experimental Evaluation of Six Ablative-Material Thrust Chambers as Components of Storable-Propellant Rocket Engines. NASA TN D–3945, 1967.
10. Salmi, Reino J., Wong, Alfred, and Rollbuhler, Ralph J.: Experimental Evaluation of Various Nonmetallic Ablative Materials as Nozzle Sections of Hydrogen-Oxygen Rocket Engine. NASA TN D–3258, 1966.
11. Winter, Jerry M. and Peterson, Donald A.: Experimental Evaluation of 7.82-inch (19.8-cm) Diameter Throat Inserts in a Storable-Propellant Rocket Engine. NASA TM X–1463, 1968.
12. Winter, Jerry M., Peterson, Donald A., Shinn, Arthur M. Jr., and Pavli, Albert J.: Development and Testing of Ablative Rocket Engine With Selected 7.62-Centimeter (3.0-in.) Diameter Throat Inserts. NASA TM X–2315, 1971.
13. Pavli, A.J.: Experimental Evaluation of Several Advanced Ablative Materials as Nozzle Sections of a Storable-Propellant Rocket Engine. NASA TM X–1559, 1968.
14. Peterson, Donald A. and Meyer, Carl: Experimental Evaluation of Several Ablative Materials as Nozzle Sections of a Storable-Propellant Rocket Engine. NASA TM X–1223, 1966.
15. NASA Space Vehicle Design Criteria (Chemical Propulsion) - Liquid Rocket Engine Self-Cooled Combustion Chambers. NASA SP–8124, 1977.
16. Characteristics of the TRW LUNAR MODULE DESCENT ENGINE, Volume I(Revised). TRW Report No. 01827–6119–TOOO, 1969.

REPORT DOCUMENTATION PAGE

Form Approved
OMB No. 0704-0188

Public reporting burden for this collection of information is estimated to average 1 hour per response, including the time for reviewing instructions, searching existing data sources, gathering and maintaining the data needed, and completing and reviewing the collection of information. Send comments regarding this burden estimate or any other aspect of this collection of information, including suggestions for reducing this burden, to Washington Headquarters Services, Directorate for Information Operations and Reports, 1215 Jefferson Davis Highway, Suite 1204, Arlington, VA 22202-4302, and to the Office of Management and Budget, Paperwork Reduction Project (0704-0188), Washington, DC 20503.

1. AGENCY USE ONLY (*Leave blank*)

2. REPORT DATE
October 1995

3. REPORT TYPE AND DATES COVERED
Technical Memorandum

4. TITLE AND SUBTITLE
Ablative Material Testing for Low-Pressure, Low-Cost Rocket Engines

5. FUNDING NUMBERS
WU–242–50–0A

6. AUTHOR(S)
G. Paul Richter and Timothy D. Smith

7. PERFORMING ORGANIZATION NAME(S) AND ADDRESS(ES)
National Aeronautics and Space Administration
Lewis Research Center
Cleveland, Ohio 44135–3191

8. PERFORMING ORGANIZATION REPORT NUMBER
E–9869

9. SPONSORING/MONITORING AGENCY NAME(S) AND ADDRESS(ES)
National Aeronautics and Space Administration
Washington, D.C. 20546–0001

10. SPONSORING/MONITORING AGENCY REPORT NUMBER
NASA TM–107041

11. SUPPLEMENTARY NOTES
Prepared for the 1995 32nd Combustion Subcommittee; Propulsion Systems Hazards Subcommittee, 22nd Exhaust Plume Technology Subcommittee, and 4th SPIRITS User Group Joint Meeting, sponsored by Joint Army-Navy-NASA-Air Force, Huntsville, Alabama, October 23–27, 1995. Responsible person, G. Paul Richter, organization code 5320, (216) 433–7537.

12a. DISTRIBUTION/AVAILABILITY STATEMENT
Unclassified - Unlimited
Subject Category 20

This publication is available from the NASA Center for Aerospace Information, (301) 621–0390.

12b. DISTRIBUTION CODE

13. ABSTRACT ***(Maximum 200 words)***
The results of an experimental evaluation of ablative materials suitable for the production of light weight, low cost rocket engine combustion chambers and nozzles are presented. Ten individual specimens of four different compositions of silica cloth-reinforced phenolic resin materials were evaluated for comparative erosion in a subscale rocket engine combustion chamber. Gaseous hydrogen and gaseous oxygen were used as propellants, operating at a nominal chamber pressure of 1138 kPa (165 psia) and a nominal mixture ratio (O/F) of 3.3. These conditions were used to thermally simulate operation with RP-1 and liquid oxygen, and achieved a specimen throat gas temperature of approximately 2456 K (4420 °R). Two high-density composition materials exhibited high erosion resistance, while two low-density compositions exhibited ~6-75 times lower average erosion resistance. The results compare favorably with previous testing by NASA and provide adequate data for selection of ablatives for low pressure, low cost rocket engines.

14. SUBJECT TERMS
Ablative materials; Erosion resistance; Silica-cloth Phenolic compositions

15. NUMBER OF PAGES
15

16. PRICE CODE
A03

17. SECURITY CLASSIFICATION OF REPORT
Unclassified

18. SECURITY CLASSIFICATION OF THIS PAGE
Unclassified

19. SECURITY CLASSIFICATION OF ABSTRACT
Unclassified

20. LIMITATION OF ABSTRACT