NASA/TM—2005-213347 AIAA–2003–4867

Development of the NEXT Power Processing Unit

Thomas K. Phelps, Steve Wiseman, David S. Komm, and Thomas Bond
Boeing Electron Dynamic Devices, Inc., Torrance, California

Luis R. Piñero
Glenn Research Center, Cleveland, Ohio

March 2005

The NASA STI Program Office . . . in Profile

Since its founding, NASA has been dedicated to the advancement of aeronautics and space science. The NASA Scientific and Technical Information (STI) Program Office plays a key part in helping NASA maintain this important role.

The NASA STI Program Office is operated by Langley Research Center, the Lead Center for NASA's scientific and technical information. The NASA STI Program Office provides access to the NASA STI Database, the largest collection of aeronautical and space science STI in the world. The Program Office is also NASA's institutional mechanism for disseminating the results of its research and development activities. These results are published by NASA in the NASA STI Report Series, which includes the following report types:

- TECHNICAL PUBLICATION. Reports of completed research or a major significant phase of research that present the results of NASA programs and include extensive data or theoretical analysis. Includes compilations of significant scientific and technical data and information deemed to be of continuing reference value. NASA's counterpart of peer-reviewed formal professional papers but has less stringent limitations on manuscript length and extent of graphic presentations.

- TECHNICAL MEMORANDUM. Scientific and technical findings that are preliminary or of specialized interest, e.g., quick release reports, working papers, and bibliographies that contain minimal annotation. Does not contain extensive analysis.

- CONTRACTOR REPORT. Scientific and technical findings by NASA-sponsored contractors and grantees.

- CONFERENCE PUBLICATION. Collected papers from scientific and technical conferences, symposia, seminars, or other meetings sponsored or cosponsored by NASA.

- SPECIAL PUBLICATION. Scientific, technical, or historical information from NASA programs, projects, and missions, often concerned with subjects having substantial public interest.

- TECHNICAL TRANSLATION. English-language translations of foreign scientific and technical material pertinent to NASA's mission.

Specialized services that complement the STI Program Office's diverse offerings include creating custom thesauri, building customized databases, organizing and publishing research results . . . even providing videos.

For more information about the NASA STI Program Office, see the following:

- Access the NASA STI Program Home Page at ***http://www.sti.nasa.gov***

- E-mail your question via the Internet to help@sti.nasa.gov

- Fax your question to the NASA Access Help Desk at 301–621–0134

- Telephone the NASA Access Help Desk at 301–621–0390

- Write to:
  NASA Access Help Desk
  NASA Center for AeroSpace Information
  7121 Standard Drive
  Hanover, MD 21076

NASA/TM—2005-213347 AIAA–2003–4867

Development of the NEXT Power Processing Unit

Thomas K. Phelps, Steve Wiseman, David S. Komm, and Thomas Bond
Boeing Electron Dynamic Devices, Inc., Torrance, California

Luis R. Piñero
Glenn Research Center, Cleveland, Ohio

Prepared for the
39th Joint Propulsion Conference and Exhibit
cosponsored by the AIAA, ASME, SAE, and ASEE
Huntsville, Alabama, July 20–23, 2003

National Aeronautics and
Space Administration

Glenn Research Center

March 2005

Available from

NASA Center for Aerospace Information
7121 Standard Drive
Hanover, MD 21076

National Technical Information Service
5285 Port Royal Road
Springfield, VA 22100

Available electronically at http://gltrs.grc.nasa.gov

DEVELOPMENT OF THE NEXT POWER PROCESSING UNIT

Thomas K. Phelps, Steve Wiseman, David S. Komm, and Thomas Bond
Boeing Electron Dynamic Devices, Inc.
Torrance, California 90505

Luis R. Piñero
National Aeronautics and Space Administration
Glenn Research Center
Cleveland, Ohio 44135

ABSTRACT

Boeing Electron Dynamic Devices, Inc. (EDD) has designed and fabricated a breadboard version of a 6-kW power processing unit (PPU) for gridded ion thrusters. This breadboard PPU will be integrated with an engineering model 40-cm ion engine designed and tested at GRC. The results of our tests using resistive loads are reported in this paper. The PPU demonstrated efficiencies to date are higher than 95% for the beam supply and higher than 92% for the discharge supply at full power. Overall PPU efficiency is greater than 94% at full throttle settings.

INTRODUCTION

The Next Generation Ion (NGI) Engine Technology Project is a technology development project within the In-Space Propulsion Technology Program managed by Marshall Space Flight Center (MSFC). The primary objective of NGI is to significantly increase performance for primary propulsion to planetary bodies by leveraging NASA's very successful ion propulsion program for low-thrust applications. To accomplish this objective, NASA Headquarters selected Glenn Research Center to develop NASA's Evolutionary Xenon Thruster (NEXT) under the NGI Engine Technology NRA for ground demonstration and life test with application to future missions. Issues of interest are integration of ion propulsion elements and critical interfaces, system lifetime, characterization of system performance, and operation optimization.

The NEXT program will develop and verify an Electric Propulsion System (EPS) that has performance and interface characteristics and capabilities to be considered by mission planners for use in the 2006 timeframe. In addition, NEXT will advance the component technologies beyond the state of the art (SOA) which is currently deemed to be NASA's SEP Technology Applications Readiness (NSTAR) EP system flown on the Deep Space 1 (DS-1) mission.

As part of the NEXT Program, EDD is under contract[1] to NASA Glenn Research Center (GRC) for the design and fabrication of a 6-kW power processing unit (PPU). We are currently completing Phase 1 of a two-phase program, in which we have designed and fabricated a breadboard unit. We will translate the design into an engineering model in Phase 2. Both PPUs will be integrated with an engineering model 40-cm ion engine at the end of each phase. This paper reports on the results of the breadboard testing to date.

THE NEXT PROJECT POWER PROCESSING UNIT

Figure 1 illustrates a typical ion thruster PPU. The PPU contains six (6) power supplies required to operate the thruster. The beam and accelerator supplies provide high voltages to accelerate the ions. The discharge supply provides current to the discharge cathode to ionize the xenon propellant. The neutralizer supply provides current to the neutralizer keeper to ionize and provide a "plasma bridge" for electrons to neutralize the ion beam. The heater supplies run the cathode heaters to raise the cathodes to emission temperature for ignition. Finally the PPU incorporates a "housekeeping" supply for internal PPU activities such as command and control, clock signals, telemetries, fault protection, etc.

Relevant electrical specifications for the PPU are listed in Table 1 along with the comparable values for NSTAR. The NEXT PPU runs from a generic high voltage bus operating over the range of 80 to 160 V DC

that furnishes power for all the supplies except the housekeeping supply. The latter operates from a generic low voltage bus operating over the range of 22 to 34 VDC.

Each power supply output can be commanded on and adjusted individually to a given setpoint. Table 2 is the formal throttle table for the NEXT engine consisting of 31 settings ranging from a total power of approximately 1 to 6 kW. This allows throttling the 40 cm ion engine between 50 and 209 mN thrust[2]. This throttle capability allows the propulsion system to match its output to the available solar array power, which declines with distance from the Sun.

In an ion thruster PPU, the beam or screen supply design is critical to obtain high efficiency and low mass since up to 92 percent of the power is processed by this converter. A modular approach consisting of six 1.1 kW modules operating in parallel to supply power to the engine was chosen for this design. Five modules would be sufficient to run the NEXT thruster, but we elected to include a sixth module in the PPU to allow for additional power processing capacity and flexibility for future thruster development. Additional beam supply modules can be paralleled to further increase the power capacity of the beam supply as required. These modules use a dual-bridge phase-modulated / pulse-width-modulated topology for low switching losses and performance over a wide input/output voltage range. Efficiencies in excess of 96% were previously measured for an individual module[3]. Measurements on the complete beam supply demonstrated higher than 95% efficiency as shown in Figure 2. The breadboard beam modules weigh 2.45 kg, and a photograph of one of the modules is shown in Figure 3.

The other power supplies in the PPU use the same topologies as in the NSTAR PPU[4]. As shown in Table 1, some changes in the output specifications were required to operate the NEXT engine. Better MOSFETs and new gate drive circuits were used to improve efficiency and to simplify the design. The switching frequency was increased to 50 kHz to reduce the mass of the power transformers and the input and output filters.

The discharge supply is the other power converter in the PPU that processes a considerable amount of power. This supply required a 71% increase in output current and power compared to NSTAR. Figure 4 shows the efficiency of this supply as a function of input voltage for several power levels. As can be seen, this converter runs as high as 92% efficiency.

With the exception of the beam supply modules, the breadboard PPU was constructed with typical point-to-point wiring on copper-clad perforated board. Because the beam supply consists of multiple identical modules, printed wiring boards (PWBs) were designed for use with leaded components. The beam supply was then constructed by fabricating a "card cage" to hold the individual beam modules. This approach allowed the beam supply to be constructed and tested in parallel with the rest of the PPU. The complete breadboard PPU is shown in Figure 5: The beam supply is the top half of the PPU and the bottom half contains all the other supplies including the housekeeping and the input filter.

Gross overall PPU efficiency for various settings from the throttle table are shown in Figure 6. (Gross efficiency is defined as total electrical power output from all supplies ÷ total electrical power input from both busses.) As can be seen, efficiency at full power, 6.1 kW, (throttle table setting #30) is greater than 94%, and at half power, 3.2 kW (throttle table setting #15), is still greater than 92%. Efficiency begins to fall off below half power as the beam supply is not operating in it's most efficient mode. We intend to address this in Phase 2 by individually commanding the modules on and off. In this fashion only as many modules as are necessary to process the power will be operated.

Typical turn-on transients are shown in Figure 7. Timing is adjusted such that the accelerator supply turns on first in about 200 msec followed by the beam supply which is ramped up over about 300 msec. Complete turn on takes about 400 msec. A re-cycle transient is shown in Figure 8. During the recycle, the discharge current is reduced to a pre-set "cut-back" value (approximately 8 A in the figure), the supplies are commanded on again, and the discharge current slowly brought back up over a couple of seconds after the beam supply comes on.

As part of the Phase 1 effort the PPU will be integrated with an engineering model 40-cm engine and a breadboard propellant management system at GRC. Performance will be verified for the complete throttle table and input voltage range. In addition, issues such as turn-on transients and high-voltage recycles will be investigated.

PLANS FOR PHASE 2

As mentioned previously, the NEXT PPU development is a two-phased program. The primary emphasis during Phase 2 will be to fabricate an engineering model (EM) PPU which will translate the existing

design of the breadboard unit into a near flight-like thermal and mechanical configuration. Like all EDD flight units, the EM PPU will be fabricated with surface mount components. We anticipate that this will reduce the mass of individual beam modules to less than 2 kg each. The mass of the entire PPU is estimated to be well below 24 kg.

In addition to packaging refinements, some circuit modifications and enhancements will be incorporated into the design of the EM PPU. The most significant will make each of the beam modules addressable such that only as many as required will be operating for each throttle table setting, as mentioned above. This will allow control over the amount of power processed by each module to yield the maximum possible efficiency over the full throttling range of the engine. We anticipate that this will help increase PPU efficiency to greater than 95% at high power and greater than 90% will be maintained over the full throttle table.

CONCLUSION

The NEXT PPU has been designed to operate a 40 cm ion engine. It operates over a wide range of power bus voltages (80 to 160 V) and delivers variable outputs to allow thruster throttling from 1 kW to over 6 kW while maintaining efficiencies of in excess of 90% in the upper 2/3 of the throttle table. At the highest power outputs, demonstrated efficiency approaches 95%. This is more than a full percentage point improvement over the NSTAR PPU. The anticipated mass of a flight version of this design is less than 24 kg. This represents a specific mass of 4 kg/kW, which is 33% less than the NSTAR PPU. This kind of efficiency and mass of the PPU will make the NEXT 6 kW ion propulsion system very attractive for many planetary missions.

REFERENCES

1. Contract No. NAS3-02158
2. Patterson, M, J., et al., "Thruster Development Status for NEXT: NASA's Evolutionary Xenon Thruster," AIAA-2003-4862, Joint Propulsion Conference, Huntsville, AL, July 20-23, 2003.
3. Piñero, L. R., et al., "Design of a Modular 5-kW Power Processing Unit for the Next-Generation 40-cm Ion Engine," IEPC-01-329, 27th International Electric Propulsion Conference, Pasadena, CA, 15-19 October, 2001.
4. Hamley, J. A., et al., "The Design and Performance Characteristics of the NSTAR PPU and DCIU," AIAA-98-3938, Joint Propulsion Conference, Cleveland, OH, July 20-23, 1998.

DEFINITIONS, ACRONYMS, ABBREVIATIONS

DCIU	Digital Command and Interface Unit
DS1	Deep Space One
EDD	Boeing Electron Dynamic Devices, Inc.
EM	Engineering Model
Iacc	Accelerator supply current
Ibeam	Beam (screen) supply current
Idis	Discharge supply current
Ink	Neutralizer supply current
JPL	Jet Propulsion Laboratory
GRC	NASA Glenn Research Center
NASA	National Aeronautics and Space Administration
Neut	Neutralizer
NSTAR	NASA Solar-Electric-Propulsion Technology Applications Readiness
Pacc	Accelerator supply power
Pbeam	Beam (screen) supply power
Pdis	Discharge supply power
Pnk	Neutralizer supply power
PPU	Power Processing Unit
Ptotal	Total output power to thruster
PWB	Printed wiring board
Vacc	Accelerator supply voltage
Vbeam	Beam (screen) supply voltage
Vdis	Discharge supply voltage
Vnk	Neutralizer supply voltage

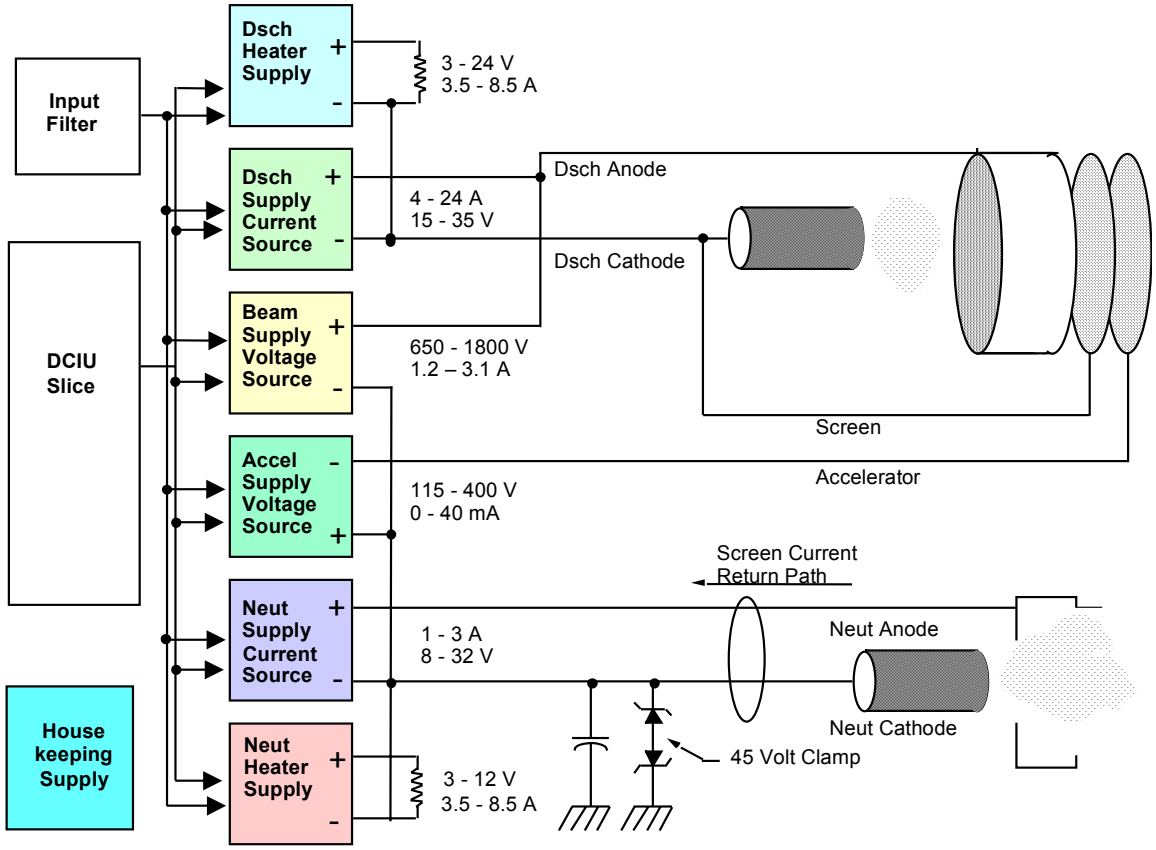

Figure 1. NEXT PPU block diagram showing internal power supplies and thruster interfaces

Table 1. The breadboard PPU component power supplies

Supply	NEXT	NSTAR
Beam (Screen)		
Output Voltage:	650 – 1800 VDC	650 – 1100 VDC
Output Current:	1.2 – 3.1 ADC	0.5 – 1.8 ADC
Regulation Mode:	Constant Voltage	Constant Voltage
Ripple:	< 5% of setpoint, regulated	< 5% of setpoint, regulated
Accelerator		
Output Voltage:	-115 to -400 VDC	-150 to -250 VDC
Output Current:	0 – 0.040 ADC, 0.4 A surge (100 ms)	0 – 0.020 ADC, 0.2 A surge (100 ms)
Regulation Mode:	Constant Voltage	Constant Voltage
Ripple:	< 5% of setpoint, regulated	< 5% of setpoint, regulated
Discharge		
Output Voltage:	15 – 35 VDC	15 – 35 VDC
Output Current:	4 – 24 ADC	4 – 14 ADC
Regulation Mode:	Constant Current	Constant Current
Ripple:	< 5% of setpoint, regulated	< 5% of setpoint, regulated
Discharge Pulse Igniter		
Pulse Amplitude:	750 ± 100 V peak	650 V peak
Pulse Duration:	10 µsec	10 µsec
Rate of Rise:	>150 V/µsec	150 V/µsec
Repetition Rate:	10 Hz min	10 Hz min
Discharge Heater		
Output Voltage:	3 – 24 VDC	3 – 12 VDC
Output Current:	3.5 – 8.5 ADC	3.5 – 8.5 ADC
Regulation Mode:	Constant Current	Constant Current
Ripple:	< 5% of setpoint, regulated	< 5% of setpoint, regulated
Neutralizer		
Output Voltage:	8 – 32 VDC	8 – 32 VDC
Output Current:	1 – 3 ADC	1 – 2 ADC
Regulation Mode:	Constant Current	Constant Current
Ripple:	< 5% of setpoint, regulated	< 5% of setpoint, regulated
Neutralizer Pulse Igniter		
Pulse Amplitude:	750 ± 100 V peak	650 V peak
Pulse Duration:	10 µsec	10 µsec
Rate of Rise:	>150 V/µsec	150 V/µsec
Repetition Rate:	10 Hz min	10 Hz min
Neutralizer Heater		
Output Voltage:	3 – 12 VDC	3 – 12 VDC
Output Current:	3.5 – 8.5 ADC	3.5 – 8.5 ADC
Regulation Mode:	Constant Current	Constant Current
Ripple:	< 5% of setpoint, regulated	< 5% of setpoint, regulated

Table 2. NEXT Throttle Table

Throttle Point	Vbeam V	Ibeam A	Pbeam W	Vacc -V	Iacc mA	Pacc V	Vdis V	Idis A	Pdis W	Vnk V	Ink A	Pnk W	Ptotal W
30	1800	3.11	5599	250	10.5	2.6	24	17.4	417	12	3	36	6055
29	1800	2.71	4877	250	9.2	2.3	24	15.8	380	12	3	36	5295
28	1800	2.36	4244	250	8.0	2.0	24	14.4	346	12	3	36	4628
27	1800	2.01	3612	250	6.8	1.7	24	12.9	310	12	3	36	3960
26	1800	1.61	2890	250	5.4	1.4	24	11.1	266	12	3	36	3193
25	1800	1.20	2167	250	4.1	1.0	26	8.4	219	12	3	36	2423
24	1567	3.11	4874	235	10.5	2.5	24	17.4	417	12	3	36	5330
23	1567	2.71	4245	235	9.2	2.2	24	15.8	380	12	3	36	4663
22	1567	2.36	3695	235	8.0	1.9	24	14.4	346	12	3	36	4078
21	1567	2.01	3145	235	6.8	1.6	24	12.9	310	12	3	36	3492
20	1567	1.61	2516	235	5.4	1.3	24	11.1	266	12	3	36	2819
19	1567	1.20	1887	235	4.1	1.0	26	8.4	219	12	3	36	2142
18	1396	3.11	4342	220	10.5	2.3	24	17.4	417	12	3	36	4798
17	1396	2.71	3782	220	9.2	2.0	24	15.8	380	12	3	36	4200
16	1396	2.36	3292	220	8.0	1.8	24	14.4	346	12	3	36	3675
15	1396	2.01	2801	220	6.8	1.5	24	12.9	310	12	3	36	3149
14	1396	1.61	2241	220	5.4	1.2	24	11.1	266	12	3	36	2544
13	1396	1.20	1681	220	4.1	0.9	26	8.4	219	12	3	36	1936
12	1179	3.11	3667	200	10.5	2.1	24	17.4	417	12	3	36	4123
11	1179	2.71	3194	200	9.2	1.8	24	15.8	380	12	3	36	3612
10	1179	2.36	2780	200	8.0	1.6	24	14.4	346	12	3	36	3163
9	1179	2.01	2366	200	6.8	1.4	24	12.9	310	12	3	36	2713
8	1179	1.61	1893	200	5.4	1.1	24	11.1	266	12	3	36	2196
7	1179	1.20	1420	200	4.1	0.8	26	8.4	219	12	3	36	1675
6	1021	2.71	2766	175	9.2	1.6	24	15.8	380	12	3	36	3184
5	1021	2.36	2408	175	8.0	1.4	24	14.4	346	12	3	36	2791
4	1021	2.01	2049	175	6.8	1.2	24	12.9	310	12	3	36	2396
3	1021	1.61	1639	175	5.4	0.9	24	11.1	266	12	3	36	1942
2	1021	1.20	1229	175	4.1	0.7	26	8.4	219	12	3	36	1485
1	850	1.20	1023	125	4.1	0.5	26	8.4	219	12	3	36	1279
0	679	1.20	818	115	4.1	0.5	26	8.4	219	12	3	36	1073

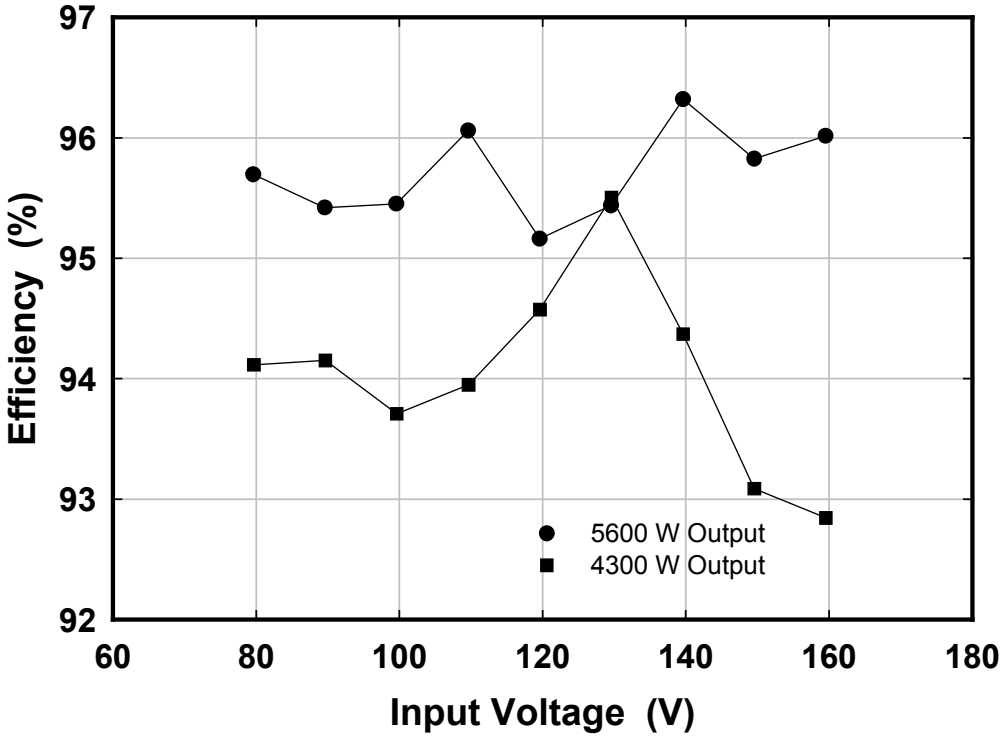

Figure 2. Beam supply efficiency as a function of input voltage at two output power levels

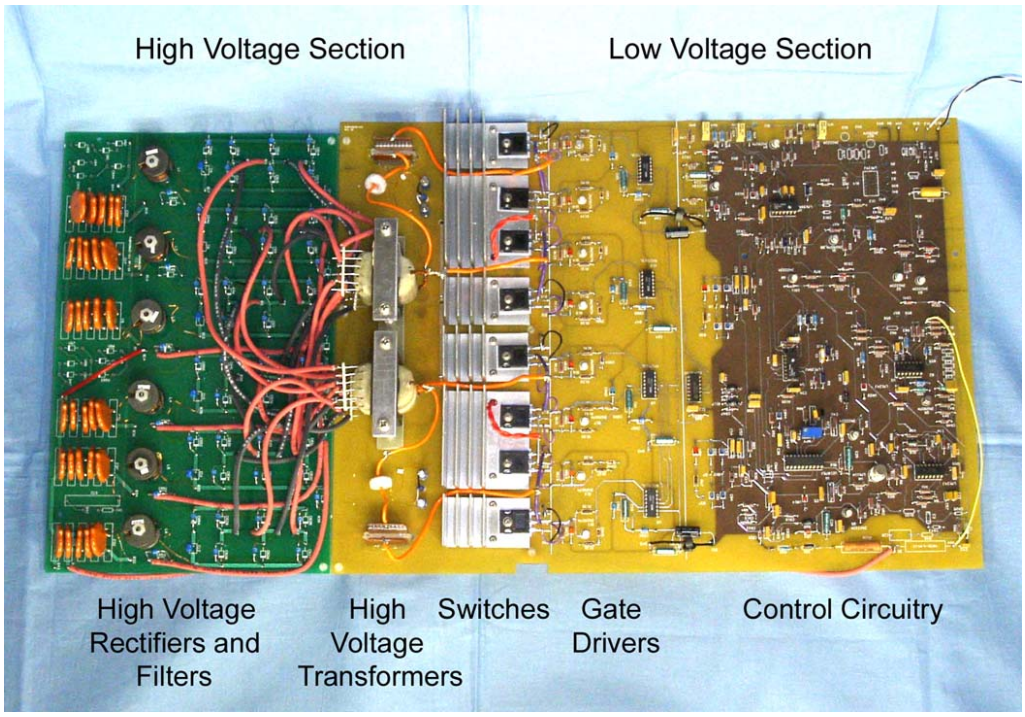

Figure 3. Individual beam supply module

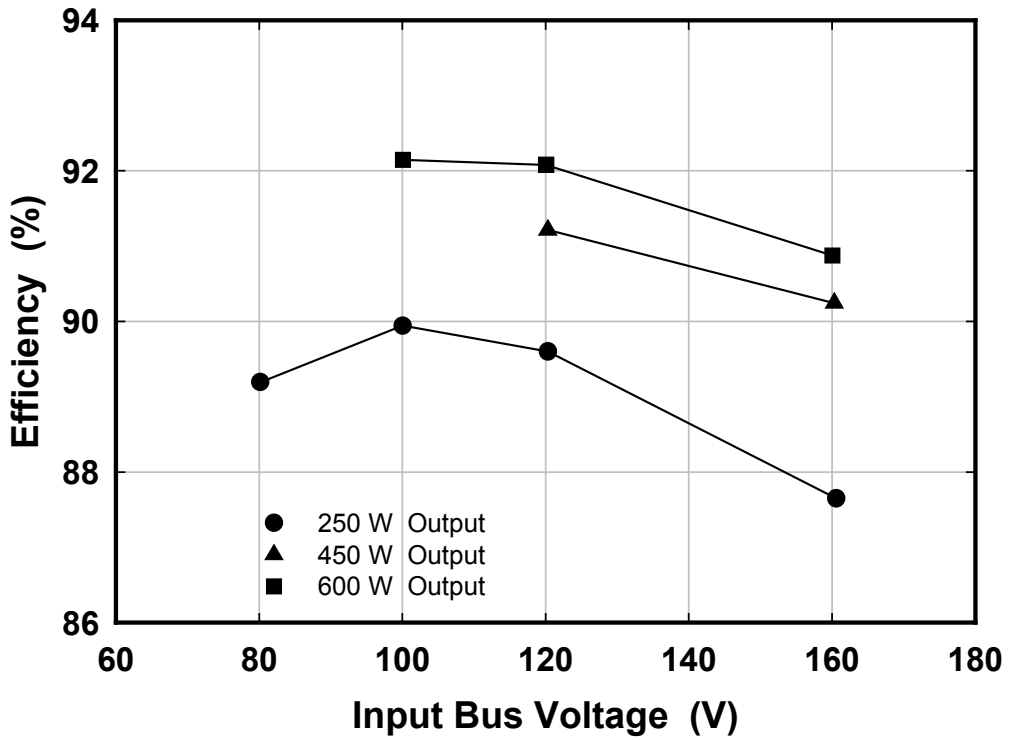

Figure 4. Discharge supply efficiency as a function of input voltage at various output power levels

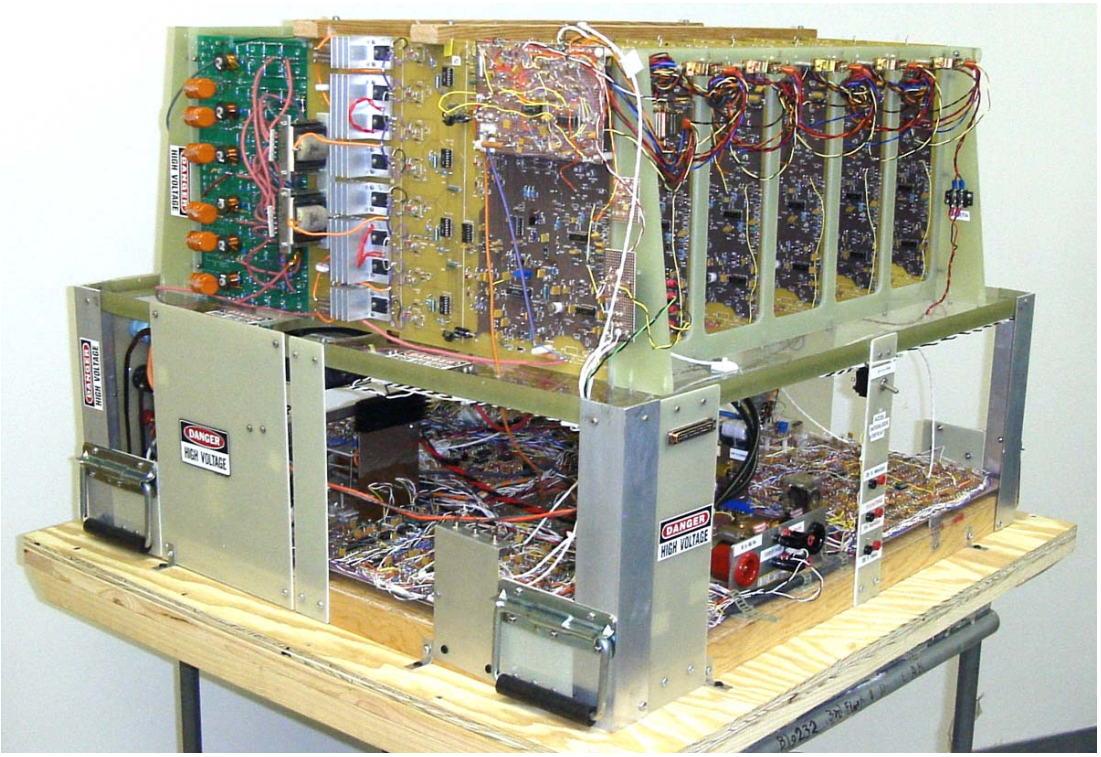

Figure 5. NEXT breadboard PPU. The top half is the beam supply.

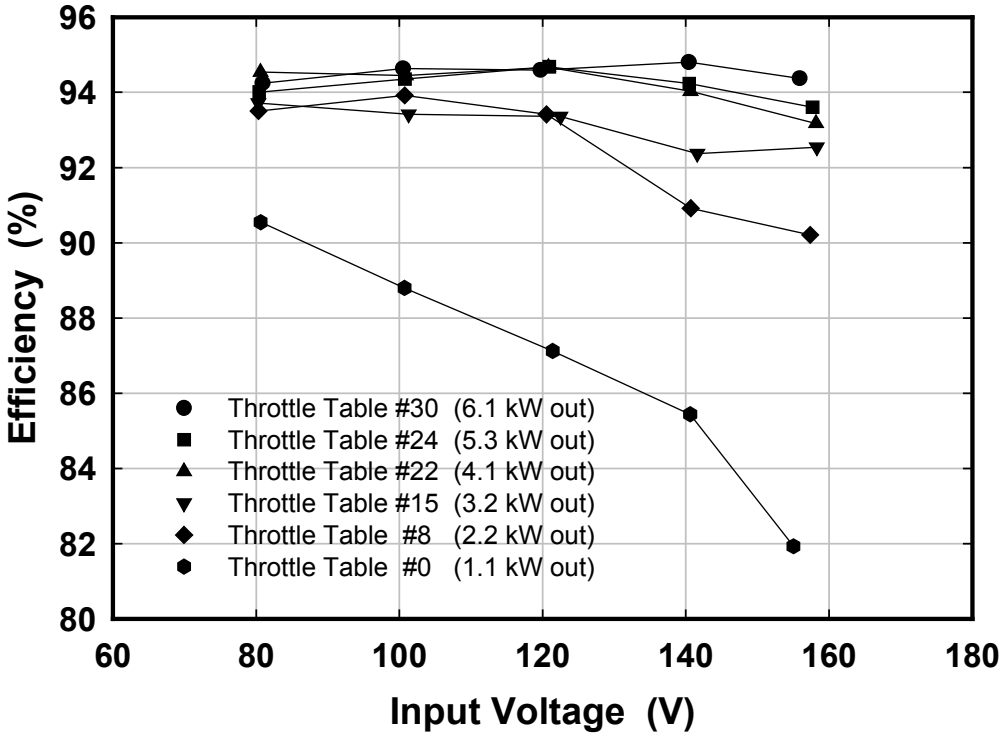

Figure 6. Gross overall PPU efficiency as a function of input voltage at various throttle settings

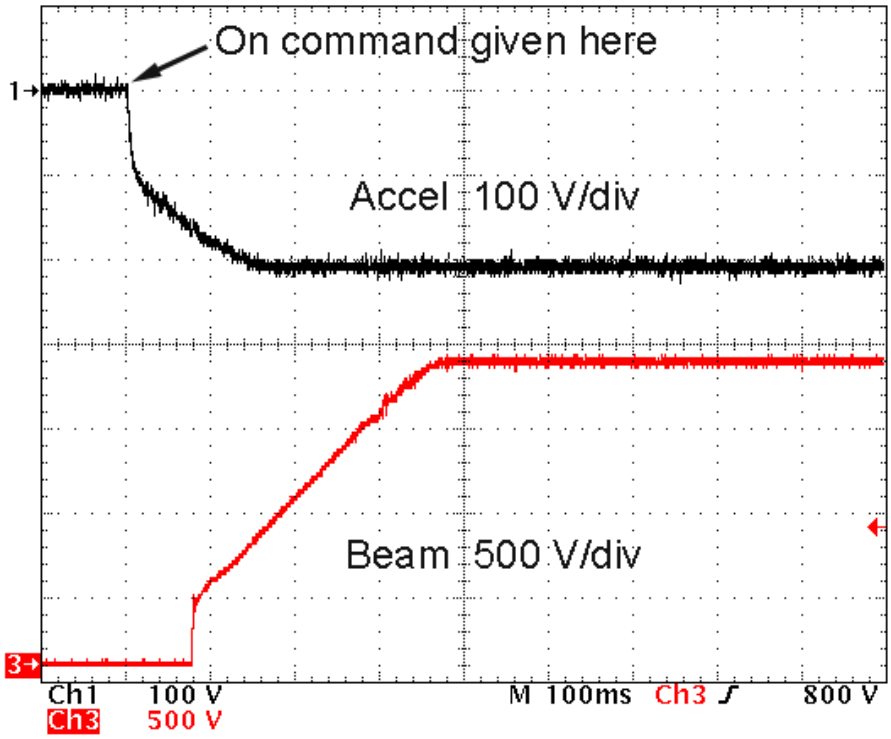

Figure 7. Turn-on transients

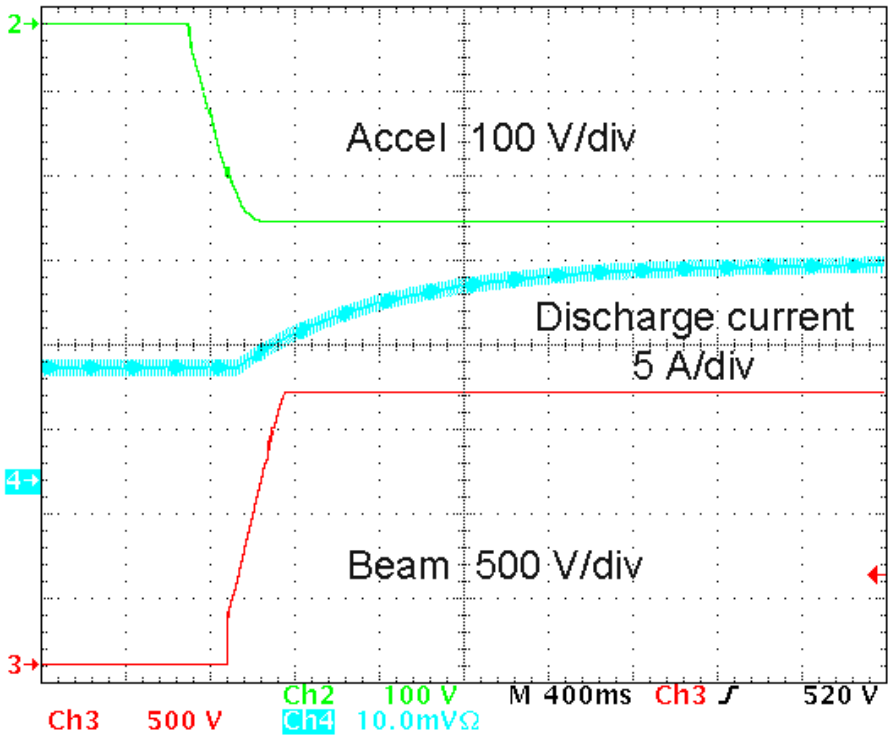

Figure 8. Re-cycle transients

REPORT DOCUMENTATION PAGE

Form Approved
OMB No. 0704-0188

Public reporting burden for this collection of information is estimated to average 1 hour per response, including the time for reviewing instructions, searching existing data sources, gathering and maintaining the data needed, and completing and reviewing the collection of information. Send comments regarding this burden estimate or any other aspect of this collection of information, including suggestions for reducing this burden, to Washington Headquarters Services, Directorate for Information Operations and Reports, 1215 Jefferson Davis Highway, Suite 1204, Arlington, VA 22202-4302, and to the Office of Management and Budget, Paperwork Reduction Project (0704-0188), Washington, DC 20503.

1. AGENCY USE ONLY (*Leave blank*)

2. REPORT DATE
March 2005

3. REPORT TYPE AND DATES COVERED
Technical Memorandum

4. TITLE AND SUBTITLE
Development of the NEXT Power Processing Unit

5. FUNDING NUMBERS
WBS–22–800–50–10

6. AUTHOR(S)
Thomas K. Phelps, Steve Wiseman, David S. Komm, Thomas Bond, and Luis R. Piñero

7. PERFORMING ORGANIZATION NAME(S) AND ADDRESS(ES)
National Aeronautics and Space Administration
John H. Glenn Research Center at Lewis Field
Cleveland, Ohio 44135–3191

8. PERFORMING ORGANIZATION REPORT NUMBER
E–14815

9. SPONSORING/MONITORING AGENCY NAME(S) AND ADDRESS(ES)
National Aeronautics and Space Administration
Washington, DC 20546–0001

10. SPONSORING/MONITORING AGENCY REPORT NUMBER
NASA TM—2005-213347
AIAA–2003–4867

11. SUPPLEMENTARY NOTES
Prepared for the 39th Joint Propulsion Conference and Exhibit cosponsored by the AIAA, ASME, SAE, and ASEE, Huntsville, Alabama, July 20–23, 2003. Thomas K. Phelps, Steve Wiseman, David S. Komm, and Thomas Bond, Boeing Electron Dynamic Devices, Inc., 3100 W. Lomita Blvd., Torrance, California 90505; and Luis R. Piñero, NASA Glenn Research Center. Responsible person, Luis R. Piñero, organization code 5430, 216–977–7428.

12a. DISTRIBUTION/AVAILABILITY STATEMENT
Unclassified - Unlimited
Subject Category: 20 Distribution: Nonstandard
Available electronically at http://gltrs.grc.nasa.gov
This publication is available from the NASA Center for AeroSpace Information, 301–621–0390.

12b. DISTRIBUTION CODE

13. ABSTRACT ***(Maximum 200 words)***

Boeing Electron Dynamic Devices, Inc. (EDD) has designed and fabricated a breadboard version of a 6 kW power processing unit (PPU) for gridded ion thrusters. This breadboard PPU will be integrated with an engineering model 40 cm ion engine designed and tested at NASA Glenn. The results of our tests using resistive loads are reported in this paper. The PPU demonstrated efficiencies to date are higher than 95 percent for the beam supply and higher than 92 percent for the discharge supply at full power. Overall PPU efficiency is greater than 94 percent at full throttle settings.

14. SUBJECT TERMS
Electric propulsion; Ion thrusters; Power processing unit

15. NUMBER OF PAGES
16

16. PRICE CODE

17. SECURITY CLASSIFICATION OF REPORT
Unclassified

18. SECURITY CLASSIFICATION OF THIS PAGE
Unclassified

19. SECURITY CLASSIFICATION OF ABSTRACT
Unclassified

20. LIMITATION OF ABSTRACT