NASA/CR—2005-213322

HSCT Sector Combustor Hardware Modifications for Improved Combustor Design

Stuart C. Greenfield, Paul V. Heberling, and George E. Moertle
General Electric Aircraft Engines, Cincinnati, Ohio

January 2005

The NASA STI Program Office . . . in Profile

Since its founding, NASA has been dedicated to the advancement of aeronautics and space science. The NASA Scientific and Technical Information (STI) Program Office plays a key part in helping NASA maintain this important role.

The NASA STI Program Office is operated by Langley Research Center, the Lead Center for NASA's scientific and technical information. The NASA STI Program Office provides access to the NASA STI Database, the largest collection of aeronautical and space science STI in the world. The Program Office is also NASA's institutional mechanism for disseminating the results of its research and development activities. These results are published by NASA in the NASA STI Report Series, which includes the following report types:

- TECHNICAL PUBLICATION. Reports of completed research or a major significant phase of research that present the results of NASA programs and include extensive data or theoretical analysis. Includes compilations of significant scientific and technical data and information deemed to be of continuing reference value. NASA's counterpart of peer-reviewed formal professional papers but has less stringent limitations on manuscript length and extent of graphic presentations.

- TECHNICAL MEMORANDUM. Scientific and technical findings that are preliminary or of specialized interest, e.g., quick release reports, working papers, and bibliographies that contain minimal annotation. Does not contain extensive analysis.

- CONTRACTOR REPORT. Scientific and technical findings by NASA-sponsored contractors and grantees.

- CONFERENCE PUBLICATION. Collected papers from scientific and technical conferences, symposia, seminars, or other meetings sponsored or cosponsored by NASA.

- SPECIAL PUBLICATION. Scientific, technical, or historical information from NASA programs, projects, and missions, often concerned with subjects having substantial public interest.

- TECHNICAL TRANSLATION. English-language translations of foreign scientific and technical material pertinent to NASA's mission.

Specialized services that complement the STI Program Office's diverse offerings include creating custom thesauri, building customized databases, organizing and publishing research results . . . even providing videos.

For more information about the NASA STI Program Office, see the following:

- Access the NASA STI Program Home Page at ***http://www.sti.nasa.gov***

- E-mail your question via the Internet to help@sti.nasa.gov

- Fax your question to the NASA Access Help Desk at 301–621–0134

- Telephone the NASA Access Help Desk at 301–621–0390

- Write to:
  NASA Access Help Desk
  NASA Center for AeroSpace Information
  7121 Standard Drive
  Hanover, MD 21076

NASA/CR—2005-213322

HSCT Sector Combustor Hardware Modifications for Improved Combustor Design

Stuart C. Greenfield, Paul V. Heberling, and George E. Moertle
General Electric Aircraft Engines, Cincinnati, Ohio

Prepared under Contract NAS3–26617

National Aeronautics and
Space Administration

Glenn Research Center

January 2005

Document History

This research was originally published internally as HSR030 in January 1996.

Note that at the time of writing, the NASA Lewis Research Center
was undergoing a name change to the
NASA John H. Glenn Research Center at Lewis Field.
Both names may appear in this report.

Available from

NASA Center for Aerospace Information
7121 Standard Drive
Hanover, MD 21076

National Technical Information Service
5285 Port Royal Road
Springfield, VA 22100

Available electronically at http://gltrs.grc.nasa.gov

SUMMARY

An alternative to the stepped-dome design for the lean premixed prevaporized (LPP) combustor has been developed. The new design uses the same premixer types as the stepped-dome design: integrated mixer flameholder (IMFH) tubes and a cyclone swirler pilot. A rectangular sector combustor has been designed and the hardware procured. The IMFH fuel system has been taken to a new level of development. Although the IMFH fuel system design developed in this Task is not intended to be engine-like hardware, it does have certain characteristics of engine hardware, including separate fuel circuits for each of the fuel stages. The four main stage fuel circuits are integrated into a single system which can be withdrawn from the combustor as a unit. Additionally, two new types of liner cooling have been designed. Both of these designs utilize single-piece compliant heat shields containing no joints that could leak cooling air, yet retain the ability to accommodate thermal stresses without warping. These designs also appear to offer benefits in ease of fabrication. This combination of advantages is especially desirable for slave liners for LPP sector combustors.

Tests were carried out at the Southwest Research Institute (SwRI) on GEAE Dome Configurations 4, 7, 11, and 14 of the cyclone swirler pilot over a wide range of pressures and temperatures. The resulting lean blowout data was found to correlate well with the Lefebvre parameter. As expected, CO and unburned hydrocarbons emissions were shown to have an approximately linear relationship, even though some scatter was present in the data, and the CO versus flame temperature data showed the typical cupped shape. Finally, the NOx emissions data was shown to agree well with a previously developed correlation based on emissions data from Configuration 3 tests performed at GE. The design variations of the cyclone swirler pilot that were investigated in this study did not significantly change the NOx emissions from the baseline design (GEAE Configuration 3) at supersonic cruise conditions.

TABLE OF CONTENTS

1.0 INTRODUCTION 1

2.0 OBJECTIVES 1

2.1 Subtask A: 2D Sector Combustor Design Modifications 1

2.2 Subtask B: Pilot Stage Premixer Performance Evaluation 2

2.3 Subtask C: Deliverables 2

3.0 TECHNICAL PROGRESS 2

3.1 Subtask A: MRA 2D Sector 2
3.1.1 Aero-Thermal Design 2
3.1.2 Mechanical Design 5
3.1.3 Procurement 7
3.1.4 Testing 8
3.1.5 CFD Results - MRA 2D Sector 8

3.2 Subtask B: Pilot Dome Performance Evaluation 9
3.2.1 Flame Tube Fabrication 9
3.2.2 Gas Sampling Probe Fabrication 9
3.2.3 Gas Sampling Probe Installation and Rig Shakedown 9
3.2.4 Combustor Testing 10
3.2.5 Data Transmittal and Analysis 10
3.2.6 Schedule 12

3.3 Subtask C: Deliverables 12

4.0 SCHEDULE 12

5.0 CONCLUSIONS 12

5.1 Subtask A: MRA 2D Sector 12

5.2 Subtask B: Pilot Dome Performance Evaluation 12

6.0 REFERENCES 13

7.0 TABLES 1 AND 2

8.0 FIGURES 1-26

9.0 APPENDICES A-D

1.0 INTRODUCTION

Efforts in pursuit of a lean premixed prevaporized (LPP) low emission combustor for the high speed civil transport (HSCT) are focused on the demonstration of a NOx emissions index of less than 5 g NOx/kg fuel. This goal has been demonstrated using practical fuel-air premixer designs in sub-component evaluations. The goal has also been achieved at the design flame temperature and close to supersonic cruise combustor inlet conditions in sector combustor tests of an integrated combustor system. This first sector combustor design is referred to as the stepped-dome combustor design. It is often referred to as the 5-cup sector combustor because it has five cyclone swirler pilots. This differentiates it from the 3-cup sector of a very similar design which is being tested at NASA and the sector combustor described in this report which has four cyclone swirler pilots.

Four areas of concern in the HSCT LPP combustor design are: [1] the ability to develop a practical fuel system design for the integrated mixer flameholder (IMFH) stages (one with the potential for relatively easy removal from the engine and that is capable of being thermally protected); [2] the ability to attain an acceptable combustor exit temperature profile over the full range of engine operating conditions; [3] the ability to develop a durable mechanical design for the heat shields of stepped-domes of the LPP combustor; and [4] the ability to meet the NOx emissions index (EI) requirements. Regarding number [4], the greatest concern is the NOx emissions of the cyclone pilot at high power conditions (i.e., during operation at the higher inlet pressures and temperatures, including those corresponding to supersonic cruise). NOx emissions from the IMFH tubes are less of a concern because their premixed nature helps maintain lower NOx levels than the cyclone. Issues one through three are addressed in Section 2.1 below by developing a new combustor system design that appears to have advantages in each of those areas of concern. Issue four is addressed in Section 2.2 by thoroughly testing four design modifications of the cyclone swirler.

2.0 OBJECTIVES

The objective of this task is to provide hardware for an evaluation of the MRA combustor system design and to test design modifications of the cyclone swirler pilot. Task 43 has been divided into three subtasks.

2.1 Subtask A: 2D Sector Combustor Design Modifications

The objective of Subtask A is to design a rectangular sector combustor using previously proven sub-components (IMFH mixers in the main dome and cyclone mixers in the pilot) for future testing. The fuel injectors will be fabricated. Section 3.1 addresses these points. The sector hardware will be the first to utilize the MRA (Multi-stage Radial Axial) system design concept. The MRA concept has features that address the first three LPP design concerns listed in the Introduction.

2.2 Subtask B: Pilot Stage Premixer Performance Evaluation

The objective of Subtask B is to test design modifications of the cyclone swirler pilot. The design modifications are intended to improve the premixing with the goal of reducing NOx emissions at supersonic cruise inlet conditions without compromising the low power operability performance essential for a pilot stage premixer. This objective is addressed in Section 3.2.

2.3 Subtask C: Deliverables

Submission of progress reports, semi-annual oral briefings, and a final report will complete the Task 43 requirements.

3.0 TECHNICAL PROGRESS

3.1 Subtask A: MRA 2D Sector

The multi-stage radial axial (MRA) combustor sector is the next phase in the evolution of the LPP low NOx combustor. As originally proposed in early 1994, the MRA concept arranged the IMFH tubes on what would normally be the outer liner and placed the pilot in the front of the combustor, inline with the diffuser. The basic concept was to eliminate the steps in the main domes by forcing flow from the pilot along the main dome (the outer liner) from the lower to the higher fuel stages. This, it was theorized, would prevent air from unfired stages from flowing into the recirculation zones which stabilized the flames from the fired IMFH tubes. The flowfield was also designed to force the mixing between the lower fired stages and the higher unfired stages. This mixing, it was theorized, would improve the combustor exit temperature profile during partial fuel staging. Further advantages of the MRA design were improved cyclone pilot centerbody positioning and improved placement of the combustor ignitor.

3.1.1 Aero-Thermal Design

CFD analysis of the original MRA design concept indicated that the exit profile advantages could be realized, although not as easily as was hoped. That CFD modeling was performed in LET Task 10 and those reports should be consulted for more detailed information. The original CFD model with a regular array of tubes on the outer liner did not yield good penetration of the jets from the IMFH tubes into the main combustor flow and offered no advantage in exit profile over the stepped-dome arrangement. Several strategies for improving the mixing were then tried before a good part-staging profile was demonstrated with the CFD model. First, the tube diameters were increased, with very little improvement in the penetration. The IMFH tubes were then aligned such that the jets were in the wake of the jets from preceding tubes. This was somewhat successful. However, it had the major disadvantage of requiring a lot of trial and error to optimize the tube location, since the flowfield of the combustor along the outer liner is not obvious. The final strategy proved to be the most successful, embodying two new strategies for improving jet penetration. The new strategies were to arrange the IMFH tubes so the jets were aligned with the swirl vortices from the pilot and to alternate the pilot swirl directions. Together, these resulted in excellent penetration of the IMFH tube jets. The

mixing was excellent. At partial staging corresponding to subsonic cruise, the combustor exit profile was very good. One last refinement resulted in an even better profile: a few of the fifth stage IMFH tubes were moved from the position where they reinforced the vortex to a position where they broke up the vortex and were aimed at the hot spot in the exit profile.

Meanwhile, another study being conducted on the design of the fuel system for the original MRA concluded that the location of the IMFH tubes on the outer liner was not conducive to a simple fuel system design. That conclusion was unexpected, since placing the inlets of the IMFH tubes near the outer liner was expected to be an advantage from the point of view of the IMFH fuel system. However, a workable fuel system design required inventions which were not forthcoming. At that point it was proposed to "flip" the MRA over and place the IMFH tubes in the front dome and the pilot on the outer liner. This design appeared to have definite advantages in the fuel system designs for both the IMFH stages and the cyclone swirler pilot stage. It also offered further advantages over the original MRA design in cyclone pilot centerbody positioning and placement of the combustor ignitor.

The new arrangement places the cyclone swirler where it will not have as high of an available pressure drop and the IMFH tubes where they will have the highest available pressure drop, since the best pressure recoveries from the diffuser occur in the center of the dome. Transposing the locations of the IMFH tubes and cyclone pilot are not expected to have a significant impact on emissions since both have shown an overall insensitivity to pressure drop. This is supported by Figures 1 and 2a, which show the NOx emissions, corrected for residence time in the combustor, at various component pressure drops. However, the 451 F case in Figure 2b indicates that the pressure drop may have some effect on cyclone emissions. Fortunately, the trend is such that a lower pressure drop tends to reduce NOx emissions. This would further support the move of the cyclone toward the outer liner, since the pressure drop would be lower in this region. The IMFH tube data in Figure 1 was acquired from the high pressure tests performed under Contract NAS3-25552; the data in Figure 2 (a and b) was obtained from the GEAE Configuration 11 cyclone tested at SwRI under this contract. Note that pressure drop *does* affect NOx emissions if the residence time is not taken into account, as is evident in Figure 3 (this is the same data as shown in Figure 1, but was not corrected for residence time). However, it has been assumed that the residence times for both configurations (i.e., the IMFH tubes inline versus along the wall) are approximately the same, such that total emissions will show little change.

The fuel system advantages of the new arrangement were significant. With reasonable care in arranging the IMFH tubes, for the first time it appeared that it might be possible to have relatively few main stage fuel injector assemblies and that they might be designed so that they could be removable through the combustor casing. Furthermore, the thermal protection of the IMFH fuel system for the first time appeared to be feasible using conventional methods. Two independent heat transfer studies were performed, one under LET Task 42 and the other CPC. They were done for slightly different geometries and

assumptions but generally yielded the same results. With the use of a single heat shield with an air gap, calculated bulk fuel temperature rises and wetted wall temperatures were well within requirements. These calculations were performed over the entire flight envelope, for both the mission points and off-design points. One calculation assumed that the pilot fuel flowed to the inner radius of the IMFH fuel strut before flowing outwards to the pilot. The fuel lines for the other stages took a more direct path (to minimize fuel strut cross-section and heat transfer area from the compressor air). However, the assumption was made that there was no significant resistance from the pilot fuel to the other stage fuel lines. Thus, when any of the other stages were flowing, that fuel would carry away its share of the heat. The other heat transfer model assumed that all of the fuel, including the pilot fuel, flowed to the inner radius of the IMFH fuel manifold before flowing out to their respective stages. For both of these designs, even when all of the main fuel stages (i.e., IMFH stages) were turned off, the entire IMFH fuel assembly would remain cooled by the flowing fuel. This requires a fuel line connecting the IMFH fuel assemblies to the pilot fuel injectors. This connection would probably be made outside the combustor casing. Not unexpectedly, the cycle conditions at which the higher compressor exit temperatures occur (which result in the greatest heat transfer), benefited from the higher fuel flows, which simultaneously offset the increased rate of heat transfer. The highest bulk fuel temperature rises and wetted-wall temperatures occur at initial descent from the supersonic leg of the mission.

The major change in the MRA combustor design (of "flipping" it over) occurred in August and September of 1994. In September, the aero design was frozen to meet the proposed schedule of this Task and the mechanical design was started in earnest. Because time was lost in making the changes, no time was spent in analyzing the layout of the IMFH tubes after they were moved to the forward dome. Essentially, the identical layout that had resulted in the best profile when the tubes were on the outer liner was applied to the forward dome. In any case, there was no one available to run the CFD modeling of the new layout at that time. CFD results for this new layout were obtained at a later date under the CPC contract and are discussed in Section 3.1.5.

One decision, about which there was much discussion, was the angle of the front bulkhead or dome. A 45-degree dome was chosen at first and used for the sector combustor (angles are expressed relative to the axis of the engine). The advantage of the 45-degree dome was that air from later stages was forced to mix into the bulk flow from the pilot and earlier stages. Also, the dome would be stiffer if it were a conical section rather than a flat plate. A 90-degree dome was also considered at that time. Its advantages were simplicity and the potential for a shorter combustor. It is interesting to note that subsequent to that decision, the favored dome design has evolved from 45 to 75 to 90 degrees. This trend has been driven by the desire to simplify the combustor design and shorten it as much as possible.

The main dome of the MRA 2D sector has four banks of 14 IMFH tubes each. Eleven of the tubes in each bank are angled 15 degrees in the circumferential direction relative to the dome plane; the other three tubes are angled (negative) three degrees in the

circumferential direction relative to the dome plane, or opposite to the other 11 tubes in that bank. The tube banks are alternately angled at 15 degrees (and the negative 3 degrees) corresponding to the alternating swirl directions of the cyclone swirler pilots. These angles, combined with the 45 degree dome angle, resulted in a complicated design. Figures 4-6 show different cutaway views of the IMFH main dome, while Figure 7 shows the basic combustor dimensions. The pilot dome consists of four individual cups, each consisting of a cyclone mixer and an airblast injector (see Figure 8). The cyclone mixers that make up the pilot dome are oriented in a swirl directions that are alternating (i.e., the air/fuel mixture discharged from one cup rotates in a direction opposite that of an adjacent cup). The pilot cups were reduced from five in the previous sector combustor design to four because the alternating swirl directions resulted in a pairing of the swirlers and because four pilots reduced the pilot effective area, expressed as a fraction of the total combustor flow area, to 21%, which was closer to pilot air splits for the current designs for the full size HSCT engine combustor. The aero design of the cyclone swirler pilots of the MRA sector is identical to the design in the 5-cup stepped-dome sector combustor. That design has been designated Configuration 3 at GEAE.

3.1.2 Mechanical Design

The mechanical design of this combustor is based on an effort to maintain the aero-thermal design details. The aero-thermal design chosen for the tube pattern layout is complex. (The evolution of the MRA concept since the aero design for the sector combustor was frozen for the sector combustor has been towards a much simpler design.) While the pilot mixers are of the same basic design as the stepped-dome combustor sector, the compound angles and staggered design of the four consecutive stages of the main dome are difficult to lay out and describe for fabrication.

Several problems were experienced with the 5-cup stepped-dome sector combustor. Most of the problems were associated with warpage because the hottest parts (the liners, domes, and sidewalls) were generally flat or a simple curve. Generally, compound curved parts would be much more resistant to warpage. However, to minimize the cost of the MRA sector the intent was to fabricate the domes, liners, and sidewalls entirely from flat plates. To minimize warpage, it was necessary to make these structural parts distinct from the heat shields adjacent to the hot combustion gases. Two general approaches that could be used to accommodate the thermal expansion of the hot surfaces are segmented designs and compliant designs. Although segmented designs have advantages in durability, the challenge is to minimize the effects of air leakage between the segments. For engine hardware, there is incentive to solve the leakage problems. In a rig test in which the objective is to study the performance and emissions without any confounding effects of leakage, a compliant design with no leakage appeared to be the better choice.

Two compliant designs for the heat shields were proposed. One is more suited for liners that do not have penetrations and the other is more suitable for the main dome, which has numerous penetrations from the IMFH tubes and the sidewalls which have to accommodate the ignitor. The approach used in this MRA sector converts the impingement baffle from a passive plate into the structural part of the dome which is

covered with a compliant heat shield. Having the impingement baffle as the structural member eliminates the great thermal difference between the hot dome and the relatively cold IMFH tubes as well as other cold parts such as the flanges to which the combustor dome is attached.

The selected configuration for the main dome heat shield uses a thin sheet of a high-temperature alloy (0.004 inch thick Haynes 230) riveted to the structural impingement baffle (see Figure 9). The attaching rivets are located in dimples, pressed into the shield material in a regular pattern. This allows the rivet heads to be located away from the hot areas of the heat shield and forms standoffs which become the impingement cavity between the plate and the shield. The spent impingement air is dumped into the IMFH tube exit through radial slots cut through the end of the IMFH tubes. The slots are strategically aligned with the impingement cavities formed around the ends of the tubes. The impingement cooling design was simply scaled from the previously successful 5-cup stepped-dome sector. A 3D ANSYS analysis of the dimpled material and rivet connection was used to investigate weak areas of the design. The results suggest that the material at the rivet connection is the most stressed area and that the material thickness is an important factor in the compliant nature of the heat shield.

The MRA 2D sector's inner and outer liner design uses a second cooling scheme involving another design for compliant heat shield. This design attempts to solve problems observed in the impingement/convective design used in the 5-cup stepped-dome 2D sector. These problems are: [1] nonuniform cooling, [2] relative movement between the impingement baffle and heat shield, and [3] excessive warping due to hot regions which are constrained by cold flanges. The inner and outer cooled liners of the MRA sector are constructed of a compliant corrugated panel (also made from 0.004 inch thick Haynes 230) brazed to the liner support plate (see Figure 10). Cooling air flows through the cavity created between the corrugated panel and the thicker mounting plate. The cooling flow is determined by the flow resistance of the cooling channels and is intended to give the same cooling effect as the impingement system used in the 5-cup stepped sector. The corrugated material is similar to existing material used in heat exchangers; however, unlike the available uniformly spaced corrugation, the pattern spacing of this material has been modified to maximize the cavity (cooled) area and minimize the surrounding ridged (uncooled) area. This system provides more uniform cooling and provides a compliant barrier between the very hot gas side and the cool backside. This system could not be employed on the side walls, since the corrugated material cannot have any intrusions through the wall without disrupting the cooling flow in a channel. Thus, the dimpled material used on the main domes is used for the side walls. The spent cooling flow exits around the edges through fabricated channels and is discharged downstream of the combustor exit.

The MRA sector fuel injector design is more rugged, more heat resistant, and simpler to install than other designs. The fueling device methodology used in the 5-cup stepped-dome rig does not work in the MRA configuration. The same design features of the MRA sector combustor which make it difficult to apply the manifold design of the 5-

cup sector (i.e., the inline layout of the IMFH tubes), favor a design which should be a step closer to an engine design. The MRA injectors continue to use the same basic fuel injector geometry (see Figure 11). The MRA injector is designed to be easily inserted into, and withdrawn from, the injector cavity (Figure 6 shows the injector mounted in the IMFH main dome). The injector is mounted to a passive part of the dome structure and protrudes into the injection region. Specifically, the injector stem protrudes vertically downward through the tube bank and fills in the part of the tube cut out to make room for the stem. Mounting the stem in this fashion keeps the fuel lines out of the path of the hot, high velocity gases. The design is made more rugged by hiding the injector tip in the center of the scallop where it is less likely to be damaged by mishandling. Unlike a single-staged staggered-dome fuel injector, the MRA injector contains multiple stages. During partial staging, the injector is partially cooled by fuel flowing through active stages of the injector. Additionally, the fuel feed lines are either made of double-walled tubing or have a heat shield around them (to within approximately 1.5 inches of the fuel discharge location).

To expedite the first test of the MRA 2D sector, it was to be done with uncooled liners, different from the compliant designs described above. These uncooled liners are expected to have a short life and exhibit the warping problems of the 5-cup sector liners. Previous tests with uncooled sector sidewalls constructed of a thick superalloy material have been successful in component tests. Problems like melting and warping that often occur with combustor liners are caused by uneven heating or hot spots on the liners. The controlled flame temperature, low fuel to air ratio, and highly mixed nature of the MRA concept should be beneficial in reducing these problems. A one-dimensional cooling analysis was conducted for the uncooled liners, with the results indicating that the liners may reach 2200 degrees Fahrenheit at the highest fuel to air ratio test points. Thus, a 0.25 inch thick layer of ceramic insulating material (Cotronics Corporation Number 360 standard ceramic board) was glued to the hot wall of the liners for added protection. The ceramic insulation is applied in 1.5 inch squares to alleviate differential thermal growth problems between the ceramic insulation and the colder metal liners. This also made installation (fitting and trimming) easier. The ceramic has a melting temperature of 3200° F and a continuous use rating of 2300° F. The insulation has been secured with ceramic adhesive (Cotronics Corporation Rescor 989 general purpose high temperature ceramic adhesive) capable of withstanding 3000° F. If the ceramic is effective and remains attached to the liners, it may be considered for use in future component and sub-component combustor testing.

3.1.3 Procurement

The fuel injector drawings needed to be completed first because of previous experience with long lead times on fuel devices. The drawings were submitted for quotes in late-November, 1994 and a purchase order was issued in mid-January, 1995. The delivery of the fuel parts was quoted as 20 weeks, but they were not received until late-October, 1995.

A meeting was held October 30, 1995 with representatives from Parker Hannifin. The intent of the meeting was to analyze the procurement procedure to better understand the causes of the delay and to improve the process so that future procurements of HSCT developmental fuel injectors with them can keep to the quoted schedule. A significant source of delay resulted from Parker's need to make new drawings from those sent by GE, even though GE's were of manufacturing quality. Although the vendor's reasons for making new drawings were valid, this seemed to be a place where much time could be saved. Thus, to expedite delivery they intend to update their system to allow GE drawings to be directly imported electronically. Although some modifications may still have to be made to the drawings by the vendor, it will still help reduce the lag time between ordering and receiving new parts in the future. This would be a significant improvement in the procurement process presently in place.

Fabrication of the fuel injectors was funded by Task 43, but fabrication of the other parts was not charged to Task 43. Discussion of the status of all the hardware in the following paragraphs is included to clarify the overall project leading up to the first sector test.

A purchase order was issued in early February, 1995 for the combustor assembly, with a delivery time quoted as 20 weeks, although it was not delivered until October, 1995. Because of the long lead time required to get the combustor parts, the vendor was asked to complete the pilot dome and the main IMFH dome at an earlier date. These parts were assembled with the set of uncooled thick-plate liners obtained from another vendor. They were originally to be used for atmospheric verification testing of the MRA combustor, but were instead used for the pressurized tests (the atmospheric tests were eliminated). The uncooled liners were designed, procured, and were already available. The uncooled liners were necessary because of the tight schedule and planning of this task.

Other parts to be procured were the fuel supply tubing, fastening hardware, insulation box for the manifold system, and the manifold supports. All parts have been received except for the cooled liners. For reference, the hardware data associated with the MRA highly mixed 2D sector is shown in Table 1.

3.1.4 Testing

A subcontractor (En-Sol, Inc.) was brought on board to help in the test setup, planning, monitoring, and data reduction. Instrumentation and assembly of the MRA sector with the uncooled liners was completed in October, 1995. Because of schedule slippage, the atmospheric testing had to be eliminated. The atmospheric tests would have provided an opportunity to investigate flame stability as well as visual appearance, however, the pressure test would provide more meaningful and a broader range of data than an atmospheric test.

3.1.5 CFD Results - MRA 2D Sector

Some of the CFD results of the modified configuration (i.e., with the IMFH tubes in the forward dome and the pilot near the outer wall) are presented in Figures 12 through 19. The data presented was obtained using CONCERT-3D with the combustor operating at

mid-supersonic conditions (P_3=9.47 atm, T_3=1650 R). The top and side views of the grid used for the calculations are presented in Figures 12 and 13, respectively, followed by the temperature contour at the main dome plane (Plane 2, Figure 14), and temperature and pattern factor contours at the combustor exit plane (Plane 86, Figures 15 and 16, respectively). Figures 17 and 18 present side views of velocity and temperature contours through the centerlines of a column of IMFH tubes (Plane 5). Similarly, a temperature contour through the center of the combustor (Plane 22, between columns of IMFH tubes) is presented in Figure 19.

3.2 Subtask B: Pilot Dome Performance Evaluation

The cyclone swirler pilot testing was subcontracted to the Southwest Research Institute in San Antonio, Texas. Dr. Clifford A. Moses was principle investigator. NOx, CO, and UHC emissions were measured and the lean stability limits were determined. These measurements were performed over a standard test point schedule with 36 points. Four configurations were tested, corresponding to GEAE Configurations 4, 7, 11, and 14. Figures 20 and 21 present the two basic variations of the configurations tested; both incorporate an impingement-cooled swirl cup with a removable fuel injector for quick change-out. Figure 20 corresponds to GE Configurations 4 and 7 (Configuration 7 simply has a taller swirler slot height than 4) and Figure 21 to Configurations 11 and 14. Table 2 presents more quantitative details of the physical differences between the four configurations.

The SwRI subcontracted efforts were divided into the six subtasks discussed below.

3.2.1 Flame Tube Fabrication

The SwRI rig was designed to be compatible with the existing GEAE hardware based on drawings supplied to SwRI by GEAE. Fabrication of the flame tube was completed in the first week in December, 1994.

3.2.2 Gas Sampling Probe Fabrication

Water-cooled sampling probes were designed using drawings of similar probes in use by GEAE. Four water-cooled gas sampling probes were fabricated from 0.5-inch diameter tubing. Following the destruction of two of the probes during the first dome configuration test, the probe cooling water was taken from a special water supply that had the calcium removed. The probes were also modified by adding a magnesium-zirconate thermal barrier coating (TBC) on the outside of the probes. This coating successfully protected the probes for the remainder of the tests.

3.2.3 Gas Sampling Probe Installation and Rig Shakedown

This task was completed in mid-January, 1995, after making the modifications described in Section 3.2.2.

3.2.4 Combustor Testing

Testing of all four pilot dome configurations (GEAE Configurations 4, 7, 11, and 14) was completed in July, 1995. Emissions measurements were made for all four configurations over a range of test conditions and lean blowout limits were established.

3.2.5 Data Transmittal and Analysis

The data acquired for all four dome configurations is presented in Appendices A-D. Analysis of the data led to the results discussed below.

As shown in Figure 22, the lean blowout limits were found to correlate well with the Lefebvre parameter:[1]

$$\phi_{LBO} = C_1 \times [V_{REF} / (P_4^{0.25} \times T_3 \times \exp(T_3/270))]^{0.16} + C_2,$$

where C_1 and C_2 are empirical constants whose values depend on the geometry of the combustion zone. However, the lean blowout data for $[V_{REF}/(P_4^{0.25} \times T_3 \times \exp(T_3/270))]^{0.16}$ greater than approximately 0.3 is not well-correlated. It is hypothesized that the discrepancy is a result of incomplete mixing of the fuel and air at these test conditions. This transition to a non-premixed mode of combustion is what leads to the observed increase in flame stability relative to the premixed case (i.e., a leaner lean blowout equivalence ratio was measured than was predicted by extrapolation of the correlation to larger values of the Lefebvre parameter). The remainder of the data (i.e., $[V_{REF}/(P_4^{0.25} \times T_3 \times \exp(T_3/270))]^{0.16}$ less than approximately 0.3) matched the correlation quite well. The curve-fit to the data indicates that C_1 is approximately 2.83, with an offset (C_2) of 0.285 for the four configurations tested.

Figure 23 shows the NOx emissions data for all four configurations plotted against a correlation developed from prior cyclone testing (i.e., GEAE Configuration 3). The correlation is of the form:

$$NOx_{Config\,3\,Correlation}(EI) = 0.824159 + 4.166818\, EI_{gasl}\, SP_{NOx}$$

where,

$$EI_{gasl} = \tau(msec) \times \exp\left[-72.28 + 2.8\sqrt{T_{pz}(K)} - \frac{T_{pz}(K)}{38.02}\right]$$

$$SP_{NOx} = \left(\frac{P_3(psia)}{432.7}\right)^{0.4} \times \exp\left[\frac{(T_3(R) - 460) - 1027.6}{349.9} + \frac{6.29}{53.2}\right]$$

and,

τ = residence time (msec) = $(\rho_4 Vol_{comb})/w_{36}$
T_{pz} = primary zone temperature (K).

Also note that SP_{NOx} is the NOx severity parameter, and $T_{pz}=T_4$ for these experiments (since there are no IMFH tubes).

The data for the four configurations tested matched the correlation well, following the form:

$$NOx(EI) = 0.7136\left[NOx_{Config\,3\,Correlation}(EI)\right]^{0.8449}$$

Note that this curve-fit corresponds to the data for all four configurations.

The above relationship between the new NOx data obtained at SwRI and the NOx data obtained at GEAE for Configuration 3 suggests that a significant reduction in NOx emissions were made in the new designs. However, examination of the NOx data at supersonic cruise combustor inlet conditions indicates that at those conditions no improvement has been made. The interpolated NOx values are shown in Table 2. These results are the most significant metric for the LPP combustor's performance.

In these tests, some thermal distress of the cyclone swirler hardware was observed. Most of the distress was explainable from unusual hardware failures that occurred in the test that have nothing to do with the aero design. In one case, the impingement baffle separated from the dome and came to rest on the radial swirler. This blocked the flow and caused flashback. In another case, the torque on the radial swirler caused it to spin and break from the resulting stress. In subsequent tests the swirler was spot welded in place, in addition to being clamped. The spinning type of failure had been anticipated. For years, torque calculations were performed for the radial swirlers, but this is the first known occurrence of this type of failure in the cyclone swirler.

Some other distress is unexplainable except for a lack of margin for flashback. There had been previous evidence of flashback in the earliest HSCT design of the cyclone swirler in which the fuel injector design was crude and may have dribbled fuel out the airblast nozzle. It is important to note that Configuration 3 has operated without any distress in the six HSCT sector combustor tests performed at GEAE. However, the SwRI test point schedule included inlet conditions outside the flight envelope, specifically cruise T_3 (1200 F) at take-off P_3 (250 psia). Although outside the engine flight envelope, the points were chosen because they were the most likely conditions at which flashback could occur and would be useful in determining flashback margin. The distress that was observed suggests the flashback occurs in the wakes of the radial jets from the fuel injectors. This is consistent with available CFD results, and is an important clue to defining changes to the design of the cyclone swirler pilot in the future that will improve its performance, both in terms of NOx emissions and margin on flashback.

In addition to the NOx data, CO and hydrocarbon emissions were measured. Figure 24 relates the CO to the unburned hydrocarbons emissions. As expected, the relationship is approximately linear, although some scatter in the data is clearly present. Finally, Figure 25 presents the CO data as a function of flame temperature (based on sampled emissions data) for the four dome configurations operating at P_3=60 psia and T_3=1050 F. The curves show the anticipated "cup" shape for all four configurations.

3.2.6 Schedule

All testing and data transmittal at SwRI called for in the Statement of Work was completed by the end of July, 1995. The final report was received by GE in August, 1995. Further data reduction was completed in December by GE personnel.

3.3 Subtask C: Deliverables

This final report completes the requirements of Subtask C.

4.0 SCHEDULE

The completed schedule for Task 43 is presented in Figure 26.

5.0 CONCLUSIONS

5.1 Subtask A: MRA 2D Sector

An alternative to the stepped-dome design for the LPP combustor has been developed. The new design uses the same premixer types as the stepped-dome design: IMFH tubes and a cyclone swirler pilot. A rectangular sector combustor has been designed and the hardware procured. The IMFH fuel system has been taken to a new level of development. Although the IMFH fuel system design developed in this Task is not intended to be engine-like hardware, it does have certain characteristics of engine hardware. This includes separate fuel circuits for each of the fuel stages. The four main stage fuel circuits are integrated into a single system which can be withdrawn from the combustor as a unit. Additionally, two new types of liner cooling have been designed. Both of these designs utilize single-piece compliant heat shields containing no joints that could leak cooling air, yet retain the ability to accommodate thermal stresses without warping. These designs also appear to offer benefits in ease of fabrication. This combination of advantages is especially desirable for slave liners for LPP sector combustors.

5.2 Subtask B: Pilot Dome Performance Evaluation

Tests were carried out at SwRI on GEAE Dome Configurations 4, 7, 11, and 14 of the cyclone swirler pilot over a wide range of pressures and temperatures. The resulting lean blowout data was found to correlate well with the Lefebvre parameter.[1] As expected, CO and unburned hydrocarbons emissions were shown to have an approximately linear relationship, even though some scatter was present in the data, and the CO versus flame temperature data showed the typical cupped shape. Finally, the NOx emissions data was shown to agree well with a previously developed correlation based on emissions data from Configuration 3 tests performed at GE. The design variations of the cyclone swirler pilot that were investigated in this study did not significantly change the NOx emissions from the baseline design (Configuration 3) at supersonic cruise conditions.

6.0 REFERENCES

1. Lefebvre, A.H., Gas Turbine Combustion, Hemisphere Publishing, New York, 1983, p.199.

Table 1. MRA 2D Highly Mixed Hardware

PART NUMBER	DESCRIPTION	BUILD NUMBER	QTY
DT1001-254	Injector Style 1	MRA 1 & 2	2
DT1001-255	IMFH Main Dome	MRA 1 & 2	2
DT1001-256	Injector Style 2	MRA 1 & 2	1
DT1001-257	Pilot Dome	MRA 1 & 2	1
DT1001-259	Outer Cooled Liner	MRA 2	1
DT1001-260	Inner Cooled Liner	MRA 2	1
DT1001-261	Left Cooled Sidewall	MRA 2	1
DT1001-264	Right Cooled Sidewall	MRA 2	1
DT1001-270	Outer Uncooled Liner	MRA 1	1
DT1001-271	Left Sidewall	MRA 1	1
DT1001-272	Inner Liner	MRA 1	1
DT1001-273	Left Uncooled Sidewall	MRA 1	1
DT1001-276	Fuel Manifold and Tubing	MRA 1 & 2	1 set

Table 2. Swirler Configurations Tested at SwRI

GEAE Configuration #	3	4	7	14	11
SwRI Test #	Tested at GEAE	1	2	3	4
Number of Fuel Injectors	6	6 (Reduced Air Flow)	8	6 (Contoured Air Nozzle)	8
Number of Swirler Vanes	60	60	40	60	60
Swirler Axial Length (in)	0.5	0.5	0.75	0.5	0.5
Nominal Premixer Residence Time (ms)	0.29	0.29	0.44	0.26	0.26
Swirler Slot Angle Relative to Radius (degrees)	70	70	70	45	45
Calculated Swirl Number	1.04	1.04	1.04	0.86	0.86
NOx EI at T3=1660 R, P3=150 psia, Tf=3500 R	22 (GEAE)	20 (SwRI)	No Data	19 (SwRI)	25 (SwRI)
Combustion Efficiency at T3=1660 R, P3=150 psia, Tf=3500 R	99.92%	99.88%	No Data	99.84%	99.72%

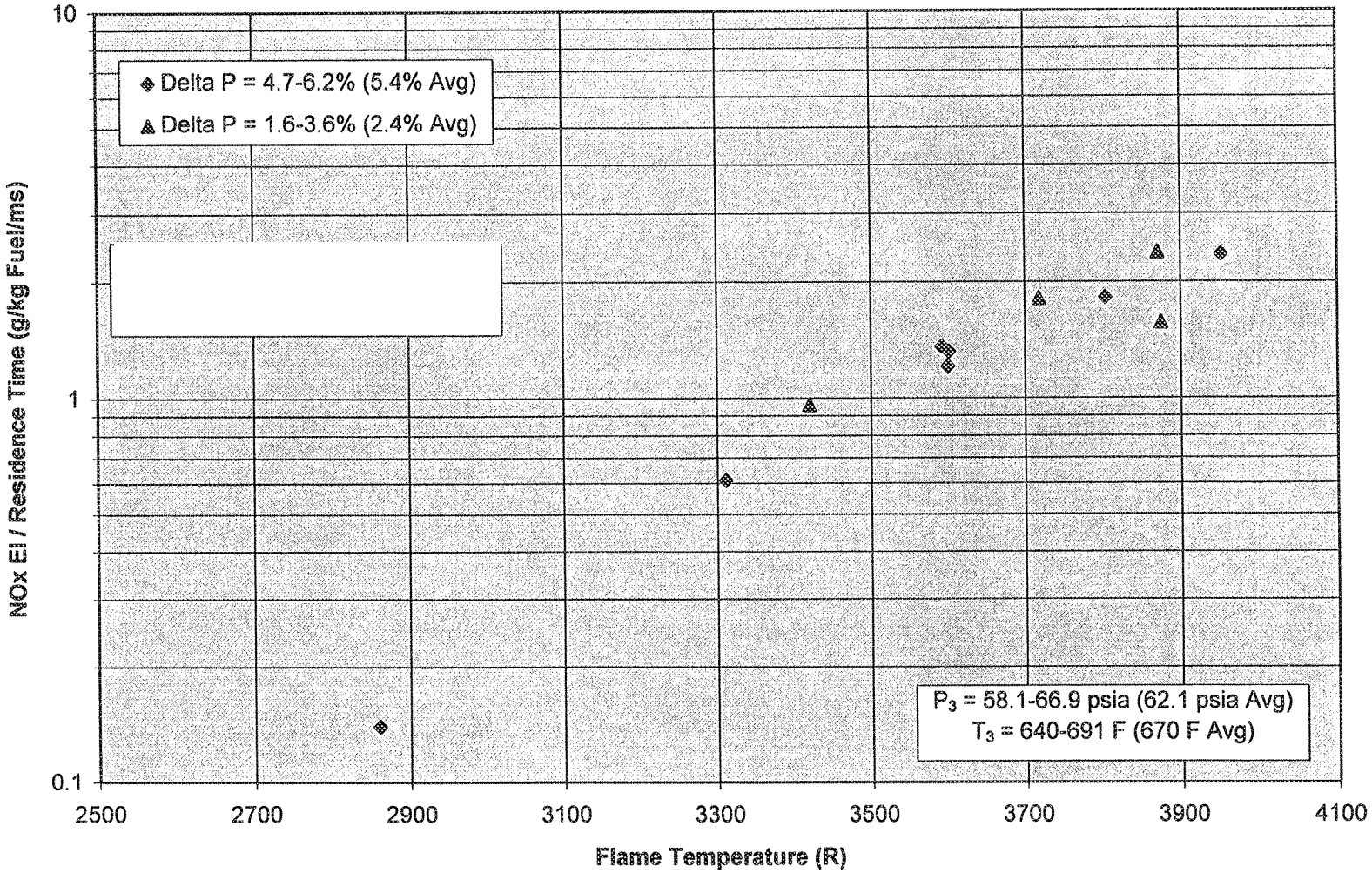

Figure 1. Dependence of NOx Emissions on Pressure Drop for the IMFH Tubes

[a]

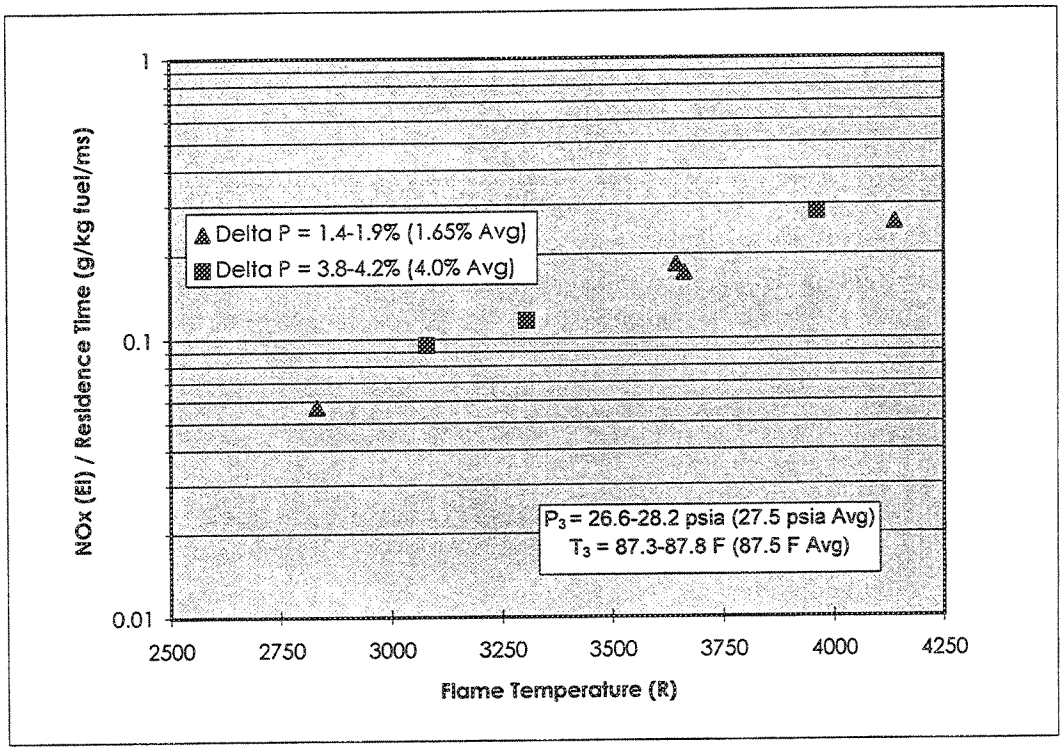

[b]

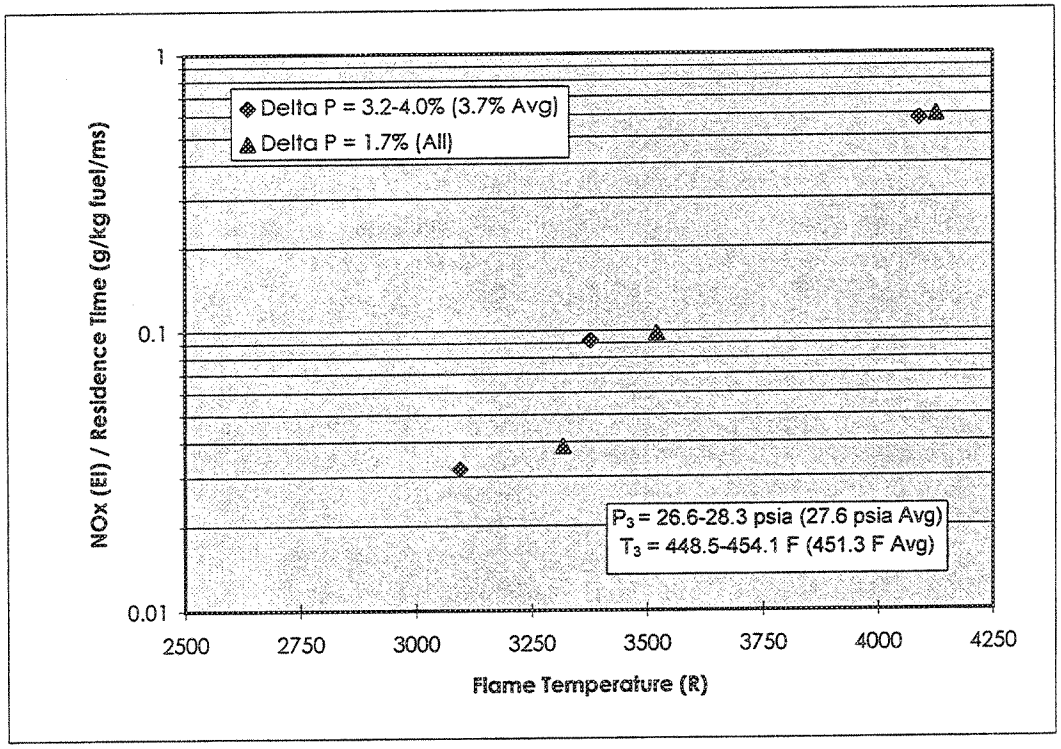

Figure 2. Dependence of NOx Emissions on Pressure Drop for the Configuration 11 Cyclone Swirler

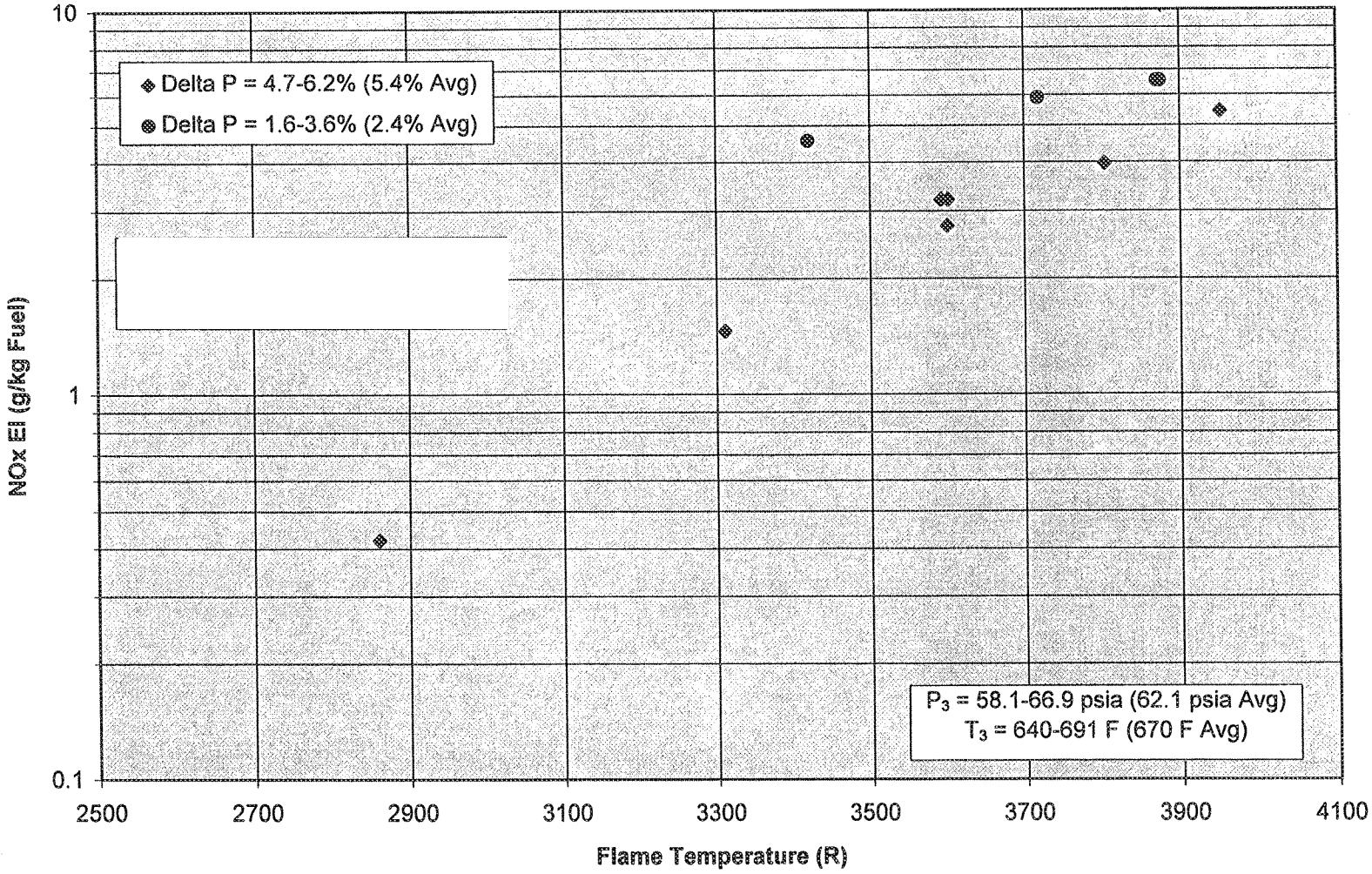

Figure 3. Dependence of NOx Emissions on Pressure Drop for the IMFH Tubes When Residence Time is Not Accounted For

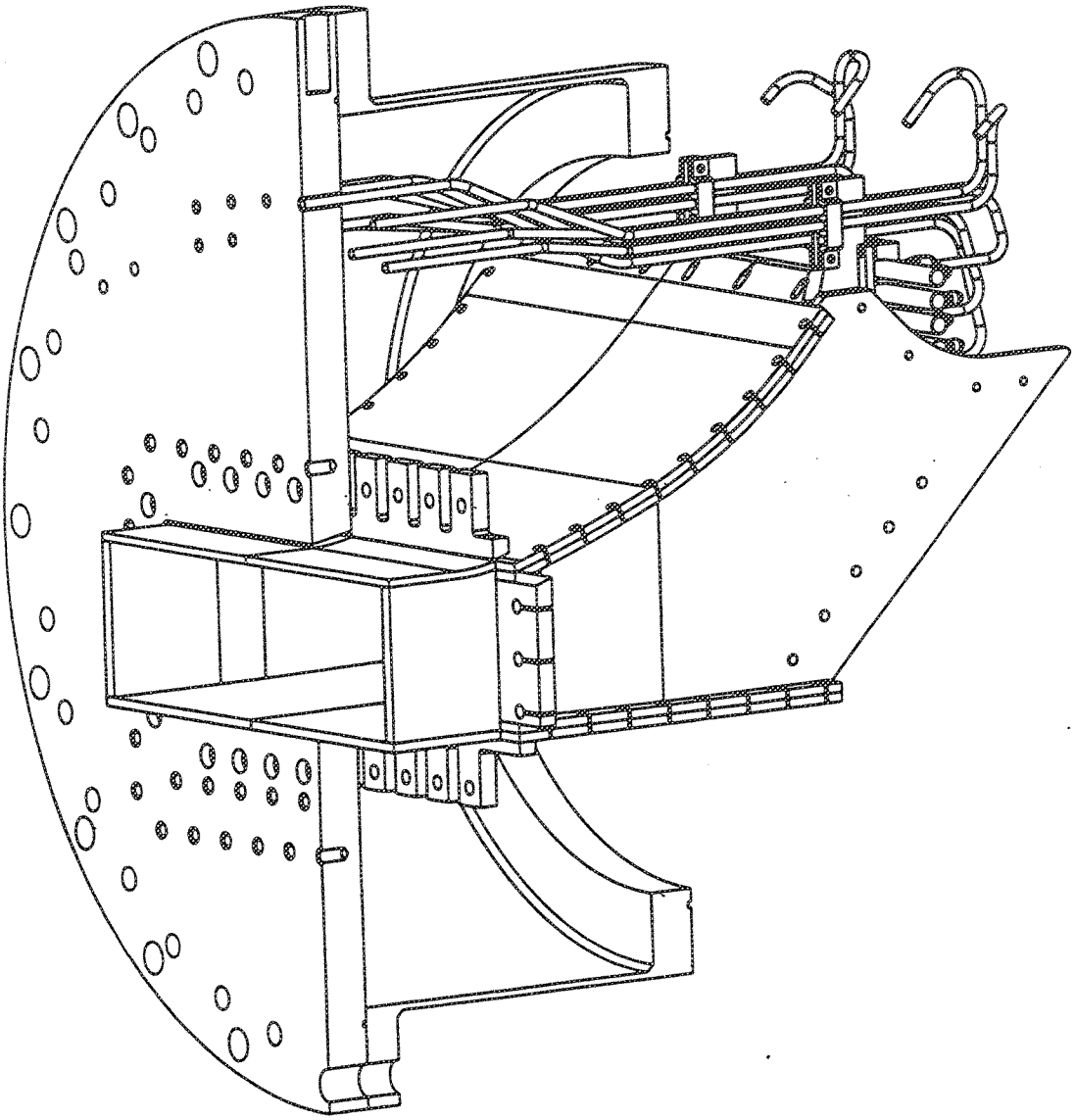

Figure 4. MRA 2D Sector Installed on Mounting Plate

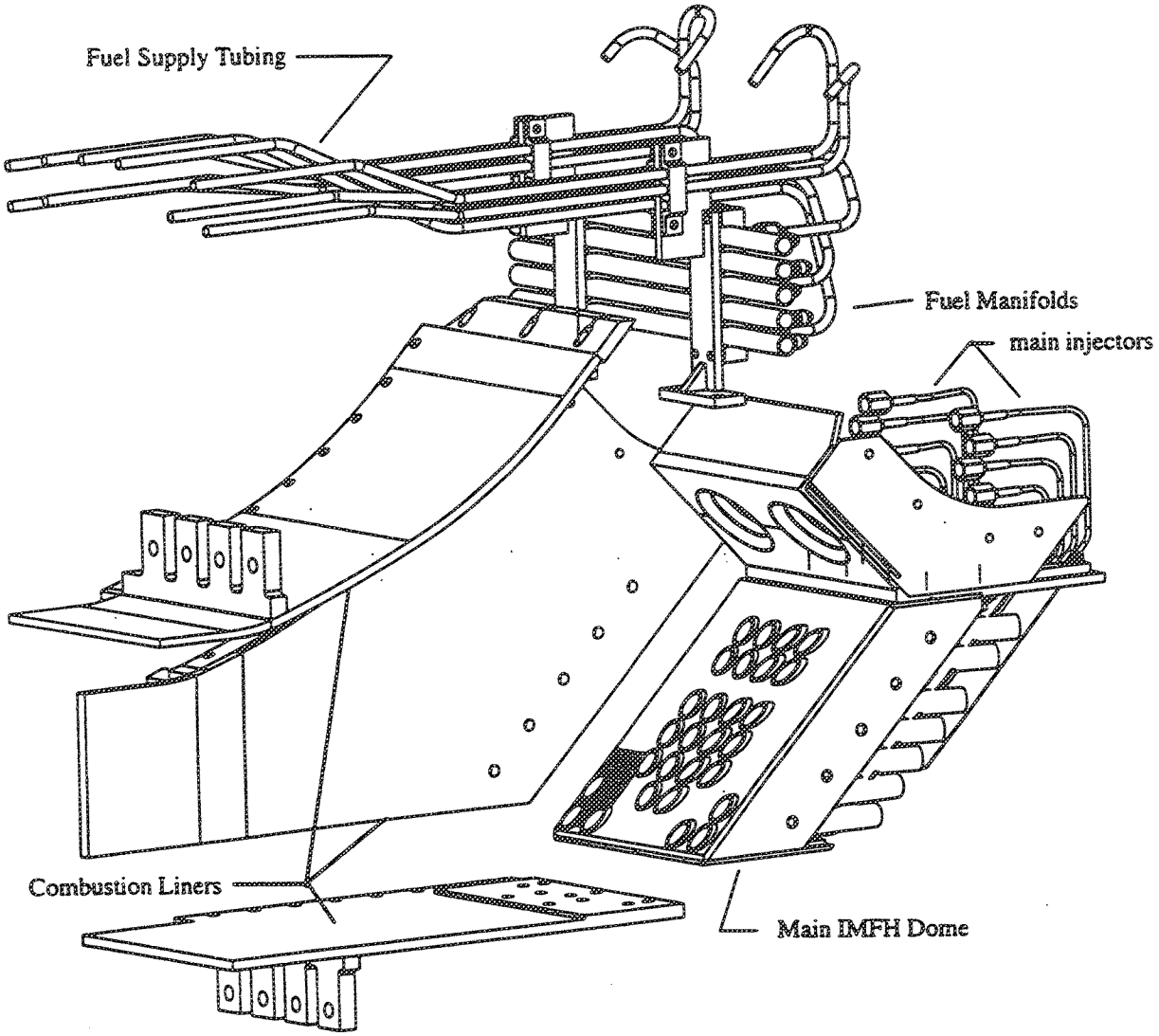

Figure 5. MRA 2D Sector Exploded View

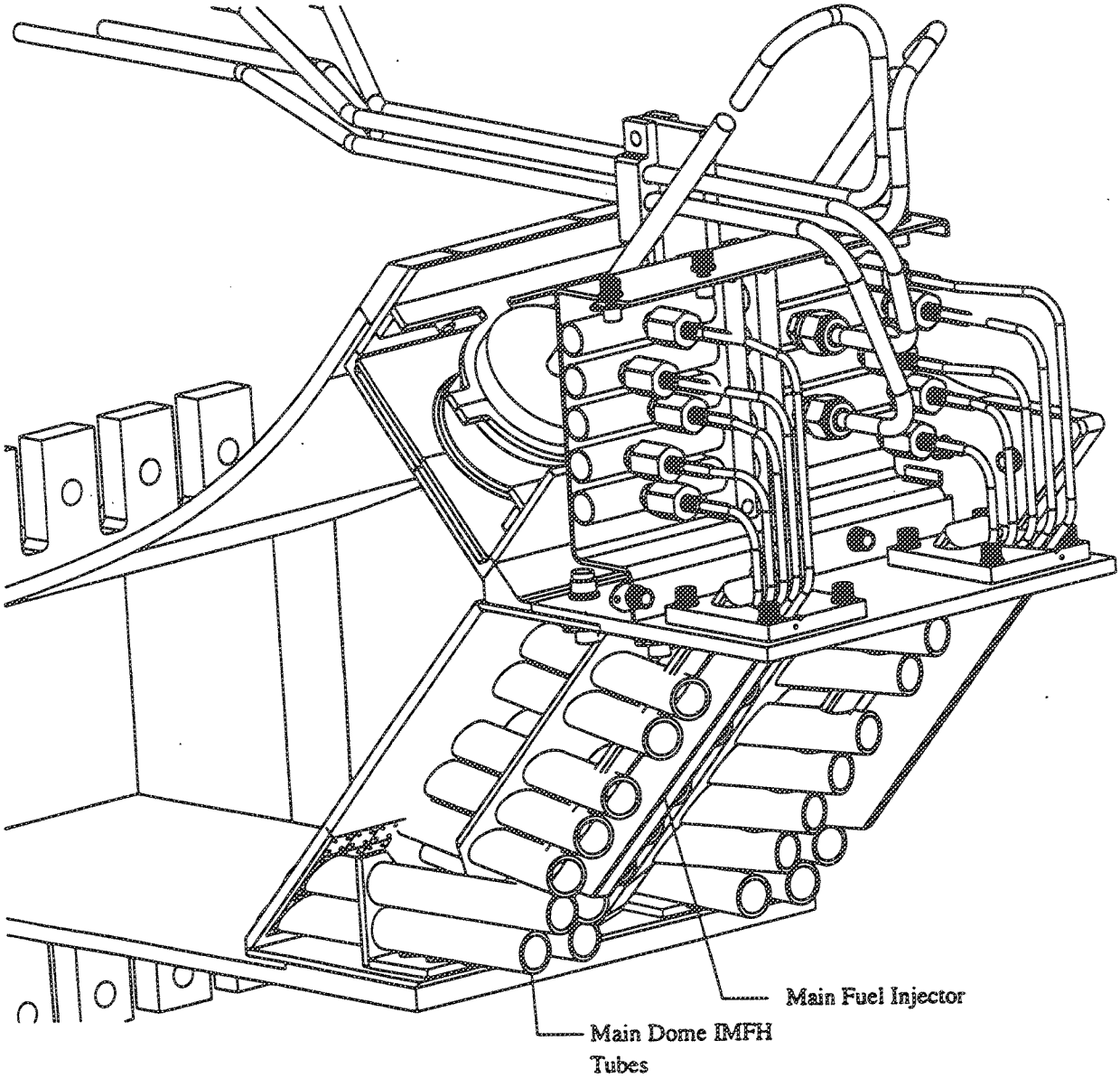

Figure 6. MRA 2D Sector - Aft Looking Forward Section Showing Two Cups

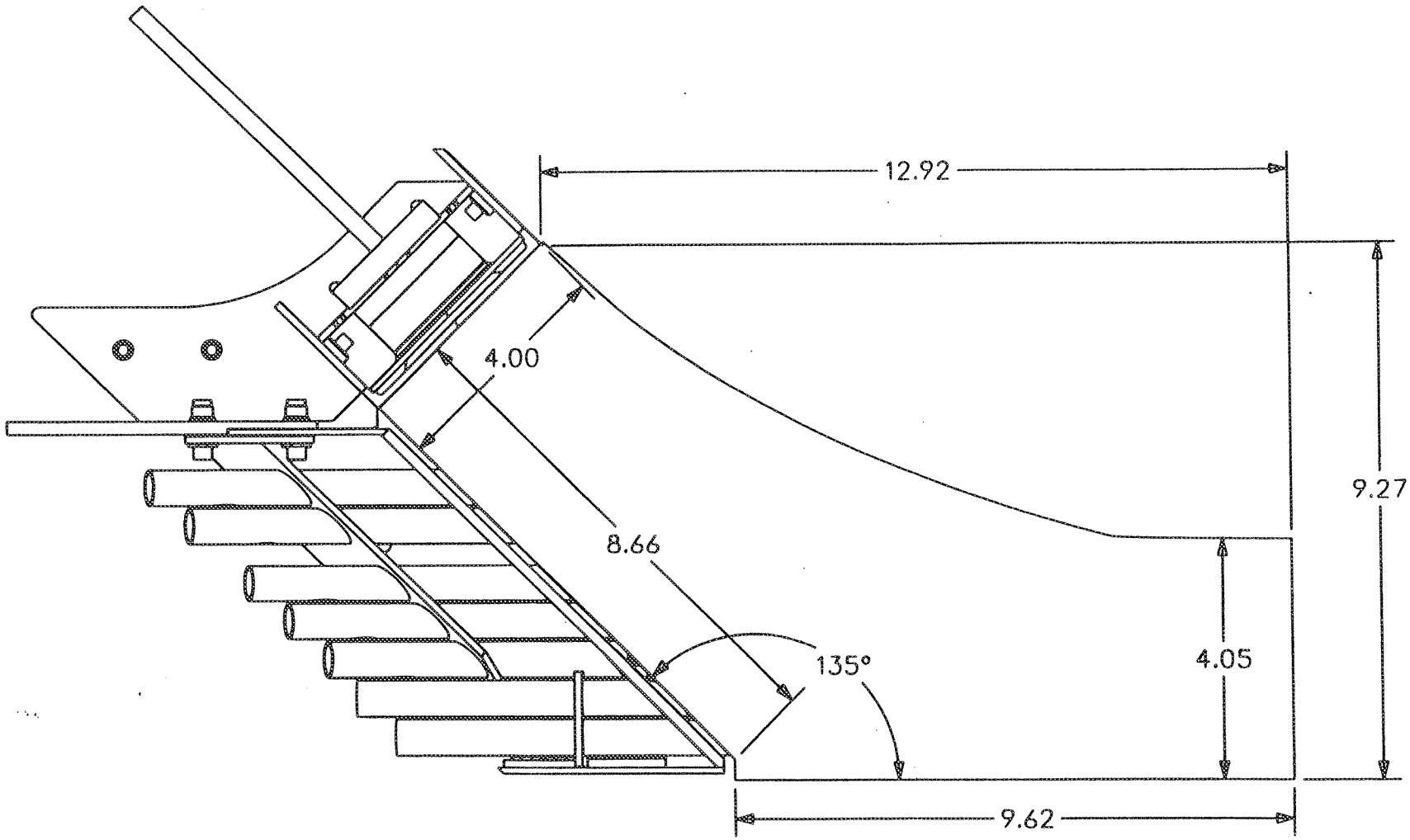

Figure 7. Overall Dimensions of the MRA 2D Highly Mixed Sector

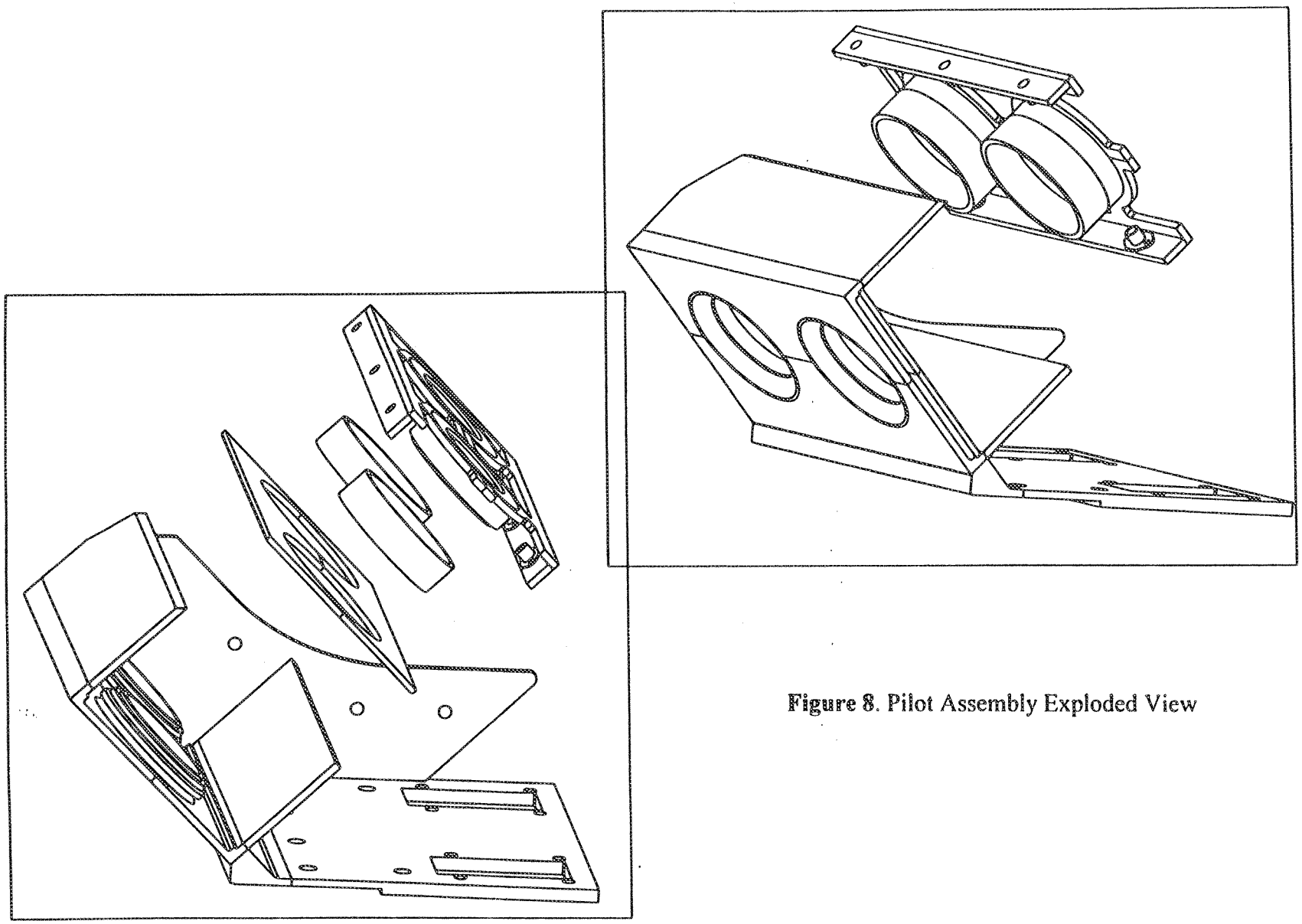

Figure 8. Pilot Assembly Exploded View

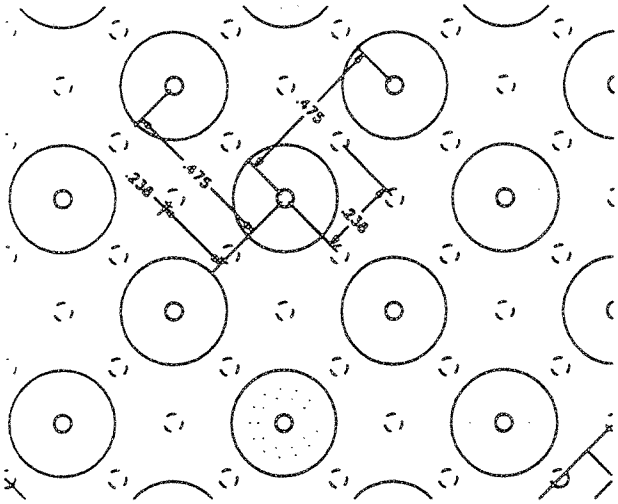

Plan View of Dimples

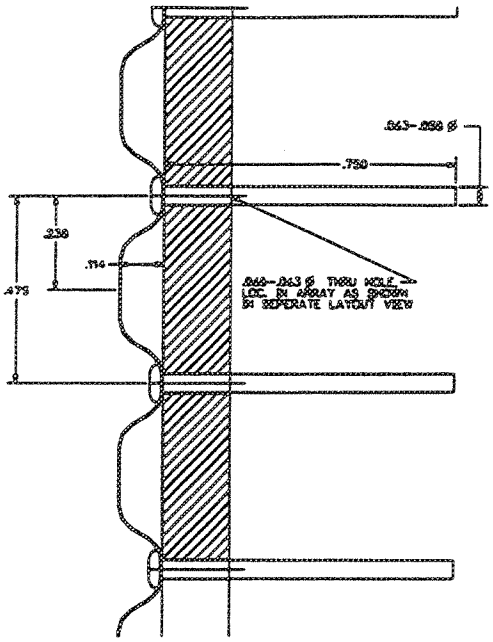

Cross sectional view showng attaching rivets

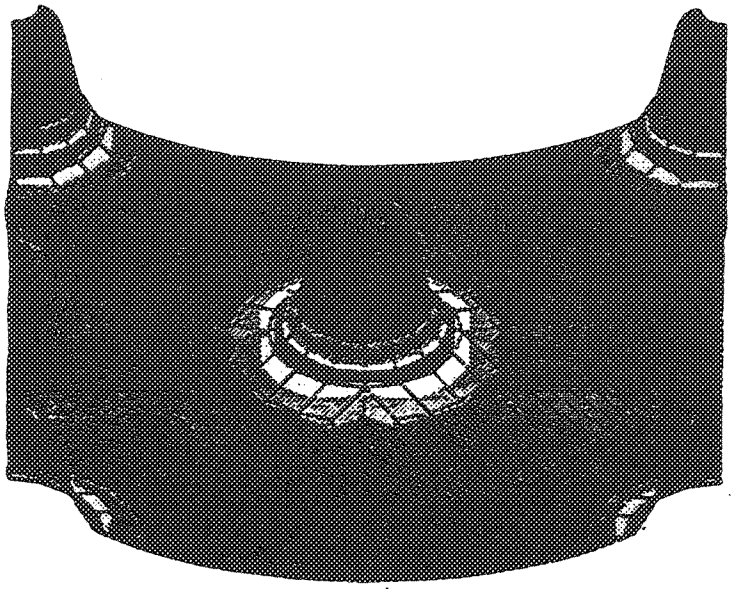

ANSYS Model

Figure 9. Dimpled Liner Details

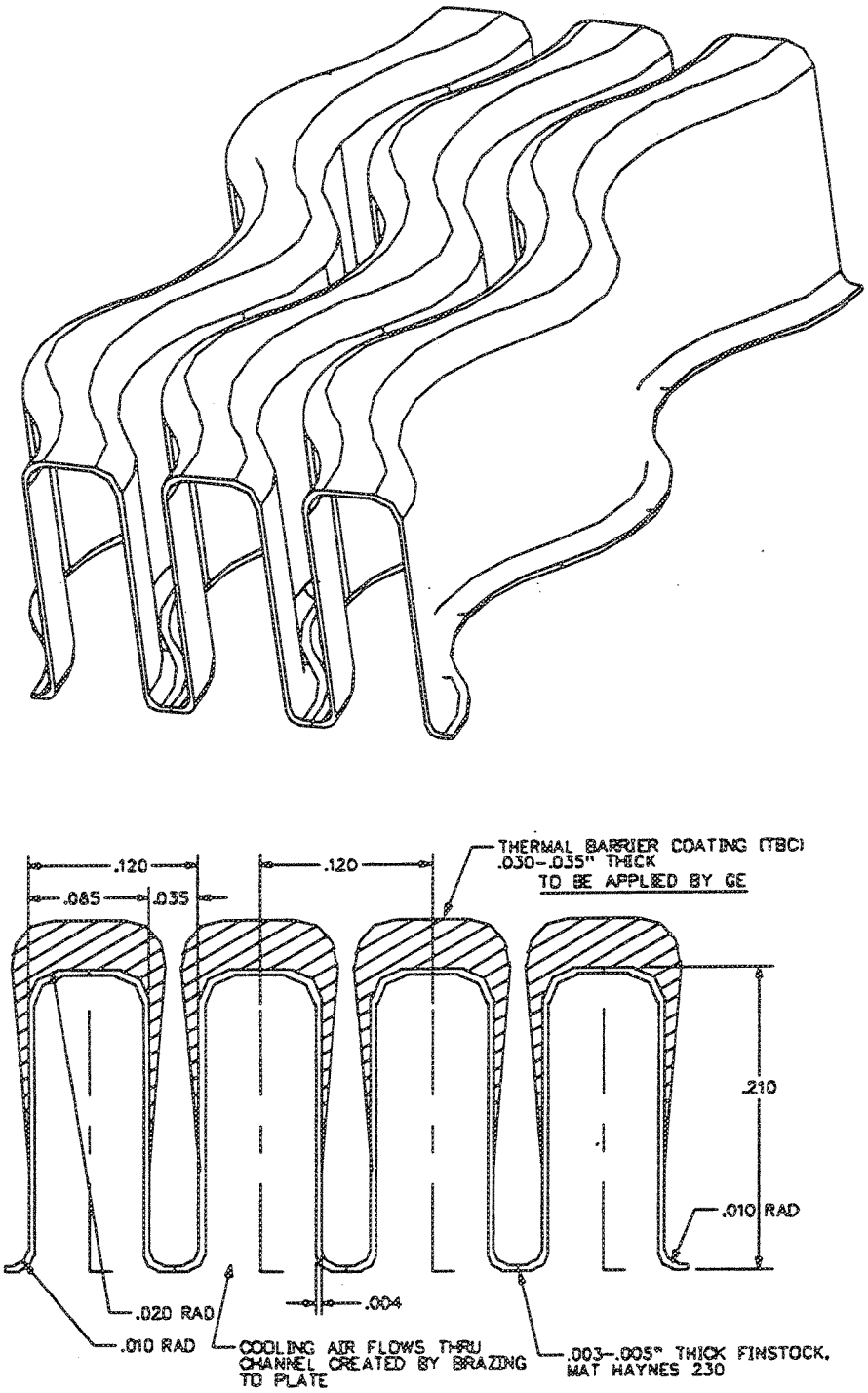

Figure 10. Compliant Liner Details

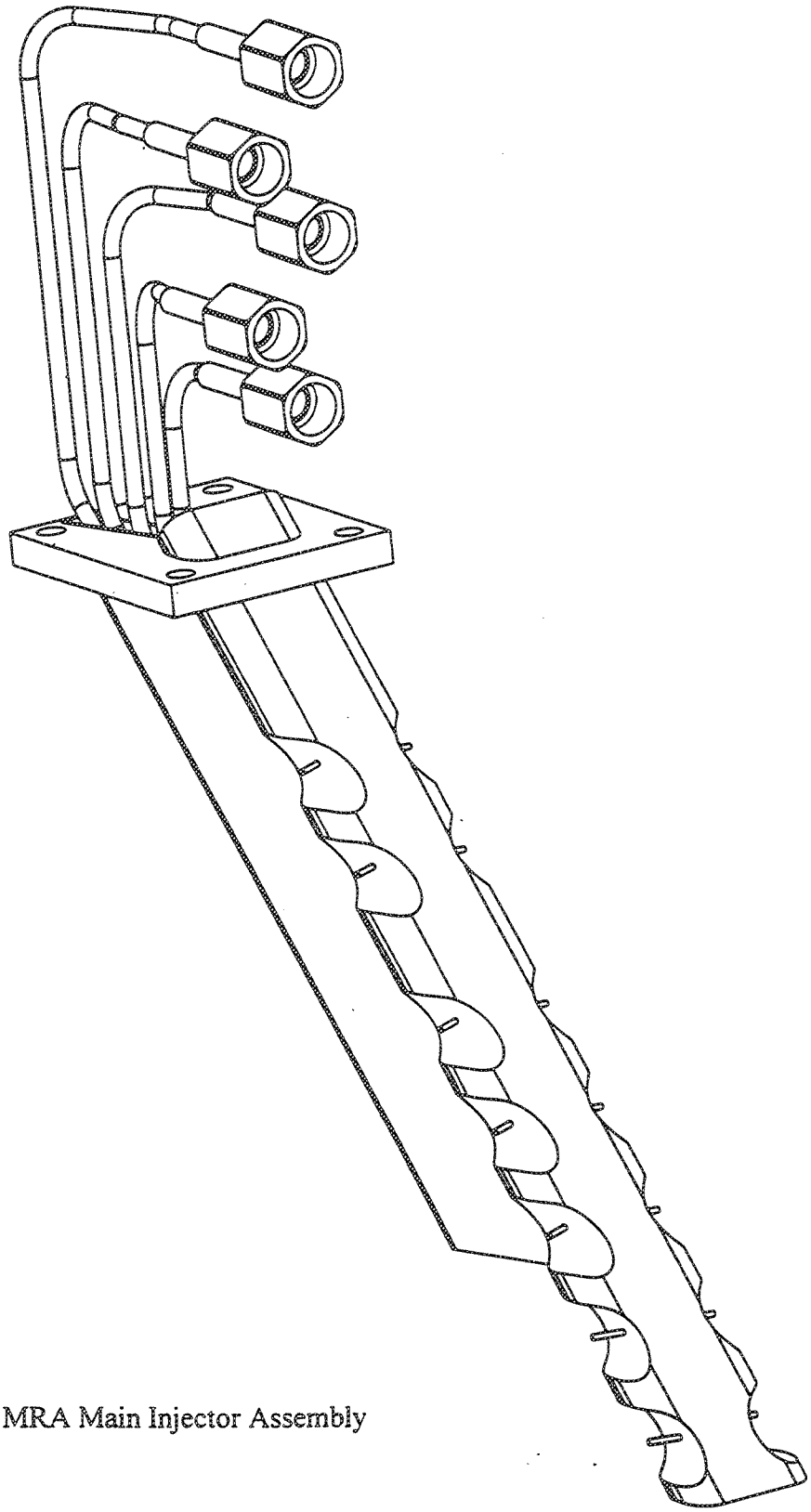

Figure 11. MRA Main Injector Assembly

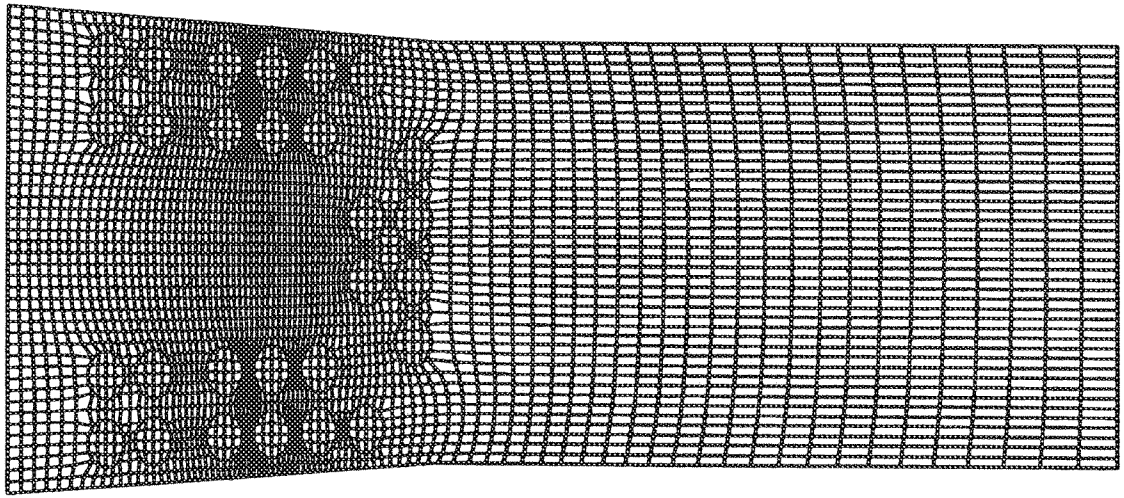

Figure 12. MRA 2D Sector CONCERT3D Grid - Top View

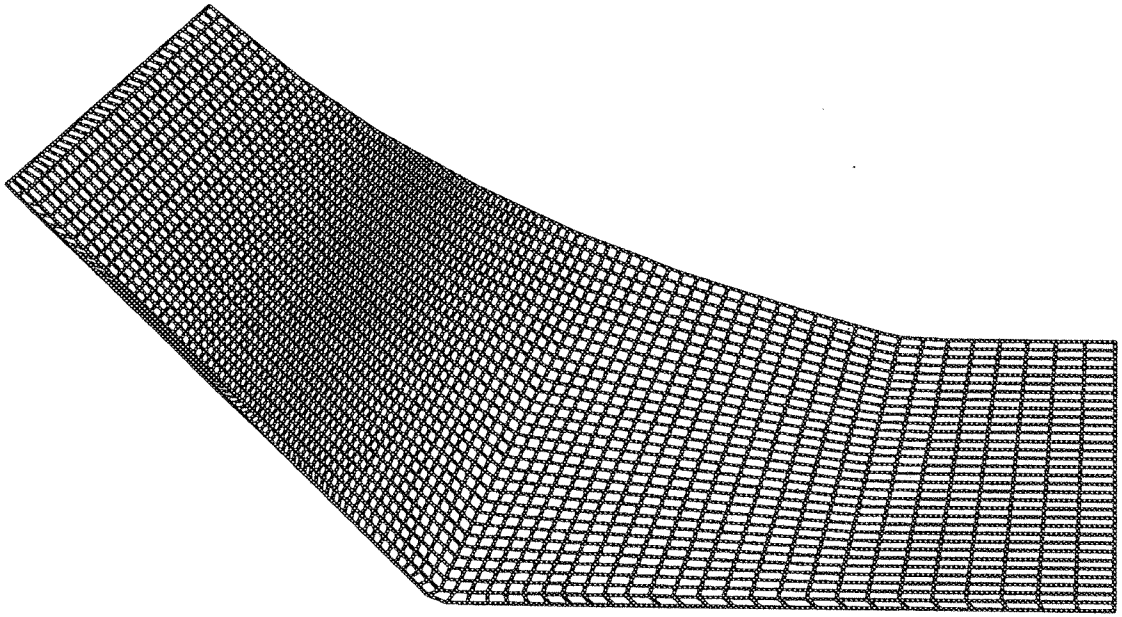

Figure 13. MRA 2D Sector CONCERT3D Grid - Side View

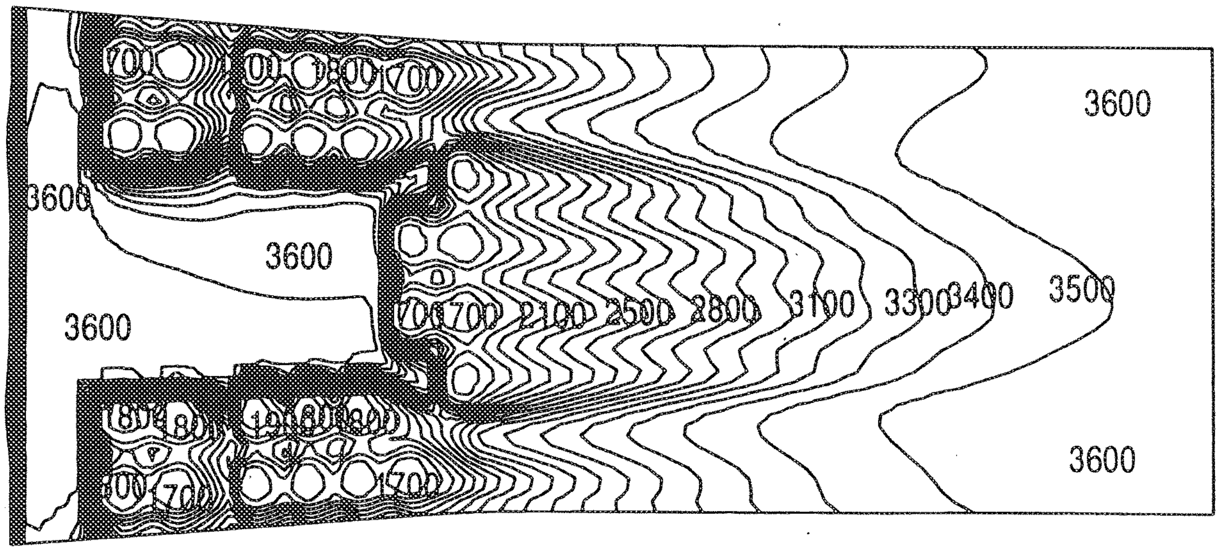

Figure 14. MRA 2D Sector Temperature Distribution (R) - Plane 2 (Top View)

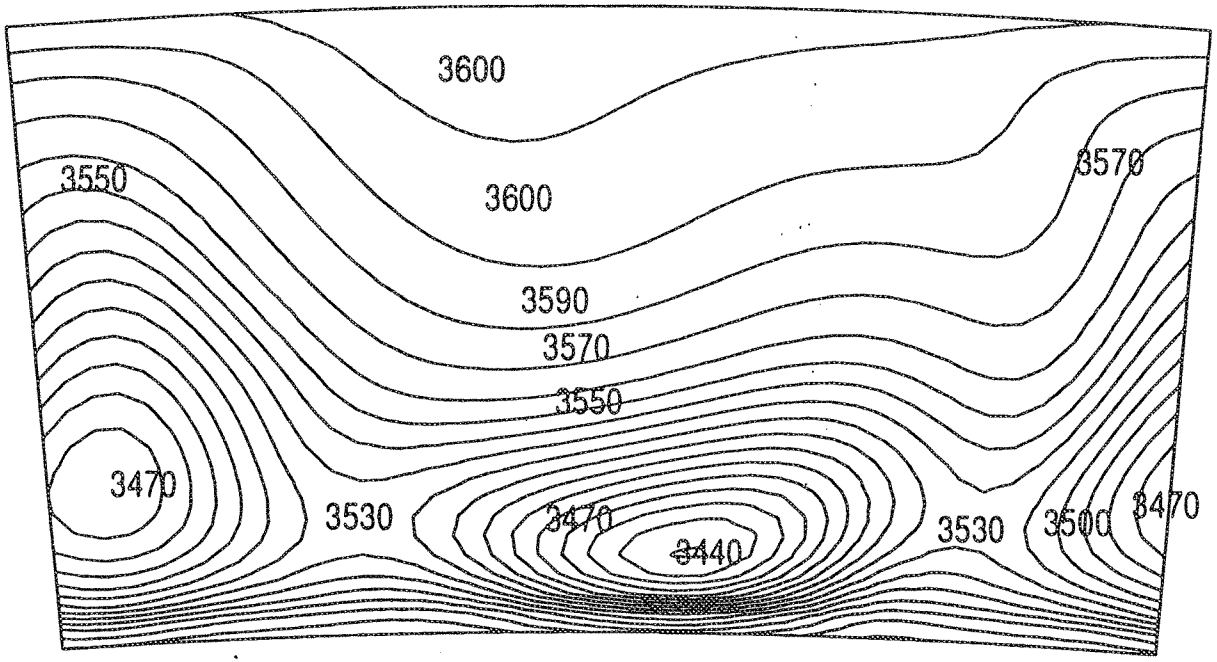

Figure 15. MRA 2D Sector Temperature Distribution (R) - Plane 86 (End View)

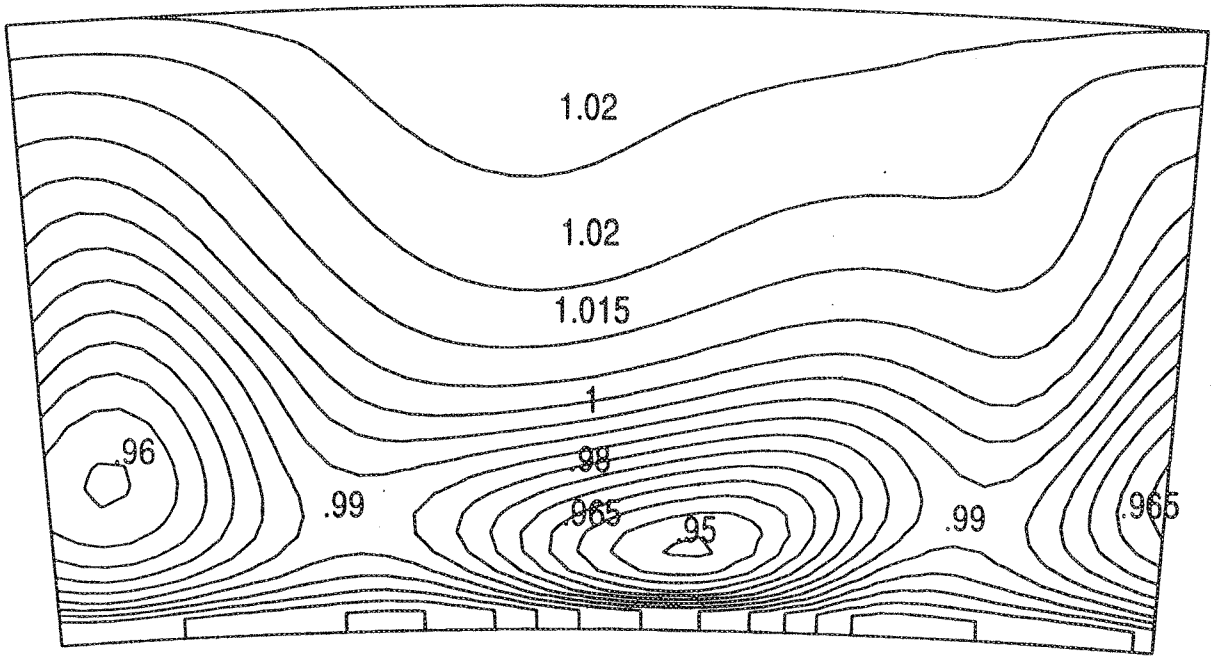

Figure 16. MRA 2D Sector Pattern Factor - Plane 86 (End View)

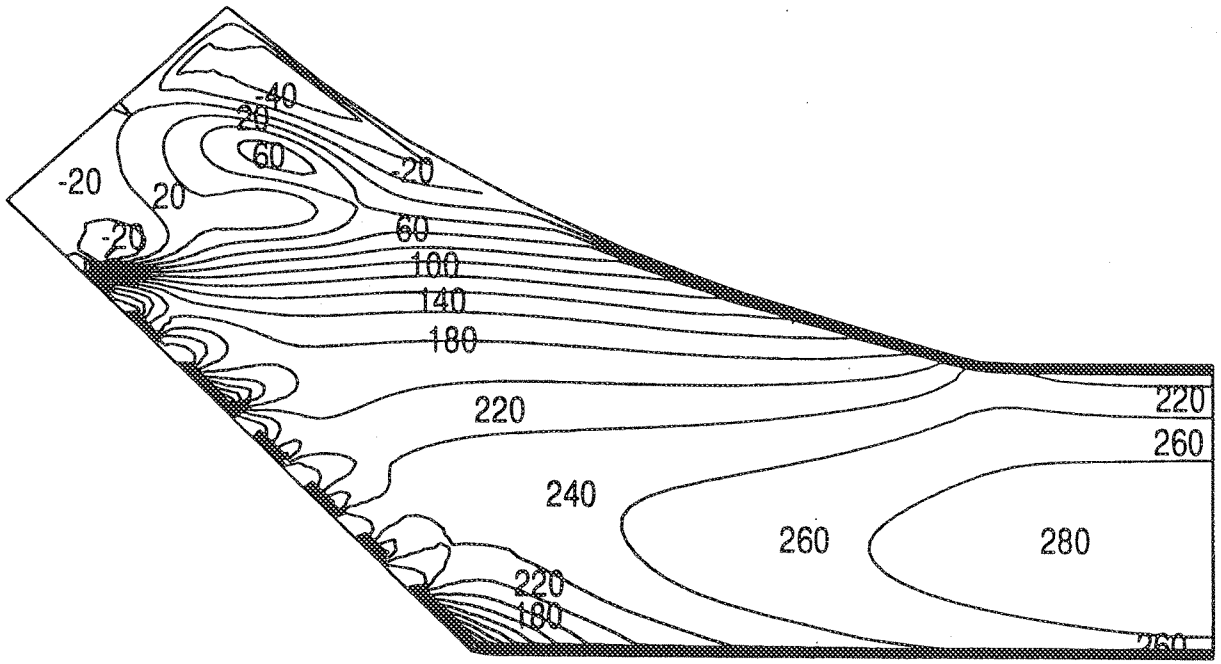

Figure 17. MRA 2D Sector x-Velocity Distribution (ft/sec) - Plane 5 (Side View)

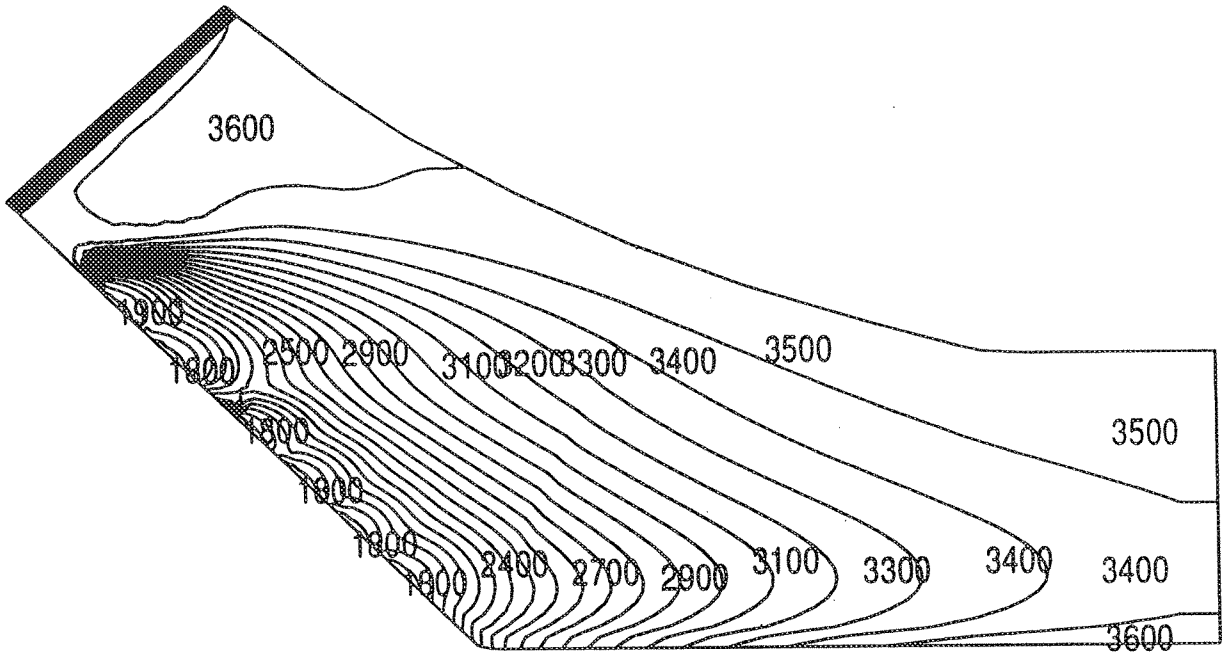

Figure 18. MRA 2D Sector Temperature Distribution (R) - Plane 5 (Side View)

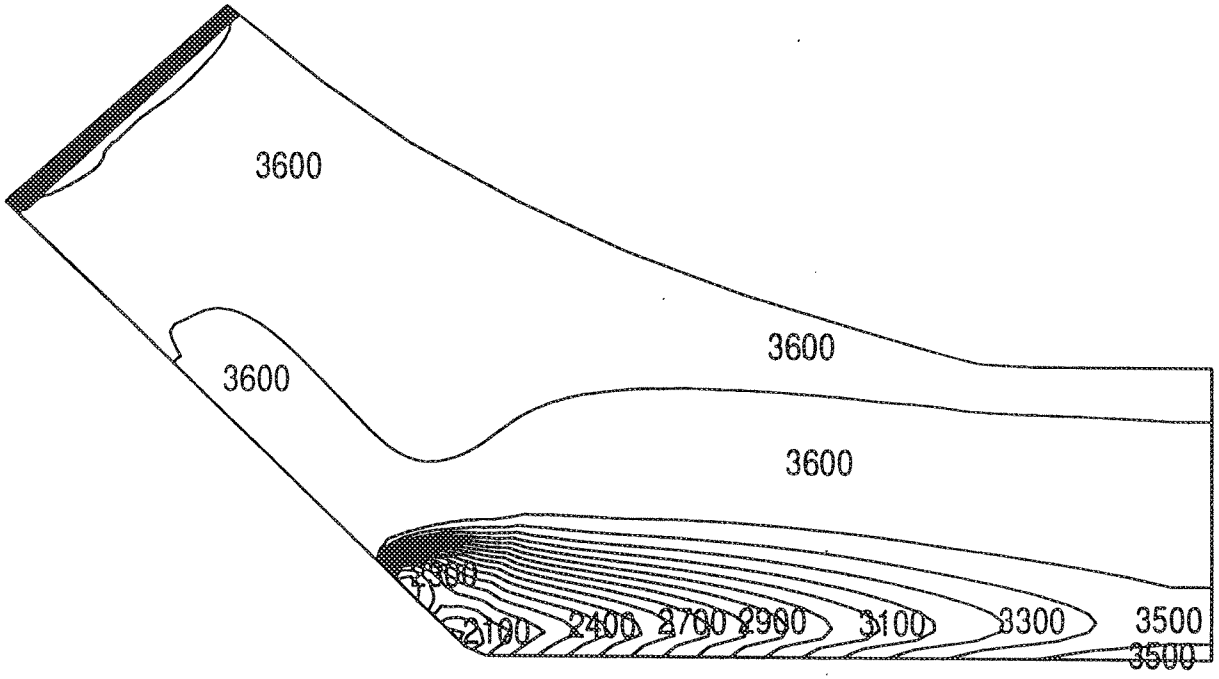

Figure 19. MRA 2D Sector Temperature Distribution (R) - Plane 22 (Side View)

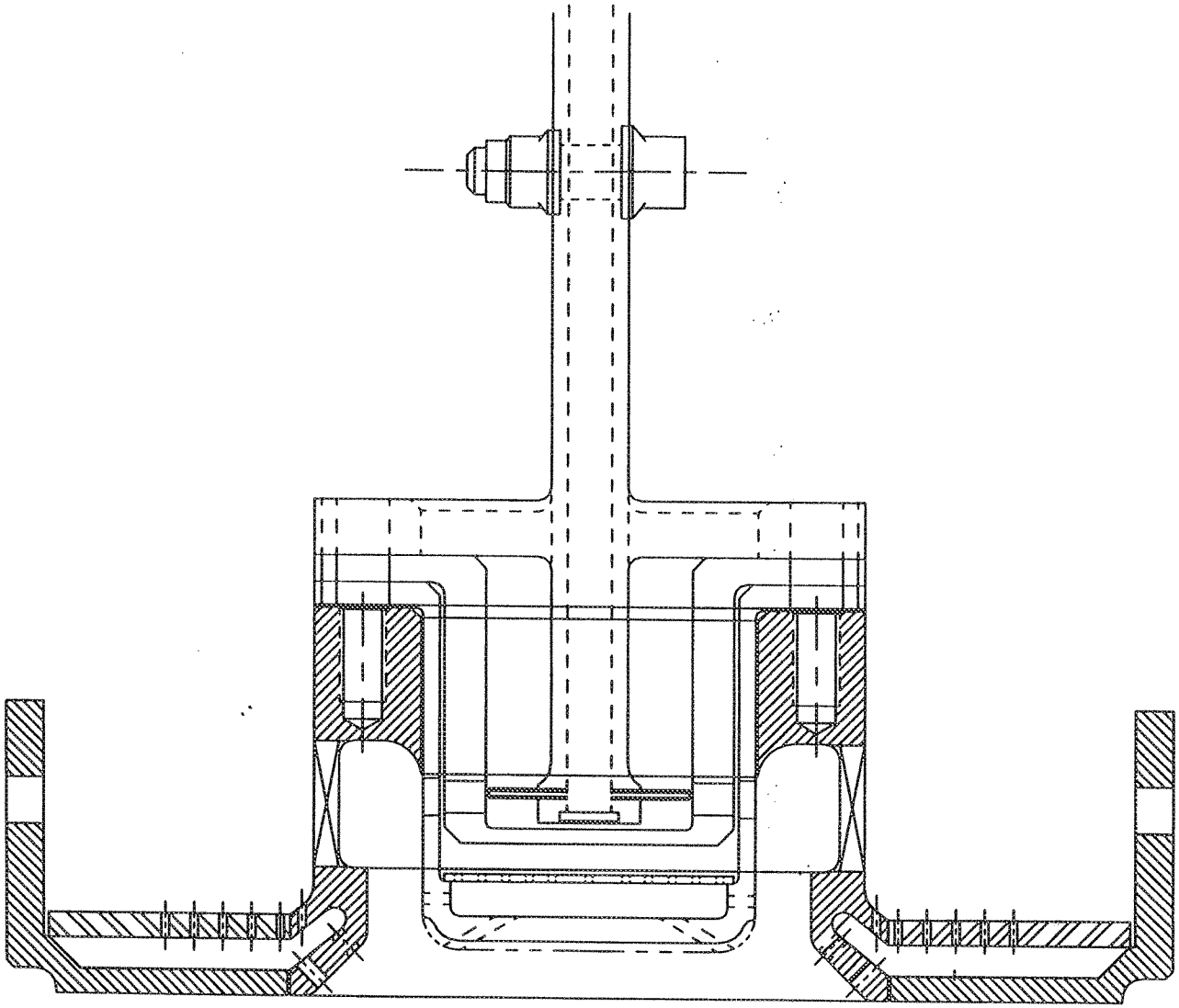

Figure 20. Swirl-cup Configuration for the SwRI Tests (Corresponding to GEAE Configurations 4 and 7)

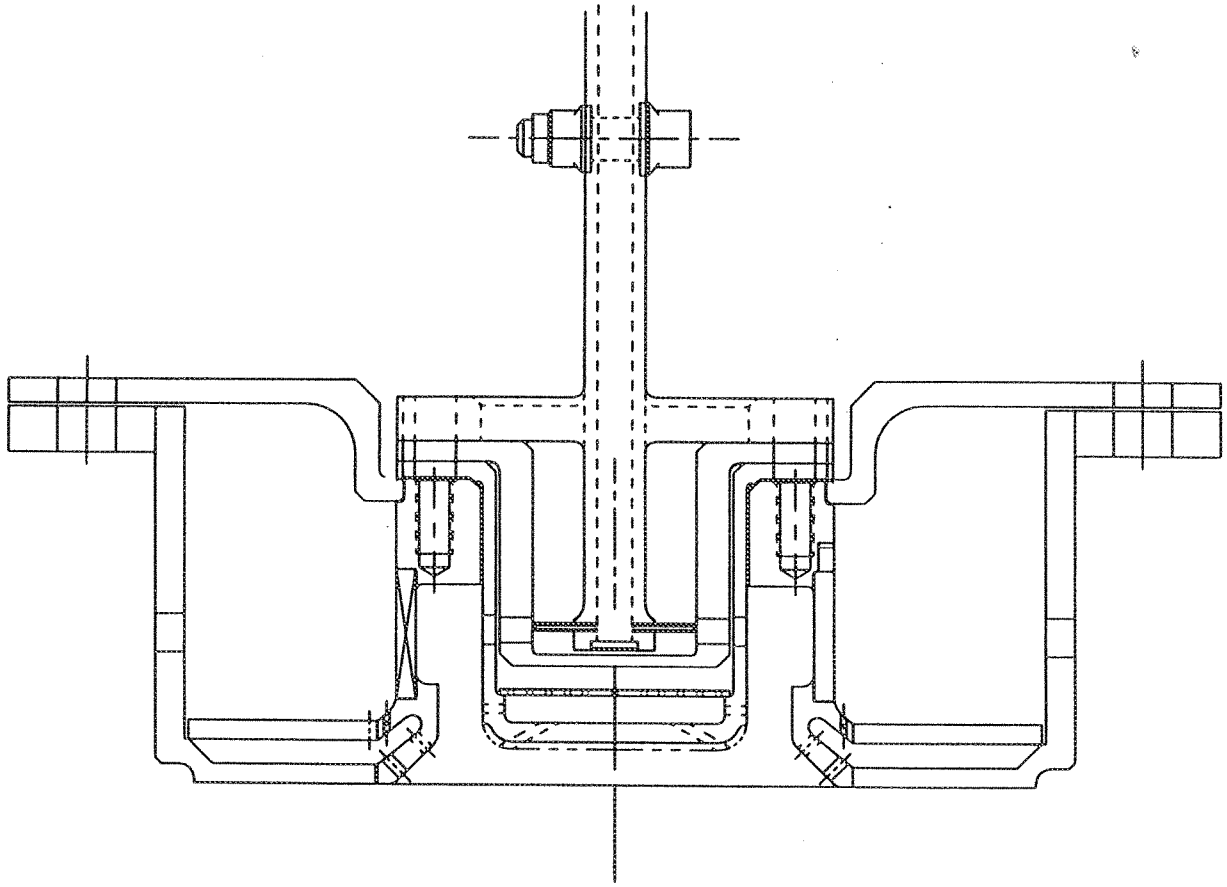

Figure 21. Swirl-cup Configuration for the SwRI Tests (Corresponding to GEAE Configurations 11 and 14)

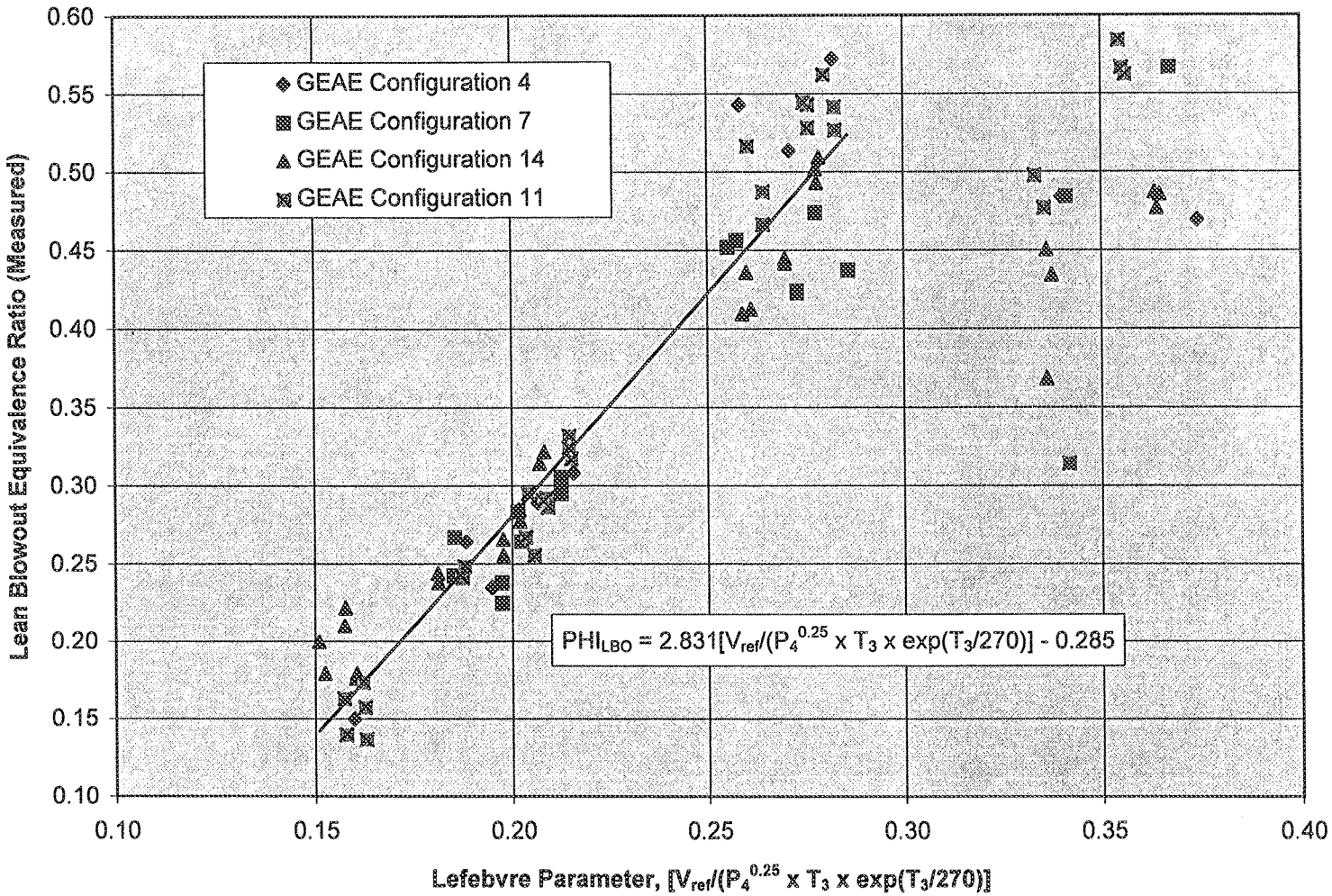

Figure 22. Lean Blowout Limits for All Four Dome Configurations

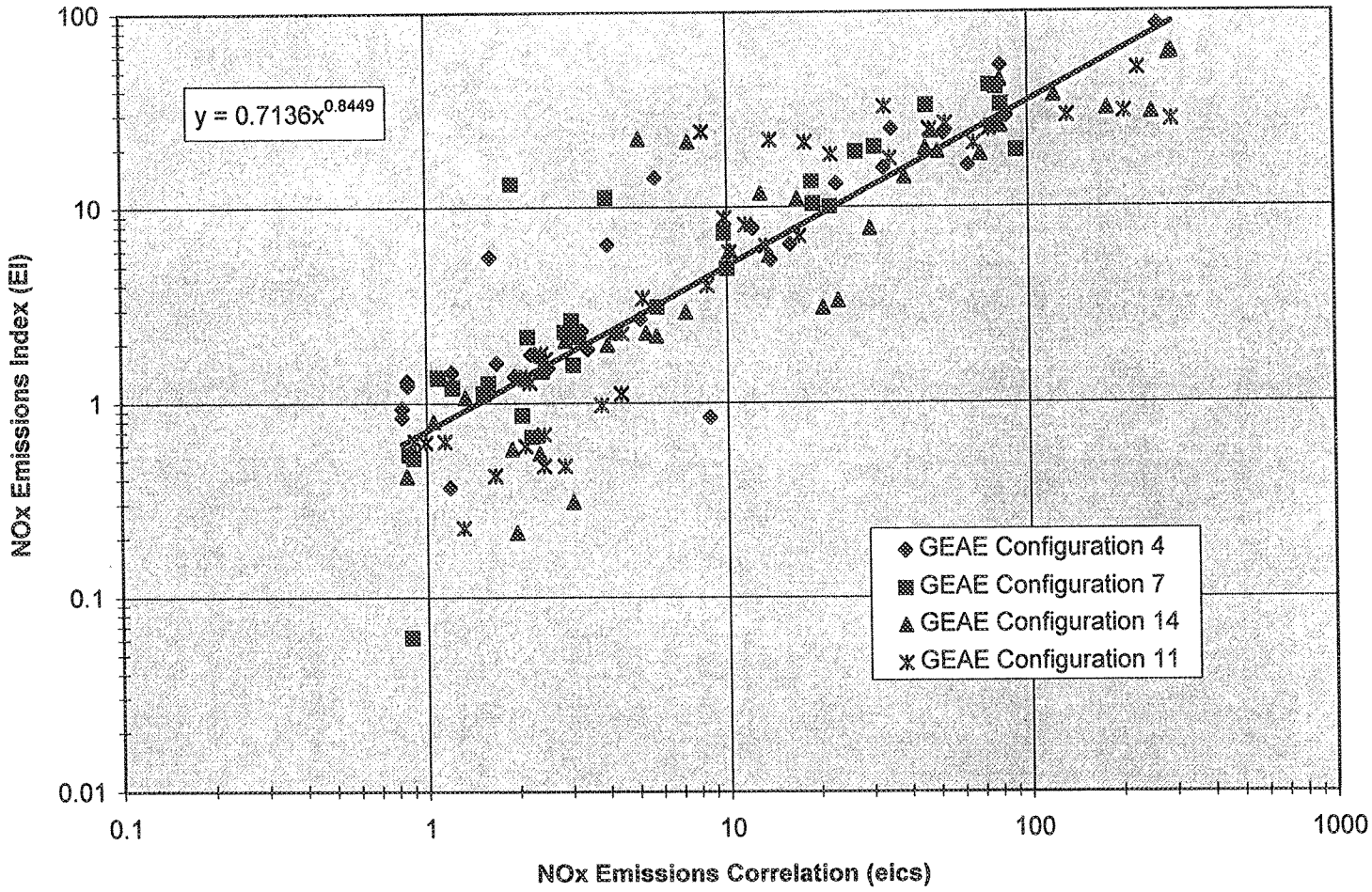

Figure 23. NOx Emissions Data

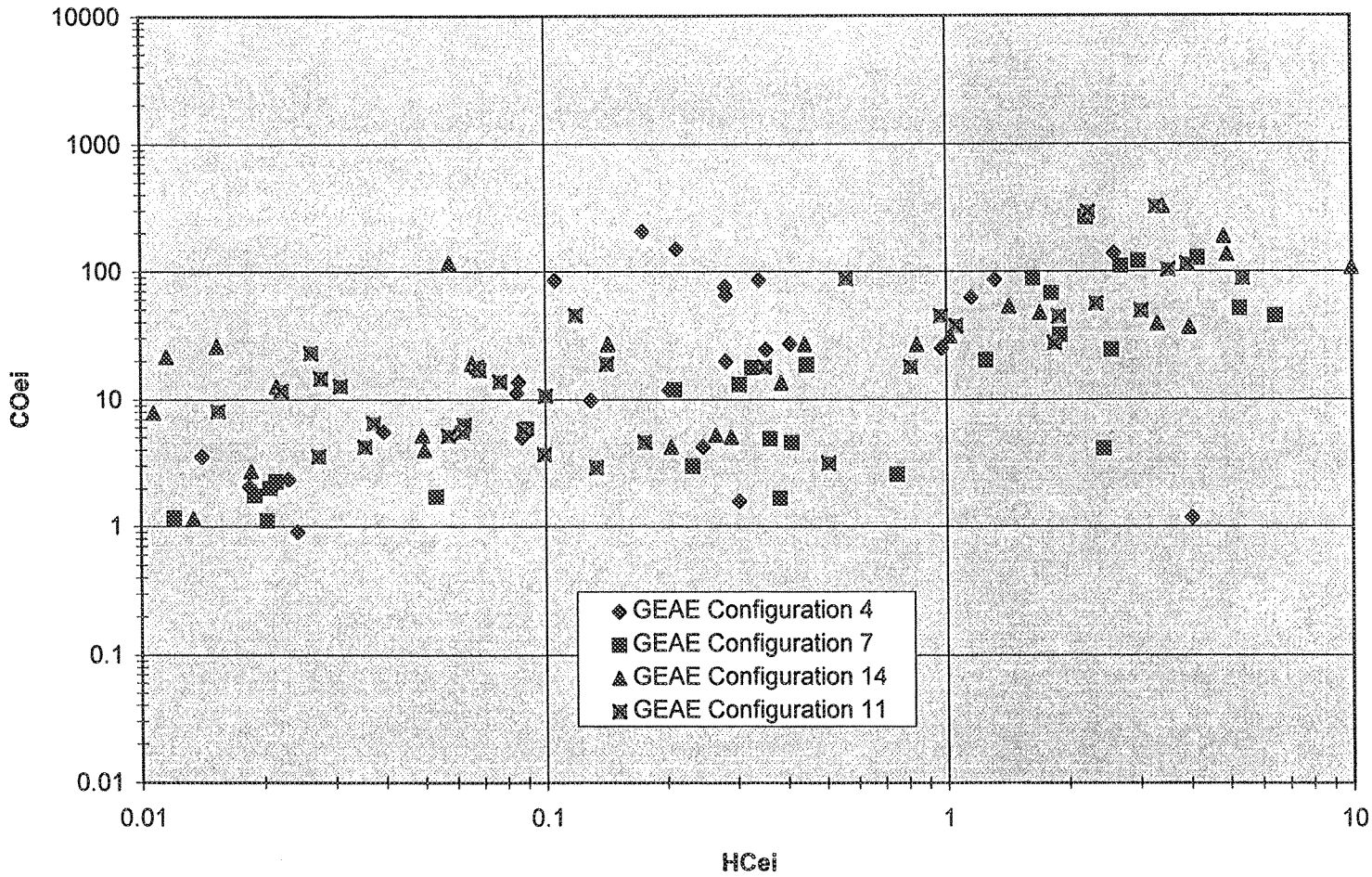

Figure 24. Relationship Between the CO and Unburned Hydrocarbons Emissions

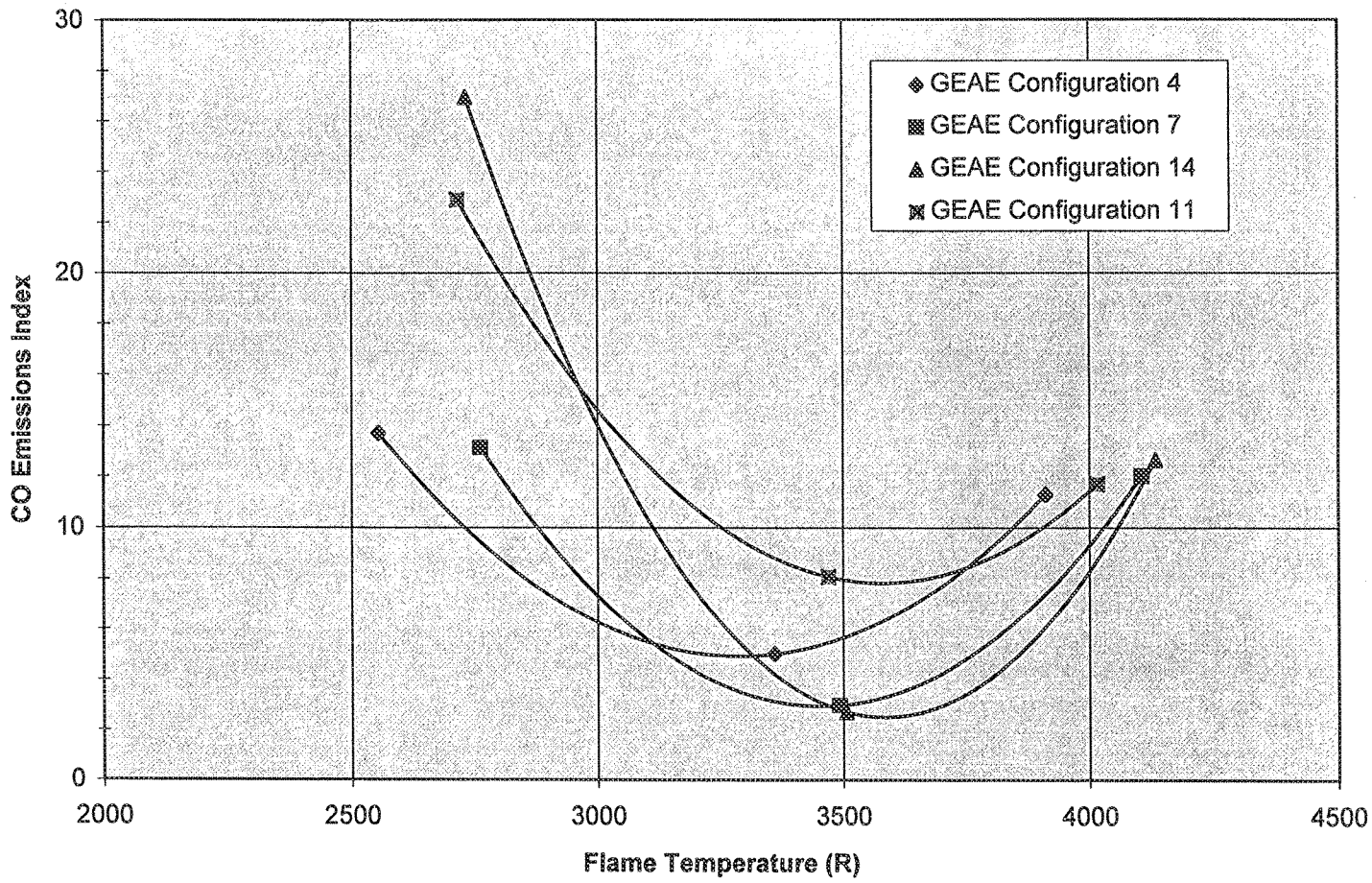

Figure 25. CO Emissions as a Function of Flame Temperature
(P_3=60 psia, T_3=1050 F)

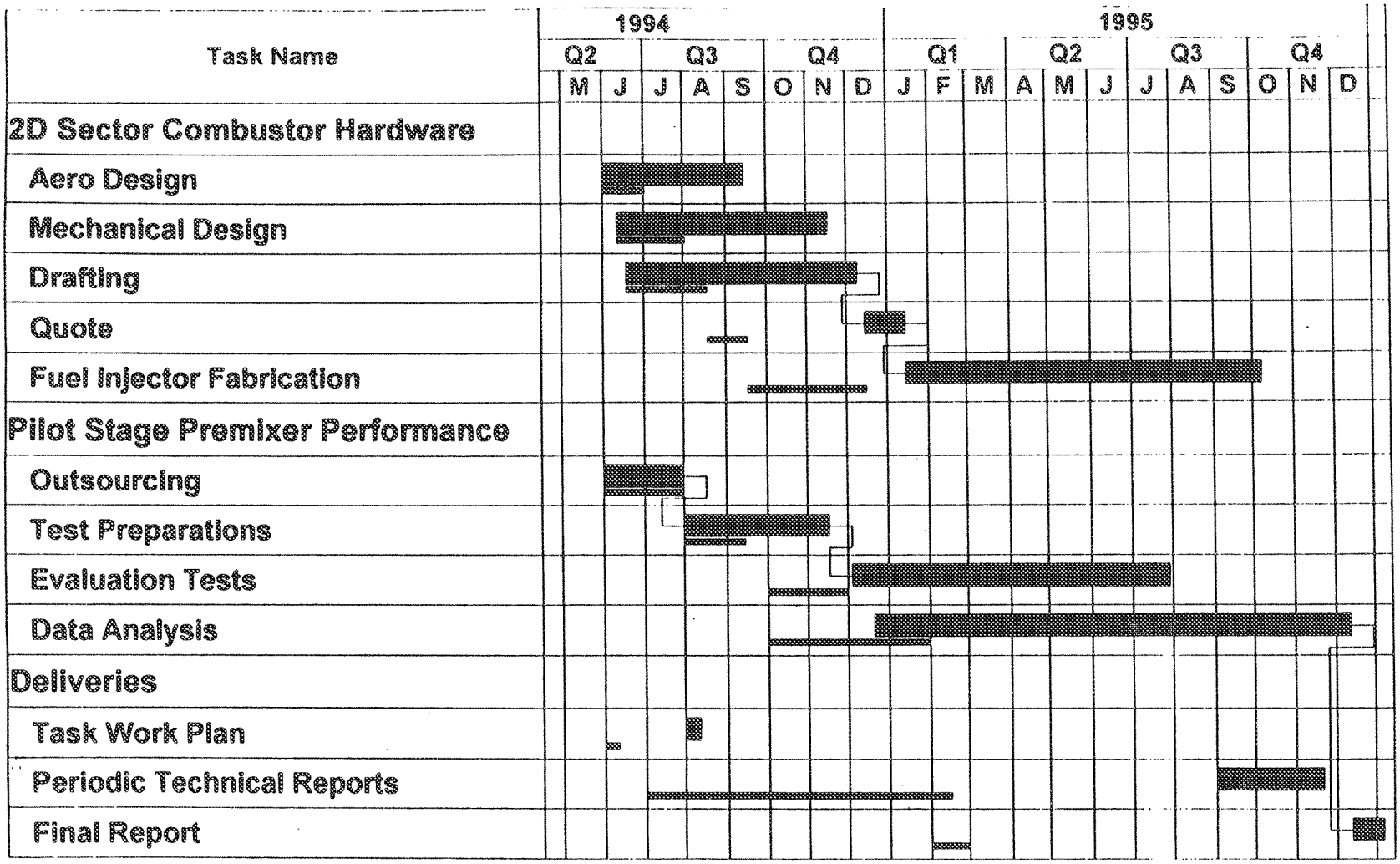

Figure 26. Completed LET Task 43 Schedule

APPENDIX A

SwRI Dome 1 Data (GEAE Configuration 4)

SUMMARY OF TEST DATA FOR HSCT CYCLONE SWIRLERS

Test Dome #1

OPERATING CONDITIONS

Test Point	Date	Air Pres psia		Air Temp deg F		Air Flow lbm/s			Fuel Flow lbm/min			F/A		DP(dome) %Pa	
		Desired	Actual	Desired	Actual	Desired	(note 1)	Actual	Desired	(note 2)	Actual	Desired	Actual	Desired	Actual
0	1/27/95	15	26.6	70	99.7	0.087	0.150	0.156	0.320	0.577	0.574	0.0616	0.0613	4	5.5
1	1/27/95	15	26.6	70	97.1	0.087	0.150	0.157	0.250	0.451	0.457	0.0479	0.0485	4	5.3
2	1/27/95	15	26.8	70	94.6	0.087	0.152	0.149	0.178	0.305	0.297	0.0342	0.0332	4	3.6
3	1/27/95	15	28.3	70	101.4	0.053	0.097	0.099	0.197	0.367	0.366	0.0618	0.0616	1.5	4.1
4	1/27/95	15	28.2	70	101.3	0.053	0.097	0.101	0.153	0.292	0.289	0.0482	0.0477	1.5	2.6
5	1/27/95	15	28.2	70	99.9	0.053	0.097	0.101	0.110	0.210	0.206	0.0346	0.0340	1.5	2
6	1/27/95	15	27.2	450	454.2	0.067	0.121	0.124	0.218	0.404	0.401	0.0543	0.0539	4	8.2
7	1/27/95	15	27.5	450	451.9	0.067	0.123	0.115	0.163	0.280	0.279	0.0406	0.0404	4	2.8
8	1/27/95	15	27.5	450	450.2	0.067	0.123	0.115	0.108	0.186	0.187	0.0269	0.0271	4	2.6
9	1/27/95	15	28.7	450	451.6	0.041	0.078	0.073	0.133	0.237	0.237	0.0542	0.0541	1.5	2.5
10	1/27/95	15	28.6	450	447.9	0.041	0.078	0.077	0.100	0.188	0.184	0.0407	0.0398	1.5	1.58
11	1/27/95	15	28.6	450	446.6	0.041	0.078	0.077	0.067	0.125	0.122	0.0271	0.0264	1.5	0.66
12	1/30/95	60	59.8	450	455	0.267	0.265	0.258	0.873	0.844	0.859	0.0545	0.0555	4	6.7
13	1/30/95	60	59.4	450	454	0.267	0.264	0.266	0.655	0.653	0.664	0.0409	0.0416	4	4.8
14		60		450		0.267	0.000		0.437	0.000		0.0273		4	
15	1/31/95	60	60.2	850	852	0.222	0.223	0.224	0.727	0.733	0.741	0.0546	0.0551	4	4.3
16	1/31/95	60	60.2	850	853	0.222	0.222	0.232	0.545	0.570	0.562	0.0409	0.0404	4	5
17		60		850		0.222	0.000		0.363	0.000		0.0273		4	
18	1/31/95	60	60.2	1050	1049	0.207	0.208	0.2	0.593	0.573	0.569	0.0478	0.0474	4	3.7
19	1/31/95	60	59.7	1050	1051	0.207	0.206	0.207	0.423	0.423	0.429	0.0341	0.0345	4	4.2
20	1/31/95	60	59.9	1050	1045	0.207	0.207	0.206	0.253	0.252	0.251	0.0204	0.0203	4	3.7
21	2/1/95	150	148.7	850	848	0.555	0.551	0.557	1.818	1.825	1.823	0.0546	0.0545	4	4.3
22	2/1/95	150	148.8	850	850	0.555	0.551	0.551	1.363	1.354	1.370	0.0409	0.0414	4	4
23	2/1/95	150	151.7	850	850	0.555	0.561	0.545	0.910	0.894	0.971	0.0273	0.0297	4	3.7
24	2/1/95	150	148.8	1200	1202	0.493	0.489	0.483	1.413	1.385	1.386	0.0478	0.0478	4	3.8
25	2/1/95	150	151.2	1200	1204	0.493	0.496	0.493	1.010	1.010	1.010	0.0341	0.0341	4	3.7
26	2/1/95	150	153	1200	1202	0.493	0.503	0.487	0.605	0.598	0.611	0.0205	0.0209	4	3.4
27	2/7/95	250	251.2	850	856	0.926	0.928	0.912	2.652	2.612	2.449	0.0477	0.0448	4	4.04
28	2/7/95	250	249.3	850	855.8	0.926	0.921	0.932	1.895	1.907	1.865	0.0341	0.0334	4	4.16
29	2/7/95	250	256.6	850	856.2	0.926	0.948	0.92	1.137	1.129	1.103	0.0205	0.0200	4	3.69
30		250		1200		0.822	0.000		2.355	0.000		0.0477	#DIV/0!	4	
31		250		1200		0.822	0.000		1.683	0.000		0.0341	#DIV/0!	4	
32		250		1200		0.822	0.000		1.010	0.000		0.0205	#DIV/0!	4	
33		250		1200		0.65	0.000		1.862	0.000		0.0477	#DIV/0!	2.5	
34		250		1200		0.65	0.000		1.330	0.000		0.0341	#DIV/0!	2.5	
35		250		1200		0.65	0.000		0.798	0.000		0.0205	#DIV/0!	2.5	

TEST POINT		Calc. f/a from Emissions	Comb. Efficiency	EXHAUST GAS ANALYSIS NO ppm	NOx ppm	CO ppm	CO2 %	HC ppm	O2 %	DOME TEMPERATURES FACE #1 F	FACE #2 F	INJ #1 F	INJ #2 F	FUEL LINE F	fars/farm
0		0.0602	95.1	55.5	70	13473	11.8	20	3.3	100	497	76	171	75	0.982
1		0.0465	97.89	33	45	4430	10	31	7.5	97	509	76	169	75	0.958
2		0.0293	97.58	14	16	2690	6	72	12.6	96	367	76	150	76	0.882
3		0.0602	97.95	88.5	93	5530	12.5	12	2.9	137	462	76	126	75	0.977
4		0.048	96.4	47	52	8057	10	20	7.2	117	467	76	152	74	1.007
5		0.0327	98.4	25	28.5	2356	7.1	18	12	103	403	75	147	74	0.962
6		0.0524	99.3	88	93	1382	11.2	35	5.2	423	605	87	150	80	0.972
7		0.0395	99.11	30	35	1067	8.4	72	9.3	412	538	88	146	81	0.977
8		0.0206	95.99	12	12.5	3028	4.1	100	15.3	411	350	89	125	81	0.760
9		0.0563	98.09	280	300	4792	12.2	31	4.3	430	662	90	156	83	1.040
10		0.0392	99.23	38	41	1224	8.91	32	10	423	543	91	169	84	0.984
11		0.0243	98.19	19.5	18.5	1541	4.82	50	13.5	417	453	91	170	84	0.920
12		0.055	99.66	21.5	34.5	804	13.5	24	4.8	436	725	78	636	73	0.991
13		0.043	99.82	45	57	210	10	21.5	8.7	432	625	79	546	74	1.034
14															
15		0.052	99.34	755	840	1091	10.9	27	4.9	817	913	91	804	80	0.943
16		0.0443	99.68	340	390	479	9.7	11	7.9	813	779	92	368	81	1.097
17															
18		0.0446	99.61	640	710	548	9.7	7.2	7.7	1025	932	99	295	87	0.941
19		0.0326	99.84	100	116	177	7.1	5.4	11.6	1019	802	96	261	84	0.944
20		0.0166	99.65	2	4	247	3.6	2.7	16.8	1021	586	100	204	88	0.817
21		0.0605	99.66	1900	2300	392	14.2	4.9	2.7	865	1053	105	380	95	1.109
22		0.0439	99.89	300	482	117	10	2	8.3	837	929	105	391	94	1.059
23		0.0304	99.9	210	250	34	5.8	204	10.7	835	746	105	291	94	1.024
24		0.0539	99.6	2400	3180	215	12.2	1.5	4.8	1193	1077	113	399	100	1.127
25		0.0366	99.86	490	720	83	8.1	1.3	10.4	1191	931	114	298	102	1.072
26		0.0183	99.95	60	74	17	3.8	0.8	15.2	1186	830	115	218	103	0.875
27		0.0483	99.824	340	525	83	10.6	28	6.5	888	888	128	337	88	1.079
28		0.0356	99.96	99	155	34	7.9		10.7	881	774	129	339	88	1.067
29		0.0212	99.859	48	76	117	4.5		14.7	867	656	129	344	90	1.061
30															#DIV/0!
31															#DIV/0!
32															#DIV/0!
33															#DIV/0!
34															#DIV/0!
35															#DIV/0!

								Constants for flame Temp. calculation:						
								1.67E+08	2.23E+08	-2921.31	15972.3	-7E+07	32214690	
								-462.557	-280834	1583.426	-3.3E+08	14578990	7.938999	
Air Density	Pressure Drop	Effective Area		Phi-s	Phi-m	T3	P3	tks Tflame (fars)	tkm Tflame (farm)	Trs Tflame (fars)	Trm Tflame (farm)	Comb. nefficienc	NOXei	COei
						K	atm	K	K	R	R			
0.12827002	1.463	0.53874167		0.883	0.900	311	1.81	2169	2186	3905	3935	0.0490	1.76	205.79
0.12886866	1.4098	0.55104613		0.682	0.712	310	1.81	1879	1930	3382	3474	0.0211	1.42	85.17
0.13042287	0.9648	0.62839317		0.430	0.487	308	1.82	1378	1499	2480	2698	0.0242	0.84	86.08
0.13605449	1.1603	0.37276432		0.883	0.904	312	1.93	2170	2191	3906	3944	0.0205	2.35	85.08
0.13559788	0.7332	0.47920839		0.704	0.700	312	1.92	1919	1911	3454	3440	0.0360	1.59	149.72
0.13593694	0.564	0.54569981		0.480	0.499	311	1.92	1485	1525	2673	2744	0.0160	1.28	64.49
0.08030203	2.2304	0.43833663		0.769	0.791	508	1.85	2135	2165	3843	3897	0.0070	2.70	24.47
0.08139249	0.77	0.68722831		0.580	0.593	507	1.87	1818	1843	3272	3318	0.0089	1.36	25.17
0.0815445	0.715	0.71250545		0.302	0.398	506	1.87	1261	1459	2270	2625	0.0401	0.93	137.81
0.08497211	0.7175	0.44229743		0.826	0.794	506	1.95	2210	2169	3977	3904	0.0191	7.80	75.89
0.08502113	0.45188	0.58770104		0.575	0.584	504	1.95	1808	1825	3254	3285	0.0077	1.50	27.21
0.08514304	0.18876	0.90866099		0.357	0.387	504	1.95	1373	1436	2471	2585	0.0181	1.23	62.16
0.17639202	4.0066	0.45912714		0.807	0.814	508	4.07	2194	2203	3949	3965	0.0034	0.84	11.89
0.17540384	2.8512	0.56271562		0.631	0.610	508	4.04	1917	1880	3451	3384	0.0018	1.88	4.21
				0.000	0.000	256	0.00	#NUM!	#NUM!	#NUM!	#NUM!	1	#DIV/0!	#DIV/0!
0.12384016	2.5886	0.5918689		0.763	0.809	729	4.10	2267	2326	4080	4186	0.0066	25.16	19.90
0.12374584	3.01	0.56869597		0.650	0.592	729	4.10	2095	1996	3771	3593	0.0032	13.20	9.87
				0.000	0.000	256	0.00	#NUM!	#NUM!	#NUM!	#NUM!	1	#DIV/0!	#DIV/0!
0.10767282	2.2274	0.61096814		0.654	0.696	838	4.10	2173	2238	3912	4028	0.0039	24.01	11.28
0.10663719	2.5074	0.59888702		0.478	0.507	839	4.06	1866	1918	3360	3453	0.0016	5.38	4.99
0.10742099	2.2163	0.63161013		0.244	0.298	836	4.07	1419	1526	2554	2747	0.0035	0.36	13.68
0.306833	6.3941	0.59491534		0.888	0.800	727	10.12	2427	2331	4369	4196	0.0034	53.28	5.53
0.30657058	5.952	0.6102329		0.644	0.608	728	10.12	2096	2034	3773	3660	0.0011	15.88	2.35
0.31254541	5.6129	0.61558355		0.446	0.436	728	10.32	1732	1712	3117	3081	0.001	14.16	1.17
0.24164107	5.6544	0.61817183		0.791	0.702	923	10.12	2438	2316	4389	4168	0.004	85.83	3.53
0.24524339	5.5944	0.62966888		0.537	0.501	924	10.29	2043	1978	3677	3560	0.0014	29.29	2.06
0.24846158	5.202	0.64084778		0.269	0.307	923	10.41	1546	1619	2783	2915	0.0005	6.42	0.90
0.51518425	10.14848	0.59669688		0.709	0.657	731	17.09	2213	2128	3983	3830	0.00176	16.32	1.57
0.51136527	10.37088	0.60545687		0.522	0.489	731	16.96	1884	1822	3392	3279	0.0004	6.47	0.86
0.52617911	9.46854	0.61662373		0.311	0.293	731	17.46	1473	1437	2651	2586	0.00141	5.56	5.21
0	0	#DIV/0!		0.000	#DIV/0!	256	0.00	#NUM!	#DIV/0!	#NUM!	#DIV/0!	1	#DIV/0!	#DIV/0!
0	0	#DIV/0!		0.000	#DIV/0!	256	0.00	#NUM!	#DIV/0!	#NUM!	#DIV/0!	1	#DIV/0!	#DIV/0!
0	0	#DIV/0!		0.000	#DIV/0!	256	0.00	#NUM!	#DIV/0!	#NUM!	#DIV/0!	1	#DIV/0!	#DIV/0!
0	0	#DIV/0!		0.000	#DIV/0!	256	0.00	#NUM!	#DIV/0!	#NUM!	#DIV/0!	1	#DIV/0!	#DIV/0!
0	0	#DIV/0!		0.000	#DIV/0!	256	0.00	#NUM!	#DIV/0!	#NUM!	#DIV/0!	1	#DIV/0!	#DIV/0!
0	0	#DIV/0!		0.000	#DIV/0!	256	0.00	#NUM!	#DIV/0!	#NUM!	#DIV/0!	1	#DIV/0!	#DIV/0!

NOx severity parameter	GSL-S	gslm	rho4s	rho4m	ts	tm	eigasl-s	eigasl-m	eic-s	eic-m	EI(NOx) (again)
0.0260	2.93	3.12	0.0174	0.0172	4.42	4.46	12.94	13.91	2.23	2.33	1.756099
0.0258	0.72	0.97	0.0201	0.0196	5.02	5.09	3.62	4.92	1.21	1.35	1.421058
0.0257	0.01	0.04	0.0281	0.0258	6.93	7.19	0.07	0.27	0.83	0.85	0.840963
0.0268	2.94	3.18	0.0188	0.0186	7.48	7.57	21.98	24.05	3.28	3.51	2.3501
0.0267	0.91	0.87	0.0215	0.0216	8.74	8.72	7.93	7.57	1.71	1.67	1.587171
0.0266	0.03	0.05	0.0279	0.0272	11.02	11.15	0.35	0.53	0.86	0.88	1.281316
0.0723	2.57	2.89	0.0175	0.0173	5.60	5.67	14.36	16.36	5.15	5.75	2.704945
0.0721	0.49	0.58	0.0221	0.0217	7.72	7.78	3.78	4.50	1.96	2.18	1.356104
0.0718	0.00	0.02	0.0318	0.0275	8.83	9.98	0.02	0.24	0.83	0.90	0.934436
0.0733	3.39	2.93	0.0190	0.0193	10.97	10.77	37.22	31.51	12.19	10.45	7.803274
0.0724	0.46	0.52	0.0233	0.0231	12.30	12.37	5.66	6.37	2.53	2.75	1.496858
0.0722	0.01	0.02	0.0310	0.0297	15.51	16.07	0.15	0.31	0.87	0.92	1.225673
0.0993	3.21	3.31	0.0381	0.0380	5.95	5.97	19.07	19.79	8.71	9.01	0.837883
0.0987	0.90	0.72	0.0442	0.0451	7.06	6.97	6.35	5.05	3.44	2.90	1.875963
0.0000	#NUM!	#NUM!	#NUM!	#NUM!	#NUM!	#NUM!	#NUM!	#NUM!	#NUM!	#NUM!	#DIV/0!
0.3096	4.09	4.86	0.0381	0.0371	6.53	6.73	26.74	32.72	35.32	43.03	25.1637
0.3105	2.18	1.37	0.0409	0.0430	7.94	7.62	17.28	10.46	23.17	14.36	13.19648
0.0000	#NUM!	#NUM!	#NUM!	#NUM!	#NUM!	#NUM!	#NUM!	#NUM!	#NUM!	#NUM!	#DIV/0!
0.5436	2.97	3.73	0.0400	0.0388	7.71	7.94	22.93	29.63	52.76	67.93	24.00831
0.5449	0.67	0.91	0.0459	0.0447	8.69	8.94	5.80	8.10	13.99	19.21	5.375749
0.5363	0.02	0.05	0.0610	0.0567	10.19	11.55	0.16	0.55	1.19	2.06	0.364007
0.4394	6.21	4.93	0.0879	0.0915	7.07	6.67	43.92	32.91	81.25	61.07	53.28205
0.4421	2.19	1.65	0.1022	0.1053	8.06	7.86	17.63	12.96	33.29	24.69	15.88123
0.4455	0.27	0.23	0.1265	0.1280	9.88	9.77	2.67	2.27	5.78	5.05	14.16078
1.2089	6.36	4.73	0.0880	0.0927	8.35	7.84	53.07	37.09	268.13	187.63	85.83233
1.2236	1.72	1.25	0.1069	0.1104	9.60	9.27	16.51	11.60	85.02	59.96	29.29202
1.2224	0.06	0.11	0.1433	0.1369	10.83	11.79	0.63	1.31	4.02	7.49	6.420936
0.5545	3.43	2.49	0.1633	0.1699	7.90	7.64	27.07	19.01	63.37	44.76	16.32122
0.5525	0.74	0.50	0.1901	0.1967	9.01	8.75	6.70	4.40	16.24	10.95	6.469509
0.5595	0.03	0.02	0.2516	0.2579	12.17	11.77	0.35	0.23	1.63	1.36	5.556828
0.0000	#NUM!	#DIV/0!	#NUM!	#DIV/0!	#NUM!	#DIV/0!	#NUM!	#DIV/0!	#NUM!	#DIV/0!	#DIV/0!
0.0000	#NUM!	#DIV/0!	#NUM!	#DIV/0!	#NUM!	#DIV/0!	#NUM!	#DIV/0!	#NUM!	#DIV/0!	#DIV/0!
0.0000	#NUM!	#DIV/0!	#NUM!	#DIV/0!	#NUM!	#DIV/0!	#NUM!	#DIV/0!	#NUM!	#DIV/0!	#DIV/0!
0.0000	#NUM!	#DIV/0!	#NUM!	#DIV/0!	#NUM!	#DIV/0!	#NUM!	#DIV/0!	#NUM!	#DIV/0!	#DIV/0!
0.0000	#NUM!	#DIV/0!	#NUM!	#DIV/0!	#NUM!	#DIV/0!	#NUM!	#DIV/0!	#NUM!	#DIV/0!	#DIV/0!
0.0000	#NUM!	#DIV/0!	#NUM!	#DIV/0!	#NUM!	#DIV/0!	#NUM!	#DIV/0!	#NUM!	#DIV/0!	#DIV/0!

LEAN BLOW-OUT CONDITIONS				CX area=	10.57					
TEST POINTS	DATE	AIR PRES	AIR TEMP	AIR FLOW	FUEL FLOW	F/A (lbo)	Vref	Lefebvre Parameter	Phi(lbo)	AIR DENSITY
0-2	1/30/95	25.51	80.99	0.179	0.344	0.0320	19.16	0.374	0.470	0.127268
3-5	1/30/95	27.345	80.26	0.107	0.213	0.0330	10.67	0.340	0.484	0.136607
6-8	1/30/95	26.42	448.82	0.125	0.293	0.0390	21.70	0.282	0.572	0.078461
9-11	1/27/95	28.672	455.466	0.082	0.183	0.0370	13.21	0.258	0.543	0.084531
12-14	1/30/95	58.94	454.73	0.271	0.576	0.0350	21.22	0.271	0.514	0.173907
15-17	1/31/95	59.26	852.7	0.286	0.361	0.0210	31.97	0.216	0.308	0.121841
18-20	1/31/95	58.88	1050.5	0.232	0.252	0.0180	32.62	0.188	0.264	0.105207
21-23	2/1/95	148.1	850.3	0.577	0.680	0.0197	30.36	0.207	0.289	0.305059
24-26	2/1/95	152.2	1202.5	0.522	0.320	0.0102	28.77	0.160	0.150	0.247088
27-29	2/9/95	258.1	856.6	0.966	0.944	0.016	24.87	0.195	0.235	0.529094
30-32							#DIV/0!	#DIV/0!	0.000	0
33-35							#DIV/0!	#DIV/0!	0.000	0

Note 1: Desired conditions modified by T^0.5/P to keep Mach number constant.
Note 2: Adjusted to keep fuel-air ratio at the desired value.

EVALUATION OF PROBE UNIFORMITY

Test point:

Probe #	Date	Air Pres.	Air Temp.	Air Flow Rate	Fuel Flow Rate	f/a meas.	f/a Calc	Comb Efficiency	CO ppm	CO2 %	HC ppm	NO ppm	NOX ppm	O2 %
1														
2														
3														
4														

APPENDIX B

SwRI Dome 2 Data (GEAE Configuration 7)

SUMMARY OF TEST DATA FOR ASCT CYCLONE SWIRLERS

Test Dome #2

OPERATING CONDITIONS

Test Point	Date	Air Pres psia Desired	Air Pres psia Actual	Air Temp deg F Desired	Air Temp deg F Actual	Air Flow lbm/s Desired	Air Flow lbm/s (note 1)	Air Flow lbm/s Actual	Fuel Flow lbm/min Desired	Fuel Flow lbm/min (note 2)	Fuel Flow lbm/min Actual	F/A Desired	F/A Actual	DP(dome) %Pa Desired	DP(dome) %Pa Actual
0	3/24/95	15	25.9	70	114	0.087	0.144	0.151	0.320	0.558	0.554	0.0616	0.0614	4	0.505
0	3/27/95	15	26.9	70	83.7	0.087	0.154	0.154	0.320	0.569	0.572	0.0616	0.062	4	6.56
1	3/27/95	15	26.7	70	77.7	0.087	0.154	0.156	0.250	0.448	0.439	0.0479	0.047	4	6.005
1	3/27/95	15	26.7	70	78	0.087	0.154	0.156	0.250	0.448	0.439	0.0479	0.047	4	6
2	3/27/95	15		70		0.087	0.000		0.178	0.000		0.0342		4	
3	3/27/95	15	28.4	70	75.9	0.053	0.100	0.1	0.197	0.371	0.369	0.0618	0.061	1.5	2.885
4	3/27/95	15	28.3	70	77	0.053	0.099	0.101	0.153	0.292	0.290	0.0482	0.047	1.5	2.407
5	3/27/95	15	28.1	70	78	0.053	0.099	0.101	0.110	0.210	0.211	0.0346	0.035	1.5	1.853
6	3/28/95	15	27.7	450	449	0.067	0.124	0.121	0.218	0.394	0.390	0.0543	0.054	4	7.72
7	3/28/95	15	27.7	450	451.6	0.067	0.124	0.122	0.163	0.297	0.297	0.0406	0.041	4	4.371
8	3/28/95	15		450		0.067	0.000		0.108	0.000		0.0269		4	
9	3/28/95	15	28.7	450	445.6	0.041	0.079	0.076	0.133	0.247	0.247	0.0542	0.054	1.5	2.922
10	3/28/95	15	28.7	450	455.5	0.041	0.078	0.079	0.100	0.193	0.192	0.0407	0.041	1.5	1.765
11	3/28/95	15	28.9	450	451.4	0.041	0.079	0.077	0.067	0.125	0.139	0.0271	0.030	1.5	1.431
12	3/28/95	60	60.3	450	453.3	0.267	0.268	0.267	0.873	0.873	0.877	0.0545	0.055	4	4.179
13	3/28/95	60	60.3	450	453.1	0.267	0.268	0.265	0.655	0.650	0.649	0.0409	0.041	4	4.119
14	3/28/95	60	60.2	450	453.2	0.267	0.267	0.266	0.437	0.435	0.483	0.0273	0.030	4	3.966
15	3/29/95	60	60.5	850	851.2	0.222	0.224	0.219	0.727	0.717	0.717	0.0546	0.055	4	4.051
16	3/29/95	60	60.4	850	853	0.222	0.223	0.218	0.545	0.535	0.533	0.0409	0.041	4	3.937
16	3/30/95		60.3		850.4			0.222			0.543		0.041		4.088
17	3/29/95	60	60.3	850	850.5	0.222	0.223	0.222	0.363	0.363	0.365	0.0273	0.027	4	3.991
18	3/29/95	60	59.8	1050	1049.5	0.207	0.206	0.207	0.593	0.593	0.596	0.0478	0.048	4	4.171
19	3/29/95	60	59.8	1050	1048.9	0.207	0.206	0.206	0.423	0.421	0.424	0.0341	0.034	4	4.071
20	3/29/95	60	59.6	1050	1050.8	0.207	0.206	0.207	0.253	0.253	0.252	0.0204	0.020	4	3.958
21	3/29/95	150	150.3	850	849.2	0.555	0.556	0.546	1.818	1.789	1.790	0.0546	0.055	4	3.91
			148.9		848.7			0.549			1.819		0.055		4.031
22	3/29/95	150	149.2	850	851.2	0.555	0.552	0.559	1.363	1.373	1.361	0.0409	0.041	4	4.195
23	3/29/95	150	149.5	850	850.3	0.555	0.553	0.553	0.910	0.907	0.893	0.0273	0.027	4	4.332
24		150		1200		0.493	0.000		1.413	0.000		0.0478		4	
25		150		1200		0.493	0.000		1.010	0.000		0.0341		4	
26		150		1200		0.493	0.000		0.605	0.000		0.0205		4	
27	3/29/95	250	253.9	850	853.3	0.926	0.939	0.897	2.652	2.569	2.630	0.0477	0.0490	4	3.658
			250.9		849.1			0.918			2.602		0.0473		3.903
28	3/29/95	250	248.8	850	850.8	0.926	0.921	0.936	1.895	1.915	1.923	0.0341	0.0342	4	4.465
29	3/29/95	250	245.6	850	850.9	0.926	0.909	0.923	1.137	1.133	1.131	0.0205	0.0204	4	4.18
30		250		1200		0.822	0.000		2.355	0.000		0.0477		4	
31		250		1200		0.822	0.000		1.683	0.000		0.0341		4	
32		250		1200		0.822	0.000		1.010	0.000		0.0205		4	
33		250		1200		0.65	0.000		1.862	0.000		0.0477		2.5	
34		250		1200		0.65	0.000		1.330	0.000		0.0341		2.5	
35		250		1200		0.65	0.000		0.798	0.000		0.0205		2.5	

TEST POINT	Lean Blowout f/a	Calc. f/a from Emissions	Comb. Efficiency	EXHAUST GAS ANALYSIS NO ppm	NOx ppm	CO ppm	CO2 %	HC ppm	O2 %	DOME TEMPERATURES FACE #1 F	FACE #2 F	INJ #1 F	INJ #2 F	FUEL LINE F	fars/farm
0	0.0386	0.0588	93.1	26	26	17073	11.22	250	4.02						0.958
0		0.0532	93.4	24	44	18077	11.22	0	6.38						0.862
1		0.0446	97.874	15	41	3372	9.74	160	8.12						0.951
1	-	0.0469	97.43	16	38	4610	10.02	150	7.37						0.998
2	-														#DIV/0!
3	0.0232	0.0611	96.603	74	90	7456	12.84	320	2.82						0.998
4	-	0.0479	98.681	26	41	1702	10.61	180	6.95						1.019
5	-	0.0339	97.239	4	12	1864	7.14	340	11.24						0.969
6	0.0323	0.0537	98.658	85	110	1414	11.5	260	4.9						0.998
7	0.0298	0.0404	97.052	10	23	1966	8.6	500	9.5						0.993
8	-														#DIV/0!
9	0.0308	0.0544	99.128	165	175	1215	11.8	130	4.7						1.006
10	0.0311	0.0407	99.173	32	42	182	8.9	190	9.1						1.000
11	-	0.0253	95.786	1	1	3393	5	195	13.9						0.835
12	0.0288	0.0566	99.392	245	275	1147	12.2	48	3.9						1.033
13	0.0289	0.0417	99.705	68	74	117	9.2	60	8.7						1.022
14	-	0.0268	96.284	3.6	9	3448	5.4	150	13.5						0.887
15	0.0201	0.0557	99.342	1100	1200	1049	11.8	34	4						1.022
16	0.0208	0.0422	99.722	295	300	215	9.5	34	8.7						1.037
16		0.0424	99.717	360	390	231	9.5	30	8.6						1.042
17	-	0.0282	99.837	38	42	50	6	20	12.7						1.029
18	0.0165	0.0494	99.477	1100	1400	655	10.9	20	6.2						1.029
19	0.0155	0.0354	99.819	200	240	117	7.9	16	10.8						1.032
20	-	0.0205	99.588	20	30	296	4.5	12	15.5						1.005
21	0.019	0.0596	99.689	1200	1300	376	12.8	10	2.8						1.090
	0.019	0.0595	99.726	1200	1600	312	12.8	0	2.8						1.076
22	-	0.0432	99.86	500	600	83	9.7	4.5	8.3						1.064
23	-	0.0282	99.923	170	210	34	6.2	1.1	13.1						1.048
24															#DIV/0!
25	-														#DIV/0!
26	-														#DIV/0!
27	0.0162	0.0542	99.867	500	700	133	11.8	2.2	4.5						1.106
	0.0153	0.0517	99.866	520	900	100	11.5	1.9	5.5						1.093
28		0.0392	99.901	200	500	50	8.6	0.9	9.5						1.146
29		0.0226	99.903	100	200	50	5	0.9	14.9						1.108
30															#DIV/0!
31															#DIV/0!
32															#DIV/0!
33															#DIV/0!
34															#DIV/0!
35															#DIV/0!

								Constants for flame Temp. calculation:						
								1.67E+08	2.23E+08	-2921.31	15972.3	-7E+07	32214690	
								-462.557	-280834	1583.426	-3.3E+08	14578990	7.938999	
Air Density	Pressure Drop	Effective Area		Phi-s	Phi-m	T3	P3	tks Tflame (fars)	tkm Tflame (farm)	Trs Tflame (fars)	Trm Tflame (farm)	Comb. nefficienc	NOXel	COel
						K	atm	K	K	R	R			
0.12178301	0.130795	1.78989989		0.863	0.901	319	1.76	2150	2191	3871	3944	0.06893	0.662186	264.7373
0.13353398	1.76464	0.47461066		0.781	0.905	302	1.83	2034	2187	3661	3937	0.06599	1.114137	278.6832
0.13402014	1.603335	0.50346368		0.654	0.688	299	1.82	1823	1883	3281	3389	0.02126	1.340012	67.09821
0.13394541	1.602	0.5038139		0.688	0.690	299	1.82	1883	1886	3389	3394	0.0257	1.1943	88.21234
0	0	#DIV/0!		0.000	0.000	256	0.00	#NUM!	#NUM!	#NUM!	#NUM!	1	#DIV/0!	#DIV/0!
0.14303207	0.81934	0.43701056		0.897	0.898	298	1.93	2177	2178	3918	3921	0.03397	2.180196	109.9658
0.14223648	0.681181	0.48542857		0.703	0.690	298	1.93	1908	1886	3435	3394	0.01319	1.252524	31.65632
0.14096876	0.520693	0.55771173		0.497	0.514	299	1.91	1513	1547	2724	2784	0.02761	0.537816	50.86239
0.08224599	2.13844	0.43163852		0.788	0.789	505	1.88	2160	2162	3888	3891	0.01342	3.110085	24.34039
0.08201141	1.210767	0.57920609		0.593	0.597	506	1.88	1842	1850	3316	3331	0.02948	0.85764	44.63334
0	0	#DIV/0!		0.000	0.000	256	0.00	#NUM!	#NUM!	#NUM!	#NUM!	1	#DIV/0!	#DIV/0!
0.08553509	0.838614	0.42452287		0.798	0.794	503	1.95	2173	2167	3911	3900	0.00872	4.837126	20.44675
0.08461013	0.506555	0.57087801		0.597	0.597	509	1.95	1852	1852	3333	3333	0.00827	1.550249	4.089989
0.08558303	0.413559	0.61230651		0.371	0.445	506	1.97	1405	1554	2529	2797	0.04214	0.061558	127.1653
0.17819794	2.519937	0.5960817		0.831	0.804	507	4.10	2223	2189	4001	3941	0.00608	7.363651	18.69918
0.17823698	2.483757	0.59584478		0.612	0.599	507	4.10	1882	1858	3388	3345	0.00295	2.648273	2.549268
0.17792191	2.387532	0.6105666		0.393	0.443	507	4.10	1454	1555	2616	2799	0.03716	0.515453	120.2298
0.12453323	2.450855	0.59303918		0.817	0.800	728	4.12	2335	2314	4204	4166	0.00658	33.24184	17.69204
0.12415695	2.377948	0.60022007		0.619	0.597	729	4.11	2043	2005	3677	3608	0.00278	10.38997	4.533465
0.12419733	2.465064	0.60023796		0.622	0.597	728	4.10	2047	2004	3685	3607	0.00283	13.50526	4.870226
0.12418785	2.406573	0.60751165		0.414	0.402	728	4.10	1663	1640	2993	2953	0.00163	2.306456	1.671724
0.10692196	2.494258	0.59966255		0.725	0.704	839	4.07	2281	2251	4105	4051	0.00523	42.10891	11.9946
0.10696447	2.434458	0.60393057		0.519	0.503	838	4.07	1940	1911	3493	3440	0.00181	10.00477	2.96948
0.10647266	2.358968	0.61791819		0.301	0.299	839	4.05	1534	1531	2762	2756	0.00412	2.184238	13.12106
0.30985023	5.87673	0.60532635		0.875	0.803	727	10.22	2415	2334	4348	4202	0.00311	33.40252	5.881965
0.30708134	6.002159	0.60496827		0.873	0.811	727	10.13	2413	2345	4344	4221	0.00274	41.13451	4.883594
0.30711337	6.25894	0.60318811		0.634	0.596	728	10.15	2079	2012	3743	3622	0.0014	20.38645	1.716987
0.30794226	6.47634	0.58582296		0.414	0.395	728	10.17	1669	1632	3005	2938	0.00077	11.16697	1.100763
0	0	#DIV/0!		0.000	0.000	256	0.00	#NUM!	#NUM!	#NUM!	#NUM!	1	#DIV/0!	#DIV/0!
0	0	#DIV/0!		0.000	0.000	256	0.00	#NUM!	#NUM!	#NUM!	#NUM!	1	#DIV/0!	#DIV/0!
0	0	#DIV/0!		0.000	0.000	256	0.00	#NUM!	#NUM!	#NUM!	#NUM!	1	#DIV/0!	#DIV/0!
0.52179221	9.287662	0.60958064		0.795	0.719	730	17.27	2337	2228	4207	4010	0.00133	19.54665	2.261125
0.51728118	9.792627	0.61019754		0.759	0.694	727	17.07	2285	2187	4114	3936	0.00134	25.7937	1.744897
0.51228634	11.10892	0.58698129		0.575	0.502	728	16.93	1981	1843	3566	3318	0.00099	19.16762	1.166989
0.50565888	10.26608	0.60605394		0.332	0.299	728	16.71	1511	1447	2720	2604	0.00097	13.18171	2.006367
0	0	#DIV/0!		0.000	0.000	256	0.00	#NUM!	#NUM!	#NUM!	#NUM!	1	#DIV/0!	#DIV/0!
0	0	#DIV/0!		0.000	0.000	256	0.00	#NUM!	#NUM!	#NUM!	#NUM!	1	#DIV/0!	#DIV/0!
0	0	#DIV/0!		0.000	0.000	256	0.00	#NUM!	#NUM!	#NUM!	#NUM!	1	#DIV/0!	#DIV/0!
0	0	#DIV/0!		0.000	0.000	256	0.00	#NUM!	#NUM!	#NUM!	#NUM!	1	#DIV/0!	#DIV/0!
0	0	#DIV/0!		0.000	0.000	256	0.00	#NUM!	#NUM!	#NUM!	#NUM!	1	#DIV/0!	#DIV/0!
0	0	#DIV/0!		0.000	0.000	256	0.00	#NUM!	#NUM!	#NUM!	#NUM!	1	#DIV/0!	#DIV/0!

NOx severity parameter	GSL-S	gslm	rho4s	rho4m	ts	tm	eigasl-s	eigasl-m	eic-s	eic-m	EI(NOx) (again)
0.0268	2.73	3.17	0.0180	0.0176	4.63	4.73	12.62	15.02	2.23	2.50	0.662186
0.0250	1.65	3.13	0.0185	0.0172	4.21	4.50	6.94	14.10	1.55	2.29	1.114137
0.0245	0.51	0.74	0.0206	0.0200	5.16	5.24	2.61	3.86	1.09	1.22	1.340012
0.0245	0.74	0.75	0.0200	0.0200	5.24	5.24	3.87	3.93	1.22	1.22	1.1943
0.0000	#NUM!	#NUM!	#NUM!	#NUM!	#NUM!	#NUM!	#NUM!	#NUM!	#NUM!	#NUM!	#DIV/0!
0.0249	3.02	3.03	0.0190	0.0190	7.62	7.62	22.97	23.12	3.21	3.23	2.180196
0.0250	0.86	0.75	0.0217	0.0220	8.79	8.74	7.52	6.54	1.61	1.51	1.252524
0.0250	0.04	0.06	0.0273	0.0267	10.91	11.01	0.46	0.64	0.87	0.89	0.537816
0.0717	2.83	2.85	0.0177	0.0177	5.96	5.96	16.85	16.99	5.86	5.90	3.110085
0.0723	0.57	0.60	0.0216	0.0215	7.24	7.26	4.16	4.39	2.08	2.15	0.85764
0.0000	#NUM!	#NUM!	#NUM!	#NUM!	#NUM!	#NUM!	#NUM!	#NUM!	#NUM!	#NUM!	#DIV/0!
0.0721	2.97	2.90	0.0192	0.0193	10.32	10.30	30.62	29.88	10.02	9.80	4.837126
0.0741	0.61	0.61	0.0228	0.0228	11.95	11.95	7.29	7.29	3.08	3.08	1.550249
0.0735	0.01	0.06	0.0304	0.0275	13.87	14.94	0.19	0.93	0.88	1.11	0.061558
0.0991	3.55	3.16	0.0390	0.0396	6.12	6.02	21.70	19.02	9.79	8.68	7.363651
0.0991	0.74	0.63	0.0461	0.0467	7.30	7.24	5.37	4.59	3.04	2.72	2.648273
0.0990	0.02	0.06	0.0596	0.0557	8.28	8.70	0.19	0.55	0.90	1.05	0.515453
0.3095	4.99	4.71	0.0373	0.0376	7.05	6.97	35.16	32.81	46.17	43.13	33.24184
0.3109	1.72	1.43	0.0426	0.0434	8.31	8.18	14.32	11.72	19.38	16.01	10.38997
0.3084	1.76	1.43	0.0424	0.0433	8.15	8.01	14.32	11.42	19.22	15.49	13.50526
0.3084	0.16	0.13	0.0522	0.0529	10.08	9.94	1.61	1.32	2.89	2.52	2.306456
0.5429	4.27	3.89	0.0377	0.0382	7.65	7.54	32.67	29.33	74.73	67.18	42.10891
0.5420	1.02	0.87	0.0443	0.0450	9.19	9.05	9.41	7.86	22.07	18.58	10.00477
0.5442	0.05	0.05	0.0559	0.0560	11.46	11.43	0.59	0.58	2.17	2.13	2.184238
0.4428	6.06	4.98	0.0897	0.0928	7.24	6.91	43.84	34.37	81.72	64.24	33.40252
0.4405	6.03	5.12	0.0888	0.0914	7.04	6.76	42.48	34.61	78.80	64.36	41.13451
0.4441	2.03	1.49	0.1031	0.1065	8.06	7.85	16.37	11.66	31.10	22.40	20.38645
0.4433	0.17	0.12	0.1285	0.1314	10.14	9.90	1.70	1.23	3.96	3.09	11.16697
0.0000	#NUM!	#NUM!	#NUM!	#NUM!	#NUM!	#NUM!	#NUM!	#NUM!	#NUM!	#NUM!	#DIV/0!
0.0000	#NUM!	#NUM!	#NUM!	#NUM!	#NUM!	#NUM!	#NUM!	#NUM!	#NUM!	#NUM!	#DIV/0!
0.0000	#NUM!	#NUM!	#NUM!	#NUM!	#NUM!	#NUM!	#NUM!	#NUM!	#NUM!	#NUM!	#DIV/0!
0.5526	5.02	3.61	0.1569	0.1646	7.88	7.51	39.54	27.13	91.86	63.29	19.54665
0.5434	4.33	3.13	0.1582	0.1653	7.68	7.37	33.27	23.06	76.15	53.04	25.7937
0.5442	1.27	0.58	0.1799	0.1933	9.07	8.54	11.52	4.94	26.96	12.03	19.16762
0.5416	0.04	0.02	0.2335	0.2439	11.73	11.08	0.49	0.24	1.93	1.37	13.18171
0.0000	#NUM!	#NUM!	#NUM!	#NUM!	#NUM!	#NUM!	#NUM!	#NUM!	#NUM!	#NUM!	#DIV/0!
0.0000	#NUM!	#NUM!	#NUM!	#NUM!	#NUM!	#NUM!	#NUM!	#NUM!	#NUM!	#NUM!	#DIV/0!
0.0000	#NUM!	#NUM!	#NUM!	#NUM!	#NUM!	#NUM!	#NUM!	#NUM!	#NUM!	#NUM!	#DIV/0!
0.0000	#NUM!	#NUM!	#NUM!	#NUM!	#NUM!	#NUM!	#NUM!	#NUM!	#NUM!	#NUM!	#DIV/0!
0.0000	#NUM!	#NUM!	#NUM!	#NUM!	#NUM!	#NUM!	#NUM!	#NUM!	#NUM!	#NUM!	#DIV/0!
0.0000	#NUM!	#NUM!	#NUM!	#NUM!	#NUM!	#NUM!	#NUM!	#NUM!	#NUM!	#NUM!	#DIV/0!

TEST POINTS	DATE	AIR PRES	AIR TEMP	AIR FLOW	FUEL FLOW	F/A (lbo)	Vref	Lefebvre Parameter	Phi(lbo)	AIR DENSITY
0-2	3/24/95	26.7	76.7	0.166	0.384	0.0386	16.84	0.367	0.566	0.13427
3-5	3/24/95	28.1	77.4	0.112	0.222	0.0330	10.81	0.341	0.484	0.141126
6-8	3/28/95	27.6	452.4	0.121	0.235	0.0323	20.18	0.278	0.474	0.081644
6-8	3/28/95	27.3	455.4	0.145	0.259	0.0298	24.53	0.286	0.437	0.080492
9-11	3/28/95	28.8	457.7	0.077	0.143	0.0308	12.38	0.255	0.452	0.084701
9-11	3/28/95	28.7	454.9	0.080	0.149	0.0311	12.87	0.257	0.456	0.084666
12-14	3/28/95	59.8	453.7	0.287	0.497	0.0288	22.13	0.273	0.423	0.176643
12-14	3/28/95	59.9	453.4	0.287	0.496	0.0289	22.08	0.273	0.424	0.176996
15-17	3/29/95	59	852.6	0.259	0.313	0.0201	29.08	0.212	0.295	0.121316
15-17	3/29/95	58.8	853.1	0.259	0.322	0.0208	29.19	0.213	0.305	0.120859
18-20	3/29/95	59.1	1052.2	0.230	0.228	0.0165	29.70	0.185	0.242	0.105482
18-20	3/29/95	59.1	1051.9	0.231	0.253	0.0182	29.82	0.185	0.267	0.105503
21-23	3/29/95	148.8	850.8	0.588	0.679	0.0193	26.14	0.202	0.283	0.306383
21-23	3/29/95	147.7	851.9	0.600	0.648	0.0180	26.89	0.202	0.264	0.303864
24-26							#DIV/0!	#DIV/0!	0.000	0
27-29	3/29/95	247.1	850.1	0.968	0.941	0.0162	25.90	0.197	0.238	0.509058
27-29	3/29/95	249	851.4	0.984	0.905	0.0153	26.15	0.197	0.225	0.512464
30-32							#DIV/0!	#DIV/0!	0.000	0
33-35							#DIV/0!	#DIV/0!	0.000	0

Note 1: Desired conditions modified by T^0.5/P to keep Mach number constant.
Note 2: Adjusted to keep fuel-air ratio at the desired value.

EVALUATION OF PROBE UNIFORMITY

Test point 19

Probe #	Date	Air Pres.	Air Temp.	Air Flow Rate	Fuel Flow Rate	f/a meas.	f/a Calc	Comb Efficiency	CO ppm	CO2 %	HC ppm	NO ppm	NOX ppm	O2 %
1	3/29/95	60.0	1050.5	0.201	0.410	0.0340	0.0355	99.806	133	7.9	16	220	250	10.8
2	3/29/95	59.9	1049.7	0.204	0.419	0.0343	0.0369	99.81	166	8.1	11	240	270	10.2
3	3/29/95	59.7	1050.9	0.207	0.425	0.0343	0.0368	99.794	199	8.1	11	225	245	10.3
4	3/29/95	59.7	1050.8	0.204	0.417	0.0341	0.0319	99.875	83	7.1	8	140	160	12

APPENDIX C

SwRI Dome 3 Data (GEAE Configuration 14)

SUMMARY OF TEST DATA FOR HSCT CYCLONE SWIRLERS

Test Dome # 3 (CONFIG 14)

OPERATING CONDITIONS

Test Point	Date	Air Pres psia		Air Temp deg F		Air Flow lbm/s			Fuel Flow lbm/min			F/A		DP(dome) %Pa	
		Desired	Actual	Desired	Actual	Desired	(note 1)	Actual	Desired	(note 2)	Actual	Desired	Actual	Desired	Actual
0	5/1/95	15	26.5	70	78.1	0.087	0.153	0.151	0.320	0.558	0.560	0.0616	0.0618	4	4.935
1	5/1/95	15	26.4	70	78.5	0.087	0.152	0.153	0.250	0.440	0.438	0.0479	0.0476	4	4.547
2	5/1/95	15	26.1	70	78.8	0.087	0.150	0.153	0.178	0.314	0.320	0.0342	0.0348	4	4.113
3	5/1/95	15	28	70	79.7	0.053	0.098	0.096	0.197	0.356	0.354	0.0618	0.0614	1.5	2.267
4	5/1/95	15	28	70	79.7	0.053	0.098	0.099	0.153	0.286	0.288	0.0482	0.0486	1.5	2.014
5	5/1/95	15	27.9	70	79.8	0.053	0.098	0.100	0.110	0.208	0.207	0.0346	0.0345	1.5	1.73
6	5/1/95	15	27.2	450	449.9	0.067	0.122	0.122	0.218	0.398	0.399	0.0543	0.0544	4	5.417
7	5/1/95	15	27.1	450	455.6	0.067	0.121	0.123	0.163	0.300	0.302	0.0406	0.0407	4	3.143
8	5/1/95	15	27.3	450	448.8	0.067	0.122	0.118	0.108	0.191	0.261	0.0269	0.0369	4	3.067
9	5/1/95	15	28.3	450	452	0.041	0.077	0.074	0.133	0.241	0.239	0.0542	0.0540	1.5	1.458
10	5/1/95	15	28.4	450	450	0.041	0.078	0.075	0.100	0.183	0.185	0.0407	0.0411	1.5	1.226
11	5/1/95	15	28.6	450	449.8	0.041	0.078	0.074	0.067	0.120	0.153	0.0271	0.0344	1.5	1.358
12	5/2/95	60	59.8	450	450	0.267	0.266	0.262	0.873	0.857	0.862	0.0545	0.0549	4	5.131
13	5/2/95	60	59.5	450	450.2	0.267	0.265	0.266	0.655	0.653	0.654	0.0409	0.0410	4	3.391
14	5/2/95	60	59.7	450	451.3	0.267	0.265	0.262	0.437	0.428	0.508	0.0273	0.0324	4	2.588
15	5/2/95	60	60.1	850	849.9	0.222	0.222	0.22	0.727	0.720	0.725	0.0546	0.0549	4	3.324
16	5/2/95	60	60	850	849.5	0.222	0.222	0.222	0.545	0.545	0.545	0.0409	0.0408	4	3.047
17	5/2/95	60	59.7	850	849.4	0.222	0.221	0.226	0.363	0.370	0.378	0.0273	0.0278	4	2.736
18	5/2/95	60	60.1	1050	1052.0	0.207	0.207	0.205	0.593	0.588	0.592	0.0478	0.0481	4	2.679
19	5/2/95	60	59.8	1050	1048.1	0.207	0.206	0.206	0.423	0.421	0.423	0.0341	0.0341	4	2.632
20	5/2/95	60	59.9	1050	1051.6	0.207	0.207	0.205	0.253	0.251	0.252	0.0204	0.0205	4	2.507
21	5/2/95	150	150.6	850	851.1	0.555	0.557	0.552	1.818	1.809	1.868	0.0546	0.0564	4	2.483
22	5/2/95	150	150	850	850.7	0.555	0.555	0.554	1.363	1.361	1.362	0.0409	0.0410	4	2.282
23	5/2/95	150	149.7	850	851.0	0.555	0.554	0.560	0.910	0.918	0.900	0.0273	0.0268	4	2.299
24	5/11/95	150	150.5	1200	1196.9	0.493	0.495	0.485	1.413	1.390	1.402	0.0478	0.0482	4	2.287
24	5/11/95	150	150.1	1200	1199.8	0.493	0.493	0.486	1.413	1.393	1.415	0.0478	0.0485	4	2.274
25	5/11/95	150	150.1	1200	1201.5	0.493	0.493	0.486	1.010	0.996	0.981	0.0341	0.0336	4	2.221
26	5/11/95	150	149.8	1200	1202.4	0.493	0.492	0.490	0.605	0.601	0.590	0.0205	0.0201	4	2.185
26	5/11/95	150	149.7	1200	1203.1	0.493	0.492	0.491	0.605	0.603	0.596	0.0205	0.0202	4	2.197
27	5/11/95	250	252.3	850	849.8	0.926	0.935	0.913	2.652	2.614	2.671	0.0477	0.0488	4	2.371
28	5/11/95	250	252.1	850	852.1	0.926	0.933	0.911	1.895	1.864	1.818	0.0341	0.0333	4	1.996
29	5/11/95	250	250.7	850	852.6	0.926	0.928	0.932	1.137	1.144	1.187	0.0205	0.0212	4	2.037
30	5/12/95	250	248.7	1200	1200.8	0.822	0.818	0.816	2.355	2.338	2.338	0.0477	0.0478	4	4.062
31	5/12/95	250	248.6	1200	1198.0	0.822	0.818	0.82	1.683	1.679	1.656	0.0341	0.0337	4	3.452
32	5/12/95	250	248	1200	1197.6	0.822	0.816	0.829	1.010	1.019	1.012	0.0205	0.0204	4	1.96
33	5/12/95	250	250.8	1200	1200.5	0.65	0.652	0.645	1.862	1.847	1.884	0.0477	0.0487	2.5	1.417
34	5/12/95	250	250.3	1200	1202.8	0.65	0.650	0.654	1.330	1.338	1.346	0.0341	0.0343	2.5	1.297
35	5/12/95	250	248	1200	1202.7	0.65	0.644	0.645	0.798	0.792	0.789	0.0205	0.0204	2.5	1.236

TEST POINT		Calc. f/a from Emissions	Comb. Efficiency	EXHAUST GAS ANALYSIS NO ppm	NOx ppm	CO ppm	CO2 %	HC ppm	O2 %	DOME TEMPERATURES FACE #1 F	FACE #2 F	INJ #1 F	INJ #2 F	FUEL LINE F	fars/farm
0		0.0599	91.5	34	52	20670	10.9	390	4	-	926	85	86	82	0.969
1		0.0487	95.359	18	33	6866	9.5	440	6.7		730	81	81	84	1.023
2		0.0345	94.587	2.4	9	3784	6.7	620	11		352	81	81	84	0.991
3		0.0656	94.177	72	85	13242	12.8	600	1.9		1000	89	88	84	1.068
4		0.0533	98.381	45	62	2765	11.5	175	5.2		960	87	87	84	1.097
5		0.0397	98.107	8	20	1593	8.1	240	9.1		647	85	85	84	1.151
6		0.0573	98.948	96	110	1922	12.2	110	3.7		1225	416	416	89	1.053
7		0.0419	99.118	20	38	1160	8.6	64	8.3		825	424	423	90	1.029
8		0.0391	97.955	6	14	1466	7.9	280	9.1		779	420	419	91	1.060
9		0.0586	98.301	190	220	3393	12.5	160	3.4		1207	421	422	91	1.085
10		0.0451	99.788	49	66	247	9.5	22	7.3		1009	419	420	91	1.097
11		0.0377	99.791	10	13	199	7.9	20	9.5		832	421	422	91	1.096
12		0.0576	99.543	160	215	804	11.8	40	3.4		1380	430	428	80	1.049
13		0.0447	99.83	53	66	199	9.5	17	7.4		896	431	429	81	1.090
14		0.0383	99.215	9.4	19	1256	9.2	36	10.8		678	434	431	81	1.182
15		0.0568	99.422	850	880	1133	11.8	6.8	3.6		1634	808	802	87	1.035
16		0.0431	99.879	70	86	182	9.2	4	7.9		1433	813	806	89	1.056
17		0.0287	99.862	2.8	5.4	150	5.8	2.5	11.9		982	815	808	91	1.032
18		0.0501	99.582	780	840	670	10.6	2	5.7		1612	1007	999	93	1.042
19		0.0357	99.916	64	75	100	7.4	1.2	10		1370	1007	1001	94	1.047
20		0.0199	99.317	0	2.5	517	3.8	4.8	13.8		1093	1020	1016	96	0.971
21		0.0599	99.625	1500	1750	501	12.8	1.2	2.6		1225	817	815	96	1.062
22		0.0450	99.888	300	420	117	9.7	0.3	7.4		1045	825	818	97	1.098
23		0.0301	99.964	8.3	40	34	6	0.7	11.3		930	830	822	98	1.123
24		0.0557	99.258	1600	2200	1282	11.8	1.2	3.9	1494	1498	1159	1158	540	1.156
24		0.0563	99.146	1700	2250	1541	11.8	1.6	3.8	1457	1447	1162	1161	540	1.161
25		0.0393	99.816	600	920	83	8.1	0.2	8.8	1289	1309	1167	1165	630	1.170
26		0.0232	99.907	88	160	50	4.5	0.1	12.8	1233	1249	1171	1169	663	1.154
26		0.0245	99.91	110	160	50	4.8	0	12.7	1232	1247	1172	1170	662	1.213
27		0.0555	99.755	600	720	407	11.8	0	4	930	942	835	830	370	1.137
28		0.0392	99.941	135	190	50	8.1	0.1	8.9	948	1029	831	829	416	1.177
29		0.0247	97.207	10	30	2765	4.5	2.4	12.5	859	897	833	832	496	1.165
30		0.0448	99.847	560	920	83	9.5	0	7.3	1431	1415	1176	1171	506	0.937
31		0.0318	99.92	68	380	50	6.5	0	10.9	1278	1340	1173	1170	573	0.944
32		0.0187	99.918	82	245	17	3.6	0	14.1	1274	1268	1175	1176	629	0.917
33		0.0458	99.87	550	900	50	9.7	0	7	1597	1575	1167	1166	454	0.940
34		0.0322	99.934	150	380	17	6.7	0	11	1340	1391	1174	1178	529	0.939
35		0.0192	99.896	94	250	34	3.8	0	14.2	1267	1295	1189	1187	648	0.941

								Constants for flame Temp. calculation:						
								1.67E+08	2.23E+08	-2921.31	15972.3	-7E+07	32214690	
								-462.557	-280834	1583.426	-3.3E+08	14578990	7.938999	
Air Density	Pressure Drop	Effective Area		Phi-s	Phi-m	T3 K	P3 atm	tks Tflame (fars) K	tkm Tflame (farm) K	Trs Tflame (fars) R	Trm Tflame (farm) R	Comb. nefficienc	NOXei	COei
0.13291736	1.307775	0.54182656		0.879	0.907	299	1.80	2159	2187	3885	3937	0.08517	1.318904	319.1898
0.13231743	1.200408	0.57432693		0.715	0.698	299	1.80	1928	1901	3471	3422	0.04641	1.064061	134.7891
0.13074099	1.073493	0.61097953		0.506	0.511	299	1.78	1532	1541	2757	2773	0.05413	0.41579	106.4341
0.14002463	0.63476	0.48173139		0.963	0.901	300	1.90	2235	2182	4023	3928	0.05823	1.976823	187.4999
0.14002463	0.56392	0.52706592		0.782	0.713	300	1.90	2035	1927	3663	3468	0.01619	1.73414	47.0854
0.1394987	0.48267	0.57654138		0.583	0.506	300	1.90	1687	1532	3036	2758	0.01893	0.79649	38.62466
0.08068152	1.473424	0.5293582		0.841	0.798	506	1.85	2226	2174	4007	3912	0.01052	2.925584	31.12231
0.07988447	0.851753	0.70543633		0.615	0.597	509	1.84	1884	1852	3391	3333	0.00882	1.437147	26.71002
0.08107616	0.837291	0.67754467		0.574	0.541	505	1.86	1805	1744	3250	3139	0.02045	0.571953	36.46407
0.08375108	0.412614	0.59553219		0.860	0.792	507	1.93	2248	2167	4047	3900	0.01699	5.645392	53.00952
0.08423174	0.348184	0.65517857		0.662	0.603	506	1.93	1965	1861	3537	3349	0.00212	2.285314	5.20712
0.08484357	0.388388	0.60985989		0.553	0.505	505	1.95	1767	1673	3181	3012	0.00209	0.541337	5.045172
0.1773612	3.068338	0.53132603		0.845	0.806	506	4.07	2239	2190	4030	3942	0.00457	5.967807	13.58723
0.17643266	2.017645	0.66697644		0.656	0.602	506	4.05	1960	1862	3528	3352	0.0017	2.286586	4.197545
0.17681202	1.545036	0.74992323		0.562	0.475	506	4.06	1788	1619	3219	2914	0.00785	0.671835	27.03943
0.12383265	1.997724	0.66172581		0.833	0.806	728	4.09	2353	2321	4236	4178	0.00578	24.36573	19.09964
0.12366437	1.8282	0.69848896		0.632	0.599	728	4.08	2064	2006	3716	3611	0.00121	3.077422	3.965141
0.12305544	1.633392	0.7541427		0.421	0.408	727	4.06	1676	1651	3018	2972	0.00138	0.306323	5.180541
0.10728068	1.610079	0.73792161		0.735	0.706	840	4.09	2296	2254	4133	4057	0.00418	25.97661	12.61469
0.10702122	1.573936	0.75089543		0.524	0.500	838	4.07	1948	1906	3506	3430	0.00084	3.338794	2.71036
0.10695197	1.501693	0.76526106		0.292	0.301	840	4.07	1518	1535	2732	2762	0.00683	0.214085	26.95481
0.31001877	3.739398	0.76698162		0.879	0.828	728	10.24	2420	2365	4357	4258	0.00375	44.92428	7.830318
0.30887787	3.423	0.80603451		0.660	0.602	728	10.20	2124	2023	3823	3641	0.00112	14.26613	2.419588
0.30818958	3.441603	0.81346596		0.442	0.393	728	10.18	1724	1630	3102	2933	0.00036	2.197917	1.137441
0.24515403	3.441935	0.78988089		0.817	0.707	921	10.24	2468	2322	4443	4180	0.00742	60.84109	21.58544
0.24407526	3.413274	0.79658024		0.826	0.712	922	10.21	2479	2330	4462	4194	0.00854	62.08882	25.89001
0.24382553	3.333721	0.80644132		0.577	0.493	923	10.21	2111	1962	3800	3532	0.00184	37.4292	2.055888
0.24369353	3.279685	0.81997145		0.340	0.295	924	10.21	1682	1597	3028	2874	0.00093	11.71596	2.229084
0.2431041	3.291106	0.82121171		0.360	0.296	924	10.19	1718	1600	3092	2880	0.0009	10.9845	2.089916
0.30867799	3.551758	1.30447866		0.814	0.716	728	10.19	2349	2213	4228	3984	0.00245	20.05897	6.903499
0.51856684	5.031916	0.84370385		0.575	0.489	729	17.15	1982	1819	3567	3274	0.00059	7.7331	1.238993
0.51549062	5.106759	0.85935689		0.362	0.311	729	17.05	1573	1471	2832	2648	0.02793	2.071778	116.2561
0.40416368	10.102194	0.60414945		0.657	0.701	923	16.92	2255	2325	4060	4185	0.00153	31.91821	1.753184
0.40468344	8.581672	0.65828036		0.467	0.494	921	16.91	1918	1969	3452	3545	0.0008	19.27036	1.543743
0.40380415	4.8608	0.88522971		0.274	0.299	921	16.87	1557	1605	2803	2890	0.00082	22.43945	0.947968
0.40765004	3.553836	0.80169283		0.672	0.715	923	17.06	2279	2345	4102	4221	0.0013	30.59149	1.034729
0.4062746	3.246391	0.85193845		0.472	0.503	924	17.03	1931	1987	3475	3577	0.00066	18.70476	0.509467
0.40256556	3.06528	0.86865445		0.282	0.299	924	16.87	1574	1608	2833	2894	0.00104	21.68311	1.795391

NOx severity parameter	GSL-S	gslm	rho4s	rho4m	ts	tm	eigasl-s	eigasl-m	eic-s	eic-m	EI(NOx) (again)
0.0244	2.81	3.13	0.0175	0.0173	4.54	4.61	12.77	14.45	2.12	2.29	1.318904
0.0244	0.96	0.82	0.0196	0.0199	5.34	5.30	5.11	4.34	1.34	1.27	1.064061
0.0243	0.05	0.06	0.0245	0.0244	6.56	6.58	0.33	0.36	0.86	0.86	0.41579
0.0251	3.70	3.08	0.0184	0.0188	8.20	7.90	30.33	24.28	3.99	3.36	1.976823
0.0251	1.66	0.95	0.0202	0.0214	9.13	8.83	15.15	8.37	2.41	1.70	1.73414
0.0250	0.19	0.05	0.0244	0.0268	11.55	11.11	2.22	0.57	1.06	0.88	0.79649
0.0714	3.59	2.98	0.0173	0.0177	6.05	5.90	21.70	17.56	7.28	6.05	2.925584
0.0725	0.74	0.61	0.0209	0.0213	7.15	7.07	5.30	4.31	2.42	2.13	1.437147
0.0713	0.45	0.30	0.0220	0.0228	8.14	7.97	3.68	2.35	1.92	1.52	0.571953
0.0730	3.86	2.90	0.0186	0.0193	11.07	10.63	42.72	30.86	13.81	10.21	5.645392
0.0727	1.17	0.64	0.0214	0.0226	12.83	12.40	15.00	7.98	5.37	3.24	2.285314
0.0728	0.35	0.17	0.0239	0.0253	14.61	14.12	5.08	2.44	2.37	1.56	0.541337
0.0979	3.74	3.17	0.0380	0.0388	6.17	6.03	23.09	19.08	10.24	8.60	5.967807
0.0977	1.14	0.65	0.0440	0.0463	7.39	7.16	8.42	4.66	4.25	2.72	2.286586
0.0982	0.40	0.11	0.0488	0.0539	9.10	8.55	3.67	0.95	2.33	1.21	0.671835
0.3075	5.23	4.80	0.0370	0.0375	7.05	6.92	36.87	33.22	48.07	43.38	24.36573
0.3070	1.90	1.44	0.0423	0.0435	8.23	8.04	15.64	11.58	20.83	15.64	3.077422
0.3063	0.18	0.14	0.0519	0.0527	9.85	9.70	1.75	1.40	3.05	2.62	0.306323
0.5479	4.47	3.93	0.0382	0.0389	7.91	7.75	35.38	30.46	81.60	70.37	25.97661
0.5408	1.07	0.84	0.0448	0.0458	9.39	9.18	10.02	7.72	23.40	18.23	3.338794
0.5466	0.04	0.05	0.0577	0.0571	11.48	11.69	0.51	0.61	1.98	2.21	0.214085
0.4456	6.12	5.39	0.0910	0.0931	7.07	6.84	43.30	36.85	81.22	69.25	44.92428
0.4444	2.45	1.56	0.1035	0.1087	8.41	8.08	20.63	12.62	39.03	24.20	14.26613
0.4444	0.25	0.12	0.1272	0.1346	10.62	10.03	2.70	1.22	5.82	3.08	2.197917
1.1968	6.74	4.82	0.0893	0.0949	8.64	8.00	58.26	38.54	291.36	193.02	60.84109
1.2055	6.88	4.92	0.0887	0.0944	8.59	7.93	59.08	38.98	297.58	196.63	62.08882
1.2113	2.33	1.15	0.1042	0.1121	10.32	9.55	24.05	11.01	122.22	56.40	37.4292
1.2145	0.19	0.09	0.1309	0.1379	12.92	11.83	2.40	1.08	12.97	6.30	11.71596
1.2159	0.24	0.09	0.1279	0.1373	13.19	11.72	3.22	1.10	17.13	6.41	10.9845
0.4430	5.17	3.43	0.0933	0.0991	4.72	4.44	24.42	15.22	45.91	28.93	20.05897
0.5491	1.27	0.49	0.1869	0.2037	9.97	9.28	12.71	4.58	29.90	11.30	7.7331
0.5487	0.07	0.03	0.2341	0.2503	12.22	11.25	0.91	0.31	2.90	1.54	2.071778
1.4795	3.95	4.85	0.1586	0.1539	7.48	7.72	29.53	37.43	182.85	231.56	31.91821
1.4675	0.90	1.20	0.1876	0.1828	8.97	9.25	8.11	11.05	50.42	68.39	19.27036
1.4644	0.06	0.10	0.2341	0.2271	10.91	11.53	0.70	1.14	5.11	7.76	22.43945
1.4832	4.25	5.12	0.1627	0.1581	9.72	10.01	41.30	51.24	256.08	317.53	30.59149
1.4918	0.97	1.31	0.1919	0.1864	11.43	11.80	11.10	15.49	69.81	97.09	18.70476
1.4859	0.07	0.10	0.2333	0.2284	14.32	14.88	1.07	1.50	7.45	10.09	21.68311

LEAN BLOW-OUT CONDITIONS — CX area= 10.57

TEST POINTS	DATE	AIR PRES	AIR TEMP	AIR FLOW	FUEL FLOW	F/A (lbo)	Vref	Lefebvre Parameter	Phi(lbo)	AIR DENSITY
0-2	5/1/95	26.2	78.8	0.153	0.305	0.0332	15.88	0.363	0.487	0.131242
0-2	5/1/95	26.4	78.8	0.156	0.305	0.0325	16.07	0.364	0.477	0.132244
0-2	5/1/95	26.5	79.3	0.159	0.316	0.0331	16.33	0.365	0.486	0.132622
3-5	5/1/95	27.9	79.9	0.102	0.153	0.0251	9.96	0.336	0.368	0.139473
3-5	5/1/95	28.1	79.9	0.103	0.189	0.0307	9.99	0.336	0.450	0.140473
3-5	5/1/95	28.0	79.7	0.105	0.186	0.0296	10.21	0.337	0.434	0.140025
6-8	5/1/95	27.3	449.0	0.118	0.243	0.0342	19.83	0.278	0.502	0.081058
	5/1/95	27.0	449.6	0.119	0.249	0.0347	20.23	0.279	0.509	0.080115
	5/1/95	27.3	449.9	0.119	0.240	0.0336	20.01	0.278	0.493	0.080978
9-11	5/1/95	28.4	448.9	0.080	0.135	0.0279	12.92	0.259	0.409	0.084334
	5/1/95	28.3	453.0	0.083	0.148	0.0297	13.51	0.260	0.436	0.083659
	5/1/95	28.6	451.7	0.086	0.144	0.0281	13.83	0.261	0.412	0.084667
12-14	5/2/95	59.4	450.4	0.262	0.472	0.0301	20.26	0.270	0.442	0.176097
	5/2/95	59.6	450.6	0.263	0.478	0.0303	20.28	0.270	0.445	0.176652
15-17	5/2/95	59.9	848.1	0.229	0.302	0.0219	25.24	0.208	0.321	0.12359
	5/2/95	59.9	848.1	0.221	0.283	0.0214	24.35	0.207	0.314	0.12359
18-20	5/2/95	59.8	1053.1	0.205	0.200	0.0162	26.17	0.181	0.238	0.106668
	5/2/95	59.7	1052.4	0.203	0.202	0.0166	25.95	0.181	0.244	0.106538
21-23	5/2/95	148.6	850.7	0.590	0.688	0.0194	26.26	0.202	0.285	0.305995
	5/2/95	148.3	851.7	0.595	0.674	0.0189	26.56	0.202	0.277	0.305144
24-26	5/11/95	149.0	1204.0	0.524	0.385	0.0122	29.53	0.160	0.179	0.241675
	5/11/95	149.2	1203.6	0.519	0.373	0.012	29.20	0.160	0.176	0.242058
27-29	5/11/95	249.2	851.3	0.995	1.036	0.0174	26.42	0.198	0.255	0.512914
	5/11/95	247.3	851.3	0.983	1.067	0.0181	26.30	0.198	0.266	0.509004
30-32	5/12/95	248.6	1197.5	0.869	0.79	0.0151	29.24	0.158	0.222	0.404806
	5/12/95	247.7	1196.8	0.854	0.735	0.0143	28.82	0.157	0.210	0.40351
33-35	5/12/95	246.6	1202.8	0.712	0.522	0.0122	24.23	0.152	0.179	0.400269
	5/12/95	245.5	1202.2	0.663	0.54	0.0136	22.65	0.151	0.200	0.398627

Note 1: Desired conditions modified by T^0.5/P to keep Mach number constant.
Note 2: Adjusted to keep fuel-air ratio at the desired value.

EVALUATION OF PROBE UNIFORMITY

Test point:

Probe #	Date	Air Pres.	Air Temp.	Air Flow Rate	Fuel Flow Rate	f/a meas.	f/a Calc	Comb Efficiency	CO ppm	CO2 %	HC ppm	NO ppm	NOX ppm	O2 %
1														
2														
3														
4														

APPENDIX D

SwRI Dome 4 Data (GEAE Configuration 11)

SUMMARY OF TEST DATA FOR HSCT CYCLONE SWIRLERS

Test Dome # 4 (CONFIG 11)

OPERATING CONDITIONS

Test Point	Date	Air Pres psia		Air Temp deg F		Air Flow lbm/s			Fuel Flow lbm/min			F/A		DP(dome) %Pa	
		Desired	Actual	Desired	Actual	Desired	(note 1)	Actual	Desired	(note 2)	Actual	Desired	Actual	Desired	Actual
0	7/17/95	15	26.6	70	87.5	0.087	0.152	0.151	0.320	0.558	0.565	0.0616	0.0622	4	4.105
1	7/17/95	15	26.7	70	87.8	0.087	0.152	0.15	0.250	0.431	0.430	0.0479	0.0478	4	4.150
2	7/17/95	15	26.9	70	87.6	0.087	0.153	0.139	0.178	0.285	0.350	0.0342	0.0419	4	3.792
3	7/17/95	15	28.2	70	87.4	0.053	0.098	0.087	0.197	0.323	0.331	0.0618	0.0631	1.5	1.427
4	7/17/95	15	28	70	87.4	0.053	0.097	0.093	0.153	0.269	0.269	0.0482	0.0483	1.5	1.615
4	7/17/95		28		87.3			0.093			0.270		0.0486		1.680
5	7/17/95	15	27.8	70	87.3	0.053	0.097	0.100	0.110	0.208	0.209	0.0346	0.0350	1.5	1.934
6	7/17/95	15	27.4	450	449	0.067	0.122	0.107	0.218	0.349	0.352	0.0543	0.0548	4	3.994
7	7/17/95	15	26.6	450	453.3	0.067	0.119	0.132	0.163	0.322	0.321	0.0406	0.0404	4	3.923
8	7/17/95	15	26.9	450	453.5	0.067	0.120	0.125	0.108	0.202	0.284	0.0269	0.0379	4	3.227
9	7/17/95	15	28.3	450	448.5	0.041	0.077	0.076	0.133	0.247	0.247	0.0542	0.0544	1.5	1.651
10	7/17/95	15	28.1	450	449.6	0.041	0.077	0.083	0.100	0.202	0.203	0.0407	0.0405	1.5	1.733
11	7/17/95	15	28.1	450	454.1	0.041	0.077	0.084	0.067	0.137	0.183	0.0271	0.0363	1.5	1.710
12	7/17/95	60	60.3	450	450	0.267	0.268	0.252	0.873	0.824	0.834	0.0545	0.0552	4	4.143
12	7/18/95		60.1		451.5			0.268			0.878		0.0546		3.884
13	7/17/95	60	59.4	450	449.1	0.267	0.264	0.299	0.655	0.734	0.738	0.0409	0.0411	4	4.359
14	7/17/95	60	58.2	450	452.7	0.267	0.259	0.297	0.437	0.486	0.674	0.0273	0.0378	4	3.616
15	7/17/95	60	62.1	850	849.3	0.222	0.136	0.22	0.727	0.720	0.693	0.0546	0.0525	4	2.26
15	7/18/95		59.5		847.6			0.269			0.878		0.0544		4.057
16	7/18/95	60	59.6	850	848.7	0.222	0.221	0.265	0.545	0.651	0.646	0.0409	0.0406	4	4.049
17	7/18/95	60	59.4	850	851.5	0.222	0.220	0.27	0.363	0.442	0.443	0.0273	0.0274	4	4.014
18	7/18/95	60	60.8	1050	1050.0	0.207	0.210	0.251	0.593	0.719	0.716	0.0478	0.0475	4	4.101
19	7/18/95	60	60.8	1050	1050	0.207	0.210	0.251	0.423	0.513	0.516	0.0341	0.0343	4	3.946
20	7/18/95	60	60.6	1050	1050	0.207	0.209	0.254	0.253	0.311	0.306	0.0204	0.0201	4	4.092
21	7/19/95	150	150.3	850	850	0.555	0.556	0.577	1.818	1.890	1.927	0.0546	0.0557	4	3.713
22	7/19/95	150	150.1	850	850	0.555	0.555	0.624	1.363	1.533	1.508	0.0409	0.0403	4	3.892
23	7/19/95	150	151.6	850	850.0	0.555	0.561	0.699	0.910	1.146	1.134	0.0273	0.0271	4	3.931
24	7/19/95	150	150.6	1200	1200	0.493	0.495	0.513	1.413	1.471	1.470	0.0478	0.0478	4	3.686
25	7/19/95	150	149.3	1200	1200	0.493	0.491	0.533	1.010	1.092	1.090	0.0341	0.0341	4	3.876
26	7/19/95	150	150.9	1200	1200	0.493	0.496	0.525	0.605	0.644	0.655	0.0205	0.0208	4	3.686
27	7/19/95	250	252.3	850	850	0.926	0.935	1.033	2.652	2.958	2.861	0.0477	0.0462	4	3.591
28	7/19/95	250	246.9	850	850	0.926	0.915	1.173	1.895	2.400	2.322	0.0341	0.0330	4	3.972
29	7/19/95	250	247.4	850	850	0.926	0.916	1.143	1.137	1.403	1.442	0.0205	0.0210	4	3.871
30	7/19/95	250	244.2	1200	1200	0.822	0.803	0.898	2.355	2.573	2.558	0.0477	0.0476	4	4.174
31	7/19/95	250	250.6	1200	1200.0	0.822	0.824	0.934	1.683	1.913	1.845	0.0341	0.0329	4	4.070
32	7/19/95	250	249.9	1200	1200	0.822	0.822	0.957	1.010	1.176	1.110	0.0205	0.0193	4	4.041
33	7/19/95	250	252.4	1200	1200	0.65	0.656	0.711	1.862	2.036	2.088	0.0477	0.0492	2.5	2.174
34	7/19/95	250	246.6	1200	1200	0.65	0.641	0.75	1.330	1.535	1.559	0.0341	0.0347	2.5	2.518
35	7/19/95	250	247.4	1200	1200	0.65	0.643	0.818	0.798	1.005	0.994	0.0205	0.0202	2.5	2.856

Note 1: Desired conditions modified by T^0.5/P to keep Mach number constant.

TEST POINT		Calc. f/a from Emissions	Comb. Efficiency	EXHAUST GAS ANALYSIS NO ppm	NOx ppm	CO ppm	CO2 %	HC ppm	O2 %	DOME TEMPERATURES FACE #1 F	FACE #2 F	COVER #1 F	COVER #2 F	FUEL LINE F	fars/farm
0		0.0602	91.5	30	50	20670	10.9	375	3.9	799	566	122	104		0.968
1		0.0452	96.173	7	18	5343	8.9	325	7.6	548	382	134	321		0.946
2		0.0407	96.357	5	16	3720	8.1	400	9	458	340	112	116		0.971
3		0.0662	92.476	86	98	20670	12.2	280	1.9	933	692	148	511		1.049
4		0.0528	98.392	36	58	2519	11.2	190	5.2	859	597	162	607		1.093
		0.0524	98.657	42	60	2471	10.9	94	5.2	857	596	163	819		1.078
5		0.0359	98.001	5	14	2026	7.1	150	10	534	375	132	365		1.026
6		0.0579	98.779	145	150	1702	12.2	200	3.5	1177	896	402		94	1.057
7		0.0413	97.953	6	15	2026	8.1	220	8.3	739	545	407		120	1.022
8		0.0357	96.548	3	5	3720	6.9	225	10.2	556	386	407		140	0.942
9		0.059	97.733	225	250	5717	12.5	64	3.4	1216	885	450	227	93	1.085
10		0.0443	99.77	22	32	149	9.5	42	7.7	1012	727	434	291	110	1.094
11		0.0401	99.332	6	12	756	8.4	60	8.9	829	559	434	401	125	1.105
12		0.0588	99.542	300	310	1067	12.5	7.5	3.1	1298	993	414	183	85	1.065
		0.0574	0.99483	225	230	1224	12.8	16	3.7	1330	870	392		95	1.051
13		0.0447	99.83	22	28	299	9.5	5.2	7.4	894	650	409	280	128	1.088
14		0.0404	99.469	7	12	756	8.4	26	8.7	751	539	417	595	144	1.069
15		0.0547	99.579	860	900	756	11.8	3.2	4.4	1406	990	804		212	1.042
15		0.0549	99.477	620	640	1067	11.8	7	4.4	1409	889	776		238	1.009
16		0.0414	99.965	150	165		8.9	4.9	8.5	1270	789	788		261	1.020
17		0.0281	99.859	6	12	149	5.8	2.9	12.3	1047	586	800		301	1.026
18		0.0471	99.597	820	840	603	10.3	2	6.9	1524	975	976		270	0.992
19		0.0349	99.773	145	160	299	7.4	1	10.5	1357	867	990		283	1.017
20		0.0196	99.456	0.5	5	450	3.9	0.9	14.7	1128	692	1007		311	0.975
21		0.059	98.785	1010	1025	3028	13.2	14	3.3	1321	1173	1206		351	1.059
22		0.0447	99.744	1000	1025	149	10.3	12	8.1	1133	995	881		434	1.109
23		0.0306	99.826	40	68	149	6.5	10	11.8	1008	894	822		491	1.129
24		0.0519	99.541	1040	1750	603	11.2	9.8	5.2	1581	1230	1570		455	1.086
25		0.0386	99.763	580	760	149	8.1	7	9.2	1473	992	1546		426	1.132
26		0.0254	99.774	156	340	149	5.2	4	13	1334	827	1510		429	1.221
27		0.0469	99.727	340	580	450	10.2	0.2	6.9	1050	700	1078		265	1.015
28		0.0341	99.874	80	190	149	7.1	0.4	10.6	1031	608	828		318	1.033
29		0.024	98.807	0	20	911	4.8	45	13.4	891	500	837		403	1.143
30		0.048	99.712	1000	1020	299	10.9	5.9	6.8	1528	1017	1619		410	1.008
31		0.0341	99.833	160	460	149	7.1	2.2	10.6	1454	905	1430		497	1.036
32		0.021	99.579	120	320	299	4.3	2.9	14.3	1313	752	1373		561	1.088
33		0.0493	99.548	560	880	756	10.3	2.5	5.9	1616	1103	1695		464	1.002
34		0.0381	99.816	360	750	149	8.4	2	9.8	1442	881	1464		551	1.098
35		0.0228	99.777	110	310	149	4.6	1.5	13.7	1314	761	1214		614	1.129

								Constants for flame Temp. calculation:							
								1.67E+08	2.23E+08	-2921.31	15972.3	-7E+07	32214690		
								-462.557	-280834	1583.426	-3.3E+08	14578990	7.938999		
Air Density	Pressure Drop	Effective Area		Phi-s	Phi-m	T3 K	P3 atm	tks Tflame (fars) K	tkm Tflame (farm) K	Trs Tflame (fars) R	Trm Tflame (farm) R	Comb. nefficienc	NOXei	COei	%NO2
0.13112828	1.09193	0.59699692		0.883	0.913	304	1.81	2166	2195	3899	3952	0.0848	1.268323	319.2266	0.4
0.13154916	1.10805	0.58777115		0.663	0.701	304	1.82	1842	1909	3315	3436	0.03827	0.627224	113.3533	0.611111
0.13258295	1.020048	0.56545933		0.597	0.615	304	1.83	1718	1752	3092	3153	0.03643	0.620072	87.77353	0.6875
0.13904109	0.402414	0.55023961		0.971	0.926	304	1.92	2243	2208	4038	3974	0.07524	2.261494	290.408	0.122449
0.13805498	0.4522	0.55684247		0.775	0.709	304	1.90	2027	1922	3648	3459	0.01608	1.667954	44.1045	0.37931
0.1380802	0.4704	0.54591409		0.769	0.713	304	1.90	2018	1929	3632	3472	0.01343	1.774095	44.4833	0.3
0.13709392	0.537652	0.55103729		0.527	0.514	304	1.89	1577	1550	2839	2790	0.01999	0.631121	55.60617	0.642857
0.08135524	1.094356	0.53647863		0.850	0.804	505	1.86	2236	2181	4024	3926	0.01221	3.993618	27.58884	0.033333
0.07860805	1.043518	0.68949508		0.606	0.593	507	1.81	1867	1843	3361	3317	0.02047	0.594404	48.87967	0.6
0.0794772	0.868063	0.7119571		0.524	0.556	508	1.83	1712	1774	3081	3193	0.03452	0.226114	102.4235	0.4
0.08407373	0.467233	0.57366372		0.866	0.798	505	1.93	2253	2173	4056	3912	0.02267	6.305927	87.79621	0.1
0.08337862	0.486973	0.61622458		0.650	0.594	505	1.91	1945	1844	3500	3320	0.0023	1.108939	3.143711	0.3125
0.08296816	0.48051	0.62938018		0.588	0.533	508	1.91	1835	1729	3303	3112	0.00668	0.466721	17.90178	0.5
0.17884416	2.498229	0.56401124		0.863	0.810	506	4.10	2258	2196	4065	3953	0.00458	8.111255	16.99767	0.032258
0.17795764	2.334284	0.62207156		0.842	0.801	506	4.09	2236	2185	4025	3933	0.990052	5.870627	19.02115	0.021739
0.17634925	2.589246	0.6619702		0.656	0.603	505	4.04	1960	1865	3527	3356	0.0017	0.969169	6.301028	0.214286
0.17210511	2.104512	0.73828591		0.593	0.555	507	3.96	1847	1775	3324	3194	0.00531	0.466908	17.90896	0.416667
0.12801217	1.40346	0.77649336		0.803	0.770	727	4.22	2318	2276	4172	4097	0.00421	24.99936	12.78518	0.044444
0.12281202	2.413915	0.73911423		0.806	0.798	726	4.05	2320	2311	4176	4160	0.00523	17.73032	17.99698	0.03125
0.12291503	2.413204	0.72792574		0.607	0.596	727	4.05	2021	2000	3638	3601	0.00035	6.115383	0	0.090909
0.12224103	2.384316	0.74819376		0.412	0.402	729	4.04	1660	1641	2989	2953	0.00141	0.680724	5.146057	0.5
0.10867395	2.493408	0.72136494		0.691	0.697	839	4.14	2231	2240	4016	4032	0.00403	26.74559	11.68931	0.02381
0.10867395	2.399168	0.73539619		0.512	0.503	839	4.14	1928	1912	3470	3441	0.00227	7.103703	8.082293	0.09375
0.10831647	2.479752	0.73320101		0.288	0.295	839	4.12	1508	1523	2715	2741	0.00544	0.418087	22.90909	0.9
0.30966101	5.580639	0.656646		0.866	0.817	728	10.22	2407	2353	4332	4235	0.01215	25.03852	45.03387	0.014634
0.30924895	5.841892	0.69453547		0.656	0.591	728	10.21	2116	2004	3809	3607	0.00256	32.77645	2.900835	0.02439
0.31233938	5.959396	0.76648454		0.449	0.398	728	10.31	1737	1638	3127	2948	0.00174	3.442612	4.592658	0.411765
0.2448588	5.551116	0.65827911		0.762	0.701	922	10.24	2400	2315	4320	4166	0.00459	51.26299	10.75429	0.405714
0.24274515	5.786868	0.67277657		0.566	0.500	922	#REF!	#REF!	#REF!	#REF!	#REF!	0.00237	30.89204	3.68738	0.236842
0.24534657	5.562174	0.67233813		0.373	0.305	922	10.16	1741	1615	3134	2907	0.00226	21.50568	5.737982	0.541176
0.51981019	9.060093	0.71211858		0.688	0.678	728	10.27	2170	2153	3905	3875	0.00273	18.67535	8.821693	0.413793
0.50868465	9.806868	0.78568643		0.500	0.484	728	16.80	1840	1809	3312	3257	0.00126	8.80919	4.205981	0.578947
0.50971479	9.576854	0.7739482		0.352	0.308	728	16.83	1552	1464	2793	2635	0.01193	1.347652	37.37358	1
0.39704196	10.192908	0.6678052		0.704	0.698	922	16.61	2329	2320	4192	4176	0.00288	30.78323	5.493939	0.019608
0.40744765	10.19942	0.68543133		0.500	0.483	922	17.05	1981	1949	3565	3507	0.00167	21.32697	4.205874	0.652174
0.40630953	10.098459	0.7068001		0.308	0.283	922	17.00	1623	1576	2922	2836	0.00421	24.37792	13.86808	0.625
0.41037425	5.487176	0.70883609		0.723	0.722	922	17.17	2358	2356	4245	4241	0.00452	27.97774	14.63357	0.363636
0.40094409	6.209388	0.71110818		0.559	0.509	922	16.78	2087	1997	3756	3594	0.00184	29.40056	3.556143	0.52
0.4022448	7.065744	0.72588839		0.335	0.296	922	16.83	1673	1601	3012	2882	0.00223	22.15842	6.484285	0.645161

NOx severity parameter	GSL-S	gslm	rho4s	rho4m	ts	tm	eigasl-s	eigasl-m	eic-s	eic-m	EI(NOx) (again)	NO2
0.0251	2.89	3.22	0.0177	0.0174	4.56	4.64	13.20	14.96	2.21	2.39	1.268323	20
0.0252	0.57	0.86	0.0208	0.0201	5.38	5.48	3.09	4.71	1.15	1.32	0.627224	11
0.0252	0.24	0.31	0.0226	0.0222	6.49	6.54	1.58	2.04	0.99	1.04	0.620072	11
0.0257	3.80	3.37	0.0186	0.0189	8.96	8.70	34.00	29.31	4.47	3.96	2.261494	12
0.0256	1.59	0.92	0.0204	0.0215	9.77	9.46	15.57	8.73	2.49	1.76	1.667954	22
0.0256	1.53	0.96	0.0205	0.0214	9.69	9.44	14.81	9.07	2.41	1.79	1.774095	18
0.0256	0.08	0.06	0.0259	0.0264	11.04	10.96	0.85	0.66	0.91	0.89	0.631121	9
0.0714	3.71	3.06	0.0176	0.0181	7.05	6.86	26.12	21.00	8.60	7.07	3.993618	5
0.0715	0.67	0.58	0.0205	0.0208	6.52	6.47	4.36	3.72	2.12	1.93	0.594404	9
0.0718	0.23	0.36	0.0228	0.0220	7.11	7.27	1.65	2.65	1.32	1.62	0.226114	2
0.0722	3.92	2.98	0.0185	0.0192	10.74	10.31	42.12	30.68	13.50	10.06	6.305927	25
0.0723	1.05	0.58	0.0213	0.0225	11.43	11.06	11.98	6.43	4.43	2.76	1.108939	10
0.0732	0.55	0.26	0.0226	0.0240	12.22	11.78	6.70	3.12	2.87	1.78	0.466721	6
0.0982	3.99	3.23	0.0384	0.0395	6.57	6.36	26.18	20.56	11.54	9.24	8.111255	10
0.0985	3.71	3.11	0.0387	0.0396	6.16	6.01	22.82	18.66	10.19	8.48	5.870627	5
0.0974	1.14	0.66	0.0435	0.0457	6.48	6.28	7.36	4.15	3.81	2.51	0.969169	6
0.0976	0.59	0.37	0.0455	0.0474	6.74	6.58	3.99	2.42	2.44	1.81	0.466908	5
0.3110	4.75	4.21	0.0393	0.0400	7.55	7.40	35.90	31.16	47.35	41.21	24.99936	40
0.3043	4.79	4.67	0.0369	0.0370	5.62	5.59	26.89	26.10	34.92	33.91	17.73032	20
0.3054	1.55	1.40	0.0424	0.0429	6.71	6.65	10.41	9.33	14.07	12.69	6.115383	15
0.3075	0.16	0.13	0.0515	0.0521	8.16	8.06	1.27	1.07	2.46	2.20	0.680724	6
0.5473	3.65	3.76	0.0392	0.0390	6.33	6.35	23.09	23.88	53.48	55.27	26.74559	20
0.5473	0.95	0.87	0.0454	0.0458	7.63	7.57	7.28	6.60	17.43	15.87	7.103703	15
0.5466	0.04	0.05	0.0578	0.0572	9.33	9.47	0.38	0.44	1.68	1.83	0.418087	4.5
0.4438	5.94	5.22	0.0902	0.0922	6.70	6.49	39.81	33.88	74.44	63.48	25.03852	15
0.4436	2.38	1.43	0.1022	0.1079	7.45	7.13	17.73	10.17	33.59	19.62	32.77645	25
0.4454	0.28	0.13	0.1257	0.1333	8.46	7.97	2.38	1.04	5.24	2.75	3.442612	28
1.2078	5.85	4.71	0.0906	0.0940	7.82	7.49	45.76	35.33	231.12	178.61	51.26299	710
#REF!	#REF!	#REF!	#REF!	#REF!	#REF!	#REF!	#REF!	#REF!	#REF!	#REF!	30.89204	180
1.2036	0.29	0.11	0.1238	0.1334	12.03	10.67	3.48	1.14	18.28	6.56	21.50568	184
0.4445	2.93	2.75	0.0980	0.0988	3.94	3.92	11.57	10.79	22.26	20.81	18.67535	240
0.5413	0.57	0.46	0.1932	0.1965	7.05	6.95	4.00	3.22	9.84	8.09	8.80919	110
0.5417	0.06	0.03	0.2298	0.2436	9.60	8.93	0.59	0.23	2.15	1.35	1.347652	20
1.4654	4.90	4.78	0.1507	0.1512	6.93	6.90	33.99	33.03	208.34	202.48	30.78323	20
1.4806	1.27	1.07	0.1820	0.1850	8.36	8.21	10.61	8.79	66.28	55.03	21.32697	300
1.4790	0.11	0.08	0.2215	0.2282	10.55	10.00	1.21	0.76	8.29	5.50	24.37792	200
1.4849	5.29	5.26	0.1570	0.1572	9.08	9.07	48.04	47.73	298.05	296.12	27.97774	320
1.4711	2.10	1.38	0.1727	0.1805	10.45	9.98	21.92	13.74	135.18	85.03	29.40056	390
1.4730	0.17	0.09	0.2154	0.2251	12.41	11.52	2.15	1.09	13.99	7.53	22.15842	200

LEAN BLOW-OUT CONDITIONS				CX area=	10.57			Note 2: Adjusted to keep fuel-air ratio at the desired value.		
TEST POINTS	DATE	AIR PRES	AIR TEMP	AIR FLOW	FUEL FLOW	F/A (lbo)	Vref	Lefebvre Parameter	Phi(lbo)	AIR DENSITY
0-2	7/17/95	26.9	87.8	0.140	0.331	0.0398	14.39	0.355	0.584	0.132535
0-2	7/17/95	26.9	87.7	0.142	0.329	0.0386	14.59	0.355	0.566	0.132559
0-2	7/17/95	26.9	87.7	0.144	0.330	0.0383	14.79	0.356	0.562	0.132559
3-5	7/17/95	27.5	87.2	0.114	0.147	0.0214	11.45	0.342	0.314	0.135639
3-5	7/17/95	27.7	87.4	0.103	0.201	0.0325	10.27	0.336	0.477	0.136576
3-5	7/17/95	27.8	87.4	0.099	0.202	0.0339	9.84	0.333	0.497	0.137069
6-8	7/17/95	26.9	451.8	0.123	0.284	0.0383	21.04	0.280	0.562	0.079625
	7/17/95	26.7	450.3	0.129	0.278	0.0359	22.19	0.283	0.527	0.079164
	7/17/95	26.7	449.1	0.128	0.283	0.0369	21.99	0.283	0.541	0.079268
9-11	7/17/95	27.9	451.5	0.090	0.171	0.0318	14.84	0.264	0.467	0.082613
	7/17/95	28	456.4	0.092	0.182	0.0332	15.19	0.264	0.487	0.082465
	7/17/95	28.1	453	0.083	0.176	0.0352	13.61	0.260	0.517	0.083068
12-14	7/17/95	59.4	447.9	0.298	0.643	0.0360	22.98	0.276	0.528	0.176582
	7/17/95	58.4	448.2	0.292	0.648	0.0370	22.91	0.276	0.543	0.173552
	7/17/95	59.2	447.4	0.289	0.643	0.0371	22.35	0.275	0.544	0.176085
15-17	7/18/95	59.1	851.7	0.280	0.364	0.0216	31.36	0.215	0.317	0.121605
	7/18/95	58.8	853.5	0.275	0.372	0.0226	31.00	0.215	0.332	0.120822
	7/18/95	58.8	853	0.275	0.365	0.0221	30.99	0.215	0.324	0.120868
18-20	7/18/95	60.5	1050	0.257	0.260	0.0169	32.37	0.188	0.248	0.108138
	7/18/95	60.7	1050	0.254	0.250	0.0164	31.88	0.187	0.241	0.108495
	7/18/95	60.6	1050	0.250	0.248	0.0165	31.43	0.187	0.242	0.108316
21-23	7/19/95	150.7	850	0.750	0.877	0.0195	32.90	0.209	0.286	0.310485
	7/19/95	148.5	850	0.730	0.871	0.0199	32.50	0.209	0.292	0.305952
	7/19/95	148.5	850	0.711	0.846	0.0198	31.65	0.208	0.291	0.305952
24-26	7/19/95	149.9	1200.0	0.571	0.319	0.0093	31.91	0.163	0.136	0.243721
	7/19/95	149	1200	0.559	0.358	0.0107	31.43	0.163	0.157	0.242257
	7/19/95	149.4	1200	0.55	0.391	0.0118	30.84	0.162	0.173	0.242908
27-29	7/19/95	244	850	1.156	1.262	0.0182	31.32	0.204	0.267	0.50271
	7/19/95	246.1	850	1.246	1.298	0.0174	33.47	0.206	0.255	0.507036
	7/19/95	246	850	1.191	1.439	0.0201	32.00	0.204	0.295	0.50683
30-32	7/19/95									
33-35	7/19/95	248.8	1200	0.865	0.574	0.0111	29.12	0.157	0.163	0.404521
	7/19/95	248.1	1200	0.876	0.5	0.0095	29.58	0.158	0.139	0.403383

EVALUATION OF PROBE UNIFORMITY														
Test point:	6													
Probe #	Date	Air Pres.	Air Temp.	Air Flow Rate	Fuel Flow Rate	f/a meas.	f/a Calc	Comb Efficiency	CO ppm	CO2 %	HC ppm	NO ppm	NOX ppm	O2 %
1	7/17/95	26.9	457.6	0.124	0.406	0.0544	0.0576	98.756	2858	12.2	49	180	195	3.6
2	7/17/95	26.9	451.5	0.123	0.404	0.0546	0.0583	98.093	4250	12.2	110	100	110	3.5
3	7/17/95	26.9	449.4	0.121	0.406	0.0558	0.0566	98.284	2858	11.8	210	110	120	4
4	7/17/95	26.9	448.1	0.121	0.396	0.0545	0.0551	98.892	2026	11.5	95	100	120	4.3

Test point: 16

Probe #	Date	Air Pres.	Air Temp.	Air Flow Rate	Fuel Flow Rate	f/a meas.	f/a Calc	Comb Efficiency	CO ppm	CO2 %	HC ppm	NO ppm	NOX ppm	O2 %
1	7/18/95	59.4	848.9	0.268	0.651	0.0404	0.0436	99.819	299	9.5	2	150	160	8
2	7/18/95	59.3	849.1	0.267	0.653	0.0407	0.0425	99.794	299	9.2	9	110	120	8.3
3	7/18/95	59.5	848.8	0.269	0.648	0.0401	0.0401	99.819	299	8.6	0.5	80	105	9
4	7/18/95	59.6	849.3	0.269	0.653	0.0405	0.0386	99.814	299	8.4	0	90	100	9.6
4	7/18/95	59.5	849.8	0.267	0.655	0.0409	0.0388	99.812	299	8.4	0.5	93	100	9.5

Test point: 25

Probe #	Date	Air Pres.	Air Temp.	Air Flow Rate	Fuel Flow Rate	f/a meas.	f/a Calc	Comb Efficiency	CO ppm	CO2 %	HC ppm	NO ppm	NOX ppm	O2 %
1	7/19/95	149.3	1200	0.6	1.215	0.0338	0.0368	99.792	149	7.9	2	480	720	9.9
2	7/19/95	150.3	1200	0.592	1.214	0.0342	0.0359	99.793	149	7.6	2	480	620	10.2
3	7/19/95	149.8	1200	0.599	1.25	0.0348	0.0373	99.838	90	8.1	2.2	480	640	9.9
4	7/19/95	149.4	1200	0.603	1.246	0.0344	0.0422	99.743	299	9.2	0.5	540	740	8.4

REPORT DOCUMENTATION PAGE

Form Approved
OMB No. 0704-0188

Public reporting burden for this collection of information is estimated to average 1 hour per response, including the time for reviewing instructions, searching existing data sources, gathering and maintaining the data needed, and completing and reviewing the collection of information. Send comments regarding this burden estimate or any other aspect of this collection of information, including suggestions for reducing this burden, to Washington Headquarters Services, Directorate for Information Operations and Reports, 1215 Jefferson Davis Highway, Suite 1204, Arlington, VA 22202-4302, and to the Office of Management and Budget, Paperwork Reduction Project (0704-0188), Washington, DC 20503.

1. AGENCY USE ONLY (*Leave blank*)

2. REPORT DATE
January 2005

3. REPORT TYPE AND DATES COVERED
Final Contractor Report

4. TITLE AND SUBTITLE
HSCT Sector Combustor Hardware Modifications for Improved Combustor Design

5. FUNDING NUMBERS
WBS–22–714–09–46
NAS3–26617

6. AUTHOR(S)
Stuart C. Greenfield, Paul V. Heberling, and George E. Moertle

7. PERFORMING ORGANIZATION NAME(S) AND ADDRESS(ES)
General Electric Aircraft Engines
Advanced Engineering Programs Department
One Neumann Way
Cincinnati, Ohio 45215–6301

8. PERFORMING ORGANIZATION REPORT NUMBER
E–14782

9. SPONSORING/MONITORING AGENCY NAME(S) AND ADDRESS(ES)
National Aeronautics and Space Administration
Washington, DC 20546–0001

10. SPONSORING/MONITORING AGENCY REPORT NUMBER
NASA CR—2005-213322

11. SUPPLEMENTARY NOTES
This research was originally published internally as HSR030 in January 1996. Responsible person, Diane Chapman, Ultra-Efficient Engine Technology Program Office, NASA Glenn Research Center, organization code PA, 216–433–2309.

12a. DISTRIBUTION/AVAILABILITY STATEMENT
Unclassified - Unlimited
Subject Categories: 01, 05, and 07 Distribution: Nonstandard
Available electronically at http://gltrs.grc.nasa.gov
This publication is available from the NASA Center for AeroSpace Information, 301–621–0390.

12b. DISTRIBUTION CODE

13. ABSTRACT ***(Maximum 200 words)***
An alternative to the stepped-dome design for the lean premixed prevaporized (LPP) combustor has been developed. The new design uses the same premixer types as the stepped-dome design: integrated mixer flameholder (IMFH) tubes and a cyclone swirler pilot. The IMFH fuel system has been taken to a new level of development. Although the IMFH fuel system design developed in this Task is not intended to be engine-like hardware, it does have certain characteristics of engine hardware, including separate fuel circuits for each of the fuel stages. The four main stage fuel circuits are integrated into a single system which can be withdrawn from the combustor as a unit. Additionally, two new types of liner cooling have been designed. The resulting lean blowout data was found to correlate well with the Lefebvre parameter. As expected, CO and unburned hydrocarbons emissions were shown to have an approximately linear relationship, even though some scatter was present in the data, and the CO versus flame temperature data showed the typical cupped shape. Finally, the NOx emissions data was shown to agree well with a previously developed correlation based on emissions data from Configuration 3 tests performed at GEAE. The design variations of the cyclone swirler pilot that were investigated in this study did not significantly change the NOx emissions from the baseline design (GEAE Configuration 3) at supersonic cruise conditions.

14. SUBJECT TERMS
High speed civil transport; Lean premixed prevaporized (LPP) combustor; Integrated mixer flameholder (IMFH) tubes; Cyclone swirler pilot; NOx emissions

15. NUMBER OF PAGES
75

16. PRICE CODE

17. SECURITY CLASSIFICATION OF REPORT	18. SECURITY CLASSIFICATION OF THIS PAGE	19. SECURITY CLASSIFICATION OF ABSTRACT	20. LIMITATION OF ABSTRACT
Unclassified	Unclassified	Unclassified	