NASA/CR—2005-213136

Large Engine Technology Program—Task 21—Rich Burn Liner for Near Term Experimental Evaluations

D.J. Hautman and F.C. Padget
United Technologies Research Center, East Hartford, Connecticut

D. Kwoka, K.S. Siskind, and R.P. Lohmann
Pratt & Whitney, West Palm Beach, Florida

January 2005

The NASA STI Program Office . . . in Profile

Since its founding, NASA has been dedicated to the advancement of aeronautics and space science. The NASA Scientific and Technical Information (STI) Program Office plays a key part in helping NASA maintain this important role.

The NASA STI Program Office is operated by Langley Research Center, the Lead Center for NASA's scientific and technical information. The NASA STI Program Office provides access to the NASA STI Database, the largest collection of aeronautical and space science STI in the world. The Program Office is also NASA's institutional mechanism for disseminating the results of its research and development activities. These results are published by NASA in the NASA STI Report Series, which includes the following report types:

- TECHNICAL PUBLICATION. Reports of completed research or a major significant phase of research that present the results of NASA programs and include extensive data or theoretical analysis. Includes compilations of significant scientific and technical data and information deemed to be of continuing reference value. NASA's counterpart of peer-reviewed formal professional papers but has less stringent limitations on manuscript length and extent of graphic presentations.

- TECHNICAL MEMORANDUM. Scientific and technical findings that are preliminary or of specialized interest, e.g., quick release reports, working papers, and bibliographies that contain minimal annotation. Does not contain extensive analysis.

- CONTRACTOR REPORT. Scientific and technical findings by NASA-sponsored contractors and grantees.

- CONFERENCE PUBLICATION. Collected papers from scientific and technical conferences, symposia, seminars, or other meetings sponsored or cosponsored by NASA.

- SPECIAL PUBLICATION. Scientific, technical, or historical information from NASA programs, projects, and missions, often concerned with subjects having substantial public interest.

- TECHNICAL TRANSLATION. English-language translations of foreign scientific and technical material pertinent to NASA's mission.

Specialized services that complement the STI Program Office's diverse offerings include creating custom thesauri, building customized databases, organizing and publishing research results . . . even providing videos.

For more information about the NASA STI Program Office, see the following:

- Access the NASA STI Program Home Page at ***http://www.sti.nasa.gov***

- E-mail your question via the Internet to help@sti.nasa.gov

- Fax your question to the NASA Access Help Desk at 301–621–0134

- Telephone the NASA Access Help Desk at 301–621–0390

- Write to:
  NASA Access Help Desk
  NASA Center for AeroSpace Information
  7121 Standard Drive
  Hanover, MD 21076

NASA/CR—2005-213136

Large Engine Technology Program—Task 21—Rich Burn Liner for Near Term Experimental Evaluations

D.J. Hautman and F.C. Padget
United Technologies Research Center, East Hartford, Connecticut

D. Kwoka, K.S. Siskind, and R.P. Lohmann
Pratt & Whitney, West Palm Beach, Florida

Prepared under Contract NAS3–26618

National Aeronautics and
Space Administration

Glenn Research Center

January 2005

Acknowledgments

The NASA Project Manager for this task was Mr. Robert Tacina, NASA Glenn Research Center, Dr. Robert P. Lohmann was the Pratt & Whitney Program Manager. Mr. David Kwoka and Mr. Kenneth Siskind were responsible for the design, analysis, and procurement of the experimental liners at Pratt & Whitney while Dr. Donald Hautman and Mr. Frederick Padget were principal investigators for the experimental assessment of the liners at United Technologies Research Center.

Document History

This research was originally published internally as HSR061 in February 1999.

Trade names or manufacturers' names are used in this report for identification only. This usage does not constitute an official endorsement, either expressed or implied, by the National Aeronautics and Space Administration.

Available from

NASA Center for Aerospace Information
7121 Standard Drive
Hanover, MD 21076

National Technical Information Service
5285 Port Royal Road
Springfield, VA 22100

Available electronically at http://gltrs.grc.nasa.gov

FOREWORD

This report documents the activities conducted under Subtasks A through E of Task 21 of the NASA Large Engine Technology program under Contract NAS3-26618 to assess liner technology and constructions for the rich zone of a Rich-Quench-Lean combustor. The specific intent was to identify approaches employing currently available materials and fabrication processes that could be used in near term combustor rig applications. While limited durability consistent with shorter duration rig programs was acceptable, the liner constructions and cooling air utilization could not compromise the stringent emissions, performance and operability goals that these experimental combustors would have to achieve.

The NASA Project Manager for this task was Mr. Robert Tacina of NASA Lewis Research Center, Cleveland, Ohio. Dr. Robert P. Lohmann was the Pratt & Whitney Program Manager. Mr. David Kwoka and Mr. Kenneth Siskind were responsible for the design, analysis and procurement of the experimental liners at Pratt & Whitney while Dr. Donald Hautman and Mr. Frederick Padget were principal investigators for the experimental assessment of the liners at United Technologies Research Center.

TABLE OF CONTENTS

I SUMMARY 1

II INTRODUCTION 2

III COMBUSTOR LINER DEFINITION, DESIGN & ANALYSIS 5
- Design Constraints 5
- Metallic Liner with External Cooling, Design & Analysis 7
- Ceramic Liner, Design & Analysis 8
- Metallic Liner with Internal Cooling, Design 10

IV EXPERIMENTAL APPARATUS 12
- Modular RQL Combustor Rig 12
- RQL Combustor Test Facility 13
- Combustor Rig Hardware 13
- Instrumentation 14

V TEST RESULTS 16
- Hastelloy-X Liner with Non-Turbulator Jacket 16
- Hastelloy-X Liner with Jacket having Turbulators 18
- Directionally Solidified Liner with Integral Trip Strips 20
- Liner Heat Transfer Tests 20
- Durability Test 21
- Emissions Measurements 22

VI CONCLUSIONS 24

SECTION I SUMMARY

The objective of the task reported herein, which was conducted as Task 21 of the NASA sponsored Large Engine Technology program (Contract NAS3-26618), was to define and evaluate a near-term rich-zone liner construction based on currently available materials and fabrication processes for a Rich-Quench-Lean combustor. This liner must be capable of operation at the temperatures and pressures of simulated HSCT flight conditions but only needs sufficient durability for limited duration testing in combustor rigs and demonstrator engines in the near future. This must be achieved at realistic cooling airflow rates since the approach must not compromise the emissions, performance, and operability of the test combustors, relative to the product engine goals.

The effort was initiated with an analytical screening of three different liner construction concepts. These included a full cylinder metallic liner and one with multiple segments of monolithic ceramic, both of which incorporated convective cooling on the external surface using combustor airflow that bypassed the rich zone. The third approach was a metallic platelet construction with internal convective cooling. The platelet construction was eliminated from consideration during the screening process because of difficulty executing the concept within the air utilization constraints of the Rich-Quench-Lean combustor concept. The monolithic ceramic segment approach was pursued through fabrication of liner panels for test but was discontinued when the inability to maintain critical tolerances in combination with sealing difficulties between segment panels precluded a practical solution. The full cylinder metallic approach was found more favorable and test liners were fabricated using both a rolled sheet construction and by casting a high strength directionally solidified alloy.

Three metal liner/jacket combinations were tested in a modified version of an existing Rich- Quench-Lean combustor rig to obtain data for heat transfer model refinement and durability verification. A rolled sheet Hastelloy-X liner was tested with a plain jacket and a jacket having machined turbulators. A directionally solidified, cast metal liner with integral trip strips was tested with a plain jacket. For the rolled sheet Hastelloy-X Liner, temperatures were strongly affected by the rich-zone equivalence ratio and quench-air temperature, but only weakly affected by quench-airflow rate. Liner temperatures ranging from 1600°F to 1900°F were measured at cruise operating conditions during this testing. The pressure loss was 5 times larger with the jacket having turbulators but the resultant turbulence near the outside of the cooling air annulus had no substantial effect on the liner temperatures. When the directionally solidified, cast metal liner with integral trip strips was tested with a plain jacket the pressure loss was nominally 2.5 times higher than the Hastelloy-X liner with a plain jacket. However, in this case the integral trip strips did result in lower liner temperatures. Liner temperatures ranging from 1500°F to 1780°F were measured at cruise operating conditions during this testing. The directionally solidified liner with the plain jacket was also subjected to ten hours of durability testing at simulated HSCT supersonic cruise operating conditions. The liner was in excellent condition after this testing.

SECTION II. INTRODUCTION

Environmental impacts will dictate substantial constraints on the High Speed Civil Transport (HSCT) aircraft that will in turn establish its economic viability. Emissions output, and in particular the oxides of nitrogen generated during supersonic flight in the stratosphere, is especially significant because of their potential for participating in the destruction of ozone at these high altitudes. These concerns lead to the need to severely constrain the output of NO_x from the engines for this aircraft. Comprehensive studies of the dynamics of the upper atmosphere as it influences ozone concentrations are being conducted under the NASA sponsored Atmospheric Effects of Stratospheric Aircraft program (Ref. 1). The initial results from these studies have led to a goal of an emissions index of 5 gm. of NO_x /kg fuel at the supersonic cruise flight condition. Since this level is five to eight times lower than that achievable with current engine combustor technology only the most aggressive and advanced low emissions technology can be considered for the powerplants for this aircraft. Pratt & Whitney and General Electric are studying two combustor concepts in the NASA-sponsored High Speed Research program to define a burner that achieves this NO_x emissions goal at the supersonic cruise operating condition. Such a burner must also preserve high efficiency, broad operability, and low emissions at all other operating conditions as well as being durable and economically competitive.

The effort at Pratt & Whitney has been concentrated on the Rich-Quench-Lean (RQL) combustor. This combustor concept incorporates separated zones of combustion to preserve combustor stability while achieving emission control. The combustion process is initiated in a fuel-rich combustion zone and completed in a fuel-lean combustion zone, with a rapid transition between them. All of the fuel is introduced in the rich zone but with only a fraction of the air required for complete combustion. The rich combustion process provides the combustor stability and, being deficient in oxygen, completes a significant portion of the overall energy release without forming oxides of nitrogen. The combustion products proceed to a quench section where the remainder of the combustion air is introduced in a rapid, intense mixing process. The downstream lean zone is used to complete CO and soot burn-off. Low NO_x emissions will be achieved only if the quench or transition process between the zones is sufficiently vigorous to avoid significant flow residence time near stoichiometric mixture proportions. Subscale testing of a single injector or modular version of the RQL combustor at the HSCT engine supersonic cruise operating conditions has demonstrated the low emissions potential of this concept and generated a significant design data base. This effort has been conducted at United Technologies Research Center (UTRC) and was performed as Task 3, HSR Low NO_x Combustor, of NASA Lewis Research Center contract NAS3-25952, Aero-Propulsion Technology Research Program, with Pratt & Whitney of the United Technologies Corporation (Ref. 2).

The rich combustor approach presents a unique liner design requirement and opportunity for the RQL combustor concept. Since a fuel-rich environment must be maintained, no cooling airflow may pass through the liner. As a consequence, the liner is directly exposed to the hot, fuel-rich combustion gases without the usual protective presence of a cooling air film. However, sixty percent or more of the combustor airflow is being diverted past the rich zone to the quench section of the combustor and provides a means for convective cooling of the external surface of the rich zone liner as it flows downstream. At supersonic cruise the temperature of this cooling air is high - about 1200°F - and in

present a challenging thermal environment. Long life requirements for the components of this engine have led to consideration of more aggressive materials-such as ceramic matrix composites- for combustor liners. The potential of the advanced materials and the assessment of their capabilities relative to currently available liner metals are being addressed under the NASA sponsored Enabling Propulsion Materials (EPM) program under contract NAS3-26385. However, this program is directed at the longer range definition of liner constructions and materials consistent with the product engine application and there are more immediate needs for support of current Rich-Quench-Lean combustor development efforts. The objective of the task reported herein, which was conducted as Task 21 of the NASA sponsored Large Engine Technology program (Contract NAS3-26618), was to define and evaluate a near-term rich-zone liner construction based on currently available materials and fabrication processes. This liner must be capable of operation at the temperatures and pressures of simulated HSCT flight conditions but only needs sufficient durability for limited duration testing in combustor rigs and demonstrator engines in the near future. This must be achieved at realistic cooling airflow rates since the approach must not compromise the emissions, performance, and operability of the test combustors, relative to the product engine goals.

The overall objective of this study was to define a non-effusive cooled liner for the rich zone of a RQL combustor using current or near-term materials and fabrication processes that would be capable of meeting anticipated combustor rig and demo engine durability requirements. Specific objectives were to:

- Analytically screen three liner concepts. These included a metal construction, an approach using monolithic, silicon nitride ceramic and metal platelet concept.

- Perform combustion tests at supersonic cruise conditions and at variations from them to refine the thermal analytical models on selected configurations and candidate constructions.

- Perform a ten-hour durability combustion test at supersonic cruise conditions on the best liner configuration.

The activities performed in this program were consistent with the above objectives.

A modified version of the existing high inlet air temperature Rich-Quench-Lean combustor rig used in the concept demonstration and design base data acquisition activities of Ref. 2 was the test vehicle for the thermal assessment and long term durability validation portions of the task. This facility was located in Cell 1E of the Jet Burner Test Stand at United Technologies Research Center. The facility permitted combustion testing at combustor pressures up to 200 psia and combustor inlet air temperatures up to 1400°F. Airflow control features exist to alter the airflow rates delivered to the rich-zone combustor and to the quench mixer. The combustor rig contained a modular, 5-in dia RQL combustor which allowed variations of either the rich-zone or lean-zone combustor length, the quench mixer configuration, or the fuel nozzle design. During the course of the task heat transfer data was obtained from three metal liner/jacket combinations. Durability testing, consisting of ten hours at supersonic cruise conditions, was performed with one metal liner/jacket combination.

This report details the activities and results of the UTRC evaluation of near-term rich-zone liner concepts. Section I provides a Program Summary, while Section II includes introductory and background information. Section III provides details of the liner definition, their design and supporting analyses. Section IV provides a description of the RQL combustor rig and test facility and the test hardware. The results of the combustion test program are presented in Section V. Conclusions are presented in Section VI.

SECTION III COMBUSTOR LINER DEFINITION, DESIGN & ANALYSIS

The technical effort on this task was initiated with a review of candidate liner constructions that might be incorporated in the rich zone liner of future combustor rigs in the High Speed Research programs. This initial review disclosed three potential configurations:

1. A metallic liner with ceramic thermal barrier coating on the gas side. This configuration would be a one-piece hoop or cylindrical construction and would be convectively cooled on the outer surface.

2. A monolithic ceramic liner with constrained axial segment construction. The segments would likely be constructed of silicon nitride and be convectively cooled on the external surface.

3. A cylindrical metallic liner construct with internal convective air cooling. This configuration is based on the "platelet" concept defined by Aerojet Division of Gencorp and is a candidate for evaluation in a study being conducted under the Enabling Propulsion Materials Program (Contract NAS3-26385) (Ref. 3).

The remainder of this section describes the design constraints on these candidate liners, their design and thermal-structural analyses and the fabrication of the selected concepts.

Design Constraints

The thermal design point of the candidate liner configurations is the rich zone environment of the Rich-Quench-Lean combustor at the supersonic cruise condition of the High Speed Civil Transport engine. These conditions defining this environment are listed in Table III-1. The gas-side thermal boundary condition is the gas temperature associated with complete combustion of the specified rich bulk fuel-air mixture with allowances for locally higher temperatures due to mixture non-uniformity. More severe pressure and gas temperature conditions may be encountered at lower altitude and/or subsonic flight conditions where the bulk mixture strength is closer to stoichiometric. However, at these conditions the combustor inlet temperature- the sink temperature for cooling the liner- is lower and the liner material temperatures may not be as high. Supersonic cruise is also the long exposure time flight condition which makes it the most critical for material deterioration or depletion considerations.

Table III-1 RQL Supersonic Cruise Test Condition

Parameter	Symbol	Units	Value
Combustor Inlet Air Pressure	P3	psia	150
Combustor Inlet Air Temperature	T3	°F	1200
Combustor Overall Fuel-Air Ratio	F/A-OA	---	0.030
Combustor Reference Velocity (Based on WAT, P3, T3 & DL)	UREF	ft/s	90
Rich Combustor Equivalence Ratio	ØR	---	1.8

In defining the cooling systems for the candidate liners, the airflow utilization aspects and aerothermal objectives of the Rich-Quench-Lean combustor must be recognized. The prohibition of effusive cooling of the hot side surfaces of the rich zone must be recognized to avoid compromising the rich chemistry in this zone. The need to bypass about 75 percent of the total combustor airflow around the rich zone with the bulk of this flow being introduced into the combustor immediately downstream of the rich zone creates a strong incentive to use this flow for external convective cooling of the rich zone liner. However, excessive pressure loss in this cooling system would also have to be recognized as a potential performance penalty.

It was the intent of this task to use the existing cylindrical Rich-Quench-Lean combustor rig as the test vehicle for this program. This rig is shown on Figures III-1 & IV-1 and dictated that the experimental versions of the candidate liner constructions be cylindrical specimens nominally 5 inches in diameter converging to a 3-inch diameter discharge. Figure III-1 shows the design approach in modifying the rig to incorporate the test liners. With reference to Figure IV-1A, the rig construction upstream of and including the bulkhead of the rich zone was retained. Likewise the quench section and downstream components of the lean zone were retained. The cylindrical spool defining the rich zone and the conical convergence immediately downstream were removed and replaced with a new spool (Figure III-1) that bridged the same gap. The inlet air pipe on the quench section was capped and the quench air piping relocated upstream about six inches to feed a plenum outboard of the outer liner. This plenum was divided into two regions by the liner jacket (Item 2). A spring seal (Item 5) separates the plenum into an upstream and downstream compartment and the rerouted quench air now flows into the upstream plenum, through holes in the upstream end of the liner jacket into the liner cooling air channel (Item 1). This flow discharges in to the aft plenum (Item 3) from which it passes through newly drilled holes in the front wall of the quench section to enter the combustor gaspath through the quench air orifices from the manifold (Item 4).

Metallic Liner with External Cooling, Design & Analysis

Figure III-2 shows an expanded cross section view of the cylindrical combustor rig of Figure III-1 with the one-piece metallic liner installed in the rich zone. The liner and its jacket, which acts as a flow guide to route cooling air behind the liner and into the quench air manifold, are both front mounted off the rich zone bulkhead. Figure III-3 shows an exploded view of the liner-jacket assembly. Eight radial tabs on the liner and another set of radial splines on the jacket flange provide concentric alignment and retention while accommodating radial thermal expansion differentials. The liner seals on the upstream end of the quench manifold section through sliding contact on a chamfered corner.

Figure III-2 indicates that the radial gap between the rich zone liner and its surrounding jacket is nominally 0.160 inches. This is about 25 percent narrower than the gap that would be required to achieve the previously established Mach Number of 0.20 thought to be necessary for adequate cooling of a Hastelloy-X liner at the supersonic cruise condition of Table III-1. However, the coolant channel was deliberately undersized to allow more flexibility in conducting parametric variations of operating conditions during test. In so doing, a higher than nominal pressure drop was to be expected in the liner cooling channel. Had the channel been sized larger, it would have been impossible to achieve higher cooling air Mach numbers during excursions because of air flow limitations of the facility.

Two different materials were considered for the baseline metallic liner, Hastelloy-X and MA956. The latter has the advantage of higher strength at elevated temperature, but was considered more difficult to fabricate. Eventually Hastelloy-X was selected as the baseline metallic liner and a substantially more aggressive material approach - directionally solidified, cast PWA1422 - was employed in a second metallic liner. PWA 1422 (common designation: MAR-M-200 + Hf Directionally Solidified) is a cast, directionally solidified, columnar grained, heat treatable nickel-base alloy, with primary application in turbine blades and vanes, which offers a combination of good high temperature strength and fair oxidation resistance. Rupture and creep strength in the grain growth direction exceed that of IN-100 and B-1900 and are inferior to single crystal. Elastic modulus in direction of grain growth is lower than conventionally cast nickel-base alloys. This liner was cast in-house in a rapid fabrication process well suited to limited quantity experimental hardware and utilized a stereo lithography model to rapidly produce the ceramic casting shell. This metallic liner has improved temperature and creep rupture strength relative to the spun Hastelloy-X liner material. A plasma sprayed zirconia thermal barrier coating was applied to the gas side of both of these liners.

The initial, baseline spun Hastelloy-X sheet metal liner had a smooth external surface as did the machined jacket that formed the outer wall of the coolant annulus. As part of the investigation, the influence of turbulence generators that would enhance convective heat transfer from the liner was studied in two configurational variations.

In the first variation, an additional outer jacket was fabricated for use with the smooth Hastelloy-X liner. This jacket had turbulators that protruded into the cooling air annulus. The nominal jacket diameter was consistent with the annulus height of 0.160 inches but the turbulators, which were ribs with a square cross section 0.050 by 0.050 inches, reduced it locally to 0.110 inches. The ribs were machined in the transverse direction and were interrupted every fifteen degrees by a narrow gap. The axial pitch between ribs was 0.200 inches. These turbulence generators functioned in the flow near the outer wall of the

annulus as opposed to near the liner surface but the narrow gap of the annulus was expected to produce an influence at the liner surface as well.

The second variation of turbulence generators was trip strips cast directly into the coolant surface of the liner. These were installed on the directionally cast liner and, as shown on Figure III-5, were arranged in a repeating herringbone array. The trip strips were nominally 0.030 inches high and protruded into the 0.160-inch high cooling air annulus to generate additional turbulence immediately adjacent to the liner surface.

Thermal and structural analyses have been conducted on the liners using material properties for both metals. Heat transfer boundary conditions included gaseous radiation consistent with supersonic cruise conditions listed in Table III-1. Rich zone flame temperatures are estimated to be approximately 3400°F with a gaseous emissivity of approximately 0.7. Rich zone convective heating was also included with convective coefficients in the range of 20-50 BTU/hr ft^2 °F. Convective cooling was also included and was consistent with a Mach number of 0.20, resulting in coolant side convective coefficients of approximately 250 BTU/hr ft^2 °F. Based on these analyses and experience with the application and retention of thermal barrier coatings, it was concluded that a coating thickness of about 0.020 inches, including bond coats, was optimal with either metal. Figure III-4 shows the results of the thermal and structural analysis of the metallic liner at the supersonic cruise condition. The analysis was conducted with the MARC program (Ref. 4) and is based on the use of Hastelloy-X properties and coolant Mach numbers consistent with a nominal cylindrical combustor design. Thermal analyses of a representative metallic liner indicate that reasonable liner temperature levels; i.e.1780 to 1845°F with Hastelloy-X; would be maintained at the supersonic cruise condition of Table III-1 with cooling air Mach numbers of about 0.2 over the external surface. The results indicate the temperature distribution in the liner is quite uniform with through thickness temperature differentials of about 280°F and 65°F across the thermal barrier coating and the 0.060-inch thick metal wall respectively. The cooling influence of the extended mount tabs is evident and a very localized peak Von Mises stress of about 22 ksi is encountered near the base of the tabs.

Ceramic Liner, Design & Analysis

While ceramic composites offer potential for use in combustor liners and are a major thrust in the NASA Enabling Propulsion Materials program, their maturation is seen as a longer term effort that is not consistent with the immediate needs of the RQL experimental efforts. However, monolithic ceramics including primarily silicon nitride and silicon carbide have high temperature capabilities and, while brittle, could be considered as a workable near term liner material. Investigation of the available manufacturing capabilities focused the interest on silicon nitride and a candidate construction was defined based on its use.

Figure III-6 shows a cross section of the rich and quench zones of the rig incorporating the most attractive design approach identified in this study. The ceramic liner is segmented axially into a "barrel stave" construction. The sixteen segments replicate the 5-inch diameter cylindrical part of the rich zone gas path and the convergence at the entrance to the quench section of the cylindrical rig. The segment is cantilever mounted at the upstream end adjacent to the front bulkhead of the rich zone. A clipped pin engaged in a keyhole slot, in a sliding retaining ring, provides downstream support of the segment and

vibrational damping while accommodating axial thermal growth. The routing of cooling airflow on the back surface of the segment is essentially the same as with the metallic liner. The air is admitted to a plenum outside the liner where holes in the internal support wall (jacket) distribute the flow in the circumferential direction. A compliant thermal insulating seal at the edge of each panel prevents leakage of the cooling air into the gaspath, directing it to flow aft and discharge through the holes in the front wall of one of the existing, water-cooled quench sections into the internal manifold of the quench section. Section C-C of Figure III-6 shows the compliant seals mounted on ribs on the internal jacket wall. These ribs extend the length of the segments and prevent leakage between the segments. The liner segments seal on the upstream end of the quench manifold section through butting contact on the upstream surface of the quench manifold. Thermal growth and temperature differences between the ceramic segments and the metal jacket maintain this contact at supersonic cruise conditions without inducing significant thermal stresses in the ceramic segment.

Figure III-7 shows an exploded isometric view of the silicon nitride liner panels and jacket assembly. Similar to the metal liner/jacket combination, after the air enters the housing it is directed to the annulus between the jacket and the liner by openings in the jacket. A gasket (shown in Figure III-6) is used to prevent air from entering the gaspath at the upstream end of the rich zone between the jacket and rich zone bulkhead.

This design approach for an axial ceramic segment liner also appears compatible with a full annular combustor configuration. The segments are initially envisioned as being nominally about one inch wide with a hundred or more segments being used in an annular combustor liner. With sixteen segments in the cylindrical rig there is no need to incorporate transverse curvature in the segments, a feature that was also expected to expedite fabrication of these components.

Figure III-8A shows the configuration of a segment of the liner for the cylindrical rig based on the current state of analysis. The tab at the upstream end, which attaches to the front bulkhead of the combustor, is blended to the panel proper with a generous radius to minimize stress levels. This figure also shows the grid system used in thermal and structural analysis of this segment on the MARC computer program (Ref. 4).

Figure III-8B shows the computed temperature distribution in the segment at simulated supersonic cruise conditions in the cylindrical rig while Figure III-8C shows the corresponding principle stress contours. These distributions are based on silicone nitride material properties and similar heat transfer boundary conditions as those previously described for the metallic liner. The temperature in the bulk of the segment is very uniform with a through thickness differential of about 100°F. Locally depressed temperatures occur near the upstream flange and the retention tab and, as shown in Figure III-8C, are the only sources of significant stresses in the part. The maximum principle stress, the stress component considered to characterize failure in flaw dependent materials, of 22 ksi occurs very locally on the downstream fillet of the retention tab. At this location the material experiences the combined influence of the local temperature gradient and the bending produced by the pressure load on the inward canted section of the segment extending into the convergence of the gaspath.

The segment design of Figures III-6 and III-7 was released for procurement. However, manufacturing of the cooling air jacket became a concern due to the tight tolerances and complex shape of the cooling air

channel sealing rib design. As designed, maintaining tight tolerances on the ribs that seal between the axial ceramic segments as the ribs follow along the cylindrical/conical contour would have incurred extreme costs and would have been difficult to manufacture at the small diameter (3-5 inches) of this rig. Modifications to the geometry simplified the manufacturing process, allowing tight tolerancing for the sealing surfaces. The shape of the rich zone for this liner-cooling concept was changed from "cylindrical to conical" to simple "conical". As shown on Figure III-9, the liner starts at the 5 inch diameter at the bulkhead and converges to a 3 in. diameter at the entrance to the quench zone. This shape allowed the cooling pockets/sealing ribs to be wire electrodischarge machined (EDM) into the stock of the cooling jacket, a relatively inexpensive process that could maintain the tolerances required. While it was not certain that the conical gaspath would be acceptable for the rich zone from the point of view of flame stabilization and other aerothermal performance considerations, a decision was made to proceed with fabrication of the conical segment geometry on the basis that performance compromises were not likely to be encountered during the limited thermal tests of this task.

Additional difficulties were encountered during the fabrication of the silicon nitride liner segments. The segments were cast and then hot isostatic pressed (HIPed). HIPing was required to consolidate the segments because silicon nitride does not sinter at elevated temperatures. While the HIPing was generally successful, many of the panels exhibited more bowing than had been anticipated. An alternate method of HIPing was tried for a second batch of panels yielding parts with less distortion. The panels were subsequently sent to a machining vendor for grinding to final dimensions. On return, more than half the liner segments still had deviations that ultimately resulted in their rejection. After several cycles through the HIPing and finish machining processes, contributing to a timing of over a year from initial design to delivery of the partially rejected set of segments, the pursuit of the monolithic ceramic liner and its experimental evaluation under this program was dropped. This left the conclusion that, while monolithic ceramic liner segments might be compatible with long range combustor design objectives, they were not sufficiently flexible nor was their design methodology mature enough for near term application to rapidly changing experimental combustors.

Metallic Liner with Internal Cooling, Design

The third liner-cooling concept under study is an internally cooled platelet material concept developed by GenCorp Aerojet. The approach uses multiple small parallel internal channels to convey cooling air inside the wall of an otherwise sheet metal structure. Figure III-10 shows a tentative definition of a rich zone liner constructed according to this approach. For simplicity of fabrication, the liner is shown as conical as in the compromised ceramic segment design rather than the preferred cylindrical-conic contour. The wall has the cooling air channels extending in the circumferential direction and these carry a relatively small part of the total quench air around the full circumference of the liner after which it is collected in a wall mounted manifold as shown schematically in the detail on Figure III-10. According to conceptual studies by Aerojet, the liner fabrication process utilizes a technique of photo-etching the internal cooling passages into the layers of the metal platelets. These platelets are then bonded flat and rolled and electron beam (EB) welded into the required conical shape. Finally, the appropriate manifolds (for proper cooling air distribution) and attachment flanges are brazed or welded onto the conical liner.

While not actively analyzed under this task, a feasibility study conducted under the Enabling Propulsion Materials contract (NAS3-23685) by Aerojet (Ref. 3) shows that a rich zone liner incorporating this metallic platelet structure using a material such as INCO 600 with a nominal thermal barrier coating would operate at a maximum metal temperature of about 1835°F at supersonic cruise conditions. Following this analysis, and also under the Enabling Propulsion Materials program, Aerojet proceeded to design and fabricate a conical liner of this type. The liner was sized consistent with but never adapted to or tested in the cylindrical Rich-Quench-Lean combustor rig.

The platelet construction and its cooling concept was of interest and, like the ceramic segment approach, was thought to have potential long term application to combustor liners. However, a serious issue with the internal cooling approach is the diversion of a portion of the available air through a high-pressure loss cooling system (approximately 3% loss) and the subsequent utilization of this air. The application must provide an acceptable sink for this air without incurring performance penalties. In addition, the concern in the present task is also one of applying this cooling technology to experimental hardware for a rapidly evolving combustor concept. In such an effort there is insufficient time or incentive to redesign an unconventional cooling system to meet shifting thermal loads and aerothermal constraints. Consequently, the internally cooled metallic liner concept was not pursued further under this task.

SECTION IV EXPERIMENTAL APPARATUS

The Rich-Quench-Lean (RQL) combustor rig used for the test activities under this task was a modified version of the single nozzle modular combustor rig used in the fundamental validation and design base data acquisition effort described in Ref. 2. The rig incorporated independent control of the airflow to the rich and quench zones of the combustor. The quench airstream was directed into the gaspath from a manifold around the quench section of the rig but for the purpose of the current test this air was rerouted to provide convective cooling on the outside of the rich zone liner before entering this manifold. This section of the report describes the RQL combustor rig, the near-term rich-zone liners evaluated and the facility used to support it.

Modular RQL Combustor Rig

The modular RQL combustor rig, as it was defined and constructed for the effort of Ref. 2, is shown in Figure IV-1A. The rich combustion zone consisted of a cylindrical length section followed by a conical convergent section to the quench entrance; these two sections were individual modules of the RQL combustor. Cylindrical spools of varying lengths were available to achieve different residence times in the rich zone. The convergent section was 1.6-inch long, transitioning from the 5-inch diameter combustor to the 3-inch diameter quench section at an included angle of 64 degrees. The lean zone consisted of a divergent section at the quench exit followed by a separate cylindrical section. The 3.2-inch long divergent section transitioned from the 3-inch diameter quench to the 5-inch diameter cylindrical section at an included angle of 34 degrees. Cylindrical spools of various lengths were also available to achieve alternative lean-zone lengths. All of these sections incorporated a double wall construction with an internal water jacket. The 8-inch nominal pipe size spools contained a 1.25-inch thick ceramic liner to provide thermal insulation and achieve the gaspath diameters mentioned above. The insulating liners were cast in place in the spools from Plibrico Plicast 40, a commercially available ceramic consisting of mostly alumina. This material was selected because of its favorable thermal shock properties and its ability to withstand combustor temperatures up to 3400°F.

Four candidate quench zone configurations, having different numbers and sizes of quench air orifices, were evaluated in the Ref. 2 program and a twelve circular-hole quench configuration was used for these tests. The quench airflow was injected into the gaspath through twelve, 0.500-inch diameter, equally spaced, circular orifices. The quench section length and inner diameter was 3.375-inch and 3-inch, respectively, and the axial plane of the hole centerlines was equidistant from the quench entrance and exit. The geometrical area of the twelve quench orifices was 2.356 in^2; the web between orifices was 0.29-inch.

The twelve-hole quench section design (shown in Figure IV-1AB) originally had one air inlet and was fabricated from 316SS and is water-cooled. The design includes two, 0.100-inch high annular water cooling passages located in a 0.750-inch thick wall that forms the quench-jet metal cylinder. Each cooling annulus is 1.100-inch wide and is located to provide a 0.750-inch wide uncoolded band at the center of the section for the quench jet orifices. Water was supplied at a flowrate of 3 GPM to each cooling passage through flexible lines that passed across the quench manifold and out of the housing. Heat loss from the combustion gas in the quench zone to the water cooled surfaces is minimized with the

use of a 0.030-inch thick, flame-sprayed coating of zirconia oxide. This quench section was modified for this task to allow spent rich zone liner cooling airflow to enter the quench manifold through twelve 0.828-inch diameter orifices in the side of the quench section. The original inlet air pipe on the quench section was capped-off since the quench air would now be delivered to the rich zone housing to cool the rich zone liner.

A Delavan Model 32740-3 Swirl-Air fuel injector was used for all combustion tests. The Swirl-Air nozzle is an internal mix, air-assist nozzle. The air-assist feature permitted control of the fuel atomization process independent of the test condition. The assist airflow was regulated and metered by a venturi to maintain a nozzle fuel-to-air flowrate ratio of about unity. This produced an included fuel spray angle of about 100 degrees. This nozzle was mounted in the center of an annular, axial-flow swirler. The effective airflow area of the nozzle-swirler assembly was 1.0 in^2.

RQL Combustor Test Facility

The single nozzle modular RQL combustor test rig was installed in Cell 1E of the Jet Burner Test Stand at United Technologies Research Center. This combustor facility included a high-temperature airflow distribution and control system, the modular RQL combustor, and an exhaust system. The total combustor airflow was supplied to the test facility by continuous-flow compressors. Combustor inlet air temperatures up to 1300°F were achieved with multiple, non-vitiated heating systems. Two direct-contact, electrical resistance heaters were plumbed in series to obtain a 1300°F inlet temperature at 200 psia. The airflow exiting the second heater was divided into the rich-zone combustor airflow and quench airflow.

A water-cooled instrumentation section containing six emissions sampling probes was located at the exit of the lean zone of the RQL combustor. Downstream of the instrumentation section, the combustor exhaust passed through a diffuser and transition section upstream of the combustor back-pressure control valve. The transition section diverted the flow through two 90-deg turns prior to encountering high-pressure water sprays to cool the flow before entering the back-pressure valve. A window was located in the transition section along the combustor centerline to permit observation of the flame.

Further details on the initial construction of the single nozzle, modular RQL combustor rig, its baseline instrumentation and operation are available from Ref. 2.

Combustor Rig Hardware

For the purposes of the current program the single module RQL combustor rig was modified to incorporate the candidate rich zone liners and to reroute the airflow to the quench manifold to pass over the external surface of the rich zone liner for convective cooling. This required replacing the cylindrical and convergent spools of the rich zone and modification of the quench section to accept the redirected airflow. The new rich zone liner assembly and the modified quench piece were shown on Figure III-1 and consists of the rich-zone liner under investigation, a jacket which controls the cooling air velocity over the liner, and the external housing piece. Details about the liner and jacket designs as they influence the liner external surface thermal boundary conditions were discussed in Section III. Figure IV-2 is a photograph showing the components of the rich zone section in exploded array. The existing

quench section was modified to allow the quench air, which is cooling the liner, to enter the internal manifold through the upstream face rather than the radially extending inlet pipe used in the prior program. Twelve-0.828 inch holes were drilled in the face of the quench section for this purpose.

Three different rich zone liner concepts were considered for evaluation in this program: metal, monolithic silicon nitride ceramic, and an internally cooled metal platelet liner. Only three variations of the metal liner were tested in the RQL combustor rig as part of this program. Two metal liners, one fabricated by spinning Hastelloy-X and the other a directionally solidified casting were tested during this program. Photographs of the instrumented Hastelloy-X liner and the directionally solidified liner are given in Figures IV-3 and IV-4, respectively. Both liners had a 0.02 to 0.03-inch thick zirconium oxide coating on the inside surface. The directionally solidified liner was cast from PWA 1422 material with integral trip strips, which are visible on Figure IV-4. The coolant-side of this liner was painted with temperature-sensitive paint (GT1). This paint is sensitive and provides readings in the 1600°F to 2000°F range.

Two jackets were used during the testing with the Hastelloy-X liner. One jacket had a smooth internal wall while the second had turbulators on that surface. Photographs of the jackets with and without turbulators are shown in Figure IV-5 and IV-6. As indicated in Section III, the turbulators were 0.050 inches high and 0.05 inches wide and were spaced 0.2 inches apart and were made by machining the grooves between each element into the wall. The objective of the turbulators was to increase the convective heat transfer coefficient on the coolant-side of the liner and therefore decrease metal temperatures.

Instrumentation

The baseline instrumentation on the combustor rig consisted of two venturis to measure the total airflow to the rig and to the rich zone, with the quench zone/liner cooling airflow being determined by the difference between the two. Fuel flow meters and another venturi measured the fuel flow and assist airflow to the fuel injector, respectively. Thermocouples were installed to measure air and fuel temperatures at each flow measurement site and in the rig air inlet plenums. Total pressure probes were also installed in the air plenums and static pressure taps in selected locations in the gaspath provided measurements of the pressure differentials across components of the combustor. As indicated above, six water-cooled, gas-sampling probes were installed in the lean zone of the combustor. Further details on the baseline instrumentation on the rig and its operation are available in Ref. 2.

Additional instrumentation specific to the objectives of the current program included Chromel-Alumel (Type K) thermocouples on the rich zone liners and jackets. Pressure taps were also installed on the jackets to provide pressure drop measurements along the cooling flow passages. The locations of this instrumentation are shown on Figure IV-7. The following thermocouples were installed:

- Twelve surface thermocouples on the coolant side of liner [Three axial locations (1, 2 and 3) at four circumferential positions (A, B, C and D)]
- Two thermocouples on jacket inner surface directly opposite two of the liner thermocouples
- Two thermocouples in the inlet air plenum between the jacket and the outer case

The following pressure taps were also installed:

- Six pressure taps along the coolant side of the jacket [Two axial locations (1 and 2), 2.813 inches apart, at three circumferential locations (A, B and C)]
- Three pressure taps in housing (one near coolant entrance)

Only nine liner thermocouples can be monitored during a test due to data acquisition limitations. Initially, the thermocouples designated by A, B, and C, in Figure IV-7, were monitored. The thermocouples designated by D are used for system safety interlocks and to replace any thermocouples failing during testing.

SECTION V TEST RESULTS

The experimental evaluation consisted of thermal testing of three different metallic combustor liner-jacket combinations through a total of 23 hours of combustor rig operation. These configurations consisted of the Hastelloy-X sheet liner in a smooth walled jacket and in a jacket with turbulators, and a cast, directionally solidified liner with integral trip strip turbulators in a smooth-walled jacket. In total the Hastelloy-X liner experienced four cold-to-hot-to-cold thermal cycles and eight hours of fired operation in the rig. Four of these hours were at cooling air temperatures in the 500 to 870°F range while the other four were at nominal inlet temperatures of 1200°F. The directionally solidified, cast liner also encountered four cold-to-hot-to-cold thermal cycles and was subjected to fifteen hours of thermal exposure in the rig. These consisted of two hours at cooling air inlet temperatures of 500 to 850°F and thirteen hours with cooling air temperatures of nominally 1200°F.

The combustor rig operating conditions were oriented toward the nominal supersonic cruise condition of a Rich-Quench-Lean combustor in an anticipated High Speed Civil Transport aircraft engine as identified in Table III-1. These conditions corresponded to a total rig airflow of 3.0 pps. Excursions of combustor inlet Mach number, dictated by variations in the liner cooling airflow jacket friction loss characteristics, were referenced to the combustor inlet Flow Parameter:

$$FP = \frac{Wab\sqrt{T3}}{P3}$$

When test conditions dictated operation at inlet temperatures lower than that of Table III-1 the inlet airflow was adjusted to maintain the Flow Parameter consistent with supersonic cruise. However, excessive pressure losses were encountered in the liner cooling air-quench system with some configurations and the reduction in Flow Parameter necessary for operation was produced by reducing the airflow while maintaining the appropriate inlet pressure and temperature.

Hastelloy-X Liner with non-Turbulator Jacket

The baseline liner/jacket combination was the sheet metal Hastelloy-X liner and the smooth wall jacket without turbulators. Liner temperature data were obtained as a function of quench-air temperature, rich-zone equivalence ratio, and quench-airflow rate. Figure V-1 shows the pressure drop across the 2.813 inch length, between pressure taps on the jacket of the liner air shroud, normalized by the static pressure at the upstream tap, as a function of the Flow Parameter squared (Flow Parameter based on the quench-airflow rate, the quench- manifold pressure and the quench-manifold air temperature). Data from several tests sequences conducted over a range of inlet air temperatures are presented. Operation at the rich zone to quench airflow split desired for producing the rich equivalence ratio per Table III-1 would have dictated a cooling air passage $FP^2$of about 0.35 or - according to this data - a pressure loss of about 3 percent. However, as shown in following data, adequate liner cooling could be maintained at substantially lower cooling air Mach number levels-implying lower pressure losses in the jacket. Also, as described in Section III, the cooling channel was undersized by 25% to allow parametric airflow variation tests, resulting in an increased nominal channel Mach number and cooling flow pressure loss.

The assessment of the liner heat transfer is addressed first by investigating the heat pickup in the cooling air system. Figures V-2, V-3, and V-4 are plots of the quench-manifold air temperature minus the liner inlet air temperature (coolant-temperature rise) versus cooling air inlet temperature, rich-zone equivalence ratio and quench-airflow rate respectively. The nominal baseline conditions for these plots were a total airflow rate of 3 pps, an airflow split of 24.3% to the rich zone, an inlet temperature of 1200°F, and a rich-zone equivalence ratio of 1.8. Analytic predictions as well as experimental measurements are shown in the figures. The results of all three figures are consistent with expectations both in level and in slope.

The effect of the quench-air temperature level on the coolant-temperature rise in Figure V-2 implies that less heat is absorbed by the cooling air as the temperature of this sink increases. The decrease in cooling air temperature from 1200°F to 800°F of this figure increases the temperature difference potential from the rich zone combustion products to this sink. With heat transfer from these products dominated by radiation, the nominally 50 percent increase in implied heat pickup with the 400°F change in the quench-air temperature appears realistic.

Likewise, the decrease in coolant-temperature rise accompanying an increase in rich-zone equivalence ratio on Figure V-3 is to be expected. As the rich-zone equivalence ratio increases at levels above unity, there is a decrease in temperature of the rich zone combustion products, and with it, a decrease in the potential for heat transfer into the liner. While a change in the rich zone equivalence ratio from 1.8 to 2.2 will increase the gaseous emissivity approximately 14%, the net radiation incident on the liner is decreased significantly due to the overwhelming impact that the temperature (raised to the fourth power) has on radiative heat loading. The flame temperature decrease of approximately 500°F, for the equivalence ratio change from 1.8 to 2.2, results in a 42% decrease in radiative loading which more than compensates for the 14% increase from the higher gaseous emissivity. With a net reduction in incident radiative heat loading caused by increased rich zone equivalence ratios, it follows that the available heat pick up and subsequent temperature rise of the convective cooling air would therefore decrease.

Finally, on Figure V-4, an increase in the quench-airflow rate results in a decrease in the coolant-temperature rise for a constant quench-air temperature and rich-zone equivalence ratio. For this particular test series parametric, only the quench airflow was varied while the rich zone airflow was held constant. This combination of airflow permutations naturally results in variations to the combustor inlet Flow Parameter. However, by conducting this test series in this fashion, the convection coolant heat transfer characteristics can be isolated for the purpose of model validation. The coolant-heat-transfer coefficient is expected to increase by 13% (from 307 BTU/hr ft^2 F to 347 BTU/hr ft^2 F) with a 17% increase in quench-flow rate (from 2.05 pps to 2.4 pps). Therefore, it would be expected that the coolant-temperature rise would decrease by 31%(i.e., the ratio of 17% to 13%). Examination of the data in Figure V-4 indicates that the coolant-temperature rise decreased by 35%.

Figures V-5, V-6 and V-7 are plots of individual liner temperature measurements versus quench-air temperature, rich-zone equivalence ratio and quench-airflow rate, respectively. Analytic predictions are also shown in these figures. The nominal baseline conditions for these plots were a total airflow rate of 3 pps, an airflow split of 24.3% to the rich zone, an inlet temperature of 1200°F, and a rich-zone equivalence ratio of 1.8 per Table III-I. Thermocouple locations are identified in accord with Figure IV-

7 in which the integer in the designator shows the axial location of the thermocouple and the final letter defines its circumferential position.

The measured liner temperatures shown in Figure V-5 demonstrate a strong dependence on quench air temperature that is to be expected given the heat generation and convection cooling mechanisms in the rich zone. A change in the quench air temperature affects both the rich zone gas temperature (for a given rich zone equivalence ratio) and the convective cooling temperature. A reduction in quench air temperature would reduce the radiative load on the rich zone liner by reducing the gas temperature and increase the effectiveness of the convective cooling, both resulting in significantly lower liner temperatures. Thus, it is to be expected that a change in quench air temperature should be a strong driver on resultant liner temperatures. It is difficult to discern trends in the axial variation of liner temperature, in view of the circumferential variations in liner temperature that are as large as +/- 100°F. There is slight evidence of the temperatures at Position 2, at the downstream end of the cylindrical section, being higher than those at the inlet end and those at the downstream end of the conical convergence in the liner (Position 3) being lower. However, these differences are decidedly second-order relative to the circumferential variations. The temperature levels are reasonably high but within the capabilities of the Hastelloy-X material; even at the 1200°F supersonic cruise inlet temperature; considering that the intended application is in relatively short duration combustor rig tests.

Similar dominance of the spread in liner temperatures by circumferential variations is also evident in the data obtained during parametric variations of the rich zone equivalence ratio in Figure V-6. Transverse direction spreads are more than +/- 100°F about the nominal temperature level and not even slight evidence is shown for consistent axial temperature variation. A trend of decreasing temperature with increasing rich zone equivalence ratio is evident and is to be expected in view of the rich zone gas temperature progressively decreasing at above stoichiometric proportions.

It is noteworthy that in both, the variation in cooling air temperature of Figure V-5 and the rich zone equivalence ratio of Figure V-6, the circumferential liner temperature variance (and axial variance) reduces as operating conditions approach those of higher liner temperature - i.e. 1200°F inlet air temperature on Figure V-5 and an equivalence ratio of 1.8 on Figure V-6. The cause is not recognized but it would appear the thermal boundary conditions are more three dimensional at the lighter thermal load conditions, resulting in greater variations in liner temperatures, with temperature variations as large as +/- 250°F (including axial and circumferential variations) in the most severe conditions where inlet temperatures are as low as 800°F.

The effect of cooling-airflow rate on the liner temperatures is given in Figure V-7. The liner temperatures reveal only a very slight dependence on the airflow rate and any trend of correlatability in the axial direction is lost in the circumferential thermocouple-to-thermocouple variations, which are on the order of +/- 150°F. Nonetheless, in the context of the cooling air flow rate effect on coolant temperature rise discussion relative to Figure V-4, a 13 percent increase in cooling flow rate associates with a reduction in nominal liner temperature of about 40°F as shown by the analytic predictions, which is roughly what is observed in the data plotted in Figure V-7.

Hastelloy-X Liner with Jacket having Turbulators

The Hastelloy-X sheet metal liner was tested with the jacket with the machined turbulators. Liner thermal data was obtained as a function of the rich-zone equivalence ratio, quench-air temperature, and quench-airflow rate. Paralleling Figure V-1 for the configuration with the smooth liner and outer jacket surfaces, Figure V-8 shows the pressure drop across the 2.813 inch length between pressure taps on the jacket of the liner air shroud normalized by the static pressure at the upstream tap as a function of the Flow Parameter squared (Flow Parameter based on the quench-airflow rate, the quench- manifold pressure and the quench-manifold air temperature). Data from the prior test of the smooth wall outer jacket are also presented. The pressure loss associated with the jacket with turbulators is significantly higher (i.e., 5 times higher) than the pressure loss associated with the jacket without turbulators. This increase in pressure loss is due to the decrease in nominal channel height, from 0.160 inches to 0.110 inches because of the inclusion of 0.050-inch high turbulators, and the resulting increase in velocity and associated pressure loss. Furthermore, the increased turbulence levels in the channel induced by the turbulators further exacerbate the pressure loss characteristics of the flow channel. Operation at the rich zone to quench airflow split desired for optimum cruise performance per Table III-1 would have dictated a cooling air passage FP^2 of about 0.35 or - according to this data - at a pressure loss of about 14 percent. However, as shown in the following data, adequate liner cooling could be maintained at substantially lower cooling airflow rates, which allowed lower pressure losses in the jacket. Liner temperature data acquired with this reduced air flow rate configuration were obtained at nominal or reference airflow of 75 percent of the supersonic cruise airflows (total rig airflow reduced from 3 pps to 2.25 pps). Allowing for the nominally 30 percent blockage of the cooling air channel by the turbulators (0.050-inch high turbulators in a 0.160-inch nominal channel height), this condition was approximately the same as operating the liner cooling system at the same channel Mach number, 0.27, as the baseline Hastelloy-X liner. Nonetheless, the pressure loss at this "equivalent" Mach number was about 9 percent. Relative to the smooth wall channel at its reference Mach number, the pressure loss is still about three times higher and must be attributed to the turbulator influence.

The influence of turbulators (located on the outer wall of the channel, i.e., on the inside of the jacket) versus a smooth outer wall are best identified in comparative plots of data from the same liner thermocouple in each configuration. Figures V-9 and V-10 show variations of liner temperature with quench air temperature for thermocouples TLINR2C and TLINR3C, respectively, while Figures V-11 through V-14 show liner temperature data during variations of the rich zone equivalence ratio for thermocouples TLINR2A, TLINR2C, TLINR3A and TLINR3C, respectively. The similarity of the liner temperature data from both configurations is extremely good, both in level of the liner temperatures and the slope of the dependency. The agreement is particularly good in view of the extent of circumferential variation in liner temperature observed in Figures V-5 through V-7. The only deviation of mention is in the thermocouple at location 2A in Figure V-11 that shows about a 380°F hotter liner temperature with the smooth outer jacket at high rich-zone equivalence ratios.

Figures V-15 and V-16 are plots of liner temperature for thermocouples TLINR2C and TLINR3A, respectively, versus quench airflow rate comparing the effects of a jacket with and without turbulators. For these particular test series parametrics, only the quench airflow was varied while the rich zone airflow was held constant. This combination of airflow permutations naturally results in variations to the combustor inlet Flow Parameter. However, by conducting this test series in this fashion, the convection coolant heat transfer characteristics can be isolated. The nominal quench airflow at the supersonic cruise simulation is about 2.25 pps for the smooth-walled liner and jacket (without

turbulators). An equivalent Mach number condition in the turbulator jacket configuration occurs at about 1.5 pps quench airflow. The data of both figures indicate that, while there are differences in the slopes of the liner temperature versus quench flow rate characteristics (for the smooth wall configuration without turbulators), both configurations have essentially identical liner temperatures at their reference quench flow rate.

The conclusion from these tests is that, based on the limited data obtained, the jacket with the turbulators increased the pressure drop significantly, but had minimal impact on the liner surface temperatures. While the turbulators apparently produced substantially higher turbulence levels near the outer wall of the channel its influence in the convective heat transfer coefficient on the inner wall was minimal.

Figure V-17 and V-18 shows photographs of the Hastelloy-X liner after 8 hours of testing of which 4 hours were at cruise conditions. The liner was in very good condition on the outside but the thermal barrier coating was beginning to show more deterioration that was not evident in an interim inspection. Figure V-18 shows the area where the thermal barrier coating was chipping off. A liner thermocouple (TLINR2B) was located in this area and this thermocouple was lost very early in the testing.

Figure V-18 also shows the juncture between the Hastelloy-X liner and gasket shield ring assembly. Small gaps can be seen between the liner and the gasket shield ring. These gaps are the result of the liner changing shape during heat-up and cool-down cycles. Small quantities of quench air could have entered the rich-zone combustor upstream of the quench injection orifices through these gaps. However, there was no evidence of distress on the face of the quench air manifold ring.

Directionally solidified Liner with Integral Trip Strips

The cast directionally solidified liner was tested with the jacket without turbulators. Liner thermal data was obtained as a function of the rich-zone equivalence ratio, quench-air temperature, and quench-airflow rate. Ten hours of durability testing was also conducted at the simulated supersonic cruise operating condition.

Liner Heat Transfer Tests

Paralleling Figure V-1 for the configuration with the smooth liner and smooth outer wall, Figure V-19 shows the pressure drop across the 2.813-inch length between pressure taps on the jacket of the liner air shroud normalized by the static pressure at the upstream tap as a function of the Flow Parameter squared (Flow Parameter based on the quench-airflow rate, the quench - manifold pressure and the quench - manifold air temperature). Data from the prior test with the smooth liner and outer jacket are also presented. The pressure loss associated with the liner with trip strips is about three times higher than the pressure loss associated with the smooth liner at the same cooling air passage flow parameter. Operation at the rich zone to quench airflow split desired for producing the rich equivalence ratio per Table III-1 would have dictated a cooling air passage FP^2 of about 0.35 or - according to this data - at a pressure loss of about 7 percent. However, as shown in following data, adequate liner cooling could be maintained at substantially lower cooling airflow rates that allowed lower pressure losses in the jacket. Liner temperature data acquired with this configuration were obtained at nominal or reference airflow of 73 percent of the supersonic cruise airflow (total rig airflow reduced from 3 pps to 2.2 pps). The pressure

loss at this "equivalent" flow condition was about 5 percent. Relative to the smooth wall channel at its reference Mach number, the pressure loss is still about 65 percent higher but will be shown to be beneficial to heat transfer from the liner.

The influence of the trip strips, relative to a smooth liner, is demonstrated in comparative plots of data from the liner thermocouple in each configuration. Figure V-20 shows variations of liner temperature with quench air temperature while Figure V-21 shows similar data during variations of the rich zone equivalence ratio. As in the case of the smooth-walled liner of Figures V-5 and V-6 the circumferential variability and absence of significant trends in the axial distribution negate any need to differentiate between specific thermocouple locations. The same trends evident from the smooth Hastelloy-X liner; i.e. increases in liner temperature with increasing cooling air temperature and decreasing rich zone equivalence ratio; are present in the current data but the significant feature is the appreciably lower liner temperature levels. In general, the nominal or average liner temperatures are 200°F to 300°F lower with the trip strips on the liner at all conditions shown (although shroud pressure loss was 5% versus 3% for the smooth-walled liner).

Figure V-22 shows comparisons of liner temperature versus quench airflow rate with the liner with and without trip strips. For these particular test series parametrics, only the quench airflow was varied while the rich zone airflow was held constant. This combination of airflow permutations naturally results in variations to the combustor inlet Flow Parameter. However, by conducting this test series in this fashion, the convection coolant heat transfer characteristics can be isolated. The nominal quench airflow at the supersonic cruise simulation is about 2.25 pps while the equivalent Mach number condition in the liner with trip strips is about 1.65 pps quench airflow. The data indicate that, while there are wide scatter in the temperature measurements and differences in the slopes of the nominal liner temperature versus quench flow rate characteristics, the trip stripped liner configuration has at least a 200°F advantage on metal temperature at the respective reference quench flow rates.

The conclusion from these tests is that the use of trip strips as turbulators on the external surface of the rich zone liner can substantially enhance turbulence and hence, convective cooling capability of the liner. However, the pressure losses in the cooling air passages are likely to be increased in the process.

Durability Tests

Ten hours of durability testing with directionally solidifed liner was also conducted at the cruise operating conditions. This testing was conducted in two 5-hour test blocks. The nominal test conditions were a total rig airflow rate of 1.65 pps, an airflow split of 24.3% to the rich zone producing a liner cooling or quench airflow rate of 1.25 pps, a quench-air temperature of 1200°F, and a rich-zone equivalence ratio of 1.8. This results in a quench Flow Parameter squared value of about 0.1, yielding a 3% shroud pressure loss during this durability test series.

Figure V-23 contains a plot of liner temperature versus data point number. Sequencing of data point number corresponds to increments of about one half hour in test duration time. Data included on this plot are from both durability test blocks. The liner temperature ranges in both test blocks remain quite consistent and are also consistent with the levels anticipated from Figure V-22 at the 1.25 pps quench airflow condition.

Figure V-24 is a photograph of the front flange and the gas side of the directionally solidified liner after 4 cold to hot to cold cycles and15 hours of testing of which 13 hours was at cruise conditions. The liner and thermal barrier coating were in excellent condition. In contrast to the Hastelloy-X liner, there is minimal indication of liner to flange separation and there was no evidence of air leakage where the liner interfaces with the fuel injector bulkhead face.

Emissions Measurements

The Rich-Quench-Lean combustor rig used as the test vehicle had an array of six gas sampling probes located at the exit from the lean zone of the combustor. These were used for emissions documentation during the course of the liner thermal assessment tests of this task and during the final durability assessment of the cast directionally solidified liner. While the operating procedures and conditions used in the current task departed from those which had optimized the performance and emissions characteristics of the RQL combustor during the effort of Ref., 2, measurements of the emissions were still of value in assuring that the combustor was indeed operating in the intended RQL combusting modes during the evaluations of the liners.

Comparison of the chemical balance determined fuel/air ratio from these gas-sampling probes with that calculated from measured flow rates indicated their ratio was always in the range of 0.90 to 1.15. Within the data set from single liner configurations the spread was generally less and typically within +/- 5 percent. Unburned hydrocarbon species were vanishingly small in all samples (typical emissions index 0.02 to 0.07 gm/kg). Carbon monoxide emissions were generally low. In the case of the Hastelloy-X liner with the smooth and turbulated jackets the emissions indices were all less than 6 to 8 gm/kg with the majority of the samples being about 2 gm/kg. Six to eight gm of carbon monoxide/kg in combination with negligible unburned hydrocarbons is indicative of 99.85 percent combustion efficiency while two gm carbon monoxide corresponds to about 99.95 percent efficiency. These efficiency levels are consistent with the high performance observed in this rig when it was used to generate the design database for the RQL combustor.

When the rig was used for thermal assessment of the directionally solidified cast liner, carbon monoxide levels up to ten and twenty gm/kg were observed at a few test points. These still correspond to combustion efficiencies of 99.5 to 99.7 percent and the slightly depressed levels of efficiency (and correspondingly, slightly elevated levels of carbon monoxide) were most likely due to incomplete mixing at the core of the flow in the quench section. This might be attributable to reduction in the quench air jet momentum due to higher losses in the liner cooling system at particular test conditions in the thermal assessment. However, when this configuration was tested at modest airflow rates during the 10-hour durability evaluation, the carbon monoxide emissions reduced to a more representative level of about 2 gm/kg for the duration of the test.

Figure V-25 is a plot of the nitric oxides emission index versus the lean-zone adiabatic flame temperature calculated using the emission-based fuel/air ratio. These data resulted from variations in the rich-zone equivalence ratio, the inlet air temperature, and the flow split. Data are presented for the Hastelloy-X liner (without trip strips) and for the directionally solidified, cast liner (with trip strips). In general, the NO_x emission index from the Hastelloy-X liner configuration ranges from 5 to 10 gm/kg as

the flame temperature changes from 2500°F to 3000°F. This emission index range is consistent with the previously observed results in the tests of Ref. 2. In the case of the testing with the cast trip strip liner the range of lean zone flame temperatures is higher and at these temperatures the oxides of nitrogen emissions indices progressively increase from about ten gm/kg to nearly twenty gm/kg. This increase, which was also observed in the operation of the rig with the Hastelloy-X liner and the jacket with the turbulators, can be attributed, at least in part, to the unique operating conditions of the rig with these liners. Both required operating at reduced airflow levels that increased the residence time throughout the RQL combustor. The lean-zone residence time, for the test with the smoothed-walled liner and jacket without turbulators, ranged from 1.1 msecs to 1.35 msecs; whereas, the lean-zone residence time, for the test with the cast, trip strip liner in a jacket without the turbulators, ranged from 1.7 msecs to 2.2 msecs. This longer lean-zone residence time will result in higher NO_x emissions particularly if quench zone mixing has been compromised.

Finally, Figure V-26 shows a plot of the nitric oxides emission index versus the data point number over the duration of the ten hour durability assessment with the directionally solidified cast liner with the trip strips. The data from both durability test periods indicate two different levels of NO_x. Some of the measurements indicated a nitric oxides emission index of 12 to 13 gm/kg and other measurements indicated a nitric oxides emission index of 17 to 19 gm/kg. The emissions appear to remain constant at the lower level through most of the first five-hour test period but increase to the higher level for a time at the end. During the second five-hour test period the emissions cycle up and down between the two extremes numerous times. Visual observation of inside of the combustor using the downstream viewing port indicated that the higher emission indices were associated with a fairly uniform light distribution within the combustor. On the other hand the lower emission indices were associated with a bright zone of light in the bottom of the combustor. An explanation was not pursued, but it is suspected the phenomenon is related to some form of bi-stable flow in the lean zone at the lower velocity levels.

SECTION VI CONCLUSIONS

Based on the results presented in this report the following conclusions are reached;

- Externally convectively cooled metallic liners offer the greatest opportunity for low risk, moderate durability liners for the rich combustion zones of Rich-Quench-Lean combustors.
- The convective heat transfer on the outside surface of a rich zone liner may be enhanced with the use of trip strips to promote turbulence. However, the strips must be on the liner proper and not the opposite wall to be effective. The use of turbulence enhancement devices will increase pressure losses in the cooling air channel.
- Directional solidified casting appears to be a viable process for fabricating rich zone liners for near term rapid response experimental hardware. The superior high temperature properties of these metals are an added advantage.
- Monolithic ceramics do not appear to be sufficiently mature for rapid processed experimental combustor liners.
- While unique, internally cooled wall structures could find application in future combustor products (as those combustor designs mature), the complex fabrication method is not consistent with the need for rapid turnaround experimental hardware during the combustor aerodynamic development process.

REFERENCES

1.) The Atmospheric Effects of Stratospheric Aircraft: A Fourth Program Report, NASA Reference Publication 1359, January 1995

2.) Rosfjord, T.J. and Padget, F.C. Experimental Assessment of the Rich/Quench/Lean Combustor for High Speed Civil Transport Aircraft Engines, Final Report on Task 3 of NASA Contract NAS3-25952, December 1995

3.) HSCT Combustor Concept Study Final Report, Enabling Propulsion Materials (EPM) Program, NAS3-26385, Task A.2.2 – Identification of Alternate Designs, Gencorp Aerojet for United Technologies Pratt & Whitney, May 1994

4.) "MARC General Purpose Finite element Program", MARC Analysis Research Corporation, Palo Alto, CA 94306

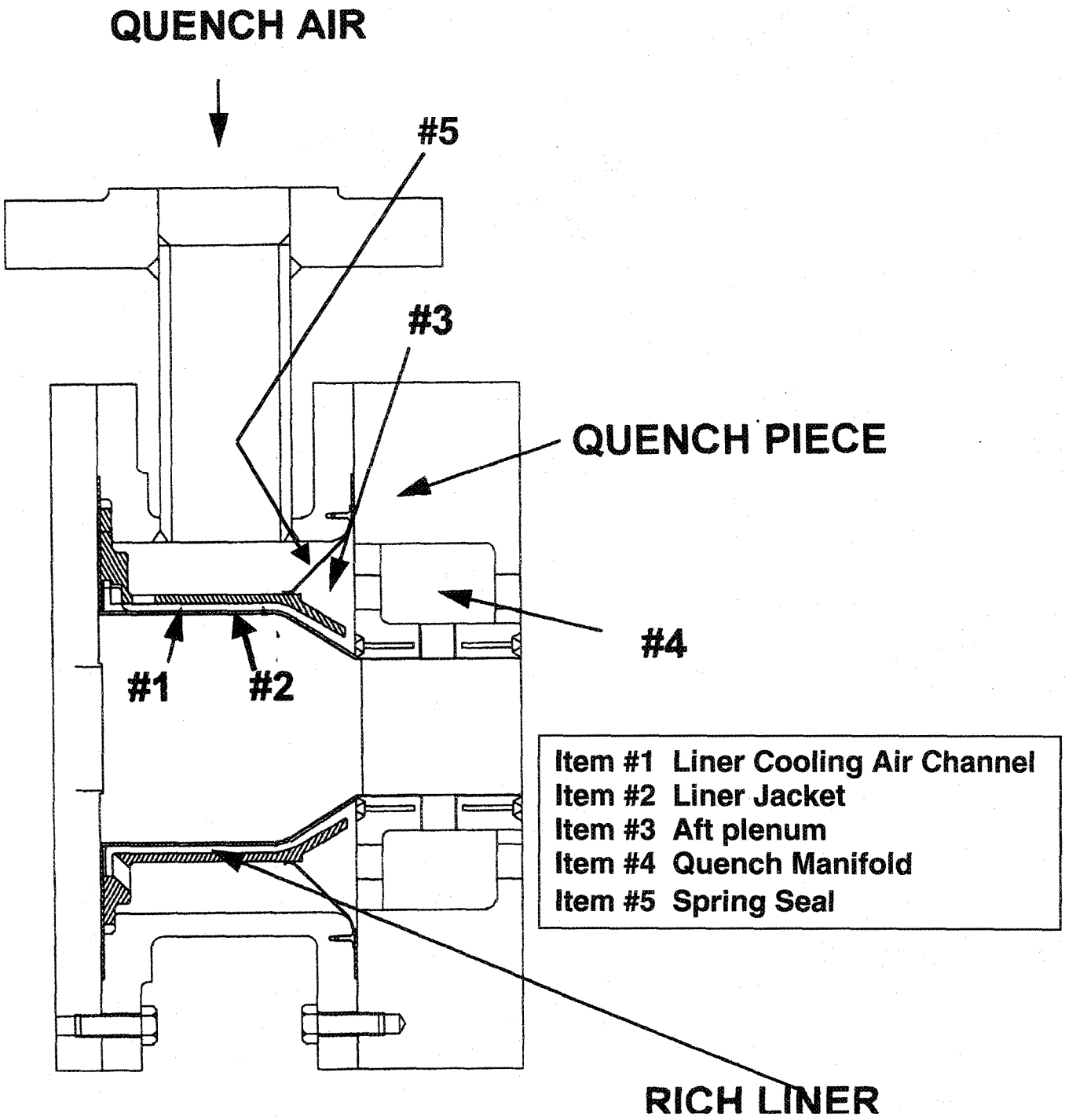

Figure III-1. Modified Section of the Cylindrical RQL Combustor Rig.

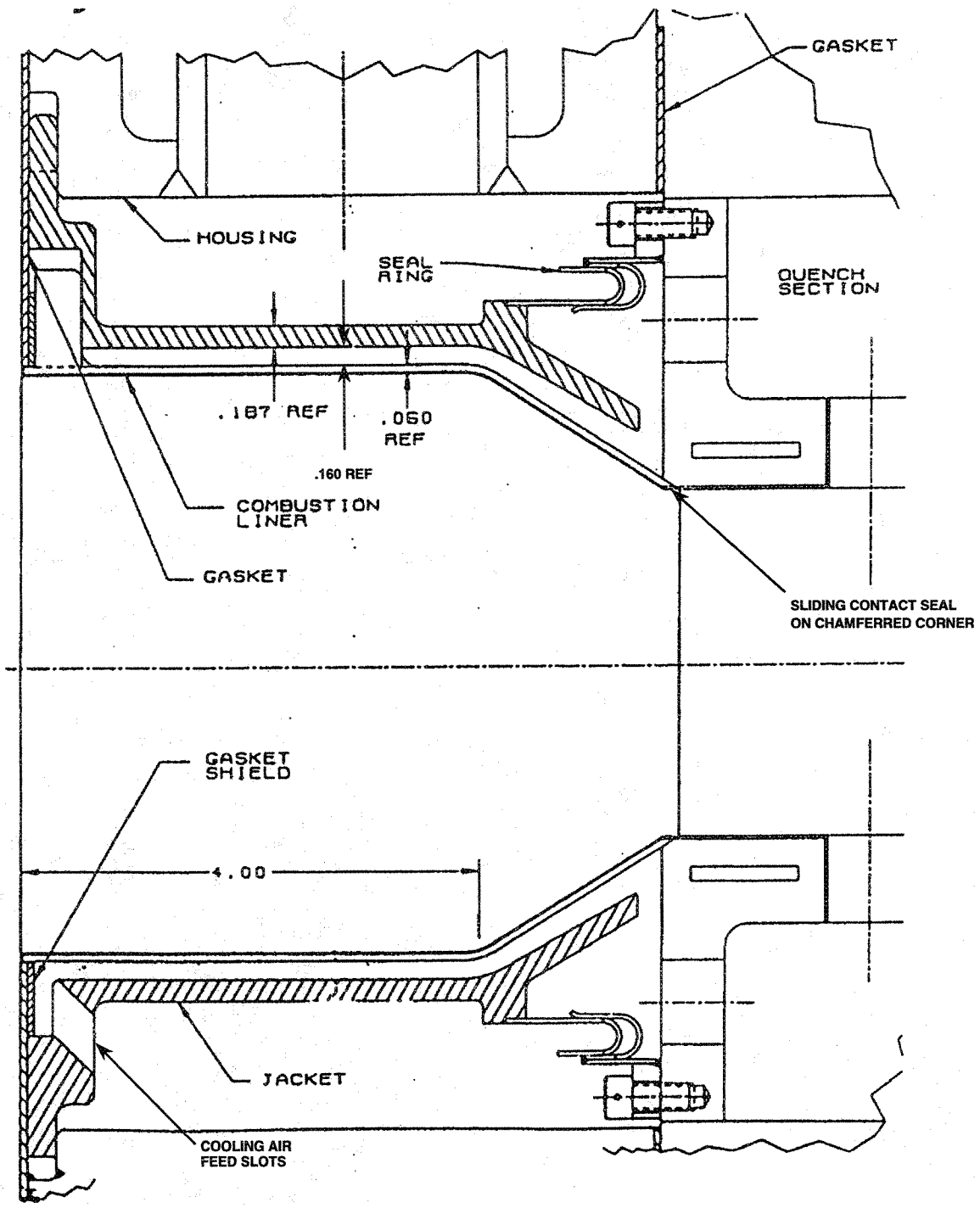

Figure III-2. Spun Metallic Liner Installation Details

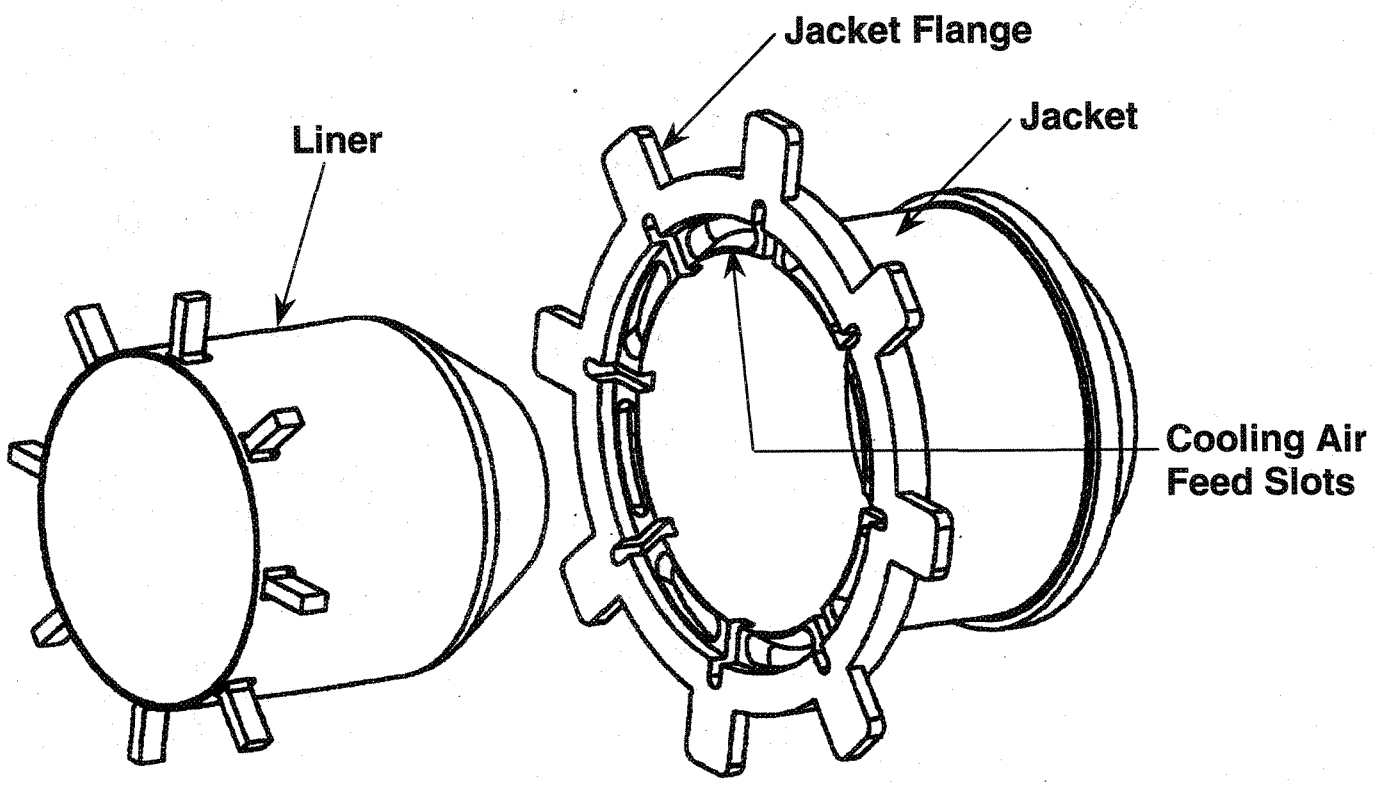

Figure III-3. Metallic Rich Zone Liner and Jacket Ring.

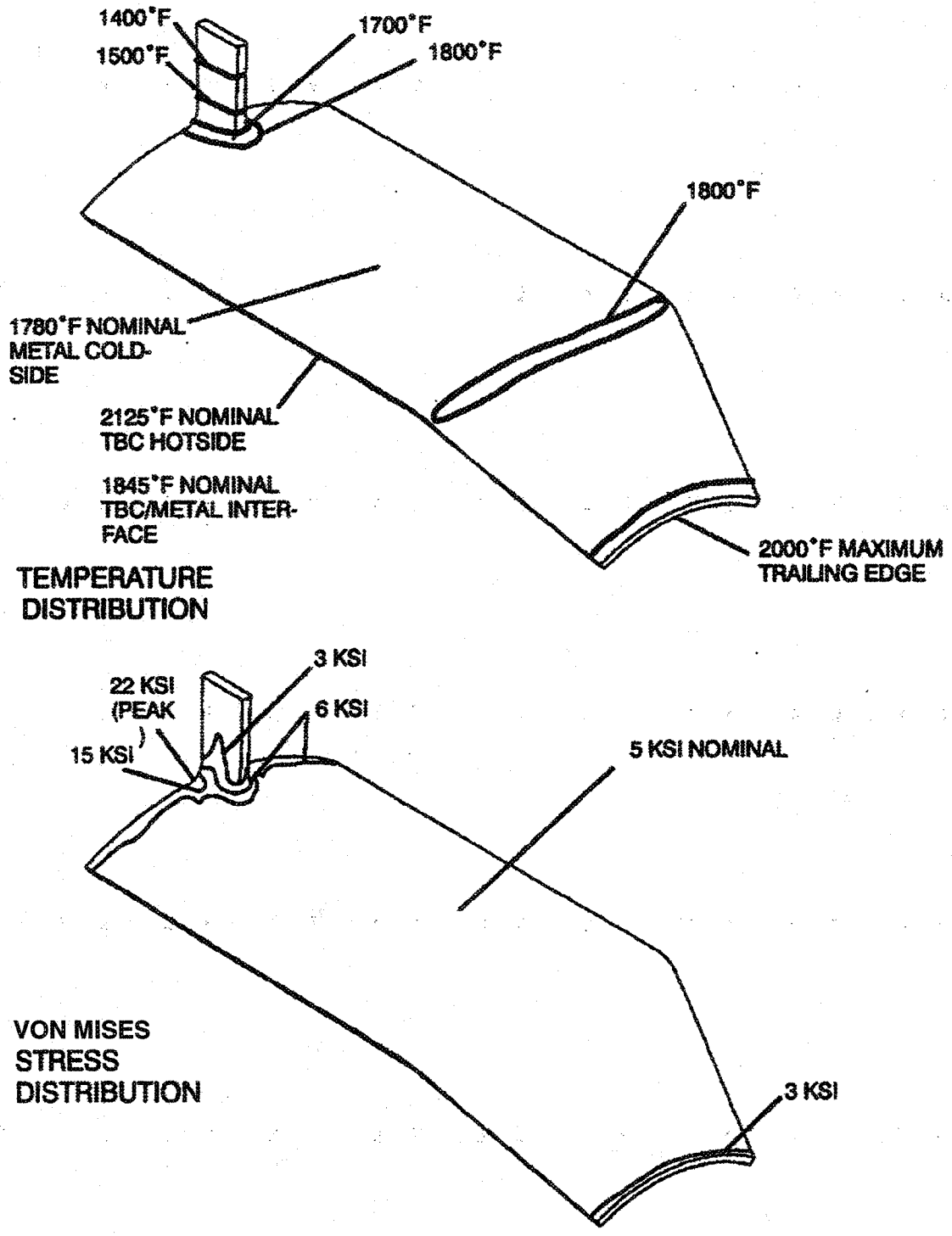

Figure III-4. Thermal/Structural Analysis of Metal Liner.
(45 Deg. Model of Full 360 Deg. Cylinder Liner)

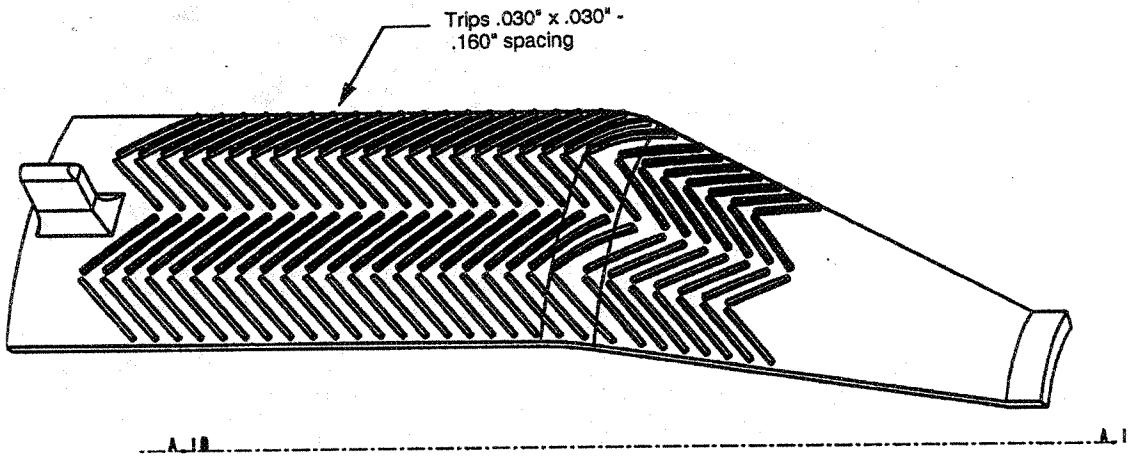

Figure III-5. Directionally Solidified Cast liner with Integral Trip Strips.
(45 Deg. Model of Full 360 Deg. Cylinder Liner)

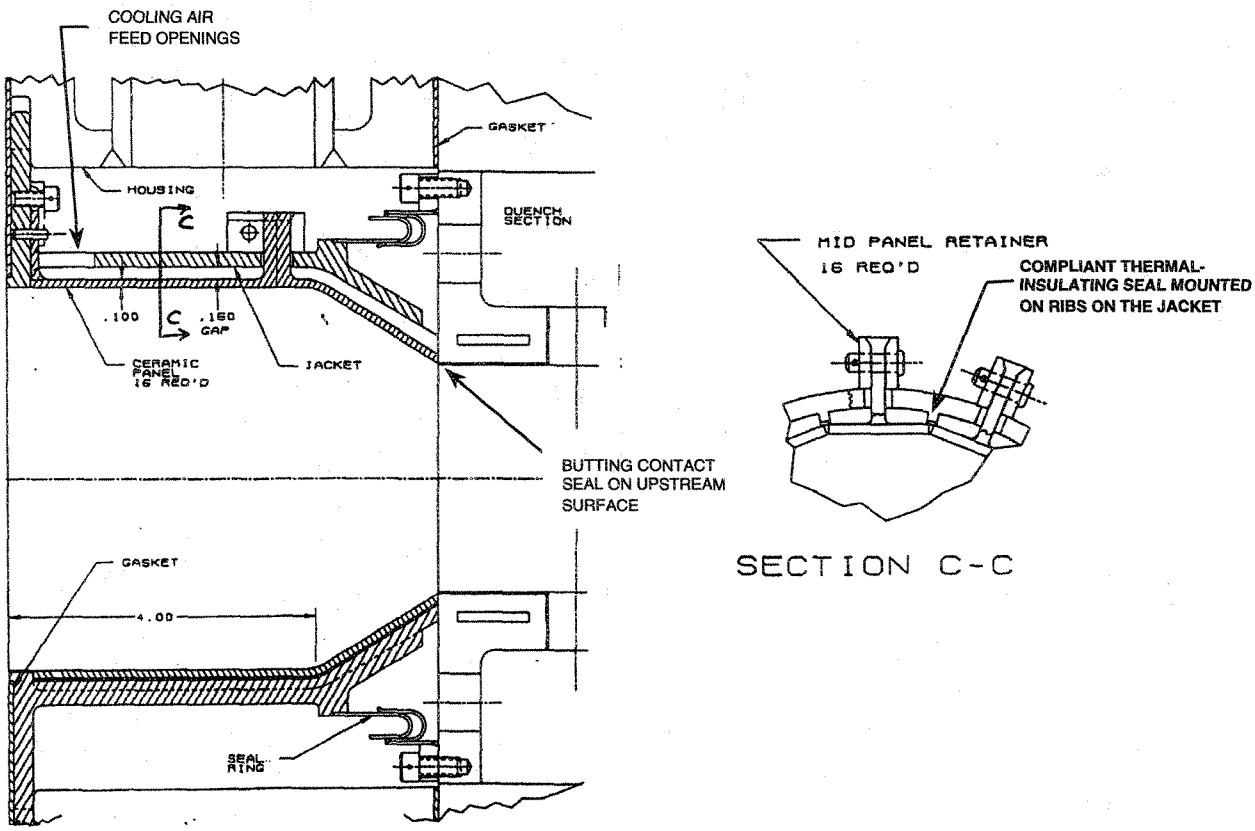

Figure III-6. Segmented Monolithic Ceramic Liner.

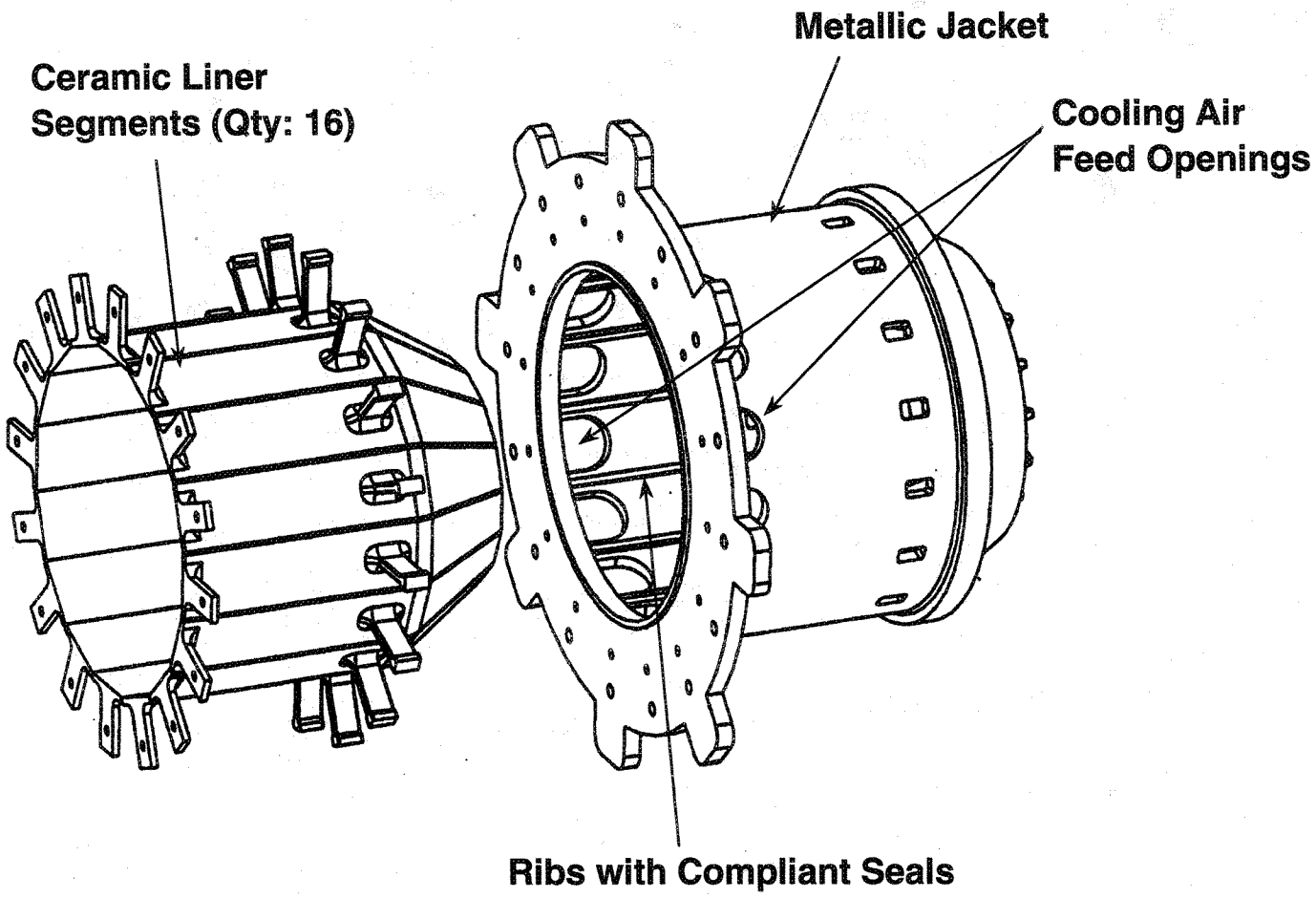

Figure III-7. Initial Configuration of the Monolithic Ceramic Liner and its Retaining Jacket.

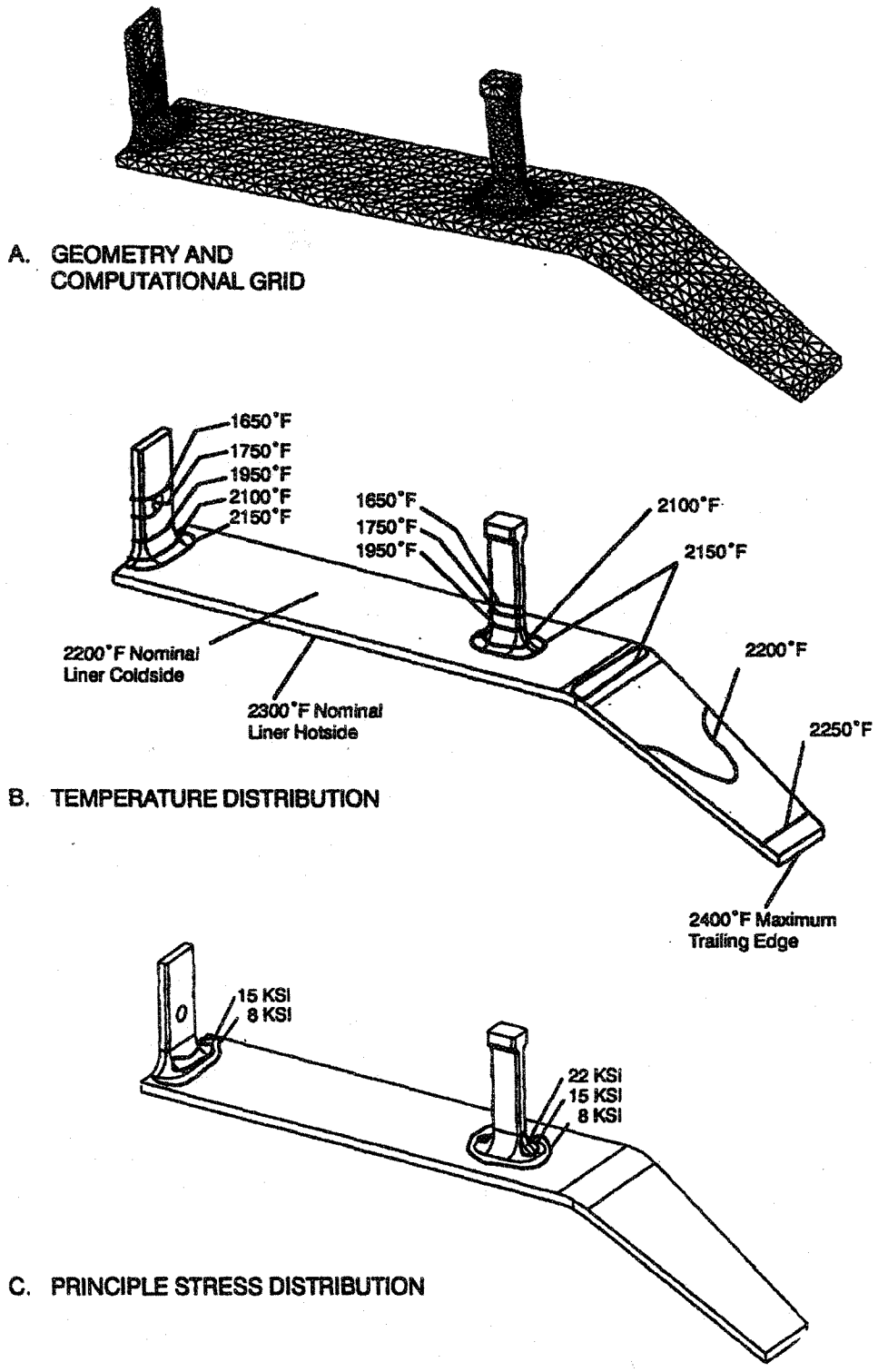

Figure III-8. Thermal/Structural Analysis of Axially Segmented Ceramic Liner.

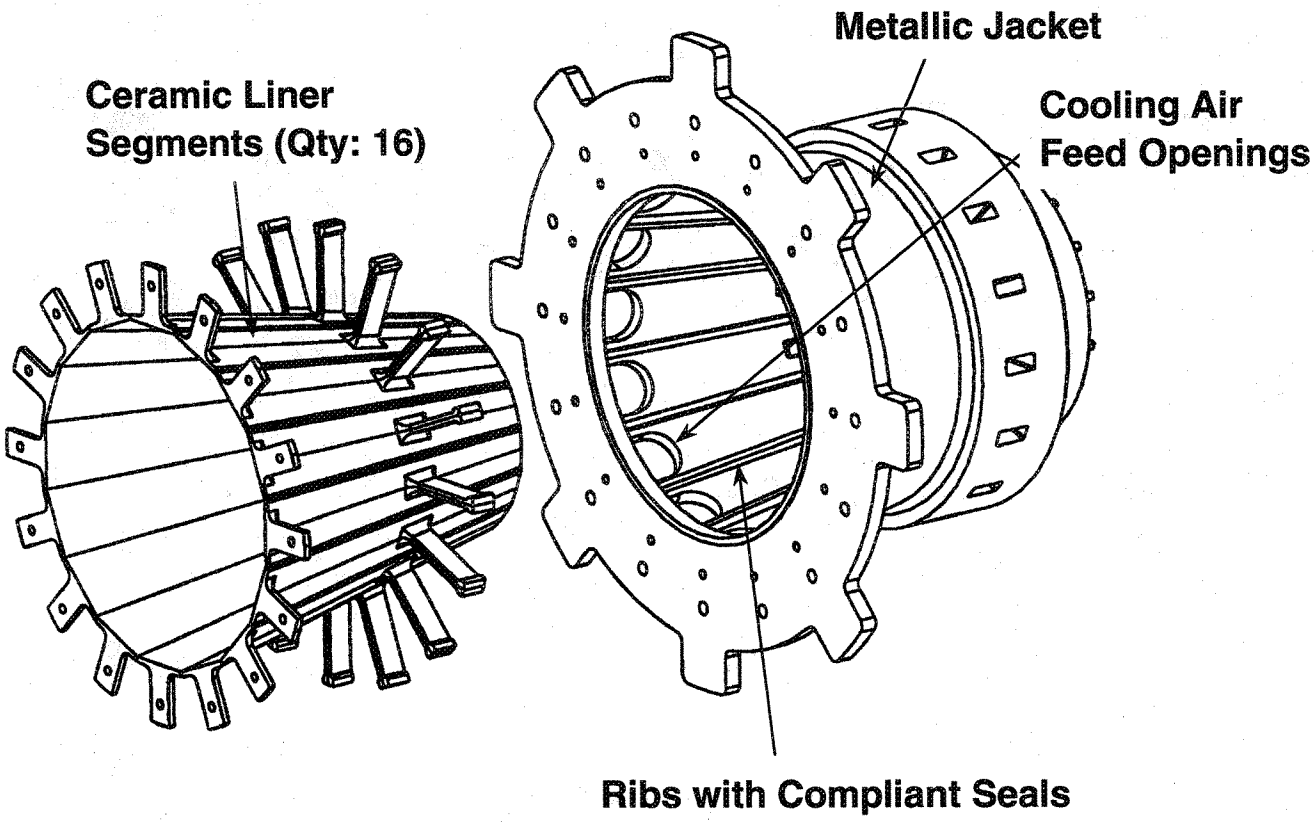

Figure III-9. Second Configuration of the Segmented Ceramic Liner After Revision to Conical Shape.

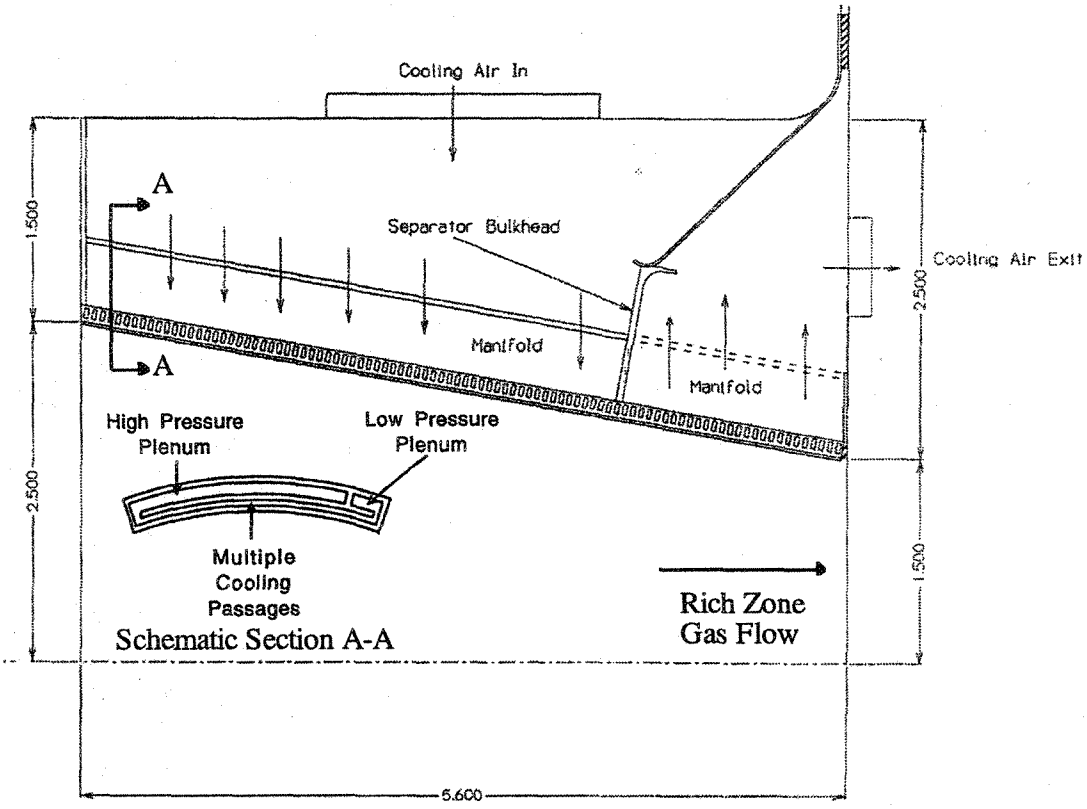

Figure III-10. Internally Cooled Aerojet Platelet Liner Concept.

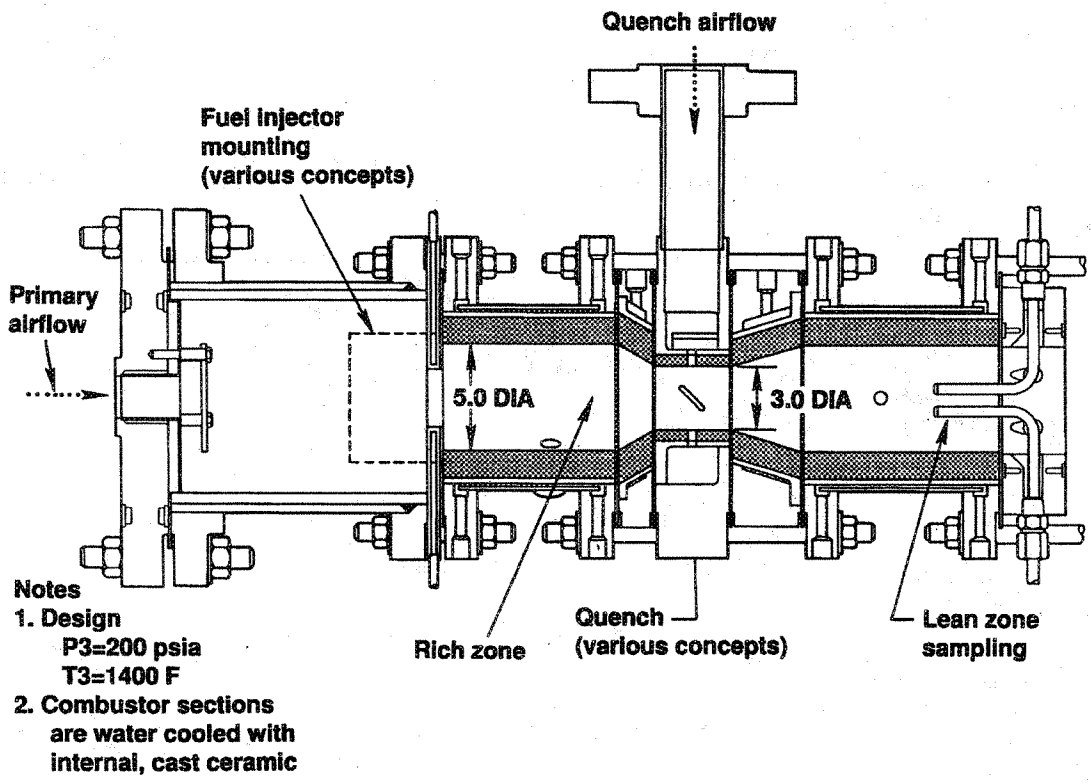

Figure IV-1A. Cylindrical RQL Combustor Rig.

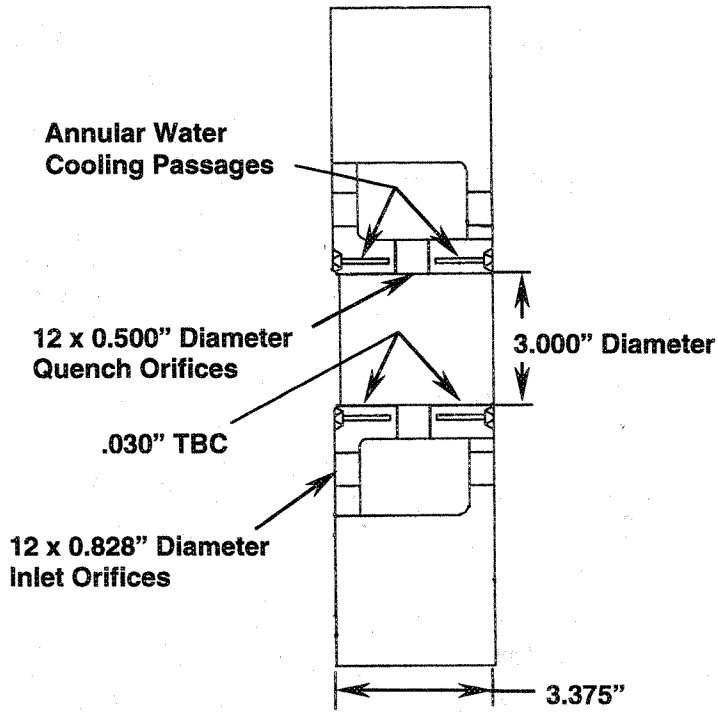

Figure IV-1B. Modified Quench Section of the Cylindrical RQL Combustor Rig.

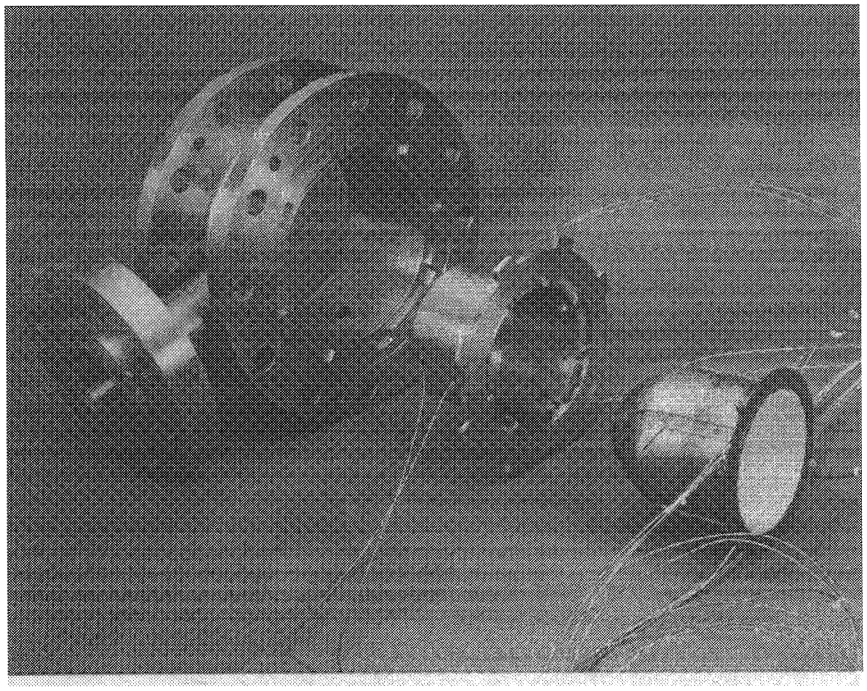

Figure IV-2. Components of Modified Rich Zone Including Experimental Liner and Jacket.

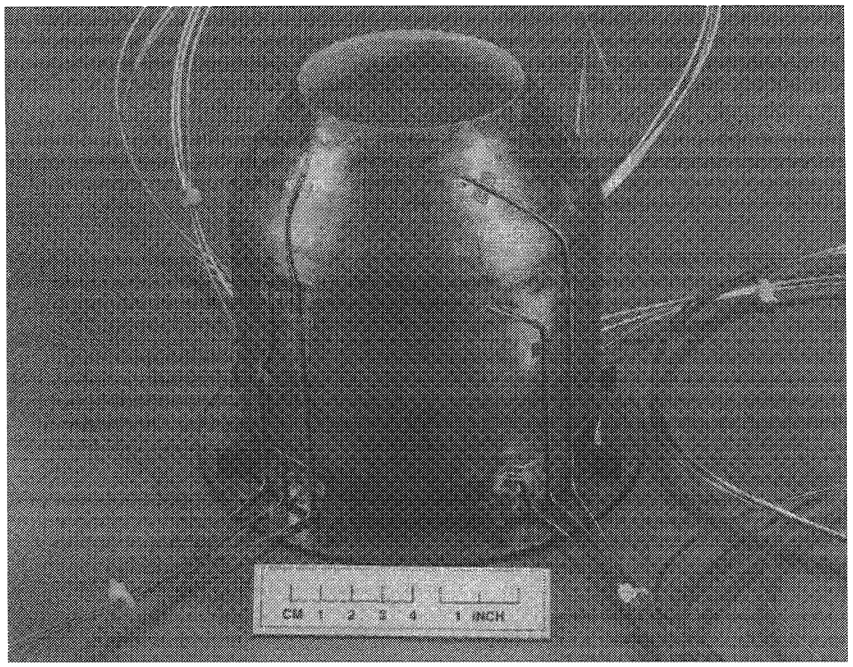

Figure IV-3. Instrumented Spun Hastelloy X Liner.

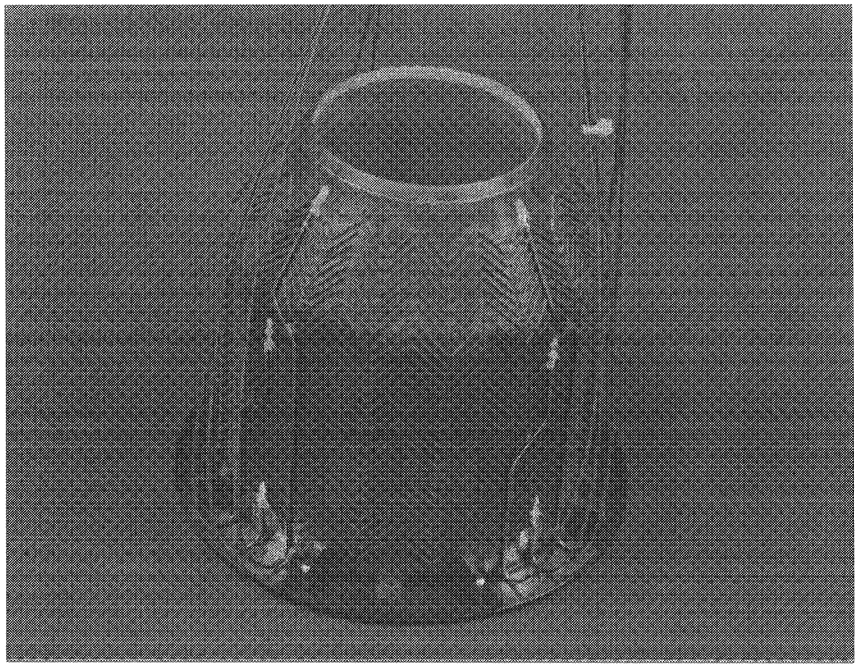

Figure IV-4. Instrumented Cast Directional Solidified Liner.

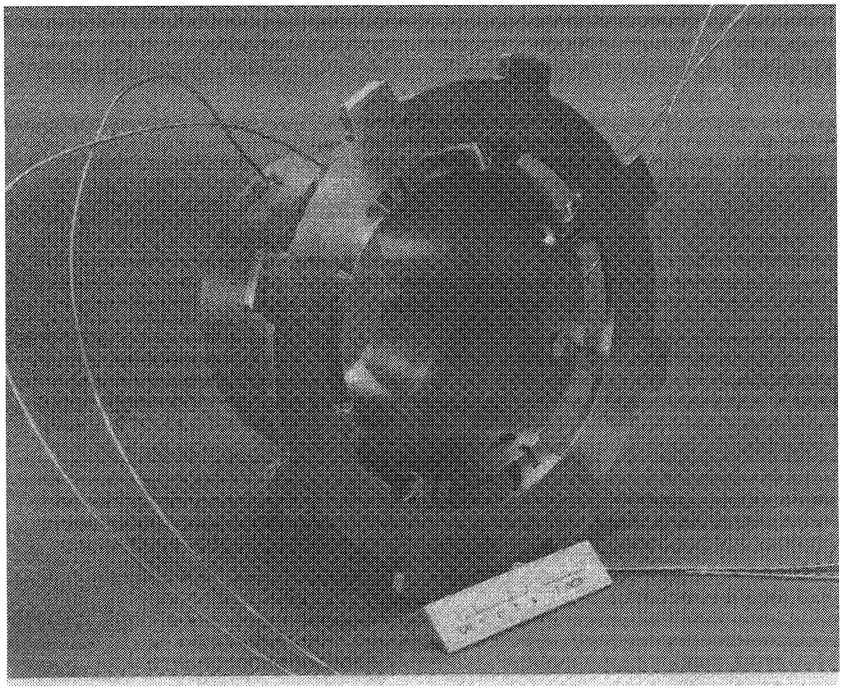

Figure IV-5. Smooth Wall Rich Zone Liner Jacket.

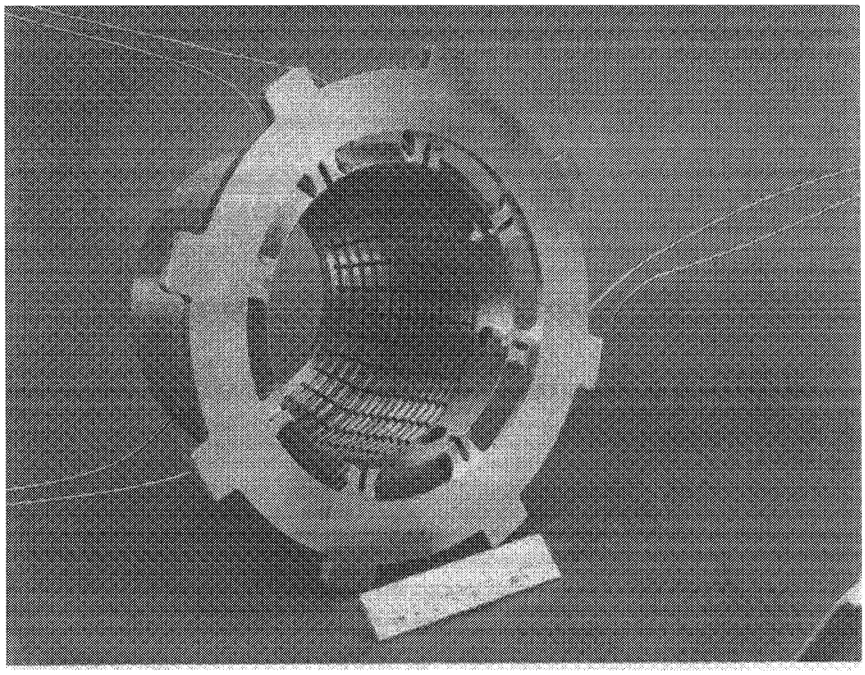

Figure IV-6. Rich Zone Liner Jacket With Turbulators.

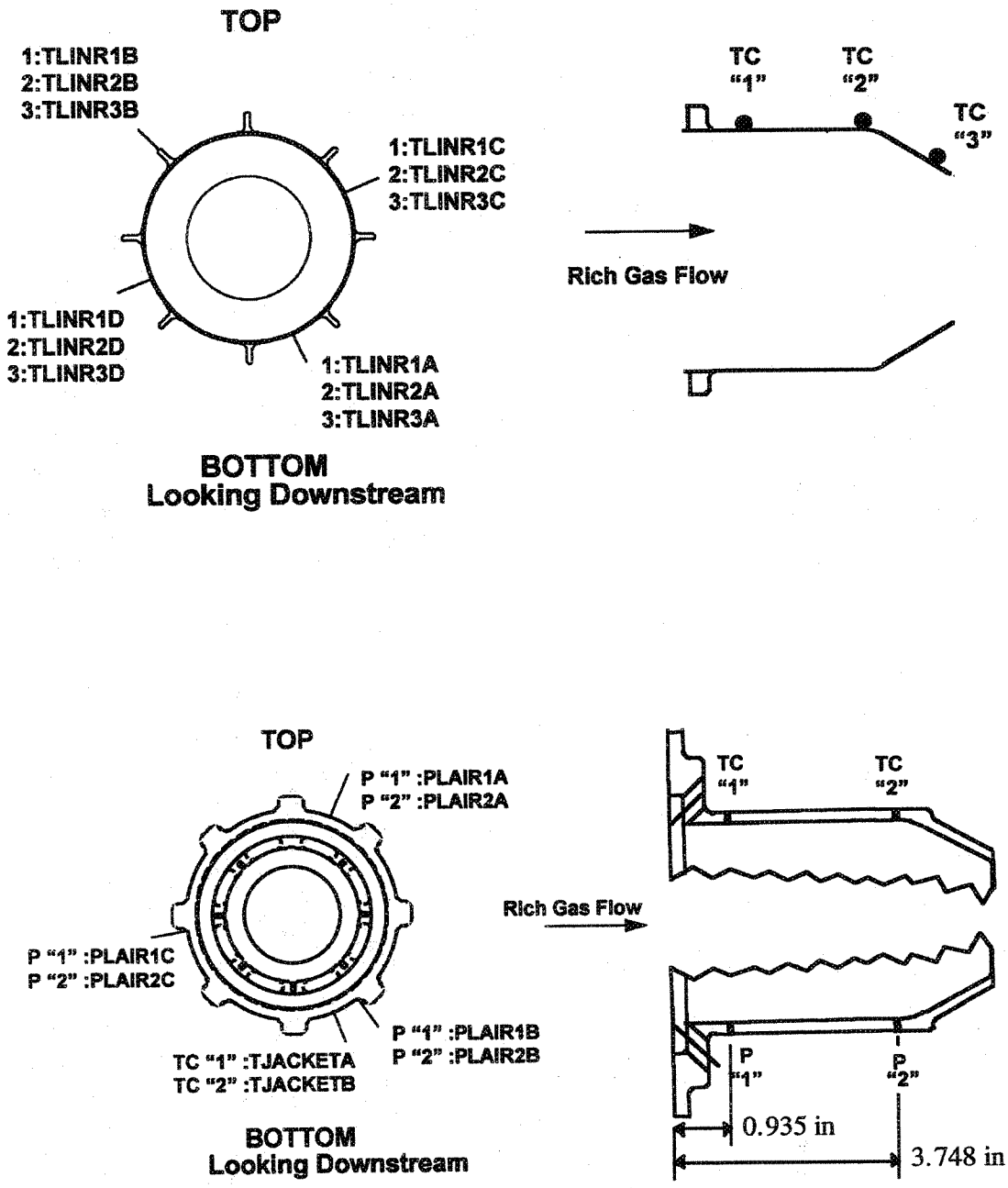

Figure IV-7. Temperature and Pressure Instrumentation on the Liners and Jackets.

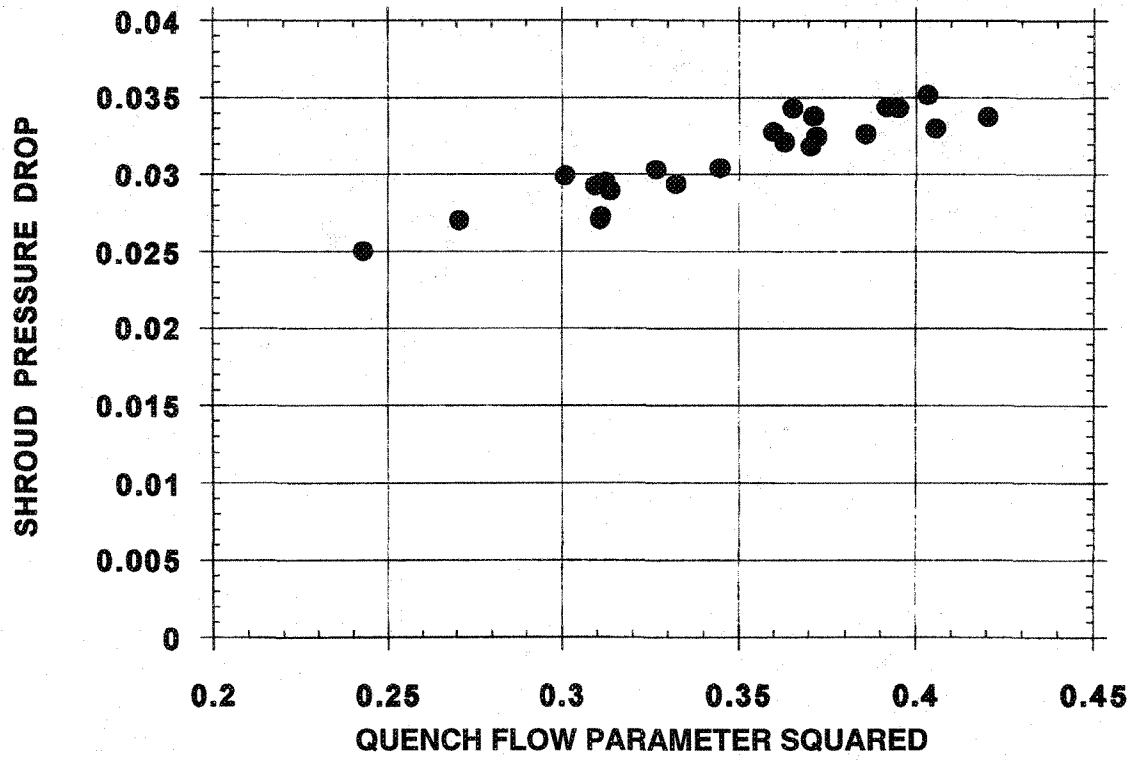

Figure V-1. Pressure Loss Characteristic of the Sheet Metal Liner with Smooth Jacket.

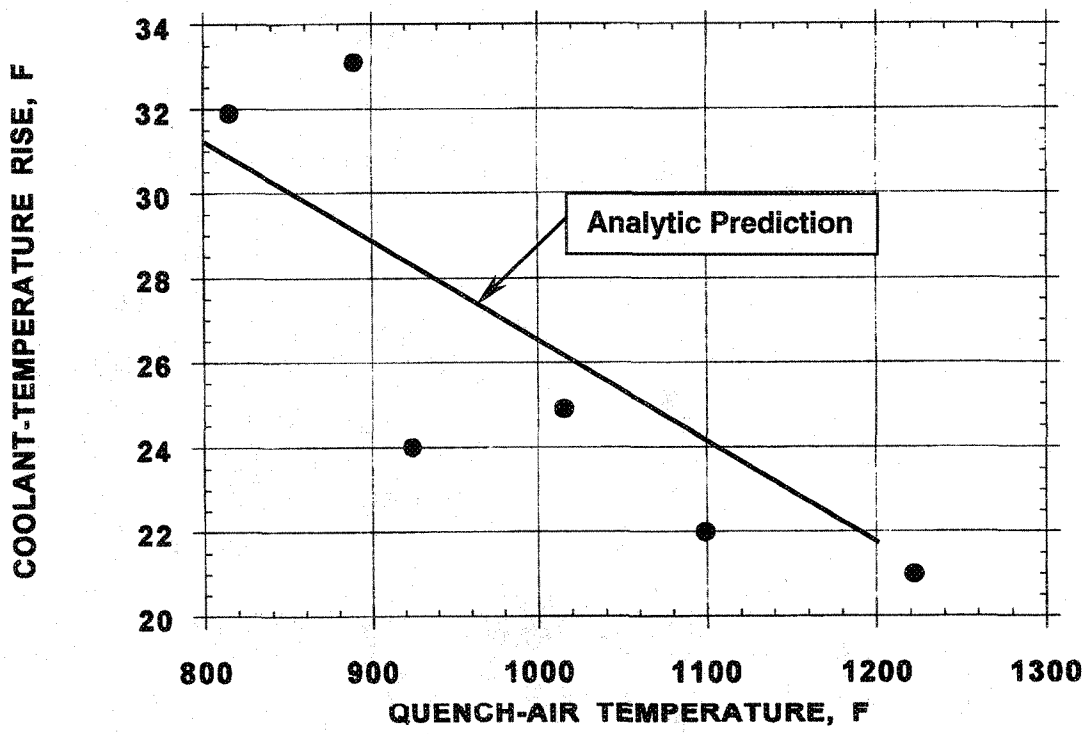

Figure V-2. Coolant Temperature Rise as a Function of Quench Air Temperature; Sheet Metal Liner with Smooth Jacket.

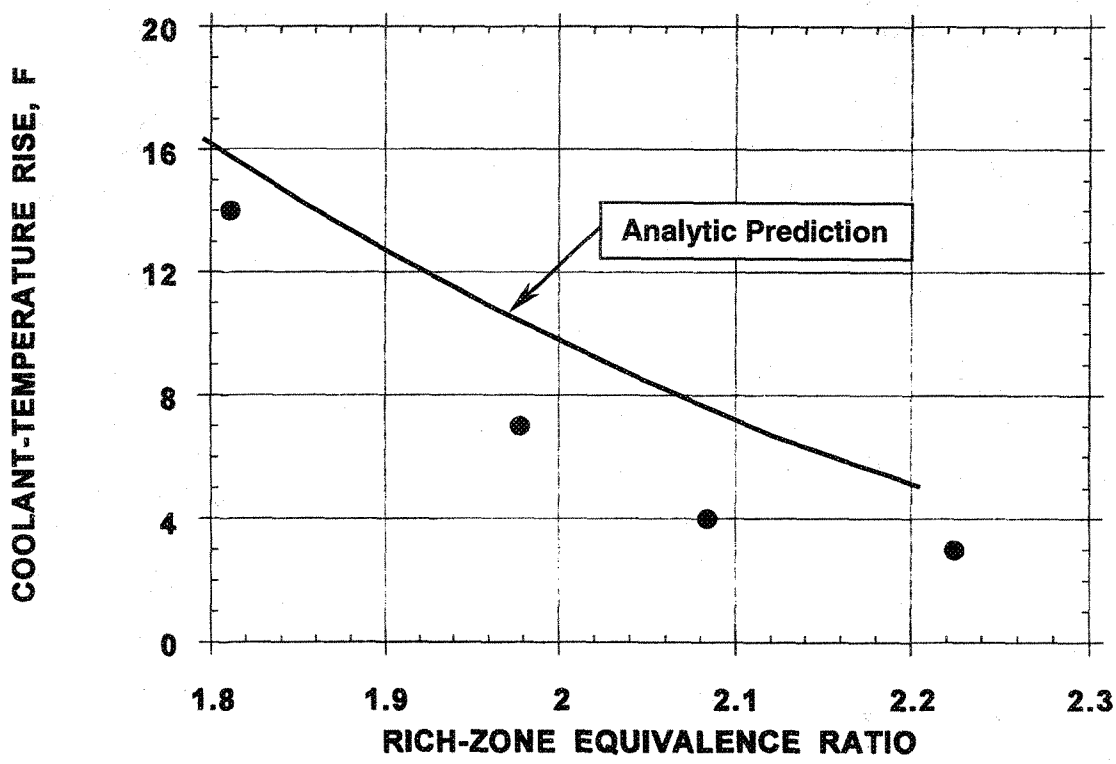

Figure V-3. Coolant Temperature Rise as a Function of Rich Zone Equivalence Ratio; Sheet Metal Liner with Smooth Jacket.

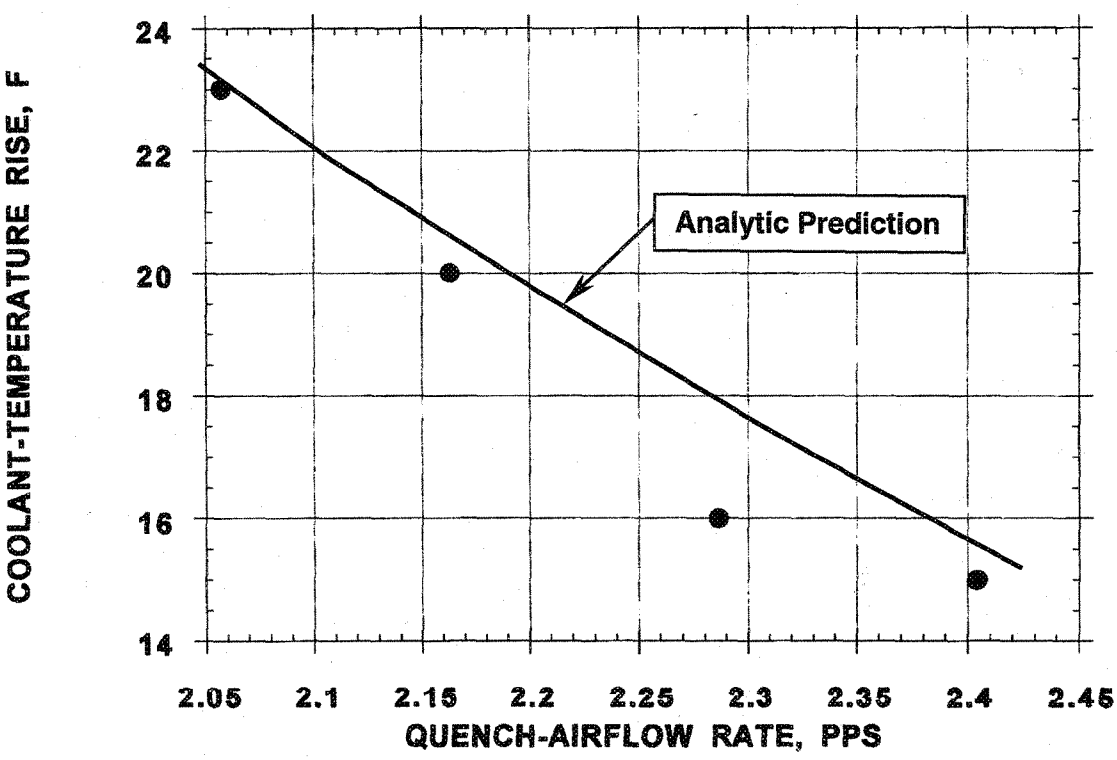

Figure V-4. Coolant Temperature Rise as a Function of Quench-Airflow Rate; Sheet Metal Liner with Smooth Jacket.

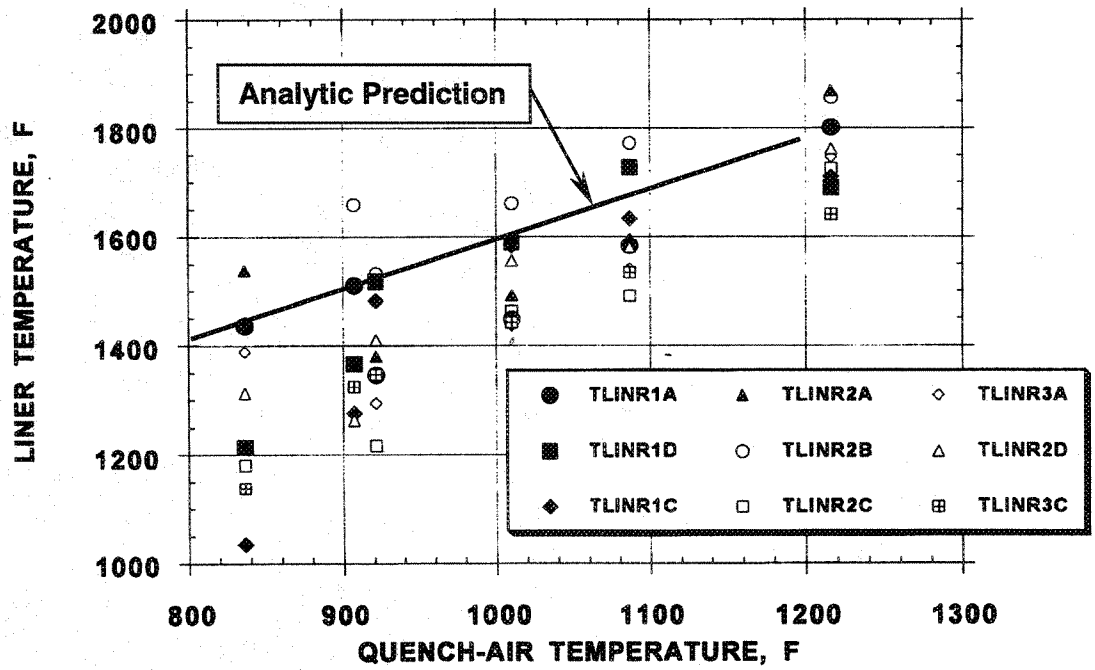

Figure V-5. Liner Temperatures with the Sheet Metal Liner with Smooth Jacket.

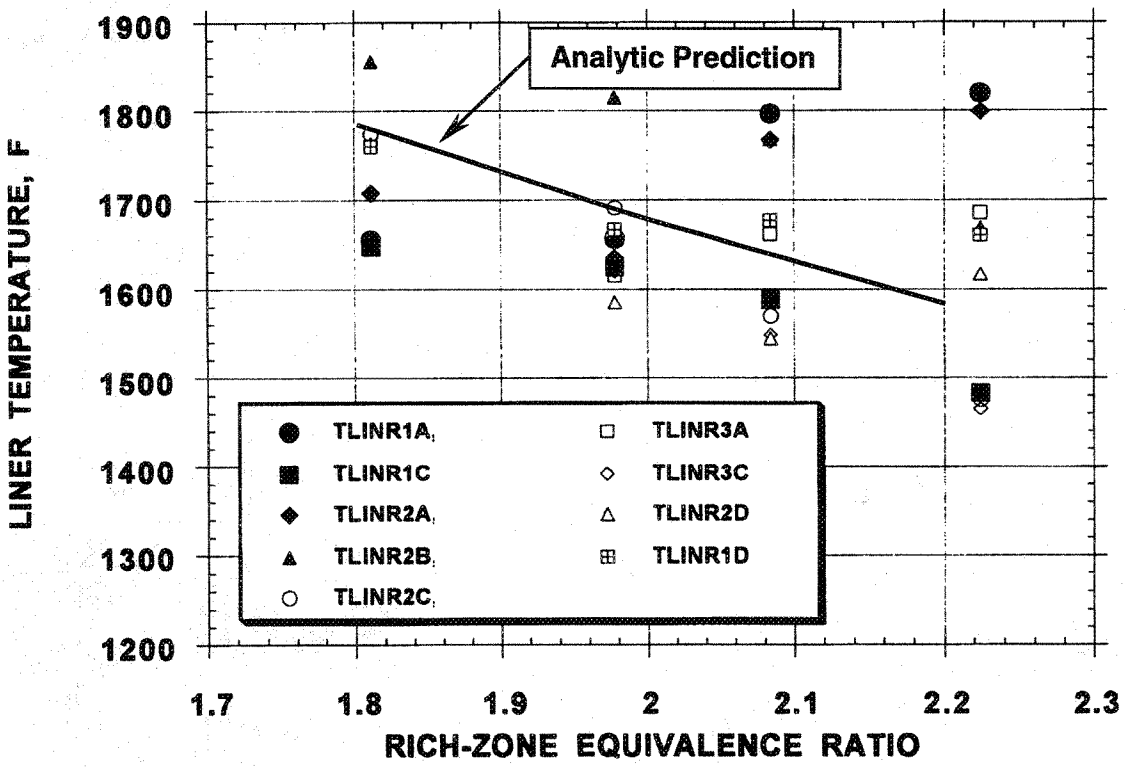

Figure V-6. Liner Temperatures with the Sheet Metal Liner with Smooth Jacket.

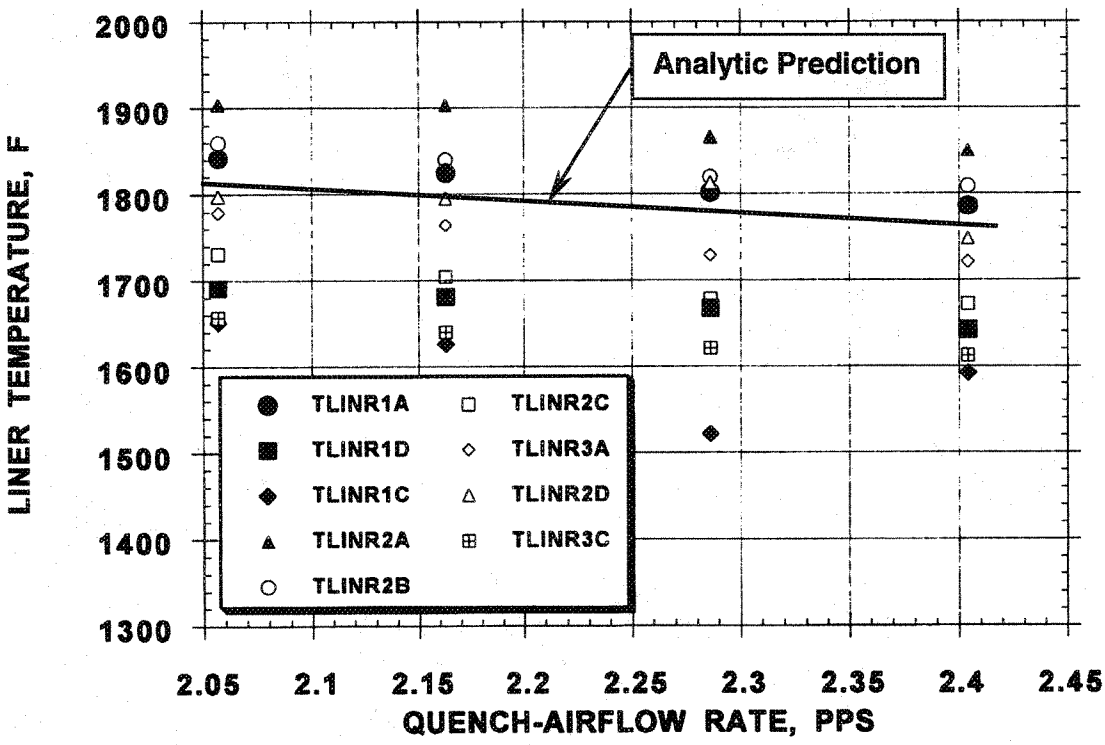

Figure V-7. Liner Temperatures with the Sheet Metal liners with Smooth Jacket.

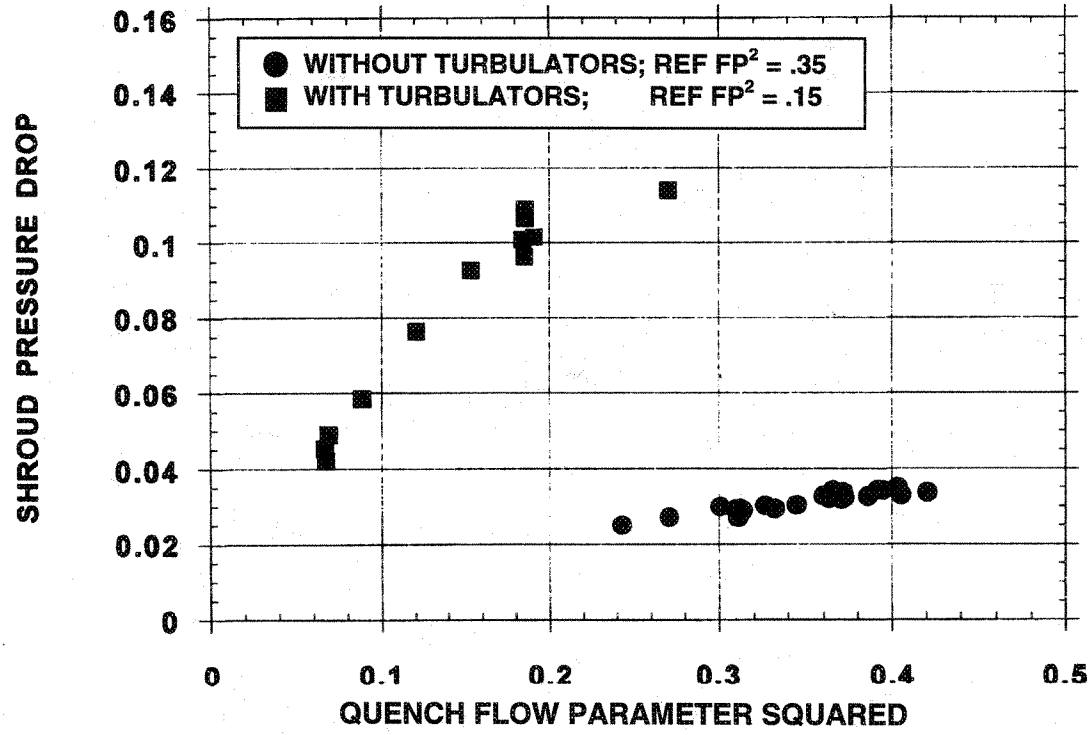

Figure V-8. Effect of Turbulators on the Jacket on Pressure Drop.

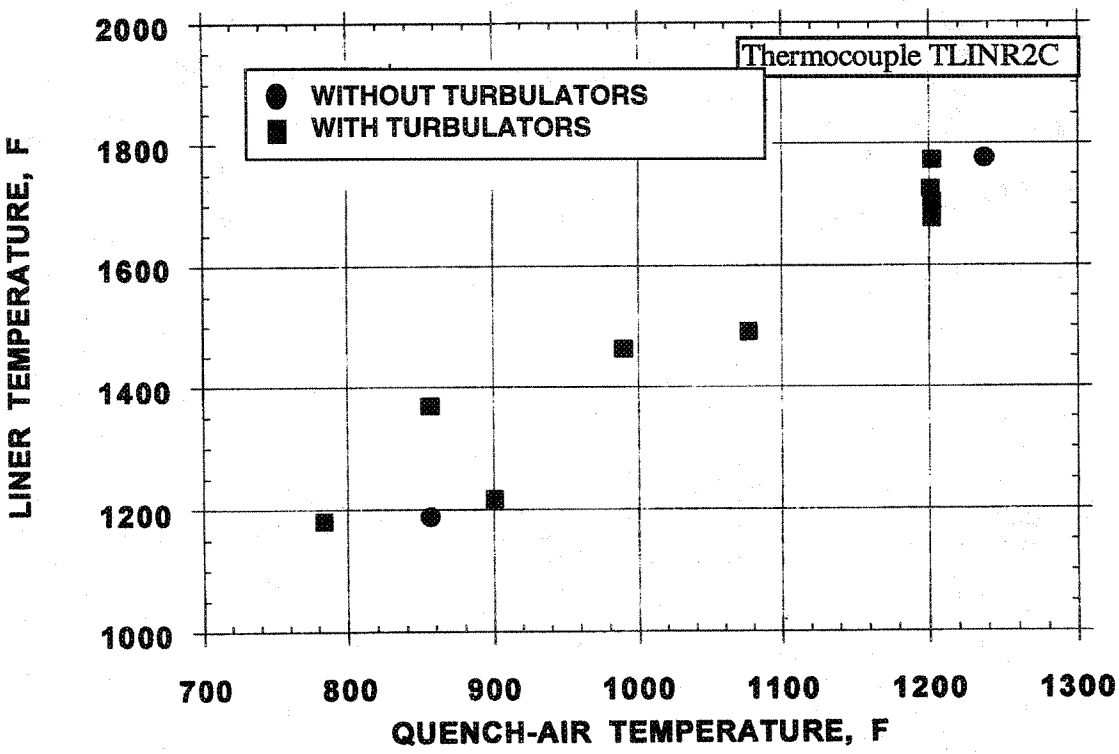

Figure V-9. Effect of Turbulators on the jacket on Liner temperatures at 2C.

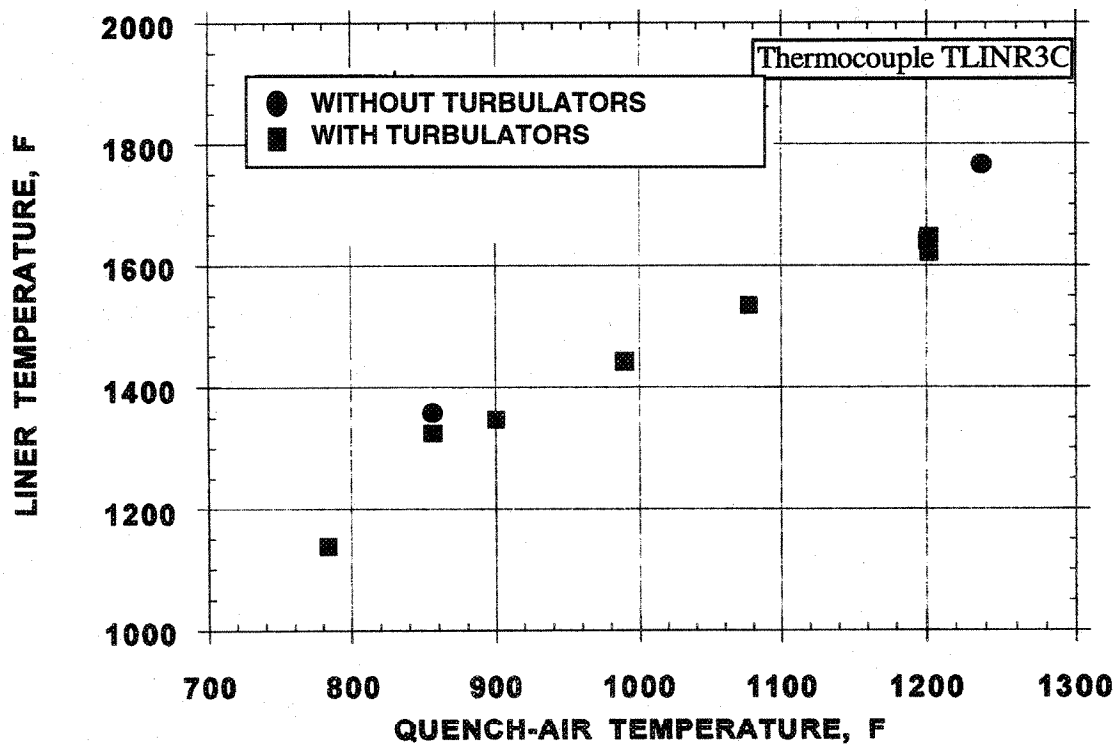

Figure V-10. Effect of turbulators on the Jacket on Liner Temperatures at 3C.

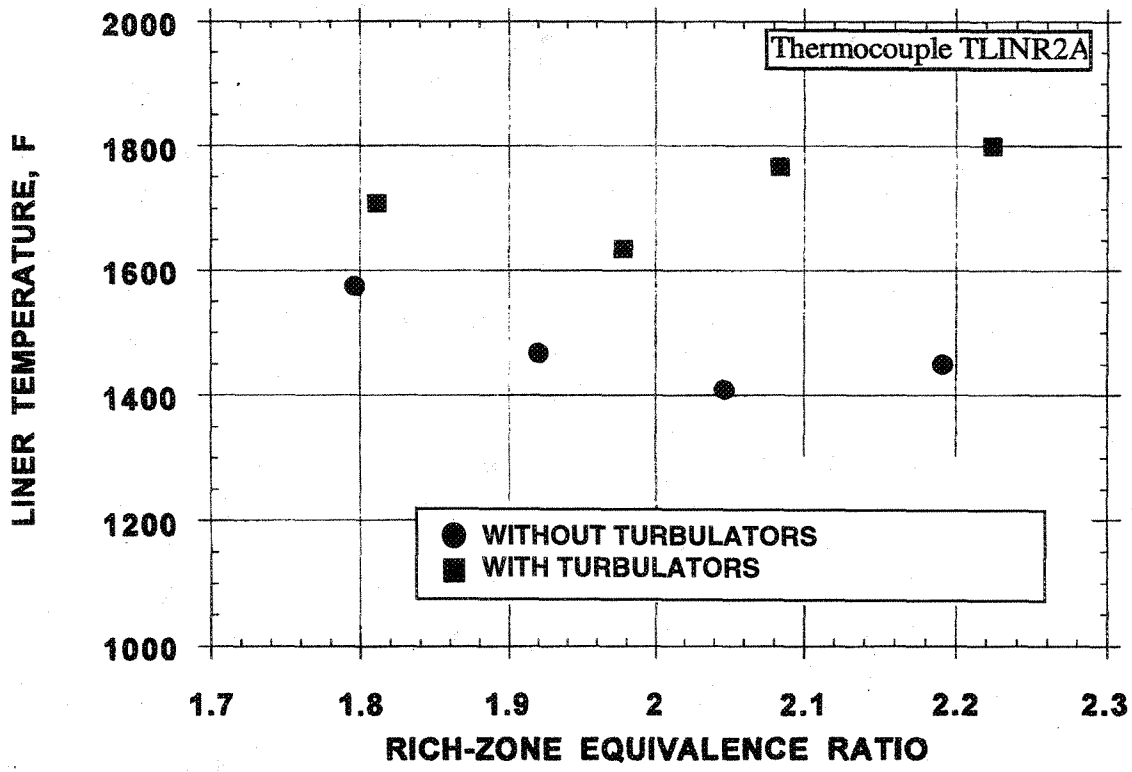

Figure V-11. Effect of Turbulators on the Jacket on Liner Temperatures at 2A.

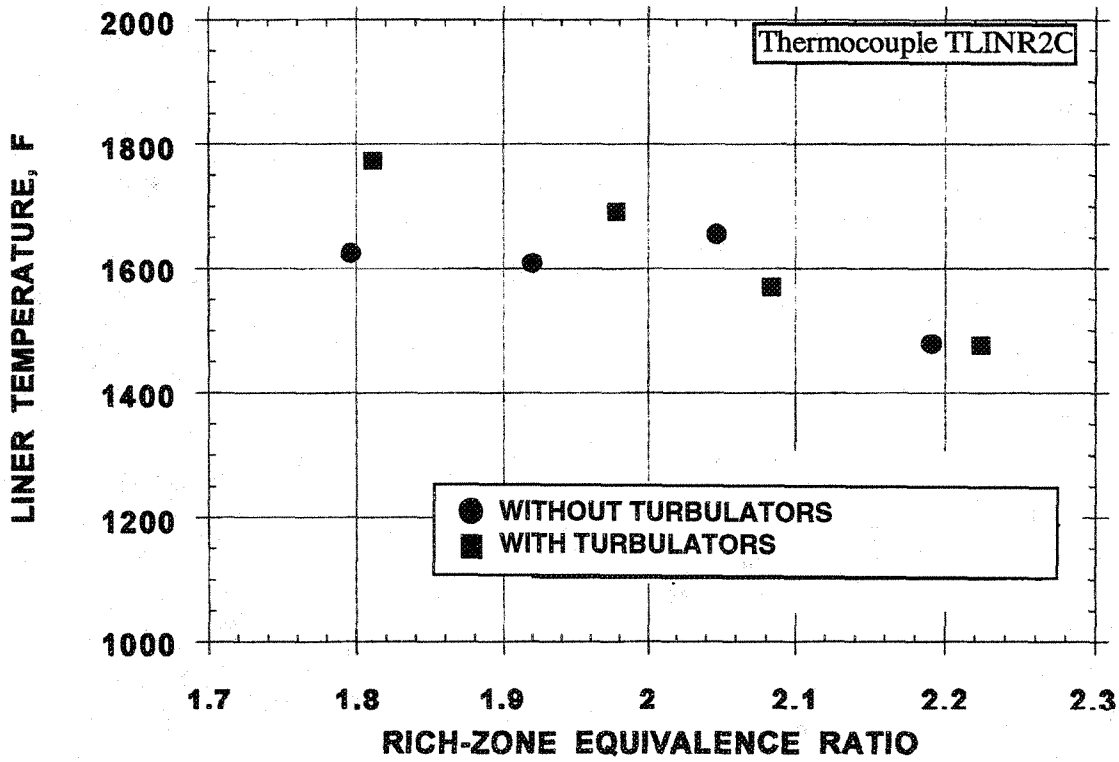

Figure V-12. Effect of Turbulators on the Jacket on Liner Temperatures at 2C.

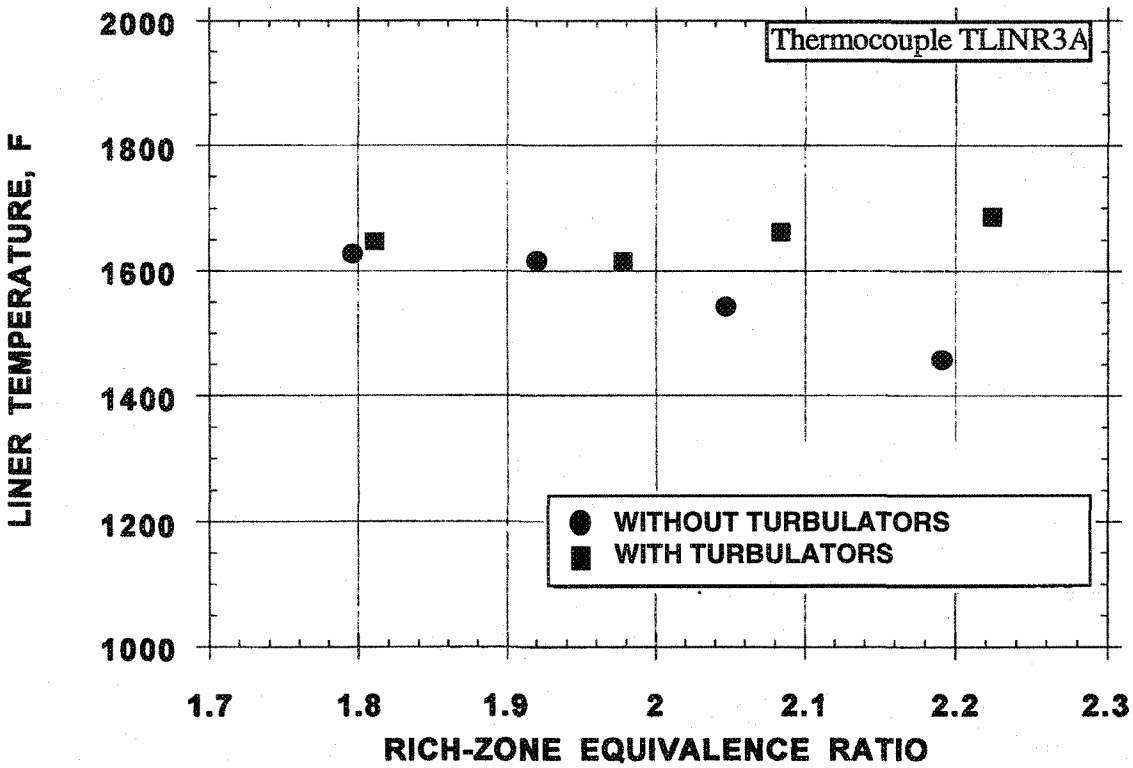

Figure V-13. Effect of Turbulators on the Jacket on Liner Temperatures at 3A.

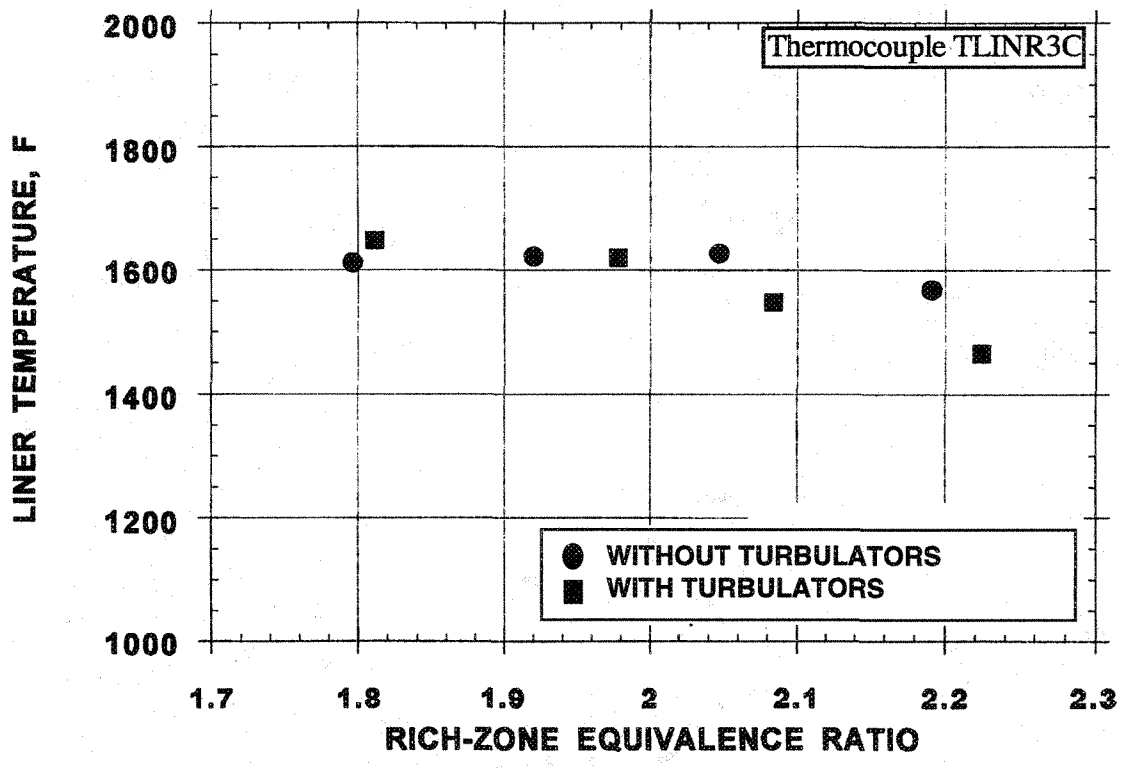

Figure V-14. Effect of Turbulators on the Jacket on Liner Temperatures at 3C.

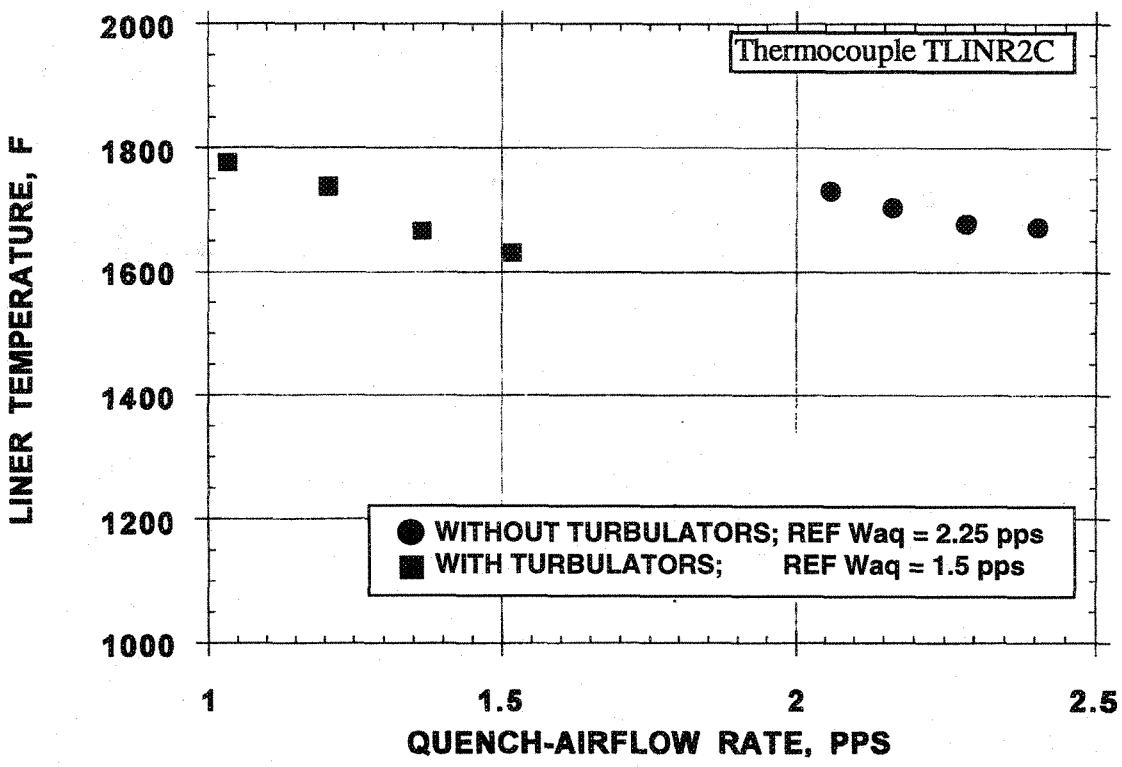

Figure V-15. Effect of Turbulators on the Jacket on Liner Temperatures at 2C.

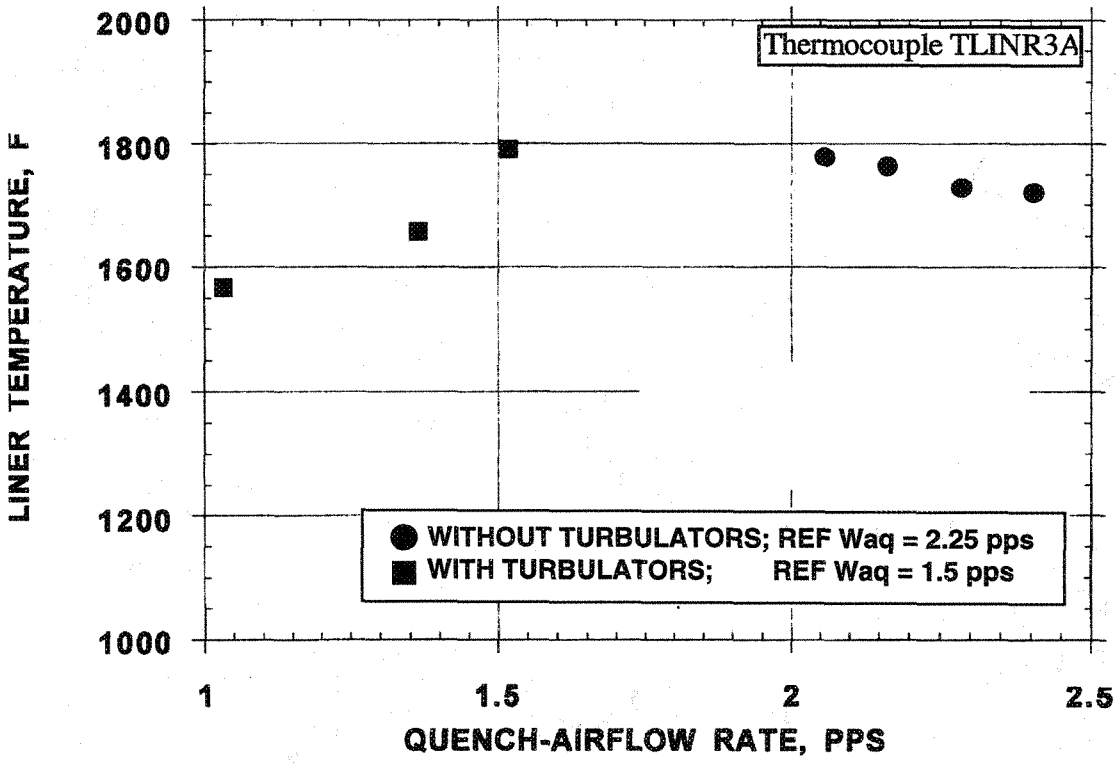

Figure V-16. Effect of Turbulators on the Jacket on Liner Temperatures at 3A.

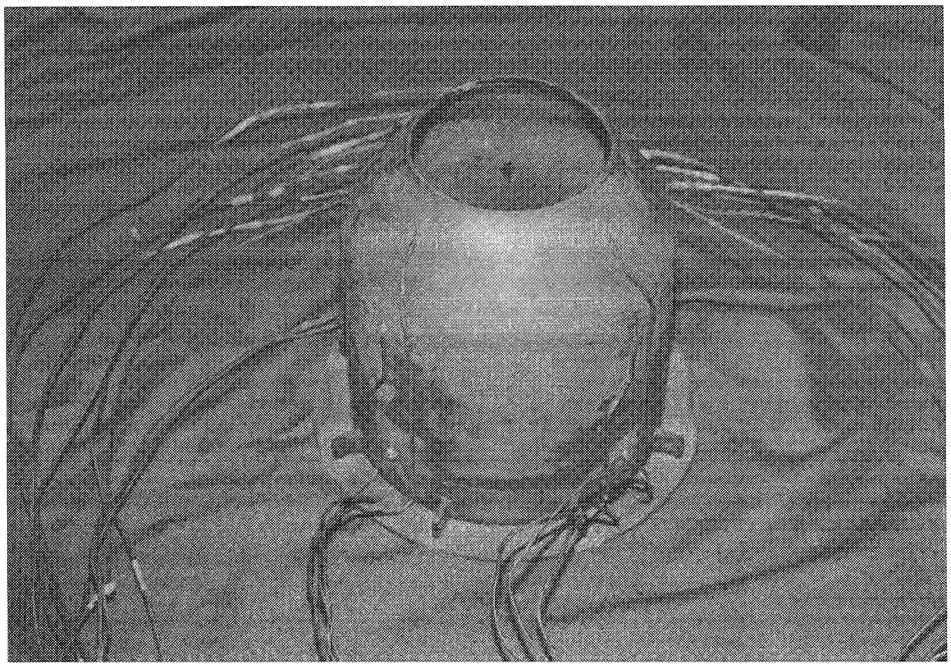

Figure V-17. Post Test View of Hastelloy X Rich Zone Liner.

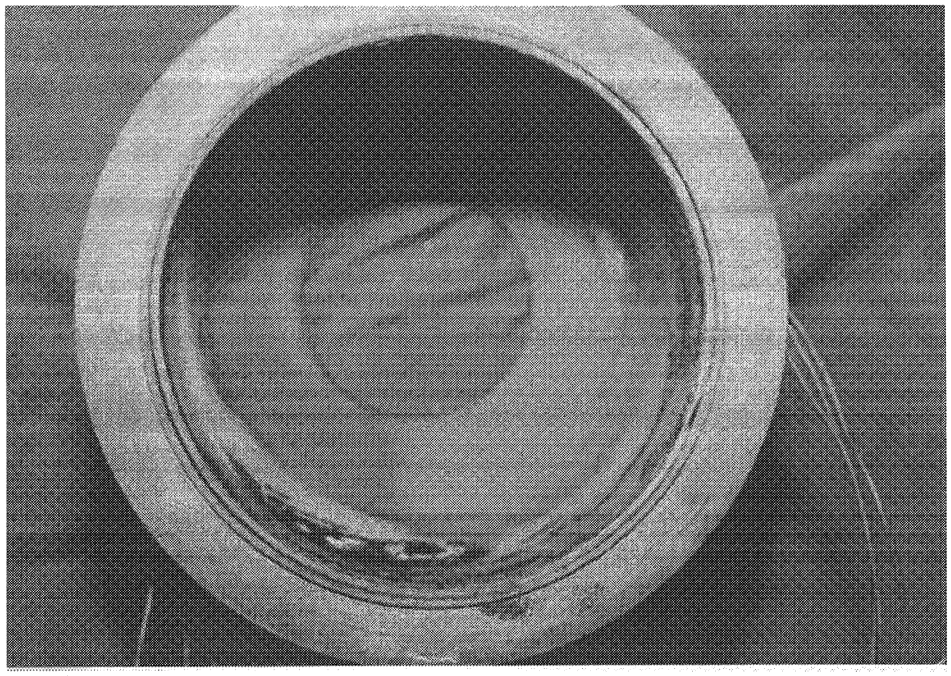

Figure V-18. Post Test View of Internal Surface of Hastelloy X Rich Zone Liner.

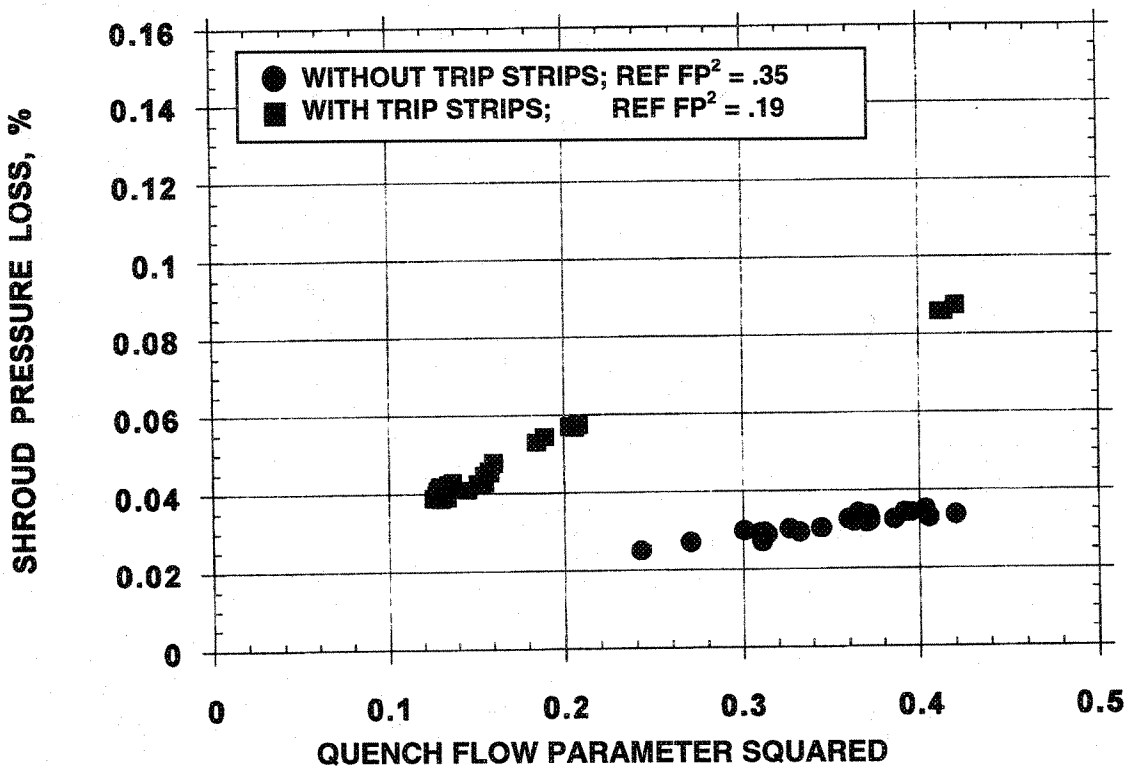

Figure V-19. Effect of Liner Trip Strips on Pressure Loss in the Cooling Jacket.

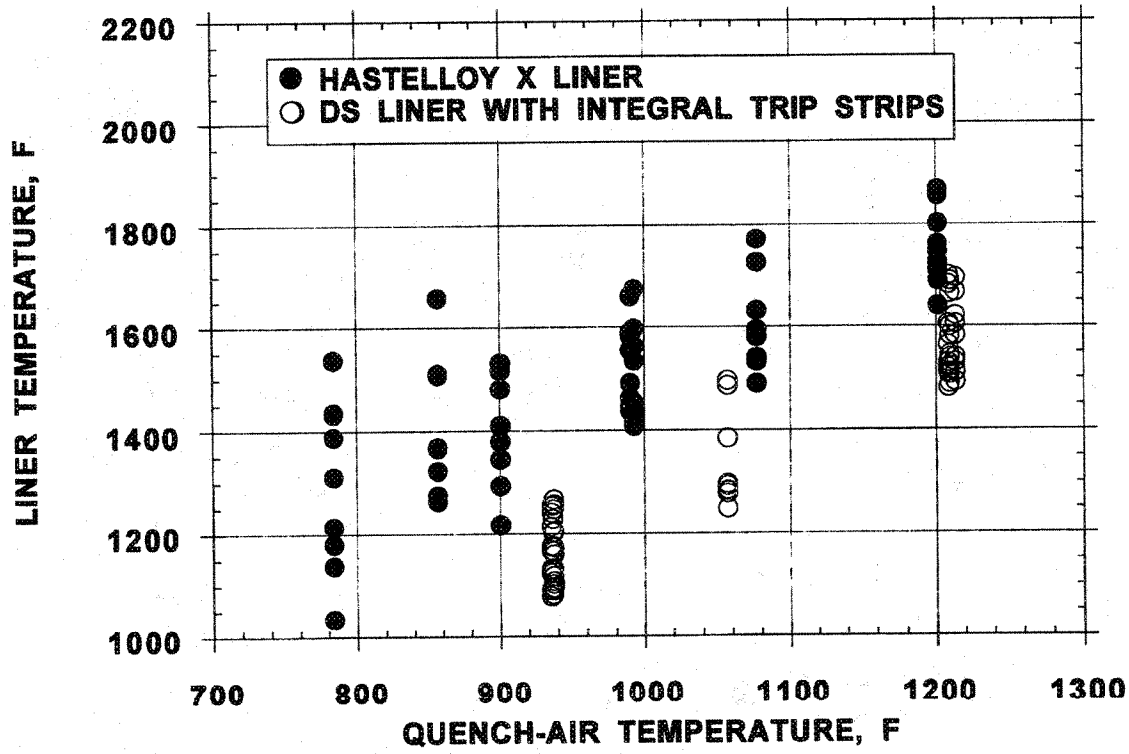

Figure V-20. Effect of Liner Trip Strips on Liner Temperatures.

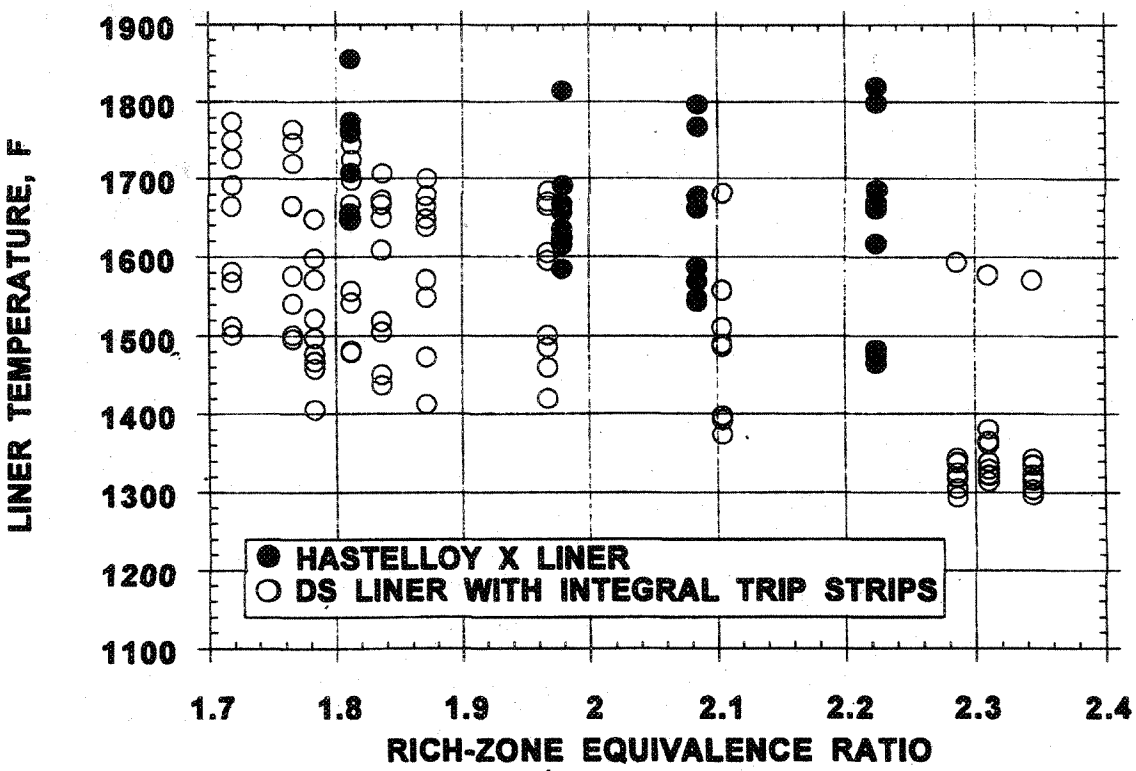

Figure V-21. Effect of Liner Trip Strips on Liner Temperatures.

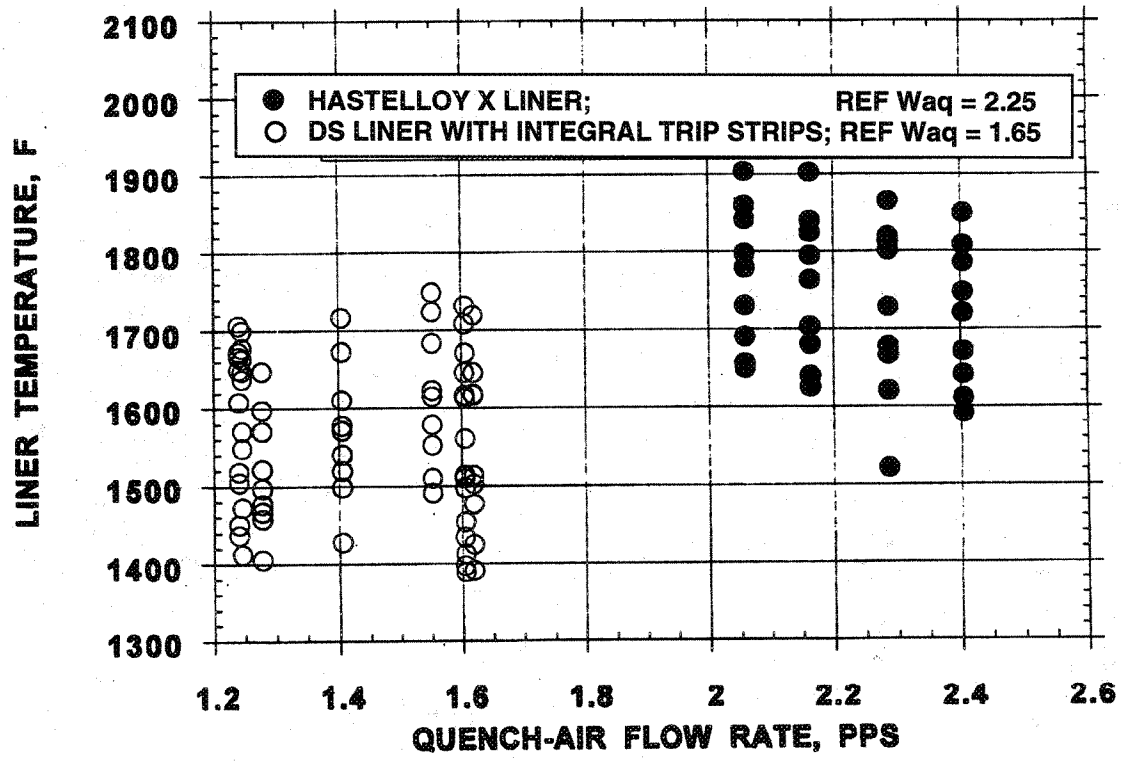

Figure V-22. Effect of Liner Trip Strips on Liner Temperatures.

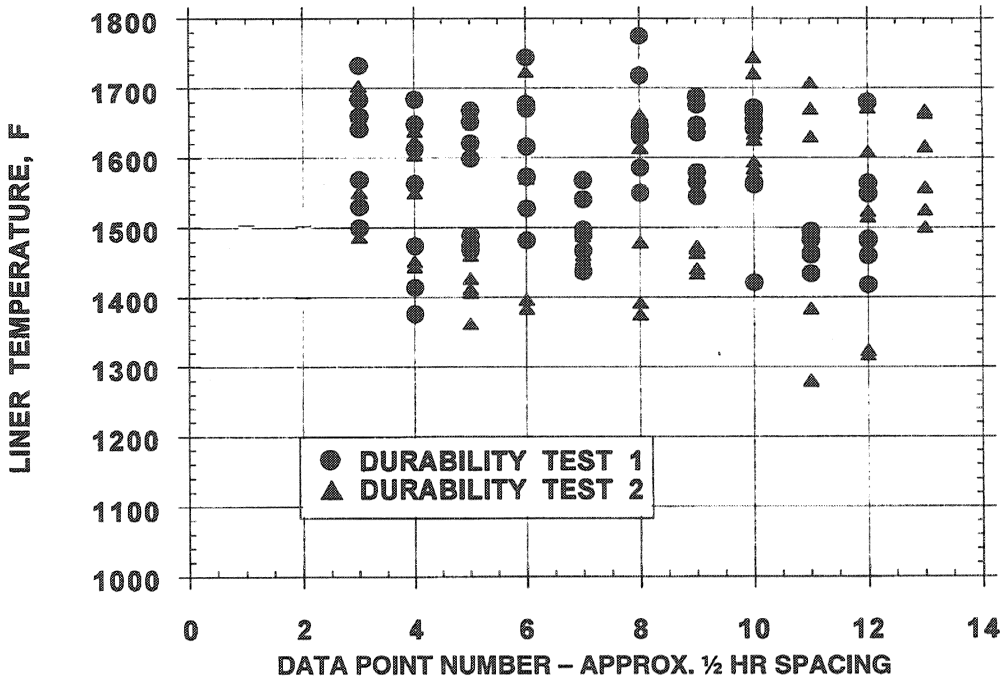

Figure V-23. Liner Temperature History During Durability Test.

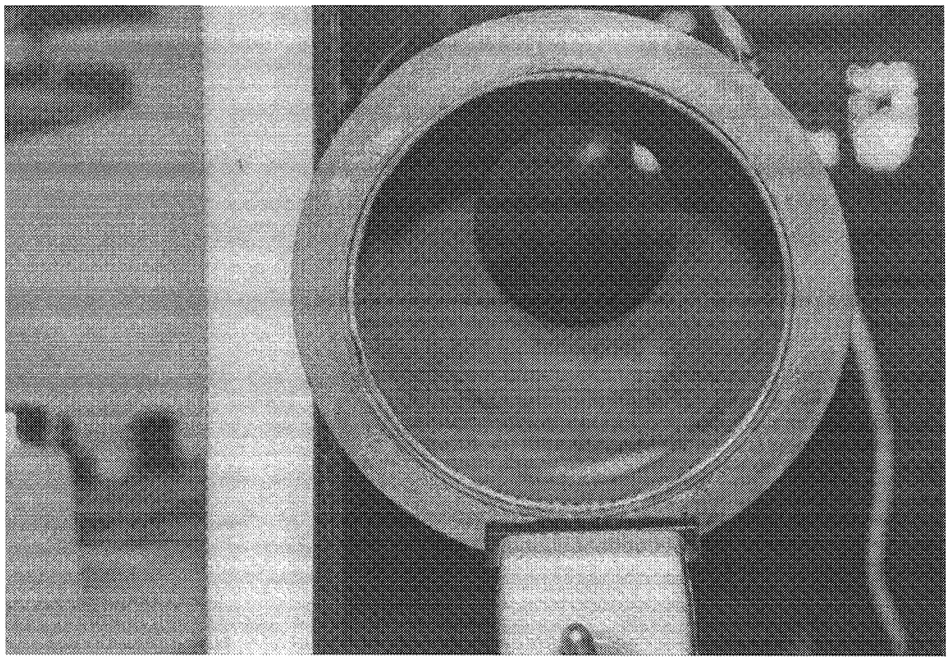

Figure V-24. Post Test View of Internal Surface of the Directionally Solidified Rich Zone Liner.

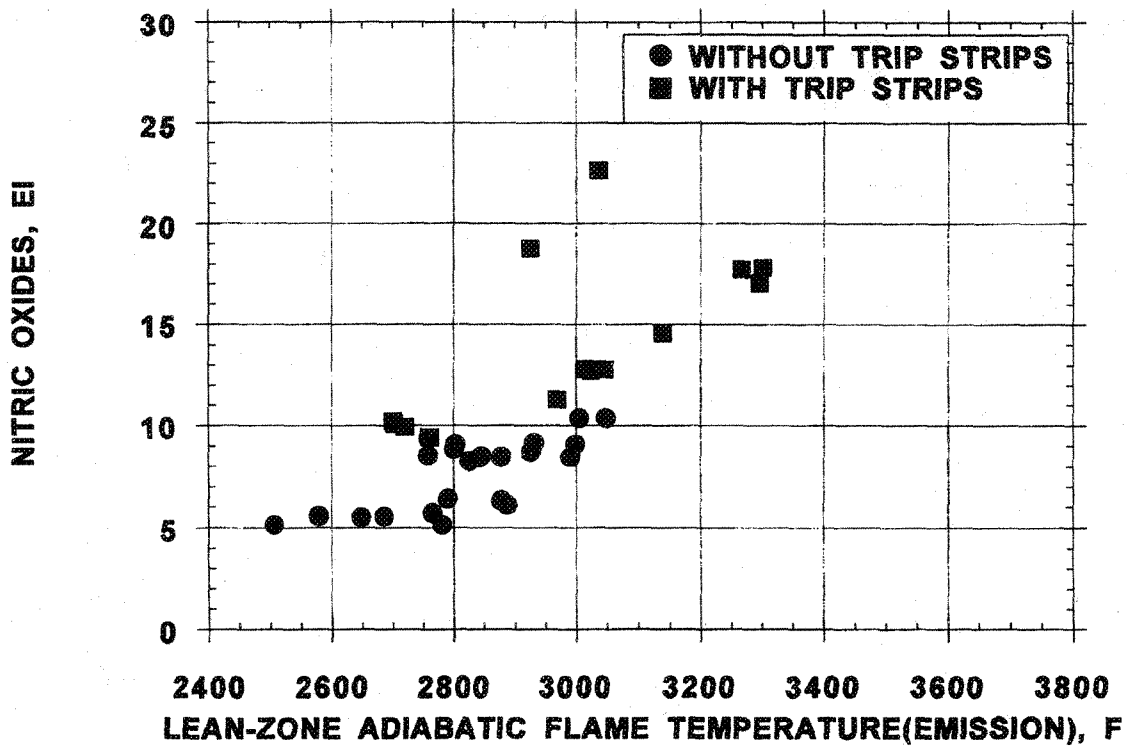

Figure V-25. Variation of NOx Emissions During Thermal Evaluations.
(P3 = 150 psia, Various: ϕ_{rich}, T3, τ_{lean}, and Splits)

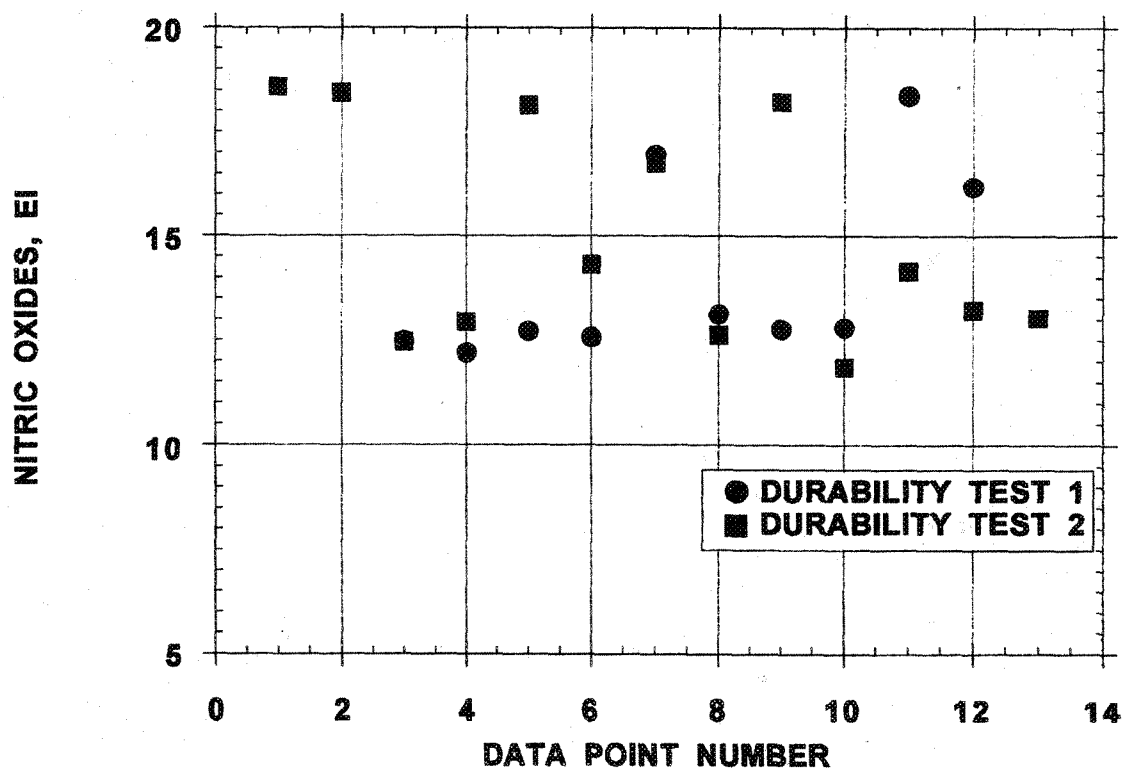

Figure V-26. Variation of NOx Emissions During Durability Test.
(T3 = 1200 F, P3 = 150 psia)

REPORT DOCUMENTATION PAGE

Form Approved
OMB No. 0704-0188

Public reporting burden for this collection of information is estimated to average 1 hour per response, including the time for reviewing instructions, searching existing data sources, gathering and maintaining the data needed, and completing and reviewing the collection of information. Send comments regarding this burden estimate or any other aspect of this collection of information, including suggestions for reducing this burden, to Washington Headquarters Services, Directorate for Information Operations and Reports, 1215 Jefferson Davis Highway, Suite 1204, Arlington, VA 22202-4302, and to the Office of Management and Budget, Paperwork Reduction Project (0704-0188), Washington, DC 20503.

1. AGENCY USE ONLY (*Leave blank*)

2. REPORT DATE
January 2005

3. REPORT TYPE AND DATES COVERED
Final Contractor Report

4. TITLE AND SUBTITLE
Large Engine Technology Program—Task 21—Rich Burn Liner for Near Term Experimental Evaluations

5. FUNDING NUMBERS
WBS–22–714–09–46
NAS3–26618

6. AUTHOR(S)
D.J. Hautman, F.C. Padget, D. Kwoka, K.S. Siskind, and R.P. Lohmann

7. PERFORMING ORGANIZATION NAME(S) AND ADDRESS(ES)
United Technologies Research Center
411 Silver Lane
East Hartford, Connecticut 06108

8. PERFORMING ORGANIZATION REPORT NUMBER
E–14650

9. SPONSORING/MONITORING AGENCY NAME(S) AND ADDRESS(ES)
National Aeronautics and Space Administration
Washington, DC 20546–0001

10. SPONSORING/MONITORING AGENCY REPORT NUMBER
NASA CR—2005-213136

11. SUPPLEMENTARY NOTES
This research was originally published internally as HSR061 in February 1999. D.J. Hautman and F.C. Padget, United Technologies Research Center, East Hartford, Connecticut 06108; D. Kwoka, K.S. Siskind, and R.P. Lohmann, Pratt & Whitney, P.O. Box 109600, West Palm Beach, Florida 33410–9600. Responsible person, Diane Chapman, Ultra-Efficient Engine Technology Program Office, NASA Glenn Research Center, organization code PA, 216–433–2309.

12a. DISTRIBUTION/AVAILABILITY STATEMENT
Unclassified - Unlimited
Subject Category: 01, 05, and 07 Distribution: Nonstandard
Available electronically at http://gltrs.grc.nasa.gov
This publication is available from the NASA Center for AeroSpace Information, 301–621–0390.

12b. DISTRIBUTION CODE

13. ABSTRACT ***(Maximum 200 words)***
The objective of the task reported herein, which was conducted as part of the NASA sponsored Large Engine Technology program, was to define and evaluate a near-term rich-zone liner construction based on currently available materials and fabrication processes for a Rich-Quench-Lean combustor. This liner must be capable of operation at the temperatures and pressures of simulated HSCT flight conditions but only needs sufficient durability for limited duration testing in combustor rigs and demonstrator engines in the near future. This must be achieved at realistic cooling airflow rates since the approach must not compromise the emissions, performance, and operability of the test combustors, relative to the product engine goals. The effort was initiated with an analytical screening of three different liner construction concepts. These included a full cylinder metallic liner and one with multiple segments of monolithic ceramic, both of which incorporated convective cooling on the external surface using combustor airflow that bypassed the rich zone. The third approach was a metallic platelet construction with internal convective cooling. These three metal liner/jacket combinations were tested in a modified version of an existing Rich-Quench-Lean combustor rig to obtain data for heat transfer model refinement and durability verification.

14. SUBJECT TERMS
High speed civil transport; Rich-Quench-Lean combustor; Combustor liner

15. NUMBER OF PAGES
61

16. PRICE CODE

17. SECURITY CLASSIFICATION OF REPORT
Unclassified

18. SECURITY CLASSIFICATION OF THIS PAGE
Unclassified

19. SECURITY CLASSIFICATION OF ABSTRACT
Unclassified

20. LIMITATION OF ABSTRACT