NASA/CR—2003-212363 93TM5

Users' Manual for Computer Code GFACE

Gas Lubricated Face Seals

Wilbur Shapiro
Mechanical Technology, Inc., Latham, New York

Restriction changed to Unclassified/Unlimited on July 27, 2005, by authority of the NASA Glenn Research Center, Structures Division.

Export Administration Regulations (EAR) Notice

This document contains information within the purview of the Export Administration Regulations (EAR), 15 CFR 730–774, and is export controlled. It may not be transferred to foreign nationals in the U.S. or abroad without specific approval of a knowledgeable NASA export control official, and/or unless an export license/license exception is obtained/available from the Bureau of Industry and Security, United States Department of Commerce. Violations of these regulations are punishable by fine, imprisonment, or both.

October 2005

The NASA STI Program Office . . . in Profile

Since its founding, NASA has been dedicated to the advancement of aeronautics and space science. The NASA Scientific and Technical Information (STI) Program Office plays a key part in helping NASA maintain this important role.

The NASA STI Program Office is operated by Langley Research Center, the Lead Center for NASA's scientific and technical information. The NASA STI Program Office provides access to the NASA STI Database, the largest collection of aeronautical and space science STI in the world. The Program Office is also NASA's institutional mechanism for disseminating the results of its research and development activities. These results are published by NASA in the NASA STI Report Series, which includes the following report types:

- TECHNICAL PUBLICATION. Reports of completed research or a major significant phase of research that present the results of NASA programs and include extensive data or theoretical analysis. Includes compilations of significant scientific and technical data and information deemed to be of continuing reference value. NASA's counterpart of peer-reviewed formal professional papers but has less stringent limitations on manuscript length and extent of graphic presentations.

- TECHNICAL MEMORANDUM. Scientific and technical findings that are preliminary or of specialized interest, e.g., quick release reports, working papers, and bibliographies that contain minimal annotation. Does not contain extensive analysis.

- CONTRACTOR REPORT. Scientific and technical findings by NASA-sponsored contractors and grantees.

- CONFERENCE PUBLICATION. Collected papers from scientific and technical conferences, symposia, seminars, or other meetings sponsored or cosponsored by NASA.

- SPECIAL PUBLICATION. Scientific, technical, or historical information from NASA programs, projects, and missions, often concerned with subjects having substantial public interest.

- TECHNICAL TRANSLATION. English-language translations of foreign scientific and technical material pertinent to NASA's mission.

Specialized services that complement the STI Program Office's diverse offerings include creating custom thesauri, building customized databases, organizing and publishing research results . . . even providing videos.

For more information about the NASA STI Program Office, see the following:

- Access the NASA STI Program Home Page at ***http://www.sti.nasa.gov***

- E-mail your question via the Internet to help@sti.nasa.gov

- Fax your question to the NASA Access Help Desk at 301–621–0134

- Telephone the NASA Access Help Desk at 301–621–0390

- Write to:
  NASA Access Help Desk
  NASA Center for AeroSpace Information
  7121 Standard Drive
  Hanover, MD 21076

NASA/CR—2003-212363 93TM5

Users' Manual for Computer Code GFACE

Gas Lubricated Face Seals

Wilbur Shapiro
Mechanical Technology, Inc., Latham, New York

Restriction changed to Unclassified/Unlimited on July 27, 2005, by authority of the NASA Glenn Research Center, Structures Division.

Export Administration Regulations (EAR) Notice

This document contains information within the purview of the Export Administration Regulations (EAR), 15 CFR 730–774, and is export controlled. It may not be transferred to foreign nationals in the U.S. or abroad without specific approval of a knowledgeable NASA export control official, and/or unless an export license/license exception is obtained/available from the Bureau of Industry and Security, United States Department of Commerce. Violations of these regulations are punishable by fine, imprisonment, or both.

Prepared under Contract NAS3–25644

National Aeronautics and
Space Administration

Glenn Research Center

October 2005

Document History

The source and executable files for the CFD Seal Analysis Industrial Codes, of which this is a part, were released as LEW–16582 in 1998. This report was originally published by Mechanical Technology, Inc., in June 1993.

Document Availability Change Notice

NASA/CR—2003-212363

Users' Manual for Computer Code GFACE Gas Lubricated Face Seals

Wilbur Shapiro

This document was published in July 2003 with the restriction Export Administration Regulations (EAR). It was changed to Unclassified/Unlimited July 27, 2005, by authority of the NASA Glenn Research Center, Structures Division.

Per the STI Program Office and Code I at Headquarters, you may modify copies in your possession. The restriction notice on the cover, title page, and Report Documentation Page should be boldly crossed out and the above statement printed clearly above or below it.

Trade names or manufacturers' names are used in this report for identification only. This usage does not constitute an official endorsement, either expressed or implied, by the National Aeronautics and Space Administration.

This work was sponsored by the Low Emissions Alternative Power Project of the Vehicle Systems Program at the NASA Glenn Research Center.

Available from

NASA Center for Aerospace Information
7121 Standard Drive
Hanover, MD 21076

National Technical Information Service
5285 Port Royal Road
Springfield, VA 22100

Available electronically at http://gltrs.grc.nasa.gov

TABLE OF CONTENTS

SECTION		PAGE
	LIST OF FIGURES	v
	LIST OF TABLES	viii
	NOMENCLATURE	ix
1.0	INTRODUCTION	1
2.0	THEORETICAL DESCRIPTION AND NUMERICAL METHODS	5
	2.1 Governing Equations	5
	2.2 Formation of Equations for Determining Press.Dist.	5
	2.3 Column Method Solution of Newton-Raphson Equation	11
	2.4 Film Thickness Distribution and Misalignment	16
	2.5 Power Loss (Torque)	16
	2.6 Computation of Bearing Flows	20
3.0	PROGRAM ORGANIZATION	26
	3.1 Overall Organization	26
	3.2 Block 1 - Input and Initialization	28
	3.3 Block 2 - Determination of Press.Dist., etc	28
	3.4 Block 3 - Output Routines	31
	3.5 Miscellaneous Routines	31
4.0	PROGRAM INPUT	34
	4.1 Input Description	34
5.0	SAMPLE PROBLEMS	49
	5.1 Multi-Pad Rayleigh Step Seal	49

TABLE OF CONTENTS (Cont.)

SECTION		PAGE
	5.2 Tapered Land Seal	73
	5.3 Tapered Land Seal Using Constant Press. Regions	86
	5.4 Hydrostatic Recess Seal	93
	5.5 Recess Seal Using Pad Option	117
	5.6 Inherently Compensated Hydrostatic Seal	120
	5.7 Radial Taper Seal	164
6.0	VERIFICATION	179
	6.1 Tilted Slider	179
	6.2 Ausman Rayleigh-Step Analysis	187
	6.3 Internal Verification	188
7.0	OPERATING ENVIRONMENT	204
8.0	ERROR AND STATUS MESSAGES	205

LIST OF FIGURES

FIGURE		PAGE
1-1	GFACE Configurations	2
1-2	Polar Grid Mesh System	3
2-1	Coordinate System for GFACE	6
2-2	Flow-Balance Cell and Associated Grid Network	7
2-3	Flow-Balance Across Cell	9
2-4	Non-Uniform Clearance Geometries	17
2-5	Viscous Power Loss, Mathematical Model	18
2-6	Flow Across Circumferential Line	21
2-7	Flow Across Axial Line	23
3-1	Overall Program Organization	27
3-2	Block 1	29
3-3	Block 2	30
3-4	Block 3	32
4-1	Two Types of Radially Tapered-Land Face Seals	40
5-1	Sample Problem 1, Rayleigh-Step Seal, Input File	51
5-2	Sample Problem 1, Rayleigh-Step Seal, Output File	52
5-3	Sample Problem 1, Rayleigh-Step Seal, Clearance Dist.	70
5-4	Sample Problem 1, Rayleigh-Step Seal, Pressure Dist.	71
5-5	Sample Problem 1, Rayleigh-Step Seal, Press.Dist.at Radius	72
5-6	Sample Problem 2, Tapered Land Seal, Grid Regions	74
5-7	Sample Problem 2, Tapered Land Seal, Grid Pt. Input	76

LIST OF FIGURES (Cont.)

FIGURE		PAGE
5-8	Sample Problem 2, Tapered Land Seal, Grid Pt. Output	78
5-9	Sample Problem 2, Tapered Land Seal, Clearance Dist.	84
5-10	Sample Problem 2, Tapered Land Seal, Pressure Dist.	85
5-11	Sample Problem 3, Tapered Land Seal, Input	87
5-12	Sample Problem 3, Tapered Land Seal, Output	88
5-13	Sample Problem 4, Four Recess Seal Config.	94
5-14	Sample Problem 4, Four Recess Seal, Input	95
5-15	Sample Problem 4, Four Recess Seal, Output	96
5-16	Sample Problem 4, Four Recess Seal, Clearance Dist.	115
5-17	Sample Problem 4, Four Recess Seal, Pressure Dist.	116
5-18	Sample Problem 4, Four Recess Seal, Pressure Dist. R/L	118
5-19	Sample Problem 5, Recess Seal Using Pad Option, Input	119
5-20	Sample Problem 5, Recess Seal Using Pad Option, Output	121
5-21	Sample Problem 6, Inherently Comp. Seal, Input File	144
5-22	Sample Problem 6, Inherently Comp. Seal, Output File	145
5-23	Sample Problem 6, Inherently Comp. Seal, Clearance Dist.	161
5-24	Sample Problem 6, Inherently Comp. Seal, Pressure Dist.	162
5-25	Sample Problem 6, Inherently Comp. Seal, Press.Dist. @Rad.	163
5-26	Sample Problem 7, Radial Tapered Seal, Input File	165
5-27	Sample Problem 7, Radial Tapered Seal, Output File	166

LIST OF FIGURES (Cont.)

FIGURE		PAGE
5-28	Sample Problem 7, Radial Tapered Seal, Clearance Dist.	177
5-29	Sample Problem 7, Radial Tapered Seal, Pressure Dist.	178
6-1	Check Case With Etsion and Fleming, Input File	181
6-2	Check Case With Etsion and Fleming, Output File	182
6-3	Validation, Step Pad, Load vs. Step Height	189
6-4	Validation, Step Pad, Load/Power vs. Step Height	190
6-5	Flow Validation, Recess Seal, Input File	191
6-6	Flow Validation, Recess Seal, Output File	192
6-7	Stiffness Verification, Rayleigh-Step Pad, Input File	198
6-8	Stiffness Verification, Rayleigh-Step Pad, Output File	199

LIST OF TABLES

NUMBER		PAGE
6-1	Comparison of GFACE With Etsion & Fleming Load Capacity	179
6-2	Comparison of GFACE With Etsion & Fleming Power Loss	180
6-3	GFACE Comparison With Ausman Rayleigh-Step Pad	187
6-4	Forces & Moments as Function of Displacement	197
6-5	Stiff. Comparisons Between Automatic & Manual Comp.Values	203

NOMENCLATURE

C_d	inherently compensated orifice coefficient of discharge
C_o	reference clearance
d_o	orifice diameter
F_f	viscous friction force
FF	dimensionless viscous friction force = $F_f/(p_oC_oR)$
G_C	universal gas constant
h	local film thickness
H	dimensionless film thickness = h/C_o
N	number of orifices in a row
p	pressure
P_o	reference pressure
P	dimensionless pressure = p/p_o
P'	absolute dimensionless pressure = P + 1
P_{CR}	critical pressure ratio
P_R	orifice downstream pressure
P_S	supply pressure upstream of orifice
q	mass flow
R	journal radius
r	orifice hole radius
r_i	inner radius
r_o	outer radius
S_c	source correction factor
t	time
t_o	reference time = $\dfrac{12\mu R^2}{P_oC_o^2}$
T	dimensionless time = t/t_o
T_a	absolute temperature

T_f	viscous friction torque
T_F	dimensionless viscous friction torque = $T_f/(p_o C_o R^2)$
U	journal surface velocity
z	axial direction coordinate
Z	dimensionless axial coordinate = z/R
α	misalignment angle about x-x axis
β	misalignment angle about y-y axis
Υ	ratio of specific heats
Θ	angular direction (direction of sliding)
Θ_p	angular extent of pad
Λ	compressibility parameter = $\dfrac{6\mu\omega r_o^2}{P_o C_o^2}$
μ	absolute viscosity
ω	rotating speed

1.0 INTRODUCTION

The program GFACE (acronym for gas lubricated face) is used for a variety of seals that can be defined in a polar coordinate reference frame. Figure 1-1 shows typical configurations that the program analyzes. The capabilities of the program include the following:

- Varying geometries as indicated on Fig. 1-1
- Variable or constant grid representation. Maximum grid size is 51 grid points in the radial direction and 361 grid points in the circumferential direction. Figure 1-2 shows a typical grid network. The circumferential variable is θ and the radial variable is R. The grid points are identified in the radial direction as I and in the circumferential direction as J. The extent of I is $1 \rightarrow M$, and the extent of J is $1 \rightarrow N$.
- Specified boundary pressures or circumferential periodic boundaries.
- Axial symmetry option.
- Three degrees of freedom; axial, z translation and α and β rotations about the x and y axes through the rotor origin.
- Determining load as a function of shaft position or determining shaft position to satisfy a given load.
- External pressurization (hydrostatic) of inherently compensated orifices, spot recesses or full recesses.
- Choice of English or SI units.

The output of the program includes:

- Clearance distribution
- Pressure distribution
- Leakage along specified flow paths
- Load Capacity
- Righting Moments

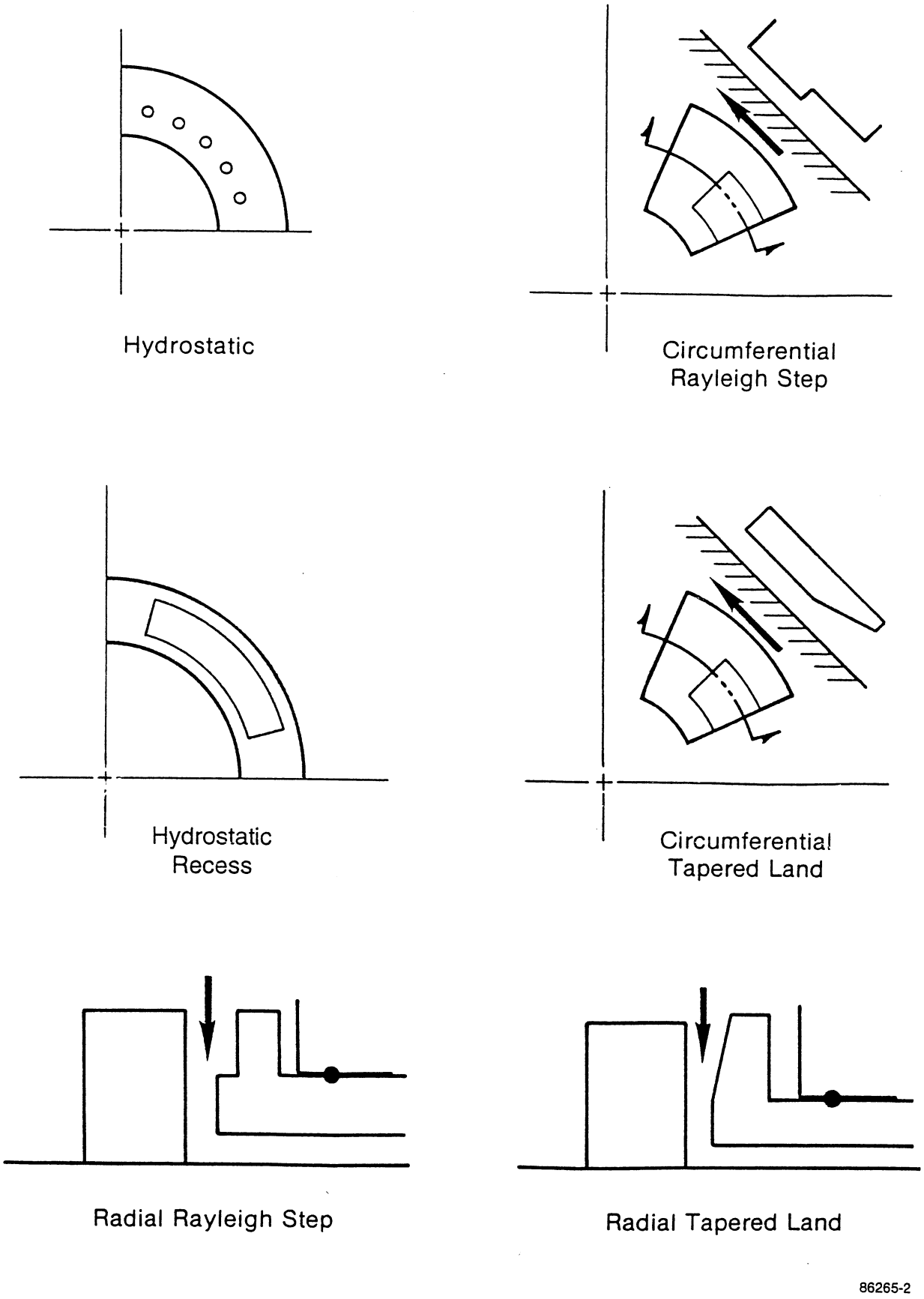

Figure 1-1 GFACE Configurations

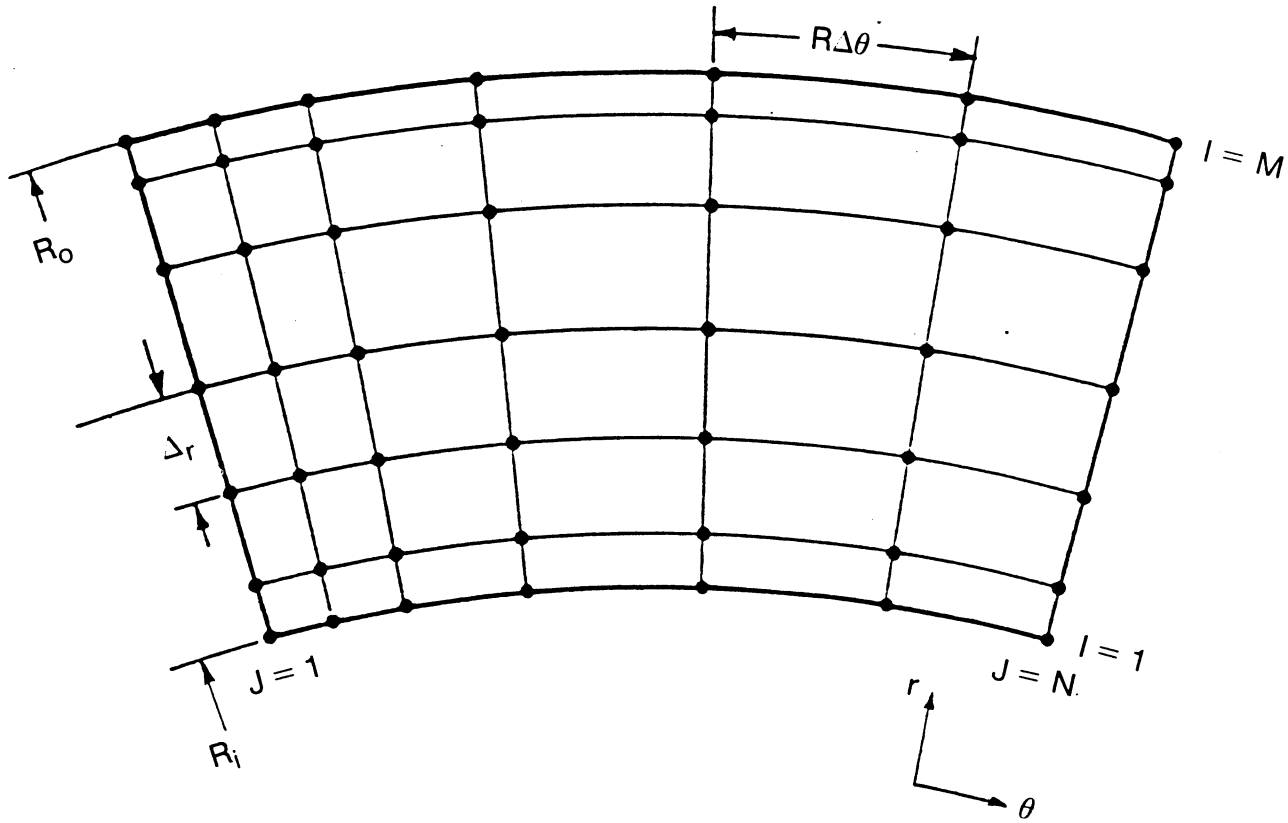

Figure 1-2 Polar Grid Mesh System

- Viscous dissipation
- Cross-coupled, frequency dependent, stiffness and damping coefficients
- Plotting routines for the pressure and clearance distribution

The program has been written for a PC environment using OS/2 as the operating system. Large dimensions have been incorporated which makes the program too large for DOS. The FORTRAN code is transferable to other systems that compile FORTRAN 77, provided RAM is sufficient.

2.0 THEORETICAL DESCRIPTION AND NUMERICAL METHODS

2.1 Governing Equations

Reynolds lubrication equation for compressible flow in polar coordinates is as follows:

$$\frac{\partial}{\partial r}\left(\frac{r\rho h^3}{\mu}\frac{\partial p}{\partial r}\right)+\frac{1}{r}\frac{\partial p}{\partial \theta}\left(\frac{\rho h^3}{\mu}\frac{\partial p}{\partial \theta}\right)=6U\frac{\partial(\rho h)}{\partial \theta}+12r\rho\frac{\partial h}{\partial t} \tag{2-1}$$

The coordinate system used is shown on Fig. 2-1

The equation is made dimensionless with the following definitions. (Upper case variables are dimensionless).

$$R=\frac{r}{r_o};\quad H=\frac{h}{C_o};\quad T=\frac{t}{t_o};\quad P=\frac{p}{p_o}$$

$$\Lambda=\frac{6\mu\omega r_o^2}{p_o C_O^2};\quad t_o=\frac{12\mu r_o^2}{p_o C_O^2} \tag{2-2}$$

Substituting the dimensionless variables into Reynolds equation produces a dimensionless Reynolds equation:

$$\frac{\partial}{\partial R}\left(RPH^3\frac{\partial P}{\partial R}\right)+\frac{1}{R}\frac{\partial}{\partial \theta}\left(PH^3\frac{\partial P}{\partial \theta}\right)=\Lambda\frac{\partial(PH)}{\partial \theta}+\frac{\partial(PH)}{\partial T} \tag{2-3}$$

For steady-state solutions, the time dependent term on the right hand side is eliminated.

In the solution methods subsequently described, the Reynolds equation is not applied directly. The Reynolds equation represents the divergence of the mass flow at any point. The more convenient cell method conducts a mass balance directly.

2.2 Formation of Equations for Determining Pressure Distribution

The general method for solving for the pressure distribution is the cell method[1], whereby a flow balance through a cell volume is accomplished. The perimeter of the cell extends halfway between the grid point and its four neighboring points. A typical cell is shown by the dashed lines in Fig. 2-2 . The principal grid point is at row i (radial direction) and

[1]Castelli, V. and J. Pirvics, "Review of Methods in Gas Bearing Film Analysis", Trans. ASME, *J. Lubr. Technology*, October 1968, pp 777-792.

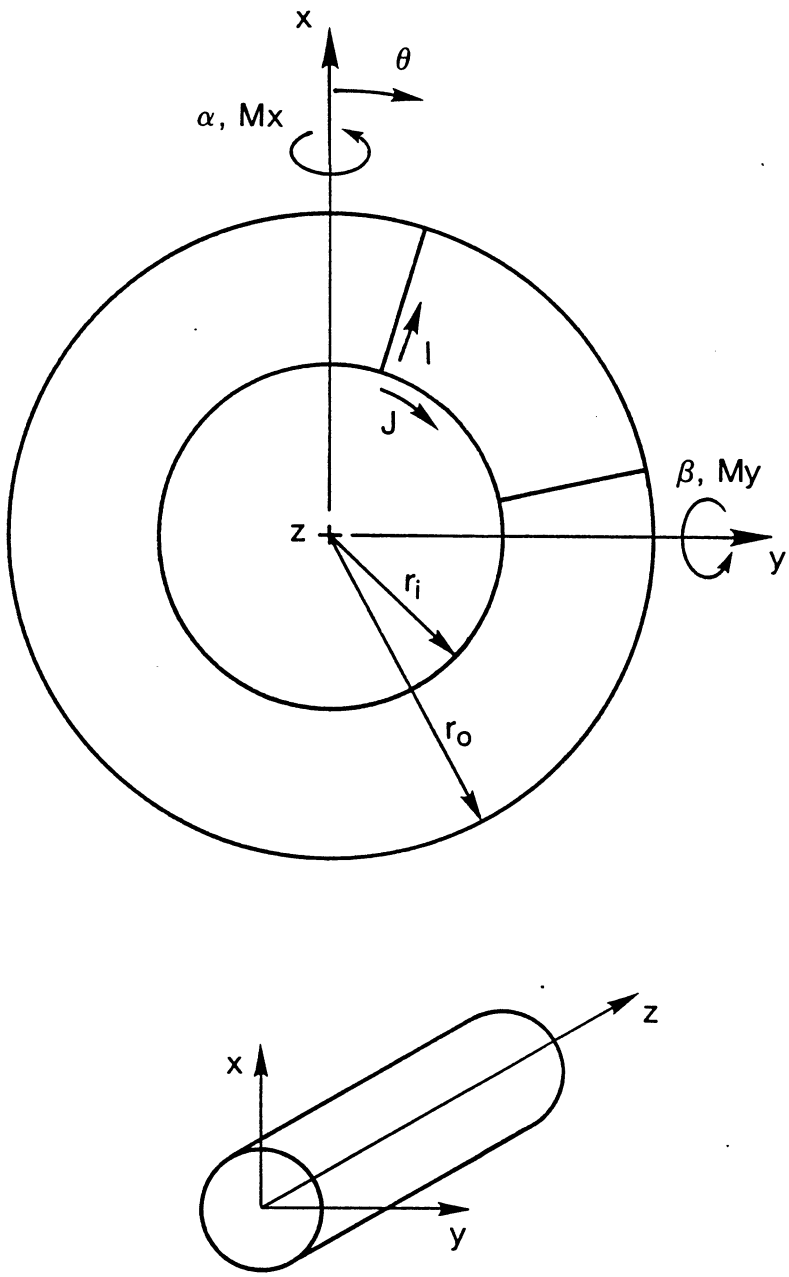

Figure 2-1 Coordinate System for GFACE

87906

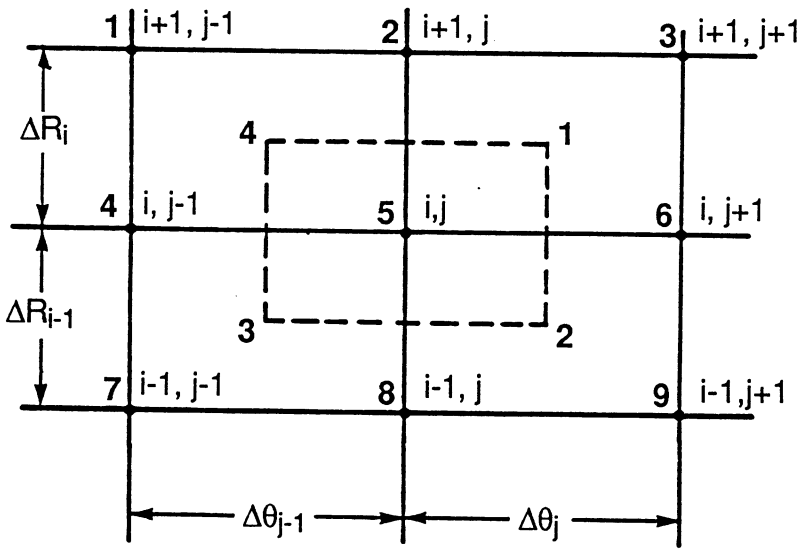

Figure 2-2 Flow-Balance Cell and Associated Grid Network

861588-1

column j (circumferential direction). For convenience of programming the grid points are numbered for each cell sequentially from 1 to 9 with grid point 5 being the principal point. The corners of the cell boundaries are also numbered from 1 to 4.

Figure 2-3 shows the flow balance through the cell. There are eight flows across the cell boundaries, and there can also be a source (or sink) flow into or out of the cell control volume. The reason eight flows are used in lieu of four is that it permits discontinuous clearance boundaries at grid lines (such as a Rayleigh step) without taking derivatives across a discontinuous boundary.

The net flow through a cell can be expressed as:

$$\begin{aligned} &Q_{12}^{+}\frac{\Delta R_i}{2}+Q_{12}^{-}\frac{\Delta R_{i-1}}{2}+Q_{14}^{+}\frac{\Delta\theta_j}{2}+Q_{14}^{-}\frac{\Delta\theta_{j-1}}{2} \\ &-Q_{34}^{+}\frac{\Delta R_i}{2}-Q_{34}^{-}\frac{\Delta R_{i-1}}{2}-Q_{23}^{+}\frac{\Delta\theta_j}{2}-Q_{23}^{-}\frac{\Delta\theta_{j-1}}{2}=Q_{in} \end{aligned} \tag{2-4}$$

$Q^{+}{}_{12}$ means the mass flow per unit length across the plus side of cell boundary 1-2, etc.

The Q's are dimensionless mass flows per unit length, except for Q_{in} which is a dimensionless source inlet flow.

In the θ direction

$$Q=-\frac{PH^3}{R}\frac{\partial P}{\partial\theta}\frac{\Delta R}{2}+\Lambda RPH\frac{\Delta H}{2} \tag{2-5}$$

$$Q=\frac{PH^3}{R}\frac{\partial P}{\partial R}\frac{\Delta R}{2} \tag{2-6}$$

where Q is defined as

$$Q=\frac{12\mu G_c T_a q}{p_a^2 C^3} \tag{2-7}$$

Pressures are taken as the average pressure across the boundary. For example;

$$P_{12}=\frac{P_{ij}+P_{ij+1}}{2} \quad \text{and} \tag{2-8}$$

$$\left.\frac{\partial P}{\partial\theta}\right|_{12}=\frac{P_{ij+1}-P_{ij}}{\Delta\theta_j} \tag{2-9}$$

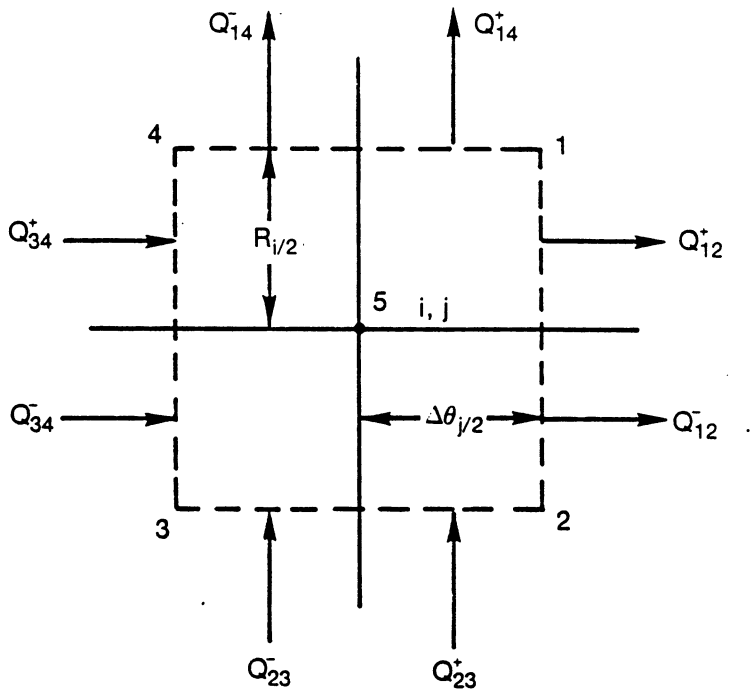

Figure 2-3 Flow-Balance Across Cell

861587-1

An optional flow can enter the cell from an external source. The orifice discharge can enter directly into the clearance (inherent compensation), in which case the orifice area is considered as the surface area of a cylinder of fluid in the clearance space, and is thus a function of the clearance. Alternatively, the orifice can discharge into a recessed volume, in which case the hole area applies.

$$Q_{in} = (OFC)(A_o)P_s'\left(\left(\frac{P_R'}{P_s'}\right)^{2/\gamma}\left[1-\left(\frac{P_R'}{P_s'}\right)^{\frac{\gamma-1}{\gamma}}\right]\right)^{1/2} \tag{2-10}$$

where,

$$OFC = \frac{12\mu C_d}{p_o C_o^2}\sqrt{\frac{2\gamma G_c T_a}{\gamma-1}} \tag{2-11}$$

$$A_o = \pi d_o H_5 \quad for \quad inherent \quad compensation$$

$$A_o = \frac{\pi d_o^2}{4} \quad for \quad orifice \quad compensation \tag{2-12}$$

$$If\left(\frac{P_R'}{P_s'}\right) \le P_{cr} \quad then\left(\frac{P_R'}{P_s'}\right) = P_{cr} \tag{2-13}$$

$$\text{where } P_{cr} = \left(\frac{2}{\gamma+1}\right)\left(\frac{\gamma}{\gamma-1}\right) \tag{2-14}$$

$$\text{Also, if}\left(\frac{P_R'}{P_s'}\right) \ge 1.0, \quad \left(\frac{P_R'}{P_s'}\right) = \frac{1}{\left(\frac{P_R'}{P_s'}\right)} and P_s' = P_R' \tag{2-15}$$

This condition implies back flow through the orifice.

The primed values indicate absolute pressure (i.e. $P_r' = P_r + 1$).

Thus, a system of numerical equations can be derived as a function of five pressures. There is an equation for every grid point.

$$f(P_1, P_2, \ldots P_5)_{ij} = 0 \tag{2-16}$$

The system is non-linear since it is dependent upon multiples of P and its derivatives.

The solution process starts by assuming a pressure distribution, and using Newton-Raphson iteration until the functions f converge to zero within a pre specified truncation error. In equation form the iteration process is ;

$$f_{ij}^{old} + \sum_{k=1}^{5} \frac{\partial f_{ij}^{old}}{\partial P_k}\left(P_k^{new} - P_k^{old}\right) = 0 \tag{2-17}$$

where the partial derivatives are explicitly determined, e.g.

$$\frac{\partial f_{ij}}{\partial P_k} = \frac{f\left(P_1, P_2 \ldots P_k + \varepsilon/2 \cdots P_5\right)_{ij} - f\left(P_1, P_2 \ldots P_k - \varepsilon/2 \cdots P_5\right)_{ij}}{\varepsilon} \tag{2-18}$$

The actual convergence is not on f but on $P_k^{(new)}$-$P_k^{(old)}$, for when the difference vanishes, the condition that $f=0$, is satisfied.

The subroutine QSUM computes the mass flow residues at each cell from equation (2-3). The subroutine PD computes the partial derivatives of the flow residue. It calls QSUM with pressures sequentially incremented to establish partial derivatives.

2.3 The Column Method Solution of Newton-Raphson Equations

The column method[2] is used to solve the new pressures in the set of MXN equations defined by equation (2-17).

The linearized N-R equations may be written in the form:

$$C_j P_j + E_j P_{j-1} + D_j P_{j+1} = R_j \tag{2-19}$$

For each value of j, P_j is a vector containing the jth column of new pressures, R_j is the right hand side column vector and C_j, E_j and D_j are in general tri-diagonal matrices.

Case 1- Pressure Prescribed at Boundaries

Equations of form (2-19) are written at all points in the grid corresponding to i=1,2→M and j=2,3,→N-1 with boundary column vectors P_1 and P_N prescribed. The solution is of the form:

$$P_{j-1} = A_j P_j + B_j \tag{2-20}$$

[2]Castelli, V. and W. Shapiro, "Improved Method of Numerical Solution of the General Incompressible Fluid-Film Lubrication Problem", Trans. ASME, *J. Lubr. Technology.*,April 1967, pp 211-218

A_j is an MXM matrix and B_j is a vector with M rows. Substitute equation (2-20) into equation (2-19) to eliminate P_{j-1}. The resulting equation becomes:

$$\left(C_j + E_j A_j\right)P_j + E_j B_j + D_j P_{j+1} = R_j \tag{2-21}$$

Solve equation (2-21) for P_j to obtain:

$$P_j = -I_j D_j P_{j+1} + I_j\left(R_j - E_j B_j\right) \tag{2-22}$$

where $I_j = \left(C_j + E_j A_j\right)^{-1}$ $\quad$ $(MxM\ matrix)$

Set $j=j+1$ in equation (2-20) to obtain

$$P_j = A_{j+1} P_{j+1} + B_{j+1} \tag{2-23}$$

Compare coefficients in equations (2-22) and (2-23) to obtain:

$$A_{j+1} = -I_j P_j; \quad B_{j+1} = I_j (R_j - E_j B_j) \tag{2-24}$$

Set $A_2=0$, $B_2=P_1$

Use equation (2-24) to compute $A_3, A_4 \ldots, A_N$ and $B_3, B_4 \ldots B_N$

Since P_N is given and all A_j and B_j are computed, we may use equation (2-20) to compute $P_{N-1}, P_{N-2}, P_{N-3}, \ldots, P_2$.

Review of General Procedure for Non-Periodic Boundaries

1) Set $A_2 = 0$; $P_2 = P_1$

2) Compute A_{j+1} B_{j+1}

$A_{j+1}=-I_j D_j$
$B_{j+1} = I_j(R_j - E_j B_j)$ $\qquad$ $j=2 \rightarrow N-1$

where $I_j=(C_j+E_j A_j)^{-1}$

3) Compute P_j by $\quad P_{j-1}=A_j P_j + B_j \qquad j = N \rightarrow 2$

Case 2 - Column Method for Periodic Boundaries

P_j, B_j, R_j, Z_j are vectors; $N' = N - 1$

For periodic boundaries, the condition is that $P_1 = P_N$. At the boundary, j=1, the general equation is:

$$C_1 P_1 + E_1 P_{N'} + D_1 P_2 = R_1 \tag{2-25}$$

At column N', the equation becomes

$$C_{N'} P_{N'} + E_{N'} P_{N'-1} + D_N P_1 = R_{N'} \tag{2-26}$$

To satisfy the boundary conditions, a solution is assumed of the form:

$$P_{j-1} = A_j P_j + B_j + F_j P_{N'} \tag{2-27}$$

$$A_1 = 0, B_1 = 0, F_1 = \delta(\textit{Kronecker delta matrix}) \tag{2-28}$$

Returning to the general equation:

$$C_j P_j + E_j P_{j-1} + D_j P_{j+1} = R_j \tag{2-29}$$

Substituting for P_{j-1} from equation (2-27), the following results:

$$(C_j + E_j A_j) P_j + E_j B_j + E_j F_j P_{N'} + D_j P_{j+1} = R_j \tag{2-30}$$

Let $I_j = (C_j + E_j)^{-1}$ (2-31)

Then,

$$P_j = -I_j D_j P_{j+1} + I_j (R_j - E_j B_j) - I_j E_j F_j P_{N'} \tag{2-32}$$

From equation (2-27):

$$P_j = A_{j+1} P_{j+1} + B_{j+1} + F_{j+1} P_{N'} \tag{2-33}$$

Comparing equations (2-32) and (2-33):

$$A_{j+1} = -I_j D_j, \quad B_{j+1} = I_j (R_j - E_j B_j), \quad F_{j+1} = -I_j E_j F_j \quad j = 1 \cdots N-1 \tag{2-34}$$

For $P_N = P_1$, we obtain from equation (2-27):

$$P_{N'} = A_{N'+1} P_1 = B_{N'+1} + F_{N'+1} P_{N'} \tag{2-35}$$

After rearranging:

$$P_{N'} = (\delta - F_{N'+1})^{-1}(A_{N'+1}P_1 + B_{N'+1}) \tag{2-36}$$

$$\text{or} \quad P_{N'} = Y_{N'}P_1 + Z_{N'} \tag{2-37}$$

where

$$Y_{N'} = (\delta - F_{N'+1})^{-1} A_{N'+1}, \quad Z_{N'} = (\delta - F_{N'+1})^{-1} B_{N'+1} \tag{2-38}$$

Substituting equation (2-37) into (2-27) we obtain:

$$\begin{aligned} P_{N'-1} &= A_{N'}{}'(Y_{N'}P_1 + Z_{N'}) + B_{N'} + F_{N'}(Y_{N'}P_1 + Z_{N'}) \\ &= (A_{N'}Y_{N'-1} + F_{N'}Y_{N'})P_1 + A_{N'}Z_{N'-1} + B_{N'} + F_{N'}Z_{N'} \end{aligned} \tag{2-39}$$

$$\begin{aligned} &= Y_{N'-1}P_1 + Z_{N'-1} \\ &\textit{where} \\ &Y_{N'-1} = A_{N'}Y_{N'} + F_{N'}Y_{N'}, \quad Z_{N'-1} = A_{N'}Z_{N'} + B_{N'} + F_{N'}Z_{N'} \end{aligned} \tag{2-40}$$

$$\begin{aligned} P_{N'-2} &= A_{N'-1}{}'(Y_{N'-1}P_1 + Z_{N'-1}) + B_{N'-1} + F_{N'-1}(Y_{N'1}P_1 + Z_{N'}) \\ &= (A_{N'-1}Y_{N'-1} + F_{N-1'}Y_{N'})P_1 + A_{N'-1}Z_{N'-1} + B_{N'-1} + F_{N'-1}Z_{N'} \end{aligned} \tag{2-41}$$

$$= Y_{N'-2}P_1 + Z_{N'-2} \tag{2-42}$$

Therefore in general,

$$\begin{aligned} Y_{j-1} &= A_jY_j + F_jY_{N'} \\ Z_{j-1} &= A_jZ_j + B_j + F_jZ_{N'} \end{aligned} \tag{2-43}$$

and

$$P_{j-1} = Y_{j-1}P_1 + Z_{j-1} \quad or, \quad P_j = Y_jP_1 + Z_j \tag{2-44}$$

$$P_1 = (\delta - Y_1)^{-1} Z_1 \tag{2-45}$$

<u>Review of General Procedure for Joined or Periodic Boundaries</u>

1) *Compute* $A_{j+1}, B_{j+1}, F_{j+1}$

$A_{j+1} = -I_jD_j$

$B_{j+1} = I_j(R_j - E_jB_j) \quad j = 1, N-1$

$F_{j+1} = -I_jE_jF_j$

$$A_1 = 0 \qquad I_j = \left(C_j + E_j A_j\right)^{-1}$$
$$B_1 = 0$$
$$F_1 = \delta$$

2) *Compute* $Y_{N'}$, $Z_{N'}$

$$Y_{N'} = \left(\delta - F_N\right)^{-1} A_N$$
$$Z_{N'} = \left(\delta - F_N\right)^{-1} B_N$$

3) *Compute*

$$Y_{j-1} = A_j Y_j + F_j Y_{N'} \qquad j = N' \rightarrow 2$$
$$Z_{j-1} = A_j Z_j + B_j + F_j Z_{N'}$$

4) *Compute* $P_1 = \left(\delta - Y_1\right)^{-1} Z_1$

5) *Compute* $P_j = Y_j P_1 + Z_j \qquad j = 2 \rightarrow N'$

Coefficient Matrices

The Coefficient matrices C_j, E_j, and D_j and the right hand side vector R_j, are easily formulated. C_j contains all the coefficients multiplied by Pj. By examining equation (2-17), it is seen that for any row i and column j, the values of C are:

$$C_{i,i-1,j} = \frac{\partial f_5}{\partial P_8}$$
$$C_{i,i,j} = \frac{\partial f_5}{\partial P_5} \quad (2\text{-}46)$$
$$C_{i,i+1,j} = \frac{\partial f_5}{\partial P_2}$$

Similarly the coefficient matrix E_j contains the elements:

$$E_{i,i,j} = \frac{\partial f_5}{\partial P_4}$$
$$\textit{and} \quad D_{i,i,j} = \frac{\partial f_5}{\partial P_6} \qquad (2\text{-}47)$$

R_j contains all the elements not multiplied by the new pressure

$$R_j = -f_j^{old} + \sum_1^5 \frac{\partial f_j}{\partial P_k} P_k^{old} \tag{2-48}$$

2.4 Film Thickness Distribution and Misalignment

Misalignment occurs through axes in the plane of the bearing. If a thrust collar misaligns an angle α about the x axis and β about the y axis (see Fig. (2-1), the film thickness at any radius r, and angle θ is :

$$\begin{aligned} &H = C_o + e - \alpha r \sin\theta + \beta r \cos\theta \\ &\text{where } C_o = \text{reference or initial clearance} \\ &e = \text{axial displacement} \end{aligned} \tag{2-49}$$

In non-dimensional form

$$H = 1 + \frac{e}{C_o} - \frac{\alpha R_o}{C_o} R\sin\theta + \frac{\beta R_o}{C_o} R\cos\theta \tag{2-50}$$

In addition to a flat misaligned surface, other geometries can be treated. These are depicted on Fig (2-4). Included are Rayleigh steps and tapers in both the circumferential and radial directions. The boundaries of circumferential steps and tapers are defined by the i,j grid point values of the lower left and upper right hand corners of the depressed region. Hydrostatic geometries are also included. Inherently compensated orifices can be located in the grid region as well as orifice fed holes and orifice fed recesses. The recess location is defined similarly to steps and tapers.

2.5 Power Loss (Torque)

Power loss is obtained by integrating the viscous shear forces across the film. From Fig. (2-5), a force balance on an element produces:

$$\frac{\partial p}{\partial x} = \frac{\partial \tau}{\partial z} \tag{2-51}$$

but

$$\tau = \mu \frac{\partial U}{\partial z} \tag{2-52}$$

Therefore, $$\frac{\partial p}{\partial x} = \mu \frac{\partial^2 U}{\partial x^2} \tag{2-53}$$

Integrating,

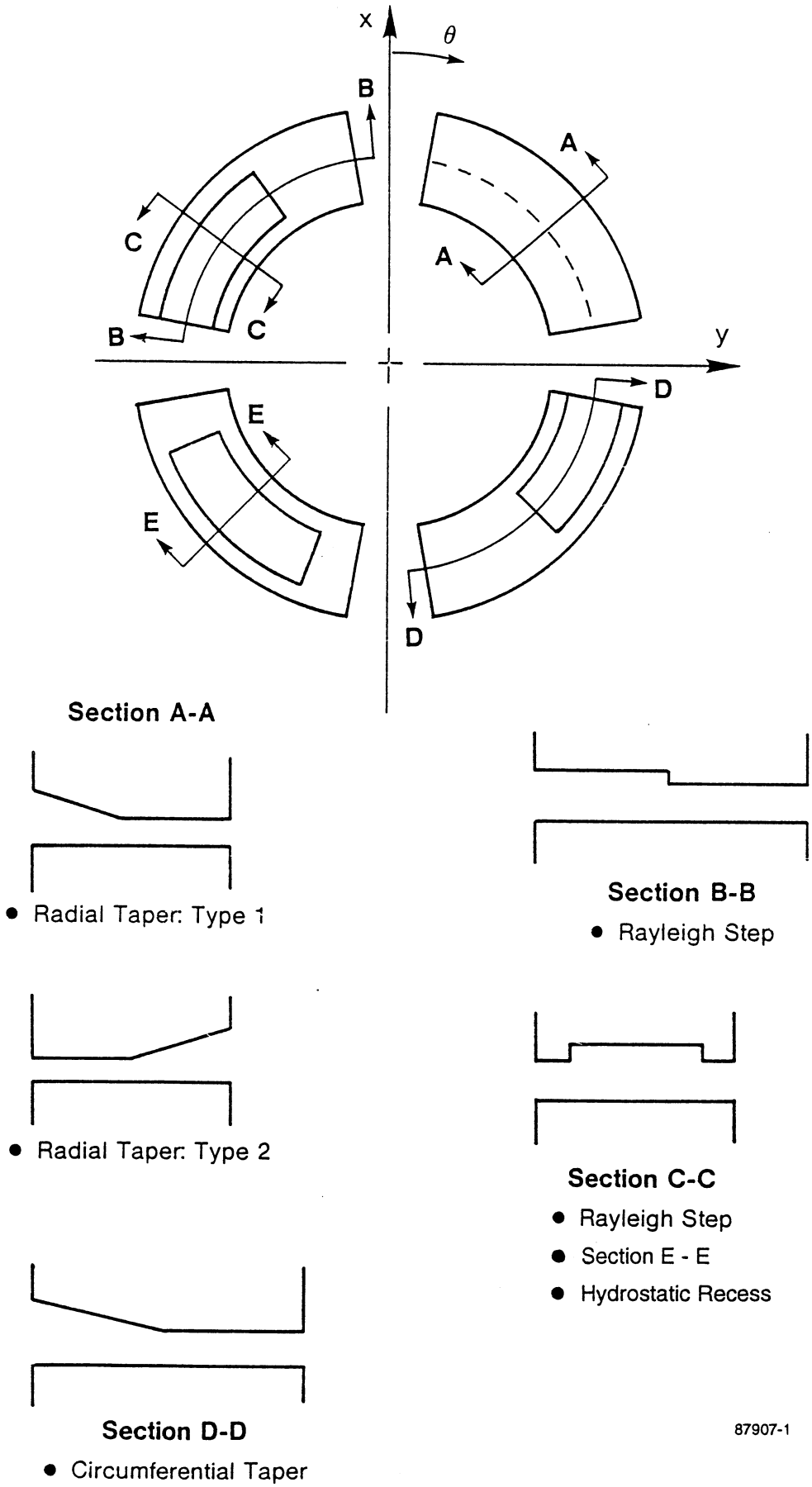

Figure 2-4 Non-Uniform Clearance Geometries

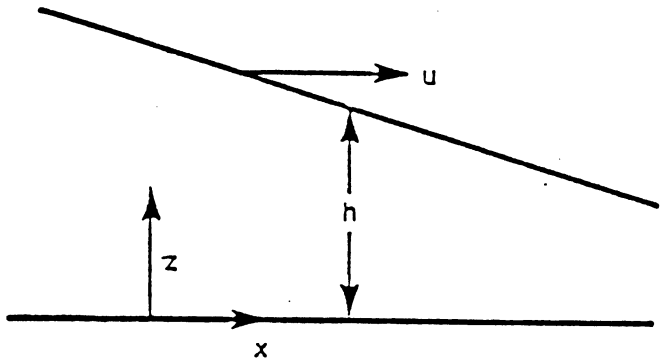

861595

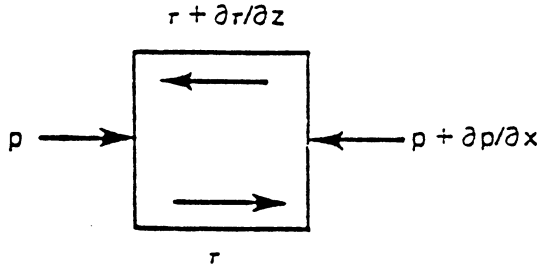

861594

Figure 2-5 Viscous Power Loss, Mathematical Model

$$\frac{\partial U}{\partial z} = \frac{1}{\mu}\frac{\partial p}{\partial x} z + C_1 \tag{2-54}$$

$$U = \frac{1}{\mu}\frac{\partial p}{\partial x}\frac{z^2}{2} + C_1 z + C_2 \tag{2-55}$$

The boundary conditions are:

$$\begin{aligned} &U = 0, z = 0, \therefore C_2 = 0 \\ &U = U \; when \; z = h \end{aligned} \tag{2-56}$$

Substituting:

$$U = \frac{1}{\mu}\frac{\partial p}{\partial x}\frac{h^2}{2} + C_1 h \tag{2-57}$$

Therefore,

$$C_1 = \frac{U}{h} - \frac{1}{\mu}\frac{\partial p}{\partial x}\frac{h}{2} \tag{2-58}$$

and

$$U = \frac{1}{\mu}\frac{\partial p}{\partial x}\left(\frac{z^2}{2} - \frac{h}{2}z\right) + \frac{U}{h}z \tag{2-59}$$

$$\frac{\partial U}{\partial z} = \frac{1}{\mu}\frac{\partial p}{\partial x}\left(z - \frac{h}{2}\right) + \frac{U}{h} \tag{2-60}$$

$$\tau = \mu\frac{\partial U}{\partial z} = \frac{\partial p}{\partial x}\left(z - \frac{h}{2}\right) + \frac{U}{h}\mu \tag{2-61}$$

$$\tau(at\, z = h) = \frac{\partial p}{\partial x}\frac{h}{2} + \mu\frac{U}{h} \tag{2-62}$$

$$F_f = friction\ force = \iint \tau dA$$

$$F_f = \iint\left(\frac{\partial p}{r d\theta}\frac{h}{2} + \frac{\mu r \omega}{h}\right) r^2 d\theta dr \tag{2-63}$$

$$\text{Friction torque} = T_f = \iint\left(\left(\frac{\partial p}{r d\theta}\frac{h}{2} + \frac{\mu r \omega}{h}\right)\right) r^2 d\theta dr \tag{2-64}$$

Separating and non-dimensionalizing

$$T_f = \frac{T_f}{p_o C R_o^{\,2}} = \iint \frac{H}{2}\frac{\partial p}{\partial \theta} R d\theta dr + \iint \frac{\Lambda}{6}\frac{R^2}{H} R d\theta dr \tag{2-65}$$

2.6 Computation of Bearing Flows

The program computes the flow across specified radial and circumferential grid lines. The flow across the ID and OD are automatically calculated for every case. A total of four additional flow paths can be specified by their i,j grid starting and ending locations. the subroutines FLOC1 and FLOCM determine flow across circumferential lines and the subroutines FLOA1 and FLOAN computes the flow across axial grid lines.

Circumferential Flow Line (see Figure (2-6))

There are three types of points to consider; a point on a grid boundary, J=1 or J=N, and an interior point. Also, a flow line I=M requires special consideration. For each point, a flow balance is accomplished through the cell surrounding the point as depicted on Fig. (2-6). Consider an interior point on an interior grid line (i≠M).

$$Q_c(I,J) = Q_{14}^{\,-} + Q_{14}^{\,+} + Q_{12}^{\,+} - Q_{34}^{\,+} \tag{2-66}$$

where

$$Q_{12}^{\,+} = \left[\left(H_1^3 \frac{\partial P}{\partial \theta}\right)_{12} P_{12} + \Lambda H_1 R P_{12}\right]\frac{DZ_i}{2} \tag{2-67}$$

$$\left[\frac{\partial P}{\partial \theta}\right]_{12} = \frac{\left(P_{i,j+1} - P_{ij}\right)}{\Delta\theta} \tag{2-68}$$

$$P_{12} = \frac{\left(P_{ij} + P_{i,j+1}\right)}{2.0} \tag{2-69}$$

The remaining flow components are similarly computed and $Q_C(I,J)$ determined. At J=1, $\left(\frac{\partial P}{\partial \theta}\right)_{34}$ is computed by forward difference and is equal to $\left(\frac{\partial P}{\partial \theta}\right)_{12}$. The pressure $P_{34}^{\,+} = P_{12}^{\,+}$.

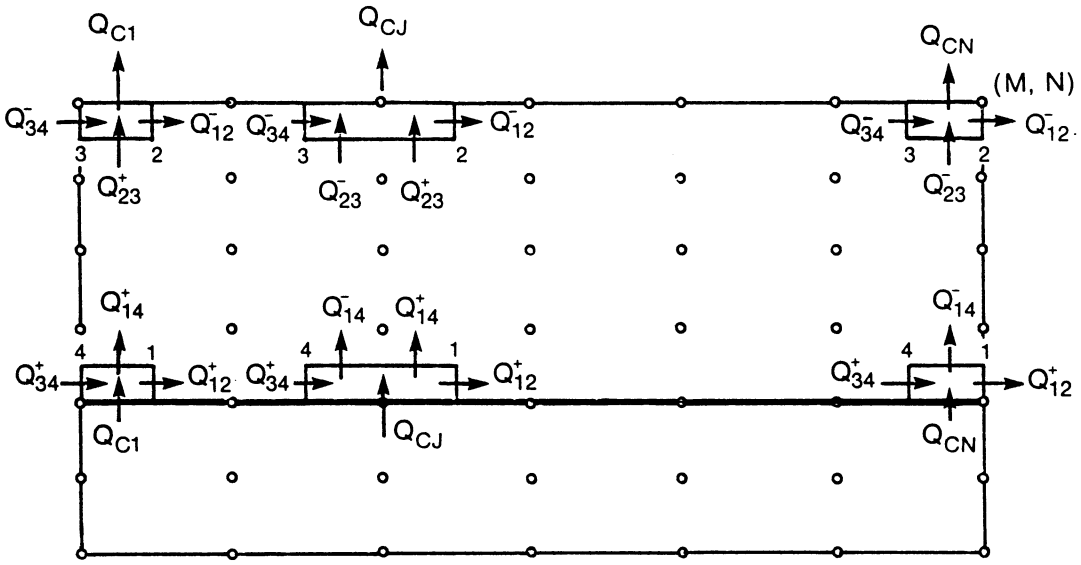

Figure 2-6 Flow Across Circumferential Line

861603

The clearance H_4 is not a regular grid point clearance and thus is not included in the grid clearance array. H_4 is computed as the average of H_{ij} and $H_{i+1,j}$.

The grid line mass flows are accumulated to obtain the total flow across the grid line. Similar procedures are employed for computing flows across axial lines (see Fig. (2-7)).

Frequency Dependent Stiffness and Damping Coefficients

Discretization has been carried out with the use of the cell method[1], which involves a flow balance around each grid point.

$$\int \vec{\nabla} \cdot Q dA = \oint \vec{Q} \cdot \vec{n} dS = -\frac{\partial}{\partial T} \int (1+P) H dA \tag{2-70}$$

where $\vec{Q}$ = the mass flow vector per unit length.

The equality of the first two terms comes from the divergence theorem.

In numerical format the right hand side becomes

$$-\frac{\partial}{\partial T}\left[\left(1+P_{ij}\right) H_{ij} A_{ij}\right] \tag{2-71}$$

where,

$$A_{ij} = \frac{1}{4}\left(\Delta\theta_j + \Delta\theta_{j-1}\right)\left(\Delta Z_i + \Delta Z_{i-1}\right) \tag{2-72}$$

Generally, a small perturbation analysis is used for determining frequency dependent stiffness and damping coefficients and solving the complete equation (2-71). A small perturbation analysis however, is generally limited to concentric operation and produces complex expressions for the perturbation coefficients. Identical results can be achieved by direct numerical perturbation of the difference equations used in the column matrix solution approach. This method, which is described below, avoids algebraic error in determining the perturbation coefficients and may be used in complex situations where analytical determination of the perturbation coefficients is not feasible.

After desired convergence of the Newton-Raphson process has been achieved under steady (unperturbed) conditions, the resulting steady state pressure vectors are denoted as $\left\{\hat{P}\right\}$ and the coefficient matrices as $\left[\hat{C}^j\right]$, etc. and as before this steady state equation becomes: $\left[\hat{C}^j\right]\left\{\hat{P}_j\right\} + \left[\hat{E}^j\right]\left\{\hat{P}_{j-1}\right\} + \left[\hat{D}^j\right]\left\{\hat{P}_{j+1}\right\} = \left\{\hat{R}^j\right\}$ (2-73)

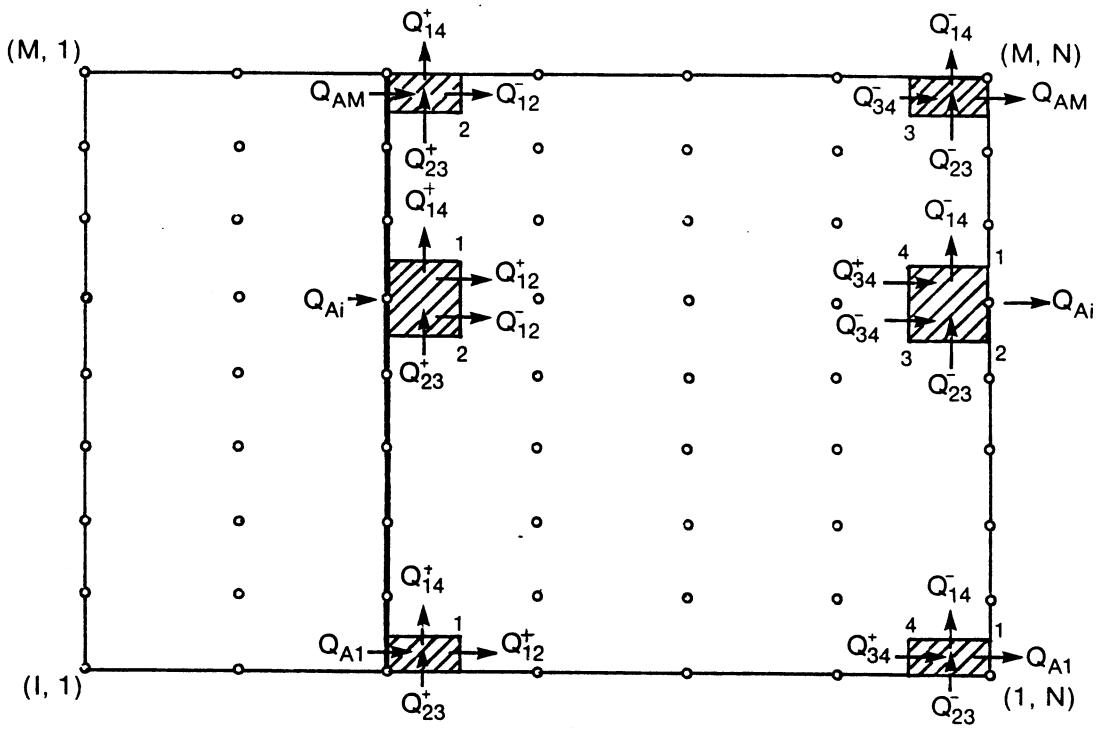

Figure 2-7 Flow Across Axial Line

861602

The eccentricity components can be perturbed individually by an amount η, and the matrix $\left[\hat{C}^j\right]$ recalculated at the new film thickness (but old pressure distribution); then subtract $\left[\hat{C}^j\right]$ at the old film thickness and divide the difference by η to numerically obtain the partial derivative of $\left[\hat{C}^j\right]$ with respect to the eccentricity perturbation. This partial derivative will be denoted by $\left[\hat{C}^{j,k}\right]$. Thus,

$$\left[\hat{C}^{j,k}\right] = \frac{\left[\hat{C}^j\right]\Big|_{\varepsilon_k+\eta} - \left[\hat{C}^j\right]\Big|_{\varepsilon_k}}{\eta} \tag{2-74}$$

The matrices $\left[\hat{E}^{j,k}\right], \left[\hat{D}^{j,k}\right]$ *and* $\left\{\hat{R}^{j,k}\right\}$ are obtained in a similar manner. Equation (2-73) may now be formally integrated with respect to ε_k to obtain the expression:

$$\left[\hat{C}^j\right]\left\{\hat{P}_j^{,k}\right\} + \left[\hat{E}^j\right]\left\{\hat{P}_{j-1}^{,k}\right\} + \left[\hat{D}^j\right]\left\{\hat{P}_{j+1}^{,k}\right\} = \left\{\hat{R}^{j,k}\right\} - \left[\hat{C}^{j,k}\right]\left\{\hat{P}_j\right\} - \left[\hat{E}^{j,k}\right]\left\{\hat{P}_{j-1}\right\} - \left[\hat{D}^{j,k}\right]\left\{\hat{P}_{j+1}\right\} \tag{2-75}$$

where $\left\{\hat{P}^{,k}{}_j\right\} = \dfrac{\partial\left\{\hat{P}_j\right\}}{\partial\varepsilon_k}$ is the zero frequency stiffness pressure. This expression does not yet contain the time dependent terms found on the right hand side of equation (2-70). It is assumed that a sinusoidal disturbance is applied to the shaft, such that the clearance and pressure derivatives are affected as follows:

$$H = \eta e^{i\sigma\bar{t}} \quad ; \quad \hat{P}_j^{,k} = P_j^{,k}\eta e^{i\sigma\bar{t}} \tag{2-76}$$

To complete the process, the right hand side of equation (2-70) is differentiated with respect to ε_k and the results added to the right hand side of equation (2-75) with $\dfrac{\partial}{\partial\bar{t}}$ replaced by $i\sigma$. The terms to be added to the right hand side of equation (2-75) in this manner are $-i\sigma\left[\overline{C}^j\right]\left\{\hat{P}_j^{,k}\right\} - i\sigma\left\{\overline{R}^{j,k}\right\}$ where $\left[\overline{C}^j\right]$ are diagonal matrices whose components are:

$$\overline{C}_{ii}^j = H_{ij}A_{ij} \tag{2-77}$$

Because a cell can have clearance discontinuities, such as a step, it is advantageous to partition the cell into 4 components as indicated on Fig. (2-2) and then sum the components to obtain $\left[\overline{C}^j\right]$. Thus equation (2-77) becomes:

$$\overline{C}_{ii}^j = HC_1A_1 + HC_2A_2 + HC_3A_3 + HC_4A_4 \tag{2-78}$$

where HC_1 is the clearance at the corner point 1 of the cell and

$$A_1 = \frac{(\Delta\theta_j)(\Delta Z_i)}{4}$$
$$A_2 = \frac{(\Delta\theta_j)(\Delta Z_{i-1})}{4}; \quad etc. \tag{2-79}$$

and $\{\overline{R}^{ik}\}$ are column vectors whose components are:

$$\overline{R}_i^{ik} = A_{ij}\frac{\partial H_{ij}}{\partial \varkappa_k}(1+P_{ij}) \tag{2-80}$$

By combining terms, the final set of linear equations for the complex stiffness pressure derivatives $\{P_j^k\}$ are obtained.

$$[C^{*j}]\{P_j^k\}+[\hat{E}^j]\{P_{j-1}^k\}+[\hat{D}^j]\{P_{j+1}^k\}=\{\hat{R}^{ik}\}-[\hat{C}^{ik}]\{\hat{P}_j\}-[\hat{E}^{ik}]\{\hat{P}_{j-1}\}-[\hat{D}^{ik}]\{\hat{P}_{j+1}\} \tag{2-81}$$

where,

$$[C^{*j}]=[\hat{C}^j]+i\sigma[\overline{C}^j]; \quad \{R^{ik}\}=\{\hat{R}^{ik}\}-i\sigma\{\overline{R}^{ik}\} \tag{2-82}$$

The system of equations given by (2-81) is solved by the column method in a directly analogous manner to that used in solving the steady state equation. The principal difference is that all the matrix operations are performed using complex arithmetic. Integration of the real part of the pressure derivatives yields the stiffness, while the complex parts when integrated and divided by σ yields the damping.

3.0 PROGRAM ORGANIZATION

3.1 Overall Organization

A flow chart of the program organization is shown on Fig. (3-1) To understand the logic of the program, it has been organized into separate blocks, each containing a number of subroutines.

The main program is GFACE. It is a short program that calls upon other routines for the bulk of the computations. It first calls BLOCK1 for reading and writing input, converting to dimensionless variables for internal computation and providing direction for the two primary options that the program considers. These are:

1. Option A - Given collar displacement, determine performance.

2. Option B - Given load, find collar displacement and determine performance.

Option A is called by the subroutine GFOPTA and Option B is called by the subroutine GFOPT2. Option A calls on Block 2 directly and performance is produced without iteration. It then calls upon Block 3 for output.

Option B begins with an initial guess for the clearance . Newton- Raphson algorithms are employed to produce collar displacements to balance the given load, i.e.,

$$\begin{aligned} &F_{zr} - F_{zc} = 0 \\ &where \\ &F_{zr} = required\,load\,in\,Z\,direction \\ &F_{zc} = calculated\,load\,in\,Z\,direction \end{aligned} \tag{3-1}$$

but

$$F_{zc} = F_z^{old} + \Delta F_z^{old} = F_z^{old} + \frac{\partial F_z}{\partial Z}\Delta Z \tag{3-2}$$

The partial derivatives are stiffnesses which are obtained by incrementing Z displacements. Equation (3-2) is substituted into Equation (3-1). The system of equations are solved for ΔZ which provide the new displacements for the next iteration. The process continues until the calculated load equals the required load within a preset convergence criteria.

Block 3 is a group of subroutines that compute output parameters and stores them in an output file.

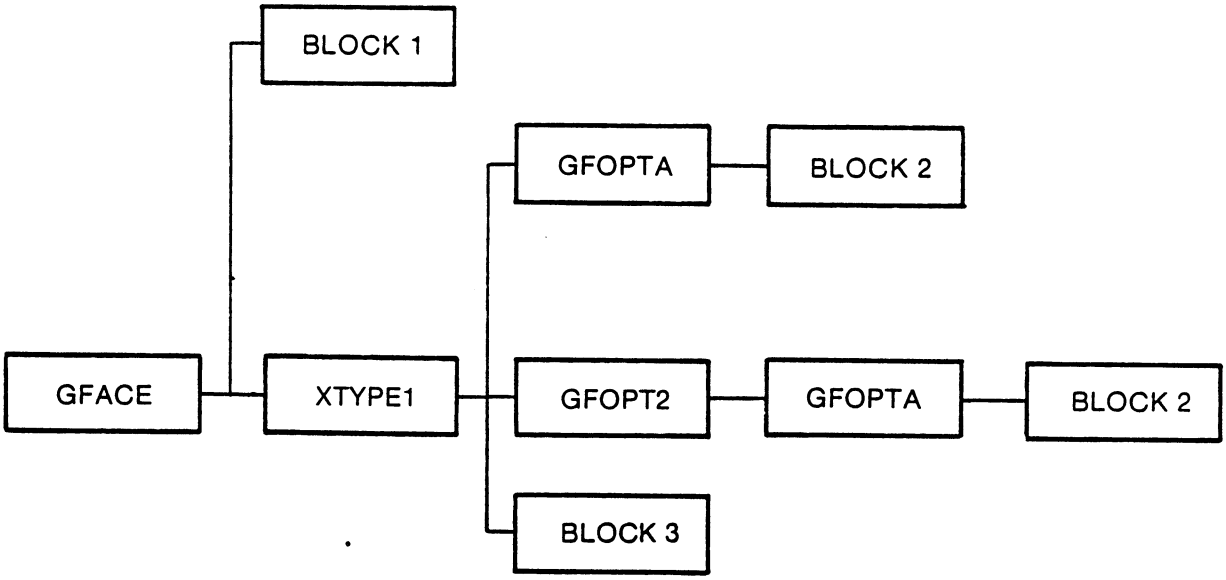

Figure 3-1 Overall Program Organization

861598-1

3.2 Block 1 - Input and Initialization (see Fig. 3-2)

GFACE calls two input routines GFINP0 and GFINP1 respectively. GFINP0 merely sets default values for all optional variables. GFINP1 reads in all the input and converts dimensional numbers to dimensionless numbers for program execution. The input has been set up to read quantities with variable description rather than formatted numbers. It reads the input a line at a time calling upon the subroutine RDLINE for every line of input read. Both routines have been set up in character variable format. RDLINE reads the first 80 characters on any line and assigns them to the variable CH80. It then assigns the first character of CH80 to the variable CH1 and the first six characters to the variable CH6. If the first character is an asterisk (*) a return to GFINP1 is made; if not columns 11 through 70 of CH80 are read and assigned to VAL(I), I=1, 10. A return to GFINP1 is then made, where VAL(I) is assigned to the variable the program utilizes. For example, if CH6 is the variable DIAMET (diameter), then GFINP1 will assign VAL(I) to the variable DIA and print out its value.

In this manner, all input quantities are assigned and printed in the output file.

The subroutine GFOUT1 will print out some input and computed quantities, that are being used, in a more logical fashion then GFINP1 which is an echo of the input file. It organizes the printout by geometry, special film thickness specifications, boundary conditions, the grid model, etc. It also accomplishes several computations needed elsewhere in the program, such as the value of the dimensionless variable Lambda (Λ).

The subroutine WTITLE will print out titles read in character format and the subroutine SETPRS initializes the pressure field with the dimensionless gage pressure value of 1.0. In other words all pressures are set equal to the reference pressure to start the process, with the exception of specified pressures which are read in with the specified values.

3.3 Block 2 - Determination of Pressure Distribution, Load, Viscous Torque and Laminar Flow with Preset Clearance Distribution (see Fig. 3-3)

Block 2 is called by subroutine GFOPTA, an option that fixes the position of the collar and seal so that the film thickness distribution can be immediately calculated. An alternate option is to determine the position of the collar to balance a given load. GFOPTA first goes into a pad loop and calls FILMT2 to compute the film thickness in the first pad. It then calls upon the subroutine GFBRG which is the processing program to determine the pressure at each grid point. GFBRG first calls NRPRC which is the core program for determining the Newton-Raphson pressure coefficients. These are a series of partial derivatives and flow residues for each of the cells where a mass flow balance takes place (see section 2). NRPRC calls upon subroutine QSUM which accomplishes the flow balance. It obtains the partial derivatives by sequentially incrementing the five pressures P_1 through P_5 individually and calling on QSUM for each pressure increment. The partial derivatives are equal to the incremented flow less the non-incremented flow divided by the

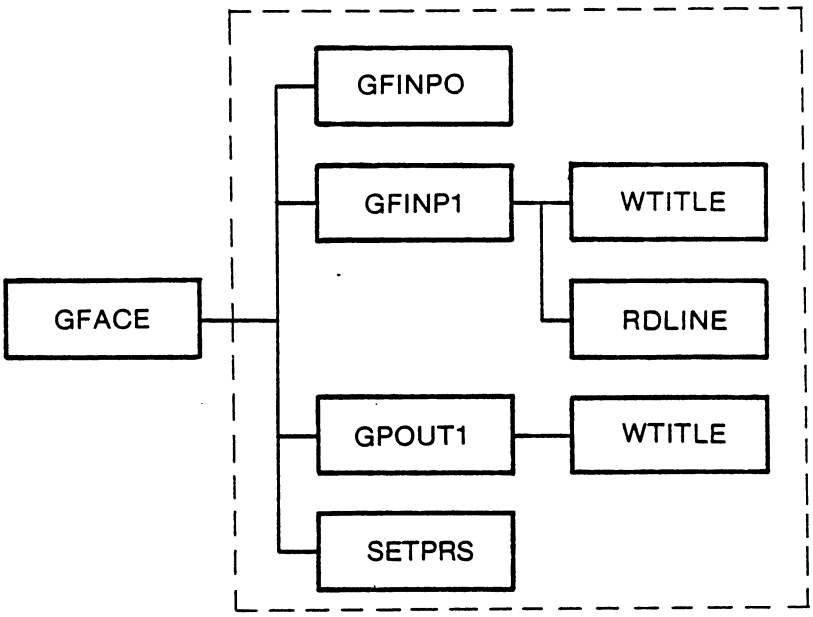

Figure 3-2 Block 1

861597-1

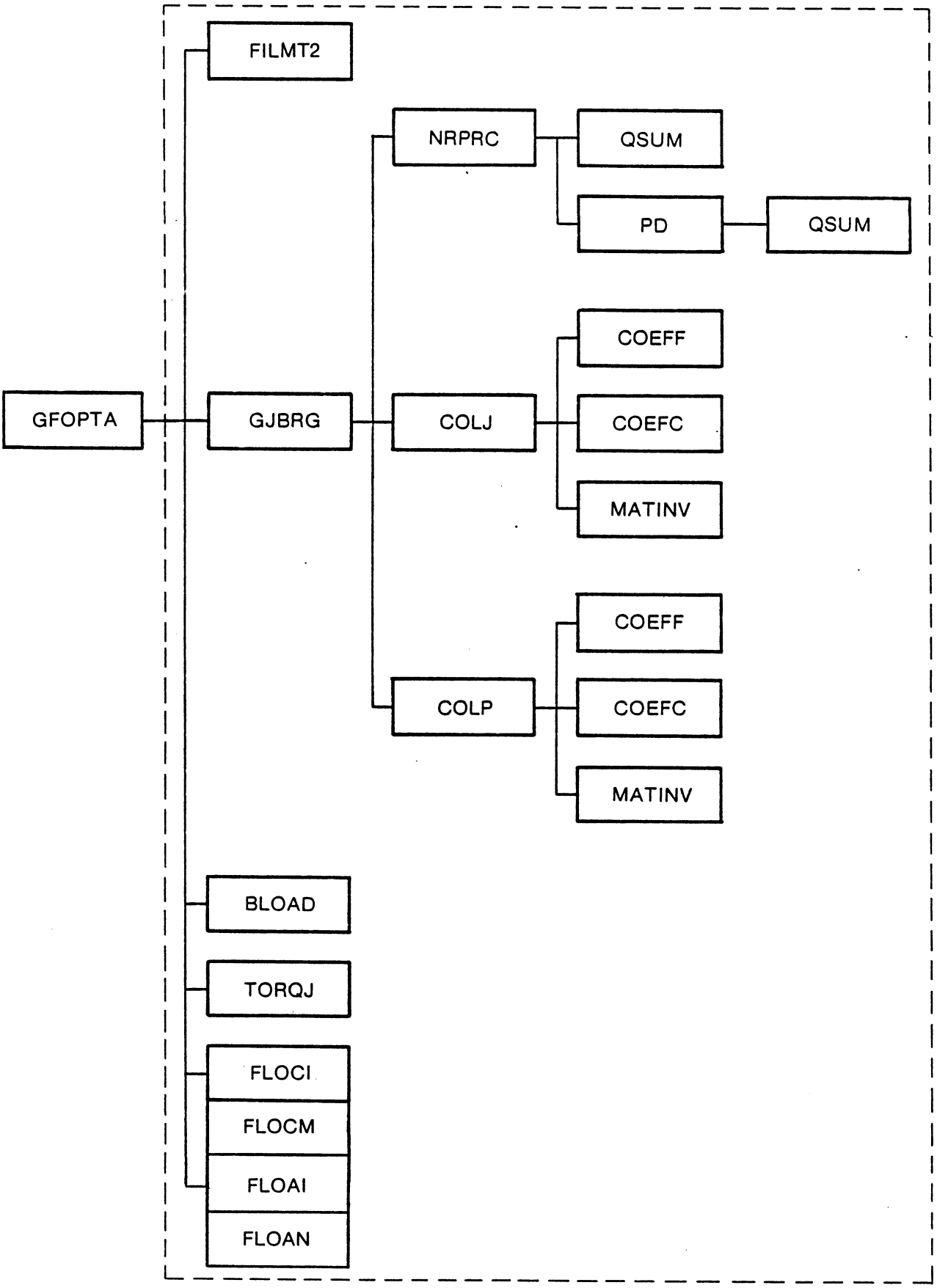

Figure 3-3 Block 2

861604-1

pressure increment. The partial derivatives actually called in the subroutine PD which is called form GFBRG. Once the flow residues and partial derivatives of flow residues with respect to pressure are known, sufficient information is available to solve for the pressures using the column method. GFBRG will call COLP for known pressure boundary conditions or it will call COLJ for joined or periodic boundaries in the θ direction. Both COLP and COLJ call upon the subroutines COEFC and COEFF to form the coefficient matrices C, D, E and R, where C is formulated in COEFC and the remainder in COEFF. They also call upon MATINV for the necessary matrix conversions. Once the coefficient matrices are formulated, pressures are solved for by either COLP of COLJ. A return is then made to GFBRG where the new pressures are compared against the previous ones. If convergence is not achieved within the specified tolerance, the old pressures are replaced by the new ones and the process continues until convergence is achieved or an iteration limit has been reached.

After the pressures are determined for all pads, the load capacity, viscous friction torque and flows can be established. Load is determined from the subroutine BLOAD which computes the average pressure for each grid rectangle and multiplies them times the grid rectangular area and then accumulates the products.

Viscous friction torque is determined from the subroutine TORQJ in accordance with equations developed in the theoretical section. The θ derivative of pressure at the midpoint of each cell is determined by taking the average of the two derivatives across the boundary grid points.

Flow is computed by the subroutine FLOC1, FLOCM, FLOA1, FLOAN. Viscous laminar flow is presumed, and computed across specified circumferential (FLOC1 FLOCN) and axial (FLOA1, FLOAN) lines. The theoretical section of this manual describes the procedures employed.

3.4 Block 3 - Output Routines (see Figure 3-4)

Subroutine GFOUT2 is the principal output subroutine. It writes out information in English or SI units depending upon which option is selected. All output is dimensional except for the clearance distribution which is maintained as dimensionless. Both the clearance and pressure distribution are read from File 2, where they were originally written, and are rewritten on the output file No. 6.

Subroutine HPFILE saves the pressure and clearance distributions on file No. 2, for subsequent plotting, if desired. Subroutine DIM1 converts dimensionless values, which are used for internal computation to dimensional values for output transcription.

3.5 Miscellaneous Routines

The program incorporates diagnostic routines which can be activated by setting the input variable NBUG=1. The default value for NBUG =0, which means the diagnostic routines

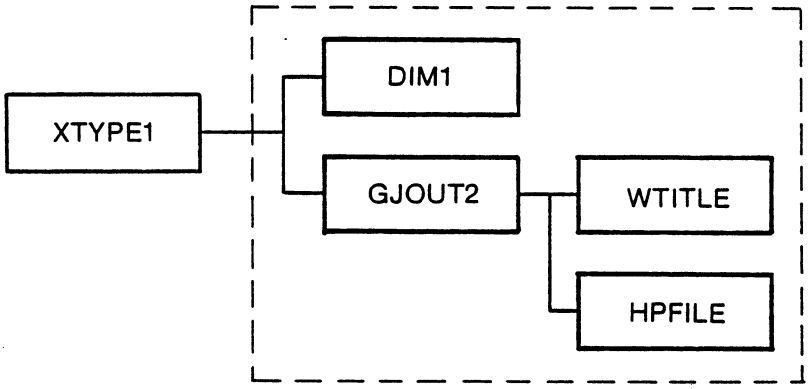

Figure 3-4 Block 3

861596-1

are not called. NBUG=0 is the default setting as the principal use of the diagnostic routines is for debugging.

Subroutine DIAG1 will print out the clearance distribution and the logical variables SPEC(I,J) and SOURCE(I,J) which identify where specified pressure and source points are located respectively. This information is printed on file NO. 3.

Subroutine DIAG2 saves partial derivatives of cell flow with respect to the pressures P_2, P_4, P_6 and P_8 and the flow residue itself. It writes this information on unit No. 3.

Subroutine DIAG3 saves the coefficients calculated for the column method. These are the C, D, E and F matrices. These are also written on unit No, 3.

Most of the information written from the diagnostic routines are inside iteration loops, so that they will be repeated,

The remaining subroutines are for 3D plotting of the clearance and pressure distributions.

4.0 PROGRAM INPUT

4.1 Input Description

To facilitate generating input, two key principles have been applied. The input is identified by words, not just pure numbers, and free format of input values obviates formatting. The identifying parameter is typed in alphanumeric format in columns 1 to 10. The values of the parameter are placed in columns 11 through 80. If more than one line of values are required, they can be continued on the following line in free format, starting in column 1. The parameters can be inserted in any order except for the first title line. Any line that begins with an asterisk in column 1 is considered as a comment by the code, and the parameter and associated values are ignored in the computations. Certain parameters will have default values, which the user can accept, in which case an input value does not have to be entered. If the parameter is entered, the default is overridden.

Group 1 - Control Parameters

The first input is the Title which is entered in alphanumeric format in columns 1 - 80. The Title will designate the output and plot files. For example, if the title is EXAMPLE1, the output file will be EXAMPLE1.OUT. **The input file must be copied or renamed to GFACE.INP. To run the code the instruction GFACE is typed from the keyboard.** A Title with less than 60 characters is recommended. The tabulation following describes the remainder of the input.

Parameter in Column 1-10	Description, Values in Column 11-80
OPTION	There are two options. For option = 1, the user provides the shaft or journal position in the form of a clearance and misalignment angles, and the program produces the loads and moments. For OPTION =2, the user provides the load, and initial estimate of the clearance, and the program will determine the clearance to provide a balancing load. An iterative homing procedure is used for OPTION = 2, and it will take more time than OPTION = 1. The default value is OPTION = 1.

UNIT

If the international or metric system of units are desired, enter SI somewhere in columns 11 through 80. The default units are English. The units for SI and English are as follows:

Description	SI	English
Length	m	in.
Diameter	m	in
Clearance	m	in
Load	N	lb
Gas Const	$m^2/s^2/^oK$	$in^2/s^2/^oR$
Temperature	^oK	^oR
Density	kg/m^3	lb/in^3
Viscosity	$N\text{-}s/m^2$	$lb\text{-}s/in^2$
Pressure	N/m^2	lb/in^2
Stiffness	N/m	lb/in
Damping	N-s/m	lb-s/in

*

An asterisk in column 1 is the designation for a comment. Any input following the asterisk will be treated as a comment and will not be an input parameter. It is useful in running multiple cases when certain input variables can be modified or eliminated. For example, if the user desires to repeat a case without stiffness and damping an asterisk is inserted before the input parameter, and when stiffness and damping are desired the asterisk is deleted.

STIFFNESS	Cross coupled, frequency dependent stiffness and damping are to be computed. The code will determine the stiffness and damping matrices in three degrees of freedom. These are the axial and angular modes about orthogonal axes. In column 11 through 80 enter the excitation frequency in rpm. Generally, synchronous frequency is used. The excitation frequency cannot =0. If a zero speed excitation is desired, then input a very small excitation speed, such as 0.0001 rpm.

Group 2 Bearing geometry

Parameter Columns 1-10	Description, Values 11-80
NPAD	The number of pads(always required)
INNER	Inner diameter (not required if variable grid is used)
OUTER	Outside diameter (not required if variable grid is used)
CLEARANCE	Seal clearance (always required)
START	Angular location in degrees for the start of the first pad (See Figure 2-1)
PADANGLE	Pad angle in degrees (not required if variable grid is used)
GRIDN	Number of grid points in the radial direction. Maximum number is 51 (see Figure 1-2). (always required except for variable grid)
GRIDM	Number of grid points in circumferential direction. Maximum number is 361 (see Figure 2-2). (always required except for variable grid).
VGRIDN	Enter the number of grid points used in the circumferential direction for variable grid problems (see Figure 1-2). The maximum number is 361 Following this entry, begin a new line and enter the angular location of the grid points in degrees, in columns 1 - 80 using free format. There must be N entries. If variable grid is used, GRIDN need not be entered.

VGRIDM	Enter the number of grid points used in the radial direction for variable grid problems. The maximum number is 51 (see Figure 2-2). Following this entry, begin a new line and enter the radial location of the grid points in dimensional units (inches or meters), in columns 1 - 80 using free format. There must be M entries. If variable grid is used, GRIDN need not be entered.
JOINED	To be entered when periodic boundary conditions apply in the circumferential direction, e.g. a complete circular seal or a seal sector, where the beginning and ending radial lines have equal pressures.

Group 3, Film thickness Specification

Parameter, Columns 1-10	Description, Values Columns 11-80
MISALIGN	Angular misalignment of the seal face in degrees. Two values are given unless misalignment is only about the x-axis. The first value is the misalignment about the x axis; the second value is the misalignment about the y axis.
STEP	Indicates that a Rayleigh step is being analyzed. The number of steps included in the grid definition is specified in columns 11 - 80. The maximum number of steps is eight. Following the step input line, is additional input designating the depth and location of each step. The step depth is first inserted followed by the I,J locations of the lower left and upper right corners of the step location. Thus, for each step there are 5 quantities to be inserted in free format anywhere from columns 1 - 80. One line of values for each step is required.
TAPER	Applies to a radial taper. For each taper there are three quantities to be inputted. The first is the radial node that the taper begins or ends. This is an interior point. The second value is the slope of the taper in degrees. The third value is either the numeral 1 or 2. the number 1 refers to a taper at the inside radius and 2 refers to a taper at the outside radius (see Fig. 4-1). A positive taper is one that increases with radius.

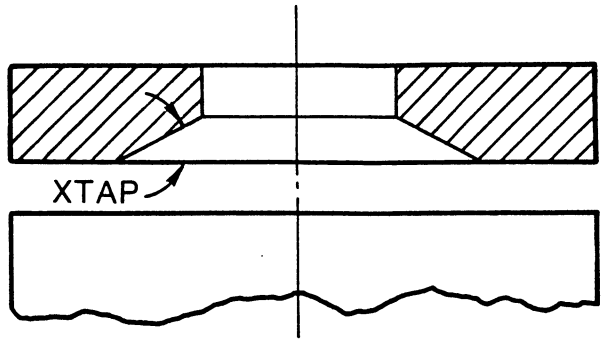

JTYP = 1

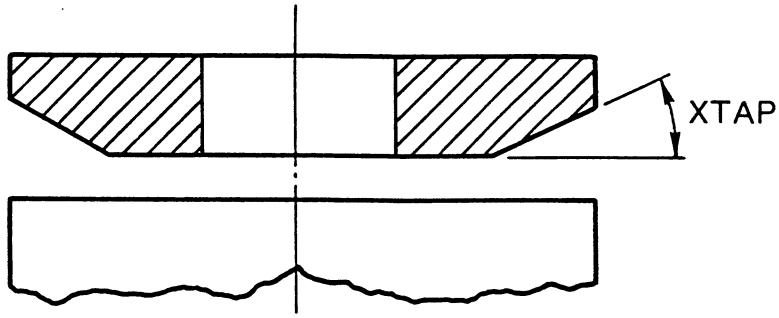

JTYP = 2

Figure 4-1 Two Types of Radially Tapered-Land Face Seals

86256

CTAPER

Indicates that a Circumferential Taper is being analyzed. The number of tapers included in the grid definition is specified in columns 11 - 80. The maximum number of tapers is eight.

Following the taper input line, is additional input designating the slope and location of each taper. The slope is first inserted followed by the I,J locations of the lower left and upper right corners of the taper location. Thus, for each taper there are 5 quantities to be inserted in free format anywhere from columns 1 - 80. One line of values for each taper is required.

RECESS

Indicates that a Hydrostatic Recess is being analyzed. The number of recesses included in the grid definition is specified in columns 11 - 80. The maximum number of recesses is eight.

Following the step input line, is additional input designating the depth and location of each recess. The recess depth is first inserted followed by the I,J locations of the lower left and upper right corners of the recess location. Thus, for each recess there are 5 quantities to be inserted in free format anywhere from columns 1 - 80. One line of values for each recess is required.

Group 4 - Lubricant Properties

Parameter, Columns 1-10	Description, Values Columns 11 - 80
VISCOSITY	Enter the value of viscosity in units specified in the description of UNIT (always required).
ABSTEMP	Enter the absolute temperature in the units specified in the description of UNIT (always required)
SPHEAT	Enter the ratio of specific heat at constant pressure to the specific heat at constant volume (always required).
GASCONST	Enter the gas constant in the units specified in the description of UNIT (always required)

Group 5, Parameters for Additional User Control

Parameter, Columns 1-10	Description, Values Columns 11-80
ITERATION	There are two variables that may be entered. (1) Maximum number of iterations for convergence of the pressure distribution. If the number of iterations are exceeded, the program will terminate with an error message. The default value is 10. (2) The maximum number of iterations to find the equilibrium position for OPTION = 2. This variable need only be entered if OPTION 2 is applied. The default value is 5. If the maximum number is exceeded, the program will terminate.
TOLERANCE	There are two variables that can be entered. (1) The tolerance on pressure convergence, (2) the tolerance on the equilibrium position (to be entered only if OPTION 2 is applied). The default values are 0.01.

FILE

If it is desired to use the pressure distribution from a previous run as an initial estimate, then FILE should be entered. The pressure distribution will be read from the file xxxx.HP created from the previous run. The name of the file will be the same as the title given on the first line of the input. Therefore, if it is desired to change the name of the input file, xxxx.HP file should either be renamed or copied to the new name that will be identical to the input name.

This variable is very useful in situations where convergence problems are encountered. Low eccentricities usually converge better than high eccentricities, so that to attain the high eccentricity case, it is sometimes required to read the initial pressure distribution from the low eccentricity case that has converged. In general, using FILE will speed convergence because of the more accurate initial pressure distribution.

Group 6, Operating Conditions

Parameter, Columns 1 - 10	Description, Values Columns 11-80
LOAD	Required for OPTION =2. Enter the load applied to the face of the seal.
SPEED	Enter shaft speed in rpm.
P0	PO is the reference gage pressure to which all other pressures are divided by in non-dimensionalizing the problem. The units are psi or Pa. In most cases, atmospheric pressure is used.
PLEFT	Gage pressure at the left grid radial boundary. Always required except for periodic boundary conditions (JOINED). The units are in psi or Pa
PRITE	Gage pressure at the right grid radial boundary. Always required except for periodic boundary conditions (JOINED). The units are in psi or Pa
PTOP	Gage pressure at the outside diameter circumferential boundary. Always required. The units are in psi or Pa.
PBOT	Gage pressure at the inside diameter circumferential boundary. Always required. The units are in psi or Pa.

PCON	Indicates that constant pressure regions apply. The number of regions included in the grid definition is specified in columns 11 - 80. The maximum number of regions is eight. Following the PCON input line, is additional input designating the pressure value and location of each region. The pressure value is first inserted followed by the I,J locations of the lower left and upper right corners of the region. Thus, for each region there are 5 quantities to be inserted in free format anywhere from columns 1 - 80. One line of values for each region is required.
PRESSURE	This parameter is to be used when pressures are specified inside the grid. Enter the number of specified pressures. Following this entry the locations of the specified pressure and the values of the pressures are inputted. For each pressure, the location is specified by the I,J grid location, followed by the numerical value of the gage pressure. There is to be one single line entry for each specified pressure that contains I, J, and the gage pressure value. Units of pressure are psi or Pa.

Group - 7 Hydrostatic Parameters

Parameter, Columns 1 -10	Description, Values columns 11 - 80
RECESS	Designates that hydrostatic recesses are located in the film. The number of recesses included in the grid is specified in columns 11 - 80. The maximum number of recesses in the grid specification is eight. Following the RECESS line, the depth and locations are specified. For each recess, the depth and the I,J grid values of the lower left corner and upper right corner are provided. These five values can be inserted in free format anywhere in columns 1 - 80. One line of values for each recess is required.
SOURCE	To be supplied when external inherently compensated orifices are to be introduced in the film. Enter the number of sources in columns 11-80. The limitation on the number is the grid size. Following this entry, the locations of the sources are inputted. For each source, the location is specified by the I,J grid location. There is a single line entry for each source.
SPOTRECESS	To be applied when external orifice compensated spot recesses are to be introduced in the film. Enter the number of spot recesses in columns 11 - 80. The limitation on the number is the grid size. For each spot recess. the location is specified by the I,J grid location. There is one single line entry for each spot recess.

DO	Enter the orifice diameter for sources, recesses or spot recesses.
CD	Coefficient of discharge for orifice compensation. Default value is 0.9
PS	Supply pressure upstream of orifice, psig or Pa.

Group 8, Flow Rate and End of Input

Parameter, Columns 1 -10	Description, Values columns 11 - 80
FLOW	This parameter is applied when the flow across an axial or circumferential grid line is desired. Enter the number of flow lines (maximum is 6). The flow across the boundaries I=1, and I=M, are computed automatically and should not be respecified. Following the flow line entry are the locations of each of the grid lines across which the flow is to be computed. This is done by specifying the I,J parameters at the beginning of each line and at the end of each line. Four values are entered on one line in columns 11 - 80. There are as many line entries as there are flow lines.
END	The last card of the input file is the end card. No further input will be read. This card is always required.

5.0 SAMPLE PROBLEMS

This section will present sample problems and describe the program output.

5.1 Multi- Pad Rayleigh Step Seal

An 8- pad Rayleigh -step seal without pressure gradient, but with misalignment was analyzed. The geometry and operating conditions are as follows:

Number of pads, NPAD	8
Outer diameter	4.0 in.
Inner diameter	2.5 in.
Angular extent of pad	35 degrees
Starting angle of first pad	5 degrees
Given displacement, find load. OPTION	1
Compute Stiffness at synchronous frequency	5000
Apply variable grid	
Clearance	0.0002 in.
Misalignment angle about the X- axis	-0.001 deg.
Number of steps in grid	1
step depth	0.0004 in.
Location of step	
Lower left corner	I=5, J=1
Upper right corner	I=8, J=8
Specific heat ratio	1.4
Gas constant	246,900 $in.^2/s^2/^oR$
Absolute temperature	1460° R
Viscosity	5.35×10^{-9} lbs-s/in^2
Speed	5000 rpm
Convergence tolerance	0.01
Ambient(reference) pressure	14.7 psi

Based on the above information, the input file was prepared as shown on Fig. 5-1. The case identifier is XAMPLE1 which is the first line of the input file. The output and plotting files will thus have the identifying label as XAMPLE1.OUT, XAMPLE1.HP,etc. Comment statements (any line starting with an asterisk) are inserted to make the input file more readable. Note that a variable grid mesh is used to model the bearing surface. Finer grids are recommended where sharp variation in film thickness or pressure occur. In this particular case, finer grids are placed at the step and at the trailing edge of the pad.

A copy of the output is shown on Fig. 5-2. the input quantities are echoed first. They are then reorganized and printed into the following categories:

- Seal geometry
- Special film thickness information (step, misalignment, etc.)
- Lubricant properties
- External pressurization information
- Boundary conditions
- Seal Model information

The number of iterations required and the associated tolerances are also printed.

The calculated output includes the non-dimensional film thickness followed by the pressure distribution for each pad. The last page of output contains the net results for the entire seal. Journal position, load capacity, power loss and leakage are printed followed by the cross-coupled stiffness and damping coefficients.

Clearance and pressure distribution plots are shown on Figures 5-3, 5-4 and 5-5. To exercise the plotting program, the instruction PLOT XAMPLE1 is given. The various options of the plotting program are indicated on the screen panel which first appears when the plot program is executed.

```
XAMPLE1
RAYLEIGH STEP SEAL  EXAMPLE #1
*
NPAD         8
OPTION       1.
*
STIFFNESS    5000.
VGRIDM       12
    1.25  1.30  1.35  1.40  1.41  1.55  1.70
    1.84  1.85  1.90  1.95  2.00
VGRIDN       16
     5.  10.  15.  20.  24.  26.  28.  30.  30.1
    32.  34.  36.  37.  38.  39.  40.
*
CLEARANCE   0.0002
MISALIGN    -0.001
STEP         1
            .0004 5 1 8 8
SPHEAT      1.4
GASCONST    2.469E5
ABSTEMP     1460.
VISCOSITY   0.535E-8
TOLERA       0.01
SPEED       5000.
PO           14.7
PLEFT         0.
PRITE         0.
PTOP          0.
PBOT          0.
END
```

Figure 5-1 Sample Problem 1 - Rayleigh-Step Seal, Input File

```
05/26/1993  14:44        Filename: XAMPLE1.OUT                          Page   1


RAYLEIGH STEP SEAL  EXAMPLE #1
  GFACE

  ECHO OF INPUT

  *
  NPAD      =    8          NUMBER OF PADS
  OPTION    =    1          GIVEN CLEARANCE FIND LOAD CAPACITY
  *
  ISTIF     =    1          STIFFNESS CALCULATION
  EXCITATION SPEED, RPM  =    5000.0000
  GRIDM     =   12          GRID POINTS IN RADIAL DIRECTION
  VARIABLE GRID IN AXIAL DIRECTION
     1.250       1.300       1.350       1.400       1.410
     1.550       1.700       1.840       1.850       1.900
     1.950       2.000
  GRIDN     =   16          GRID POINTS IN CIRCUMFERENTIAL DIRECTION
  VARIABLE GRID IN CIRCUMFERENTIAL DIRECTION
     5.000       10.00       15.00       20.00       24.00
     26.00       28.00       30.00       30.10       32.00
     34.00       36.00       37.00       38.00       39.00
     40.00
  *
  CLEARANCE =  0.000200     BEARING CLEARANCE
  ALFA      =   -0.0010     X-ANGLE (MISALIGNMENT)
  BETA      =    0.0000     Y-ANGLE (MISALIGNMENT)
  RAYLEIGH STEP
  STEP HEIGHT =      0.00040          IL =     5     JL =     1     IR =     8
  JR =     8
  SPECIFIC  =    1.4000     SPECIFIC HEAT RATIO
  GAS CONST =  246900.0     GAS CONSTANT
  ABS TEMP  =   1460.00     ABSOLUTE TEMPERATURE
  VISCOSITY =  0.5350E-08   ABSOLUTE VISCOSITY
  TOL1      =    0.0100     TOLERANCE(COMPRESSIBILITY)
  TOL2      =    0.0000     ITERATION(OPTION 2)
  SPEED     =   5000.00     ROTATIONAL SPEED IN RPM
  PO        =     14.70     REFERENCE(AMBIENT)  PRESSURE
  PLEFT     =      0.00     GAGE PRESSURE AT LEFT BOUNDARY
  PRITE     =      0.00     GAGE PRESSURE AT RIGHT BOUNDARY
  PTOP      =      0.00     GAGE PRESSURE AT TOP BOUNDARY
  PBOT      =      0.00     GAGE PRESSURE AT BOTTOM BOUNDARY


RAYLEIGH STEP SEAL  EXAMPLE #1
  GFACE

  GAS THRUST BEARING/SEAL


  -BEARING GEOMETRY
   NUMBER OF PADS =    8
   OUTER DIAMETER =     4.000 IN
   INNER DIAMETER =     2.500 IN
        CLEARANCE =  0.000200 IN
   STARTING ANGLE =      5.00 DEG
        PAD ANGLE =     35.00 DEG

  -SPECIAL FILM THICKNESS SPECIFICATION
             ALFA =   -0.0010 DEG  ALIGNMENT ABOUT X-X
             BETA =    0.0000 DEG  ALIGNMENT ABOUT Y-Y

  -LUBRICANT PROPERTIES
                VISCOSITY =  0.5350000E-08 LB-S/IN**2
             GAS CONSTANT =   246900.0     IN**2/S**2-R
```

```
05/26/1993  14:44        Filename: XAMPLE1.OUT                          Page   2

          ABS. TEMPERATURE =   1460.000     DEG R

  -BOUNDARY CONDITIONS
      REFERENCE P =   14.70000     PSI
            PLEFT =  0.0000000E+00 PSI
            PRITE =  0.0000000E+00 PSI
             PTOP =  0.0000000E+00 PSI
             PBOT =  0.0000000E+00 PSI
            SPEED =   5000.000     RPM

  -BEARING MODEL
                M =   12
                N =   16
           JOINED =    F

   DZ
   0.250E-01 0.250E-01 0.250E-01 0.500E-02 0.700E-01
   0.750E-01 0.700E-01 0.500E-02 0.250E-01 0.250E-01
   0.250E-01 0.250E-01

   DTHETA
   0.873E-01 0.873E-01 0.873E-01 0.698E-01 0.349E-01
   0.349E-01 0.349E-01 0.175E-02 0.332E-01 0.349E-01
   0.349E-01 0.175E-01 0.175E-01 0.175E-01 0.175E-01
   0.175E-01


RAYLEIGH STEP SEAL  EXAMPLE #1
  GFACE

  -MAXIMUM NUMBER OF ITERATIONS
     MXIT1 =   10       (FOR COMPRESSIBILITY)
     MXIT2 =    5       (FOR OPTION 2)

  -TOLERANCE
      TOL1 =   0.01000  (FOR COMPRESSIBILITY)
      TOL2 =   0.01000  (FOR OPTION 2)

  -OPTION  =    1       GIVEN CLEARANCE  FIND LOAD CAPACITY
```

Figure 5-2 Sample Problem 1, Rayleigh-Step Seal, Output File

05/26/1993 14:44 Filename: XAMPLE1.OUT Page 3

NON-DIM CLEARANCE DISTRIBUTION(H/C) FOR PAD NUMBER 1

I =		1	2	3	4	5	6
AXIAL LENGTH IN.		1.250	1.300	1.350	1.400	1.410	1.550
J	DEG.						
1	5.0	0.990	0.990	0.990	0.989	2.99	2.99
2	10.0	0.981	0.980	0.980	0.979	2.98	2.98
3	15.0	0.972	0.971	0.970	0.968	2.97	2.96
4	20.0	0.963	0.961	0.960	0.958	2.96	2.95
5	24.0	0.956	0.954	0.952	0.950	2.95	2.94
6	26.0	0.952	0.950	0.948	0.946	2.95	2.94
7	28.0	0.949	0.947	0.945	0.943	2.94	2.94
8	30.0	0.945	0.943	0.941	0.939	2.94	2.93
9	30.1	0.945	0.943	0.941	0.939	0.938	0.932
10	32.0	0.942	0.940	0.938	0.935	0.935	0.928
11	34.0	0.939	0.937	0.934	0.932	0.931	0.924
12	36.0	0.936	0.933	0.931	0.928	0.928	0.920
13	37.0	0.934	0.932	0.929	0.926	0.926	0.919
14	38.0	0.933	0.930	0.927	0.925	0.924	0.917
15	39.0	0.931	0.929	0.926	0.923	0.923	0.915
16	40.0	0.930	0.927	0.924	0.921	0.921	0.913

05/26/1993 14:44 Filename: XAMPLE1.OUT Page 4

NON-DIM CLEARANCE DISTRIBUTION(H/C) FOR PAD NUMBER 1

I =		7	8	9	10	11	12
AXIAL LENGTH IN.		1.700	1.840	1.850	1.900	1.950	2.000
J	DEG.						
1	5.0	2.99	2.99	0.986	0.986	0.985	0.985
2	10.0	2.97	2.97	0.972	0.971	0.970	0.970
3	15.0	2.96	2.96	0.958	0.957	0.956	0.955
4	20.0	2.95	2.95	0.945	0.943	0.942	0.940
5	24.0	2.94	2.93	0.934	0.933	0.931	0.929
6	26.0	2.93	2.93	0.929	0.927	0.925	0.923
7	28.0	2.93	2.92	0.924	0.922	0.920	0.918
8	30.0	2.93	2.92	0.919	0.917	0.915	0.913
9	30.1	0.926	0.919	0.919	0.917	0.915	0.912
10	32.0	0.921	0.915	0.914	0.912	0.910	0.908
11	34.0	0.917	0.910	0.910	0.907	0.905	0.902
12	36.0	0.913	0.906	0.905	0.903	0.900	0.897
13	37.0	0.911	0.903	0.903	0.900	0.898	0.895
14	38.0	0.909	0.901	0.901	0.898	0.895	0.893
15	39.0	0.907	0.899	0.898	0.896	0.893	0.890
16	40.0	0.905	0.897	0.896	0.893	0.891	0.888

MIN. CLEAR.= 0.88781 AT 40.000 DEGREES

MAX. CLEAR.= 2.9893 AT 5.0000 DEGREES

Figure 5-2 (Cont.)

05/26/1993 14:44 Filename: XAMPLE1.OUT Page 5

PRESSURE DISTRIBUTION (PSI) FOR PAD NUMBER 1

I =		1	2	3	4	5	6
AXIAL LENGTH IN.		1.250	1.300	1.350	1.400	1.410	1.550
J	DEG.						
1	5.0	0.000E+00	0.000E+00	0.000E+00	0.000E+00	0.000E+00	0.000E+00
2	10.0	0.000E+00	0.205	0.502	1.19	1.44	1.40
3	15.0	0.000E+00	0.668	1.63	3.37	3.88	3.85
4	20.0	0.000E+00	1.66	3.76	6.83	7.61	7.69
5	24.0	0.000E+00	2.95	6.27	10.5	11.5	11.8
6	26.0	0.000E+00	3.72	7.70	12.6	13.7	14.2
7	28.0	0.000E+00	4.58	9.24	14.7	15.9	16.7
8	30.0	0.000E+00	5.42	10.7	16.7	18.2	19.5
9	30.1	0.000E+00	5.46	10.7	16.7	18.0	19.5
10	32.0	0.000E+00	5.98	11.2	16.0	16.8	19.4
11	34.0	0.000E+00	6.21	11.2	15.2	15.8	19.1
12	36.0	0.000E+00	6.06	10.6	14.2	14.8	18.4
13	37.0	0.000E+00	5.79	10.1	13.4	13.9	17.7
14	38.0	0.000E+00	5.18	9.00	11.9	12.4	16.2
15	39.0	0.000E+00	3.81	6.73	9.03	9.43	12.8
16	40.0	0.000E+00	0.000E+00	0.000E+00	0.000E+00	0.000E+00	0.000E+00

05/26/1993 14:44 Filename: XAMPLE1.OUT Page 6

PRESSURE DISTRIBUTION (PSI) FOR PAD NUMBER 1

I =		7	8	9	10	11	12
AXIAL LENGTH IN.		1.700	1.840	1.850	1.900	1.950	2.000
J	DEG.						
1	5.0	0.000E+00	0.000E+00	0.000E+00	0.000E+00	0.000E+00	0.000E+00
2	10.0	1.22	1.07	0.869	0.380	0.183	0.000E+00
3	15.0	3.54	3.21	2.73	1.24	0.507	0.000E+00
4	20.0	7.39	6.94	6.12	3.09	1.28	0.000E+00
5	24.0	11.7	11.3	10.2	5.67	2.51	0.000E+00
6	26.0	14.3	14.0	12.7	7.26	3.28	0.000E+00
7	28.0	17.3	17.0	15.6	9.20	4.25	0.000E+00
8	30.0	20.5	20.6	18.8	11.5	5.55	0.000E+00
9	30.1	20.5	20.4	18.8	11.6	5.62	0.000E+00
10	32.0	20.3	18.6	17.8	12.3	6.44	0.000E+00
11	34.0	20.0	17.4	16.8	12.3	6.82	0.000E+00
12	36.0	19.4	16.5	15.9	12.0	6.87	0.000E+00
13	37.0	18.8	16.0	15.4	11.8	6.83	0.000E+00
14	38.0	17.6	15.2	14.7	11.4	6.71	0.000E+00
15	39.0	14.5	13.2	12.8	10.3	6.40	0.000E+00
16	40.0	0.000E+00	0.000E+00	0.000E+00	0.000E+00	0.000E+00	0.000E+00

MIN. PRESS= 0.00000E+00 AT 40.000 DEGREES

MAX. PRESS= 20.574 AT 30.000 DEGREES

Figure 5-2 (Cont.)

05/26/1993 14:44 Filename: XAMPLE1.OUT Page 7

NON-DIM CLEARANCE DISTRIBUTION(H/C) FOR PAD NUMBER 2

I =	1	2	3	4	5	6
AXIAL LENGTH IN.	1.250	1.300	1.350	1.400	1.410	1.550
J DEG.						
1 50.0	0.916	0.913	0.910	0.906	2.91	2.90
2 55.0	0.911	0.907	0.903	0.900	2.90	2.89
3 60.0	0.906	0.902	0.898	0.894	2.89	2.88
4 65.0	0.901	0.897	0.893	0.889	2.89	2.88
5 69.0	0.898	0.894	0.890	0.886	2.89	2.87
6 71.0	0.897	0.893	0.889	0.884	2.88	2.87
7 73.0	0.896	0.892	0.887	0.883	2.88	2.87
8 75.0	0.895	0.890	0.886	0.882	2.88	2.87
9 75.1	0.895	0.890	0.886	0.882	0.881	0.869
10 77.0	0.894	0.889	0.885	0.881	0.880	0.868
11 79.0	0.893	0.889	0.884	0.880	0.879	0.867
12 81.0	0.892	0.888	0.884	0.879	0.878	0.866
13 82.0	0.892	0.888	0.883	0.879	0.878	0.866
14 83.0	0.892	0.887	0.883	0.879	0.878	0.866
15 84.0	0.892	0.887	0.883	0.878	0.878	0.865
16 85.0	0.891	0.887	0.883	0.878	0.877	0.865

05/26/1993 14:44 Filename: XAMPLE1.OUT Page 8

NON-DIM CLEARANCE DISTRIBUTION(H/C) FOR PAD NUMBER 2

I =	7	8	9	10	11	12
AXIAL LENGTH IN.	1.700	1.840	1.850	1.900	1.950	2.000
J DEG.						
1 50.0	2.89	2.88	0.876	0.873	0.870	0.866
2 55.0	2.88	2.87	0.868	0.864	0.861	0.857
3 60.0	2.87	2.86	0.860	0.856	0.853	0.849
4 65.0	2.87	2.85	0.854	0.850	0.846	0.842
5 69.0	2.86	2.85	0.849	0.845	0.841	0.837
6 71.0	2.86	2.85	0.847	0.843	0.839	0.835
7 73.0	2.86	2.85	0.846	0.841	0.837	0.833
8 75.0	2.86	2.84	0.844	0.840	0.836	0.831
9 75.1	0.857	0.845	0.844	0.840	0.836	0.831
10 77.0	0.855	0.844	0.843	0.838	0.834	0.830
11 79.0	0.854	0.842	0.842	0.837	0.833	0.829
12 81.0	0.853	0.841	0.841	0.836	0.832	0.828
13 82.0	0.853	0.841	0.840	0.836	0.831	0.827
14 83.0	0.853	0.841	0.840	0.835	0.831	0.827
15 84.0	0.852	0.840	0.839	0.835	0.831	0.826
16 85.0	0.852	0.840	0.839	0.835	0.830	0.826

MIN. CLEAR.= 0.82613 AT 85.000 DEGREES

MAX. CLEAR.= 2.9057 AT 50.000 DEGREES

Figure 5-2 (Cont.)

05/26/1993 14:44 Filename: XAMPLE1.OUT Page 9

PRESSURE DISTRIBUTION (PSI) FOR PAD NUMBER 2

I =		1	2	3	4	5	6
AXIAL LENGTH IN.		1.250	1.300	1.350	1.400	1.410	1.550
J	DEG.						
1	50.0	0.000E+00	0.000E+00	0.000E+00	0.000E+00	0.000E+00	0.000E+00
2	55.0	0.000E+00	0.156	0.442	1.23	1.54	1.48
3	60.0	0.000E+00	0.571	1.56	3.59	4.21	4.16
4	65.0	0.000E+00	1.57	3.81	7.38	8.31	8.38
5	69.0	0.000E+00	2.94	6.53	11.4	12.6	12.9
6	71.0	0.000E+00	3.76	8.09	13.6	14.9	15.4
7	73.0	0.000E+00	4.70	9.78	15.9	17.3	18.2
8	75.0	0.000E+00	5.65	11.4	18.1	19.7	21.1
9	75.1	0.000E+00	5.69	11.4	18.1	19.6	21.1
10	77.0	0.000E+00	6.29	12.0	17.3	18.2	21.0
11	79.0	0.000E+00	6.59	11.9	16.4	17.1	20.7
12	81.0	0.000E+00	6.48	11.4	15.4	16.0	19.9
13	82.0	0.000E+00	6.23	10.9	14.5	15.1	19.2
14	83.0	0.000E+00	5.64	9.83	13.1	13.6	17.7
15	84.0	0.000E+00	4.24	7.49	10.1	10.5	14.3
16	85.0	0.000E+00	0.000E+00	0.000E+00	0.000E+00	0.000E+00	0.000E+00

05/26/1993 14:44 Filename: XAMPLE1.OUT Page 10

PRESSURE DISTRIBUTION (PSI) FOR PAD NUMBER 2

I =		7	8	9	10	11	12
AXIAL LENGTH IN.		1.700	1.840	1.850	1.900	1.950	2.000
J	DEG.						
1	50.0	0.000E+00	0.000E+00	0.000E+00	0.000E+00	0.000E+00	0.000E+00
2	55.0	1.28	1.10	0.852	0.303	0.132	0.000E+00
3	60.0	3.80	3.44	2.84	1.09	0.384	0.000E+00
4	65.0	8.04	7.57	6.56	2.97	1.08	0.000E+00
5	69.0	12.8	12.4	11.0	5.75	2.35	0.000E+00
6	71.0	15.7	15.3	13.8	7.46	3.14	0.000E+00
7	73.0	18.8	18.7	16.9	9.55	4.15	0.000E+00
8	75.0	22.3	22.5	20.4	12.1	5.58	0.000E+00
9	75.1	22.3	22.3	20.5	12.3	5.66	0.000E+00
10	77.0	22.0	20.3	19.4	13.1	6.65	0.000E+00
11	79.0	21.7	19.0	18.2	13.2	7.18	0.000E+00
12	81.0	21.0	17.9	17.3	12.9	7.31	0.000E+00
13	82.0	20.4	17.4	16.8	12.7	7.30	0.000E+00
14	83.0	19.3	16.6	16.1	12.4	7.24	0.000E+00
15	84.0	16.3	14.9	14.5	11.7	7.28	0.000E+00
16	85.0	0.000E+00	0.000E+00	0.000E+00	0.000E+00	0.000E+00	0.000E+00

MIN. PRESS= 0.00000E+00 AT 85.000 DEGREES

MAX. PRESS= 22.491 AT 75.000 DEGREES

Figure 5-2 (Cont.)

05/26/1993 14:44 Filename: XAMPLE1.OUT Page 11

NON-DIM CLEARANCE DISTRIBUTION(H/C) FOR PAD NUMBER 3

I =		1	2	3	4	5	6
AXIAL LENGTH IN.		1.250	1.300	1.350	1.400	1.410	1.550
J	DEG.						
1	95.0	0.891	0.887	0.883	0.878	2.88	2.87
2	100.0	0.893	0.888	0.884	0.880	2.88	2.87
3	105.0	0.895	0.890	0.886	0.882	2.88	2.87
4	110.0	0.897	0.893	0.889	0.885	2.88	2.87
5	114.0	0.900	0.896	0.892	0.888	2.89	2.88
6	116.0	0.902	0.898	0.894	0.890	2.89	2.88
7	118.0	0.904	0.900	0.896	0.892	2.89	2.88
8	120.0	0.906	0.902	0.898	0.894	2.89	2.88
9	120.1	0.906	0.902	0.898	0.894	0.894	0.883
10	122.0	0.907	0.904	0.900	0.896	0.896	0.885
11	124.0	0.910	0.906	0.902	0.899	0.898	0.888
12	126.0	0.912	0.908	0.905	0.901	0.900	0.891
13	127.0	0.913	0.909	0.906	0.902	0.902	0.892
14	128.0	0.914	0.911	0.907	0.904	0.903	0.893
15	129.0	0.915	0.912	0.908	0.905	0.904	0.895
16	130.0	0.916	0.913	0.910	0.906	0.906	0.896

05/26/1993 14:44 Filename: XAMPLE1.OUT Page 12

NON-DIM CLEARANCE DISTRIBUTION(H/C) FOR PAD NUMBER 3

I =		7	8	9	10	11	12
AXIAL LENGTH IN.		1.700	1.840	1.850	1.900	1.950	2.000
J	DEG.						
1	95.0	2.85	2.84	0.839	0.835	0.830	0.826
2	100.0	2.85	2.84	0.841	0.837	0.832	0.828
3	105.0	2.86	2.84	0.844	0.840	0.836	0.831
4	110.0	2.86	2.85	0.848	0.844	0.840	0.836
5	114.0	2.86	2.85	0.853	0.849	0.845	0.841
6	116.0	2.87	2.86	0.855	0.851	0.847	0.843
7	118.0	2.87	2.86	0.857	0.854	0.850	0.846
8	120.0	2.87	2.86	0.860	0.856	0.853	0.849
9	120.1	0.872	0.861	0.860	0.857	0.853	0.849
10	122.0	0.874	0.864	0.863	0.859	0.856	0.852
11	124.0	0.877	0.867	0.866	0.863	0.859	0.855
12	126.0	0.880	0.870	0.869	0.866	0.862	0.859
13	127.0	0.882	0.872	0.871	0.868	0.864	0.861
14	128.0	0.883	0.873	0.873	0.869	0.866	0.862
15	129.0	0.885	0.875	0.875	0.871	0.868	0.864
16	130.0	0.886	0.877	0.876	0.873	0.870	0.866

MIN. CLEAR.= 0.82613 AT 95.000 DEGREES

MAX. CLEAR.= 2.8934 AT 120.00 DEGREES

Figure 5-2 (Cont.)

05/26/1993 14:44 Filename: XAMPLE1.OUT Page 13

PRESSURE DISTRIBUTION (PSI) FOR PAD NUMBER 3

I =		1	2	3	4	5	6
AXIAL LENGTH IN.		1.250	1.300	1.350	1.400	1.410	1.550
J	DEG.						
1	95.0	0.000E+00	0.000E+00	0.000E+00	0.000E+00	0.000E+00	0.000E+00
2	100.0	0.000E+00	0.669E-01	0.311	1.09	1.41	1.35
3	105.0	0.000E+00	0.397	1.29	3.30	3.93	3.88
4	110.0	0.000E+00	1.31	3.42	6.96	7.91	7.97
5	114.0	0.000E+00	2.62	6.06	10.9	12.1	12.4
6	116.0	0.000E+00	3.42	7.59	13.1	14.4	14.9
7	118.0	0.000E+00	4.35	9.26	15.3	16.7	17.6
8	120.0	0.000E+00	5.27	10.8	17.4	19.1	20.5
9	120.1	0.000E+00	5.32	10.9	17.5	19.0	20.5
10	122.0	0.000E+00	5.89	11.3	16.6	17.4	20.2
11	124.0	0.000E+00	6.15	11.3	15.6	16.3	19.7
12	126.0	0.000E+00	6.01	10.7	14.5	15.0	18.8
13	127.0	0.000E+00	5.74	10.1	13.6	14.1	18.0
14	128.0	0.000E+00	5.14	9.06	12.1	12.6	16.5
15	129.0	0.000E+00	3.80	6.80	9.20	9.61	13.1
16	130.0	0.000E+00	0.000E+00	0.000E+00	0.000E+00	0.000E+00	0.000E+00

05/26/1993 14:44 Filename: XAMPLE1.OUT Page 14

PRESSURE DISTRIBUTION (PSI) FOR PAD NUMBER 3

I =		7	8	9	10	11	12
AXIAL LENGTH IN.		1.700	1.840	1.850	1.900	1.950	2.000
J	DEG.						
1	95.0	0.000E+00	0.000E+00	0.000E+00	0.000E+00	0.000E+00	0.000E+00
2	100.0	1.15	0.973	0.704	0.135	0.255E-02	0.000E+00
3	105.0	3.52	3.16	2.53	0.758	0.149	0.000E+00
4	110.0	7.62	7.14	6.10	2.49	0.743	0.000E+00
5	114.0	12.3	11.8	10.5	5.16	1.93	0.000E+00
6	116.0	15.1	14.7	13.1	6.84	2.70	0.000E+00
7	118.0	18.2	18.0	16.2	8.91	3.69	0.000E+00
8	120.0	21.6	21.7	19.7	11.5	5.10	0.000E+00
9	120.1	21.6	21.5	19.8	11.6	5.18	0.000E+00
10	122.0	21.2	19.4	18.5	12.4	6.13	0.000E+00
11	124.0	20.6	17.9	17.2	12.4	6.60	0.000E+00
12	126.0	19.8	16.8	16.1	12.0	6.66	0.000E+00
13	127.0	19.1	16.1	15.6	11.7	6.62	0.000E+00
14	128.0	17.9	15.3	14.8	11.3	6.50	0.000E+00
15	129.0	14.9	13.4	13.0	10.4	6.32	0.000E+00
16	130.0	0.000E+00	0.000E+00	0.000E+00	0.000E+00	0.000E+00	0.000E+00

MIN. PRESS= 0.00000E+00 AT 130.00 DEGREES

MAX. PRESS= 21.749 AT 120.00 DEGREES

Figure 5-2 (Cont.)

05/26/1993 14:44 Filename: XAMPLE1.OUT Page 15

NON-DIM CLEARANCE DISTRIBUTION(H/C) FOR PAD NUMBER 4

	I = 1	2	3	4	5	6
AXIAL LENGTH IN.	1.250	1.300	1.350	1.400	1.410	1.550
J DEG.						
1 140.0	0.930	0.927	0.924	0.921	2.92	2.91
2 145.0	0.937	0.935	0.932	0.930	2.93	2.92
3 150.0	0.945	0.943	0.941	0.939	2.94	2.93
4 155.0	0.954	0.952	0.950	0.948	2.95	2.94
5 159.0	0.961	0.959	0.958	0.956	2.96	2.95
6 161.0	0.964	0.963	0.962	0.960	2.96	2.96
7 163.0	0.968	0.967	0.966	0.964	2.96	2.96
8 165.0	0.972	0.971	0.970	0.968	2.97	2.96
9 165.1	0.972	0.971	0.970	0.969	0.968	0.965
10 167.0	0.975	0.974	0.973	0.973	0.972	0.970
11 169.0	0.979	0.978	0.978	0.977	0.977	0.974
12 171.0	0.983	0.982	0.982	0.981	0.981	0.979
13 172.0	0.985	0.984	0.984	0.983	0.983	0.981
14 173.0	0.987	0.986	0.986	0.985	0.985	0.984
15 174.0	0.989	0.988	0.988	0.987	0.987	0.986
16 175.0	0.990	0.990	0.990	0.989	0.989	0.988

05/26/1993 14:44 Filename: XAMPLE1.OUT Page 16

NON-DIM CLEARANCE DISTRIBUTION(H/C) FOR PAD NUMBER 4

	I = 7	8	9	10	11	12
AXIAL LENGTH IN.	1.700	1.840	1.850	1.900	1.950	2.000
J DEG.						
1 140.0	2.90	2.90	0.896	0.893	0.891	0.888
2 145.0	2.91	2.91	0.907	0.905	0.902	0.900
3 150.0	2.93	2.92	0.919	0.917	0.915	0.913
4 155.0	2.94	2.93	0.932	0.930	0.928	0.926
5 159.0	2.95	2.94	0.942	0.941	0.939	0.937
6 161.0	2.95	2.95	0.947	0.946	0.945	0.943
7 163.0	2.96	2.95	0.953	0.952	0.950	0.949
8 165.0	2.96	2.96	0.958	0.957	0.956	0.955
9 165.1	0.962	0.959	0.958	0.957	0.956	0.955
10 167.0	0.967	0.964	0.964	0.963	0.962	0.961
11 169.0	0.972	0.969	0.969	0.968	0.968	0.967
12 171.0	0.977	0.975	0.975	0.974	0.973	0.973
13 172.0	0.979	0.978	0.978	0.977	0.976	0.976
14 173.0	0.982	0.980	0.980	0.980	0.979	0.979
15 174.0	0.984	0.983	0.983	0.983	0.982	0.982
16 175.0	0.987	0.986	0.986	0.986	0.985	0.985

MIN. CLEAR.= 0.88781 AT 140.00 DEGREES

MAX. CLEAR.= 2.9682 AT 165.00 DEGREES

Figure 5-2 (Cont.)

05/26/1993 14:44 Filename: XAMPLE1.OUT Page 17

PRESSURE DISTRIBUTION (PSI) FOR PAD NUMBER 4

I =		1	2	3	4	5	6
AXIAL LENGTH IN.		1.250	1.300	1.350	1.400	1.410	1.550
J	DEG.						
1	140.0	0.000E+00	0.000E+00	0.000E+00	0.000E+00	0.000E+00	0.000E+00
2	145.0	0.000E+00	0.928E-02	0.217	0.896	1.16	1.13
3	150.0	0.000E+00	0.297	1.07	2.78	3.31	3.27
4	155.0	0.000E+00	1.12	2.94	5.96	6.75	6.82
5	159.0	0.000E+00	2.30	5.29	9.43	10.4	10.7
6	161.0	0.000E+00	3.02	6.66	11.4	12.5	13.0
7	163.0	0.000E+00	3.84	8.15	13.4	14.6	15.5
8	165.0	0.000E+00	4.64	9.50	15.3	16.8	18.1
9	165.1	0.000E+00	4.68	9.55	15.4	16.7	18.1
10	167.0	0.000E+00	5.14	9.91	14.5	15.2	17.7
11	169.0	0.000E+00	5.29	9.74	13.5	14.1	17.1
12	171.0	0.000E+00	5.07	9.09	12.3	12.8	16.1
13	172.0	0.000E+00	4.76	8.48	11.4	11.9	15.2
14	173.0	0.000E+00	4.17	7.42	9.98	10.4	13.6
15	174.0	0.000E+00	2.95	5.35	7.28	7.60	10.4
16	175.0	0.000E+00	0.000E+00	0.000E+00	0.000E+00	0.000E+00	0.000E+00

05/26/1993 14:44 Filename: XAMPLE1.OUT Page 18

PRESSURE DISTRIBUTION (PSI) FOR PAD NUMBER 4

I =		7	8	9	10	11	12
AXIAL LENGTH IN.		1.700	1.840	1.850	1.900	1.950	2.000
J	DEG.						
1	140.0	0.000E+00	0.000E+00	0.000E+00	0.000E+00	0.000E+00	0.000E+00
2	145.0	0.949	0.790	0.556	0.246E-01	-.864E-01	0.000E+00
3	150.0	2.95	2.62	2.09	0.559	0.317E-01	0.000E+00
4	155.0	6.49	6.03	5.16	2.11	0.606	0.000E+00
5	159.0	10.6	10.1	8.99	4.50	1.70	0.000E+00
6	161.0	13.1	12.7	11.4	6.02	2.41	0.000E+00
7	163.0	15.9	15.6	14.1	7.90	3.35	0.000E+00
8	165.0	19.0	19.0	17.2	10.1	4.59	0.000E+00
9	165.1	19.0	18.8	17.3	10.2	4.66	0.000E+00
10	167.0	18.5	16.7	15.9	10.7	5.39	0.000E+00
11	169.0	17.9	15.2	14.6	10.5	5.64	0.000E+00
12	171.0	16.9	14.1	13.5	10.0	5.54	0.000E+00
13	172.0	16.1	13.4	12.9	9.66	5.42	0.000E+00
14	173.0	14.7	12.4	12.0	9.10	5.20	0.000E+00
15	174.0	11.7	10.3	9.95	7.80	4.61	0.000E+00
16	175.0	0.000E+00	0.000E+00	0.000E+00	0.000E+00	0.000E+00	0.000E+00

MIN. PRESS= -0.86380E-01 AT 145.00 DEGREES

MAX. PRESS= 19.011 AT 165.00 DEGREES

Figure 5-2 (Cont.)

05/26/1993 14:44 Filename: XAMPLE1.OUT Page 19

NON-DIM CLEARANCE DISTRIBUTION(H/C) FOR PAD NUMBER 5

I =		1	2	3	4	5	6
AXIAL LENGTH IN.		1.250	1.300	1.350	1.400	1.410	1.550
J	DEG.						
1	185.0	1.01	1.01	1.01	1.01	3.01	3.01
2	190.0	1.02	1.02	1.02	1.02	3.02	3.02
3	195.0	1.03	1.03	1.03	1.03	3.03	3.04
4	200.0	1.04	1.04	1.04	1.04	3.04	3.05
5	204.0	1.04	1.05	1.05	1.05	3.05	3.06
6	206.0	1.05	1.05	1.05	1.05	3.05	3.06
7	208.0	1.05	1.05	1.06	1.06	3.06	3.06
8	210.0	1.05	1.06	1.06	1.06	3.06	3.07
9	210.1	1.05	1.06	1.06	1.06	1.06	1.07
10	212.0	1.06	1.06	1.06	1.06	1.07	1.07
11	214.0	1.06	1.06	1.07	1.07	1.07	1.08
12	216.0	1.06	1.07	1.07	1.07	1.07	1.08
13	217.0	1.07	1.07	1.07	1.07	1.07	1.08
14	218.0	1.07	1.07	1.07	1.08	1.08	1.08
15	219.0	1.07	1.07	1.07	1.08	1.08	1.09
16	220.0	1.07	1.07	1.08	1.08	1.08	1.09

05/26/1993 14:44 Filename: XAMPLE1.OUT Page 20

NON-DIM CLEARANCE DISTRIBUTION(H/C) FOR PAD NUMBER 5

I =		7	8	9	10	11	12
AXIAL LENGTH IN.		1.700	1.840	1.850	1.900	1.950	2.000
J	DEG.						
1	185.0	3.01	3.01	1.01	1.01	1.01	1.02
2	190.0	3.03	3.03	1.03	1.03	1.03	1.03
3	195.0	3.04	3.04	1.04	1.04	1.04	1.05
4	200.0	3.05	3.05	1.06	1.06	1.06	1.06
5	204.0	3.06	3.07	1.07	1.07	1.07	1.07
6	206.0	3.07	3.07	1.07	1.07	1.07	1.08
7	208.0	3.07	3.08	1.08	1.08	1.08	1.08
8	210.0	3.07	3.08	1.08	1.08	1.09	1.09
9	210.1	1.07	1.08	1.08	1.08	1.09	1.09
10	212.0	1.08	1.09	1.09	1.09	1.09	1.09
11	214.0	1.08	1.09	1.09	1.09	1.10	1.10
12	216.0	1.09	1.09	1.09	1.10	1.10	1.10
13	217.0	1.09	1.10	1.10	1.10	1.10	1.11
14	218.0	1.09	1.10	1.10	1.10	1.10	1.11
15	219.0	1.09	1.10	1.10	1.10	1.11	1.11
16	220.0	1.10	1.10	1.10	1.11	1.11	1.11

MIN. CLEAR.= 1.0095 AT 185.00 DEGREES

MAX. CLEAR.= 3.0803 AT 210.00 DEGREES

Figure 5-2 (Cont.)

05/26/1993 14:44 Filename: XAMPLE1.OUT Page 21

PRESSURE DISTRIBUTION (PSI) FOR PAD NUMBER 5

	I =	1	2	3	4	5	6
	AXIAL LENGTH IN.	1.250	1.300	1.350	1.400	1.410	1.550
J	DEG.						
1	185.0	0.000E+00	0.000E+00	0.000E+00	0.000E+00	0.000E+00	0.000E+00
2	190.0	0.000E+00	0.219E-01	0.221	0.791	1.00	0.978
3	195.0	0.000E+00	0.324	1.02	2.41	2.82	2.81
4	200.0	0.000E+00	1.09	2.69	5.14	5.77	5.85
5	204.0	0.000E+00	2.14	4.74	8.16	8.97	9.25
6	206.0	0.000E+00	2.78	5.94	9.87	10.8	11.2
7	208.0	0.000E+00	3.49	7.23	11.7	12.7	13.4
8	210.0	0.000E+00	4.16	8.37	13.3	14.6	15.8
9	210.1	0.000E+00	4.19	8.42	13.4	14.5	15.8
10	212.0	0.000E+00	4.54	8.66	12.6	13.2	15.4
11	214.0	0.000E+00	4.60	8.43	11.6	12.1	14.8
12	216.0	0.000E+00	4.31	7.74	10.5	10.9	13.8
13	217.0	0.000E+00	3.99	7.13	9.58	9.97	12.8
14	218.0	0.000E+00	3.41	6.11	8.22	8.56	11.3
15	219.0	0.000E+00	2.33	4.24	5.78	6.04	8.27
16	220.0	0.000E+00	0.000E+00	0.000E+00	0.000E+00	0.000E+00	0.000E+00

05/26/1993 14:44 Filename: XAMPLE1.OUT Page 22

PRESSURE DISTRIBUTION (PSI) FOR PAD NUMBER 5

	I =	7	8	9	10	11	12
	AXIAL LENGTH IN.	1.700	1.840	1.850	1.900	1.950	2.000
J	DEG.						
1	185.0	0.000E+00	0.000E+00	0.000E+00	0.000E+00	0.000E+00	0.000E+00
2	190.0	0.830	0.688	0.506	0.488E-01	-.660E-01	0.000E+00
3	195.0	2.54	2.24	1.84	0.599	0.101	0.000E+00
4	200.0	5.56	5.13	4.46	2.03	0.693	0.000E+00
5	204.0	9.12	8.63	7.74	4.12	1.69	0.000E+00
6	206.0	11.3	10.8	9.80	5.46	2.34	0.000E+00
7	208.0	13.8	13.4	12.2	7.10	3.18	0.000E+00
8	210.0	16.5	16.3	14.8	8.94	4.21	0.000E+00
9	210.1	16.5	16.1	14.9	9.03	4.26	0.000E+00
10	212.0	16.0	14.3	13.6	9.30	4.76	0.000E+00
11	214.0	15.4	12.9	12.4	8.98	4.84	0.000E+00
12	216.0	14.4	11.8	11.3	8.39	4.64	0.000E+00
13	217.0	13.5	11.1	10.7	7.99	4.47	0.000E+00
14	218.0	12.1	10.0	9.67	7.33	4.15	0.000E+00
15	219.0	9.18	7.89	7.62	5.88	3.40	0.000E+00
16	220.0	0.000E+00	0.000E+00	0.000E+00	0.000E+00	0.000E+00	0.000E+00

MIN. PRESS= -0.65974E-01 AT 190.00 DEGREES

MAX. PRESS= 16.527 AT 210.00 DEGREES

Figure 5-2 (Cont.)

05/26/1993 14:44 Filename: XAMPLE1.OUT Page 23

NON-DIM CLEARANCE DISTRIBUTION(H/C) FOR PAD NUMBER 6

I =		1	2	3	4	5	6
AXIAL LENGTH IN.		1.250	1.300	1.350	1.400	1.410	1.550
J	DEG.						
1	230.0	1.08	1.09	1.09	1.09	3.09	3.10
2	235.0	1.09	1.09	1.10	1.10	3.10	3.11
3	240.0	1.09	1.10	1.10	1.11	3.11	3.12
4	245.0	1.10	1.10	1.11	1.11	3.11	3.12
5	249.0	1.10	1.11	1.11	1.11	3.11	3.13
6	251.0	1.10	1.11	1.11	1.12	3.12	3.13
7	253.0	1.10	1.11	1.11	1.12	3.12	3.13
8	255.0	1.11	1.11	1.11	1.12	3.12	3.13
9	255.1	1.11	1.11	1.11	1.12	1.12	1.13
10	257.0	1.11	1.11	1.11	1.12	1.12	1.13
11	259.0	1.11	1.11	1.12	1.12	1.12	1.13
12	261.0	1.11	1.11	1.12	1.12	1.12	1.13
13	262.0	1.11	1.11	1.12	1.12	1.12	1.13
14	263.0	1.11	1.11	1.12	1.12	1.12	1.13
15	264.0	1.11	1.11	1.12	1.12	1.12	1.13
16	265.0	1.11	1.11	1.12	1.12	1.12	1.13

05/26/1993 14:44 Filename: XAMPLE1.OUT Page 24

NON-DIM CLEARANCE DISTRIBUTION(H/C) FOR PAD NUMBER 6

I =		7	8	9	10	11	12
AXIAL LENGTH IN.		1.700	1.840	1.850	1.900	1.950	2.000
J	DEG.						
1	230.0	3.11	3.12	1.12	1.13	1.13	1.13
2	235.0	3.12	3.13	1.13	1.14	1.14	1.14
3	240.0	3.13	3.14	1.14	1.14	1.15	1.15
4	245.0	3.13	3.15	1.15	1.15	1.15	1.16
5	249.0	3.14	3.15	1.15	1.15	1.16	1.16
6	251.0	3.14	3.15	1.15	1.16	1.16	1.17
7	253.0	3.14	3.15	1.15	1.16	1.16	1.17
8	255.0	3.14	3.16	1.16	1.16	1.16	1.17
9	255.1	1.14	1.16	1.16	1.16	1.16	1.17
10	257.0	1.14	1.16	1.16	1.16	1.17	1.17
11	259.0	1.15	1.16	1.16	1.16	1.17	1.17
12	261.0	1.15	1.16	1.16	1.16	1.17	1.17
13	262.0	1.15	1.16	1.16	1.16	1.17	1.17
14	263.0	1.15	1.16	1.16	1.16	1.17	1.17
15	264.0	1.15	1.16	1.16	1.16	1.17	1.17
16	265.0	1.15	1.16	1.16	1.17	1.17	1.17

MIN. CLEAR.= 1.0836 AT 230.00 DEGREES

MAX. CLEAR.= 3.1551 AT 255.00 DEGREES

Figure 5-2 (Cont.)

05/26/1993 14:44 Filename: XAMPLE1.OUT Page 25

PRESSURE DISTRIBUTION (PSI) FOR PAD NUMBER 6

I =		1	2	3	4	5	6
AXIAL LENGTH IN.		1.250	1.300	1.350	1.400	1.410	1.550
J	DEG.						
1	230.0	0.000E+00	0.000E+00	0.000E+00	0.000E+00	0.000E+00	0.000E+00
2	235.0	0.000E+00	0.775E-01	0.289	0.796	0.970	0.955
3	240.0	0.000E+00	0.418	1.11	2.33	2.68	2.68
4	245.0	0.000E+00	1.18	2.70	4.86	5.40	5.49
5	249.0	0.000E+00	2.17	4.60	7.64	8.35	8.62
6	251.0	0.000E+00	2.76	5.71	9.23	10.0	10.5
7	253.0	0.000E+00	3.41	6.89	10.9	11.8	12.5
8	255.0	0.000E+00	4.01	7.93	12.4	13.6	14.7
9	255.1	0.000E+00	4.03	7.97	12.5	13.5	14.7
10	257.0	0.000E+00	4.33	8.17	11.7	12.3	14.4
11	259.0	0.000E+00	4.36	7.93	10.9	11.3	13.9
12	261.0	0.000E+00	4.05	7.24	9.75	10.1	12.8
13	262.0	0.000E+00	3.73	6.63	8.89	9.25	11.9
14	263.0	0.000E+00	3.16	5.64	7.57	7.89	10.4
15	264.0	0.000E+00	2.12	3.86	5.25	5.48	7.50
16	265.0	0.000E+00	0.000E+00	0.000E+00	0.000E+00	0.000E+00	0.000E+00

05/26/1993 14:44 Filename: XAMPLE1.OUT Page 26

PRESSURE DISTRIBUTION (PSI) FOR PAD NUMBER 6

I =		7	8	9	10	11	12
AXIAL LENGTH IN.		1.700	1.840	1.850	1.900	1.950	2.000
J	DEG.						
1	230.0	0.000E+00	0.000E+00	0.000E+00	0.000E+00	0.000E+00	0.000E+00
2	235.0	0.824	0.693	0.546	0.145	0.913E-02	0.000E+00
3	240.0	2.44	2.16	1.83	0.754	0.235	0.000E+00
4	245.0	5.22	4.81	4.25	2.15	0.846	0.000E+00
5	249.0	8.49	8.02	7.25	4.08	1.79	0.000E+00
6	251.0	10.5	10.0	9.14	5.31	2.40	0.000E+00
7	253.0	12.8	12.4	11.4	6.82	3.18	0.000E+00
8	255.0	15.4	15.1	13.7	8.46	4.09	0.000E+00
9	255.1	15.4	14.9	13.8	8.53	4.13	0.000E+00
10	257.0	14.9	13.2	12.6	8.71	4.53	0.000E+00
11	259.0	14.3	12.0	11.5	8.38	4.55	0.000E+00
12	261.0	13.4	10.9	10.5	7.79	4.33	0.000E+00
13	262.0	12.5	10.2	9.83	7.38	4.14	0.000E+00
14	263.0	11.1	9.17	8.83	6.70	3.80	0.000E+00
15	264.0	8.28	7.06	6.81	5.24	3.01	0.000E+00
16	265.0	0.000E+00	0.000E+00	0.000E+00	0.000E+00	0.000E+00	0.000E+00

MIN. PRESS= 0.00000E+00 AT 265.00 DEGREES

MAX. PRESS= 15.374 AT 255.00 DEGREES

Figure 5-2 (Cont.)

05/26/1993 14:44 Filename: XAMPLE1.OUT Page 27

NON-DIM CLEARANCE DISTRIBUTION(H/C) FOR PAD NUMBER 7

	I =	1	2	3	4	5	6
AXIAL LENGTH IN.		1.250	1.300	1.350	1.400	1.410	1.550
J	DEG.						
1	275.0	1.11	1.11	1.12	1.12	3.12	3.13
2	280.0	1.11	1.11	1.12	1.12	3.12	3.13
3	285.0	1.11	1.11	1.11	1.12	3.12	3.13
4	290.0	1.10	1.11	1.11	1.11	3.12	3.13
5	294.0	1.10	1.10	1.11	1.11	3.11	3.12
6	296.0	1.10	1.10	1.11	1.11	3.11	3.12
7	298.0	1.10	1.10	1.10	1.11	3.11	3.12
8	300.0	1.09	1.10	1.10	1.11	3.11	3.12
9	300.1	1.09	1.10	1.10	1.11	1.11	1.12
10	302.0	1.09	1.10	1.10	1.10	1.10	1.11
11	304.0	1.09	1.09	1.10	1.10	1.10	1.11
12	306.0	1.09	1.09	1.10	1.10	1.10	1.11
13	307.0	1.09	1.09	1.09	1.10	1.10	1.11
14	308.0	1.09	1.09	1.09	1.10	1.10	1.11
15	309.0	1.08	1.09	1.09	1.09	1.10	1.11
16	310.0	1.08	1.09	1.09	1.09	1.09	1.10

05/26/1993 14:44 Filename: XAMPLE1.OUT Page 28

NON-DIM CLEARANCE DISTRIBUTION(H/C) FOR PAD NUMBER 7

	I =	7	8	9	10	11	12
AXIAL LENGTH IN.		1.700	1.840	1.850	1.900	1.950	2.000
J	DEG.						
1	275.0	3.15	3.16	1.16	1.17	1.17	1.17
2	280.0	3.15	3.16	1.16	1.16	1.17	1.17
3	285.0	3.14	3.16	1.16	1.16	1.16	1.17
4	290.0	3.14	3.15	1.15	1.16	1.16	1.16
5	294.0	3.14	3.15	1.15	1.15	1.16	1.16
6	296.0	3.13	3.14	1.15	1.15	1.15	1.16
7	298.0	3.13	3.14	1.14	1.15	1.15	1.15
8	300.0	3.13	3.14	1.14	1.14	1.15	1.15
9	300.1	1.13	1.14	1.14	1.14	1.15	1.15
10	302.0	1.13	1.14	1.14	1.14	1.14	1.15
11	304.0	1.12	1.13	1.13	1.14	1.14	1.14
12	306.0	1.12	1.13	1.13	1.13	1.14	1.14
13	307.0	1.12	1.13	1.13	1.13	1.14	1.14
14	308.0	1.12	1.13	1.13	1.13	1.13	1.14
15	309.0	1.12	1.12	1.13	1.13	1.13	1.14
16	310.0	1.11	1.12	1.12	1.13	1.13	1.13

MIN. CLEAR.= 1.0836 AT 310.00 DEGREES

MAX. CLEAR.= 3.1600 AT 275.00 DEGREES

Figure 5-2 (Cont.)

05/26/1993 14:44 Filename: XAMPLE1.OUT Page 29

PRESSURE DISTRIBUTION (PSI) FOR PAD NUMBER 7

I =		1	2	3	4	5	6
AXIAL LENGTH IN.		1.250	1.300	1.350	1.400	1.410	1.550
J	DEG.						
1	275.0	0.000E+00	0.000E+00	0.000E+00	0.000E+00	0.000E+00	0.000E+00
2	280.0	0.000E+00	0.141	0.381	0.887	1.06	1.04
3	285.0	0.000E+00	0.532	1.28	2.51	2.86	2.86
4	290.0	0.000E+00	1.34	2.94	5.13	5.67	5.76
5	294.0	0.000E+00	2.36	4.90	7.98	8.68	8.96
6	296.0	0.000E+00	2.97	6.03	9.59	10.4	10.8
7	298.0	0.000E+00	3.63	7.23	11.3	12.2	12.9
8	300.0	0.000E+00	4.24	8.29	12.9	14.0	15.2
9	300.1	0.000E+00	4.27	8.33	12.9	13.9	15.2
10	302.0	0.000E+00	4.59	8.57	12.2	12.8	14.9
11	304.0	0.000E+00	4.64	8.37	11.4	11.9	14.5
12	306.0	0.000E+00	4.35	7.71	10.3	10.7	13.5
13	307.0	0.000E+00	4.03	7.11	9.48	9.86	12.7
14	308.0	0.000E+00	3.44	6.09	8.14	8.47	11.1
15	309.0	0.000E+00	2.35	4.23	5.72	5.97	8.14
16	310.0	0.000E+00	0.000E+00	0.000E+00	0.000E+00	0.000E+00	0.000E+00

05/26/1993 14:44 Filename: XAMPLE1.OUT Page 30

PRESSURE DISTRIBUTION (PSI) FOR PAD NUMBER 7

I =		7	8	9	10	11	12
AXIAL LENGTH IN.		1.700	1.840	1.850	1.900	1.950	2.000
J	DEG.						
1	275.0	0.000E+00	0.000E+00	0.000E+00	0.000E+00	0.000E+00	0.000E+00
2	280.0	0.912	0.781	0.643	0.253	0.879E-01	0.000E+00
3	285.0	2.62	2.34	2.02	0.948	0.367	0.000E+00
4	290.0	5.50	5.09	4.54	2.42	1.02	0.000E+00
5	294.0	8.84	8.38	7.61	4.41	2.00	0.000E+00
6	296.0	10.9	10.4	9.54	5.66	2.63	0.000E+00
7	298.0	13.2	12.8	11.8	7.19	3.42	0.000E+00
8	300.0	15.8	15.6	14.2	8.87	4.35	0.000E+00
9	300.1	15.8	15.4	14.3	8.95	4.40	0.000E+00
10	302.0	15.5	13.8	13.2	9.18	4.83	0.000E+00
11	304.0	15.0	12.6	12.1	8.90	4.89	0.000E+00
12	306.0	14.1	11.6	11.2	8.37	4.70	0.000E+00
13	307.0	13.3	11.0	10.6	7.99	4.53	0.000E+00
14	308.0	11.9	9.95	9.59	7.33	4.21	0.000E+00
15	309.0	9.03	7.79	7.53	5.85	3.42	0.000E+00
16	310.0	0.000E+00	0.000E+00	0.000E+00	0.000E+00	0.000E+00	0.000E+00

MIN. PRESS= 0.00000E+00 AT 310.00 DEGREES

MAX. PRESS= 15.844 AT 300.00 DEGREES

Figure 5-2 (Cont.)

05/26/1993 14:44 Filename: XAMPLE1.OUT Page 31

NON-DIM CLEARANCE DISTRIBUTION(H/C) FOR PAD NUMBER 8

I =		1	2	3	4	5	6
AXIAL LENGTH IN.		1.250	1.300	1.350	1.400	1.410	1.550
J	DEG.						
1	320.0	1.07	1.07	1.08	1.08	3.08	3.09
2	325.0	1.06	1.07	1.07	1.07	3.07	3.08
3	330.0	1.05	1.06	1.06	1.06	3.06	3.07
4	335.0	1.05	1.05	1.05	1.05	3.05	3.06
5	339.0	1.04	1.04	1.04	1.04	3.04	3.05
6	341.0	1.04	1.04	1.04	1.04	3.04	3.04
7	343.0	1.03	1.03	1.03	1.04	3.04	3.04
8	345.0	1.03	1.03	1.03	1.03	3.03	3.04
9	345.1	1.03	1.03	1.03	1.03	1.03	1.03
10	347.0	1.02	1.03	1.03	1.03	1.03	1.03
11	349.0	1.02	1.02	1.02	1.02	1.02	1.03
12	351.0	1.02	1.02	1.02	1.02	1.02	1.02
13	352.0	1.02	1.02	1.02	1.02	1.02	1.02
14	353.0	1.01	1.01	1.01	1.01	1.01	1.02
15	354.0	1.01	1.01	1.01	1.01	1.01	1.01
16	355.0	1.01	1.01	1.01	1.01	1.01	1.01

05/26/1993 14:44 Filename: XAMPLE1.OUT Page 32

NON-DIM CLEARANCE DISTRIBUTION(H/C) FOR PAD NUMBER 8

I =		7	8	9	10	11	12
AXIAL LENGTH IN.		1.700	1.840	1.850	1.900	1.950	2.000
J	DEG.						
1	320.0	3.10	3.10	1.10	1.11	1.11	1.11
2	325.0	3.09	3.09	1.09	1.10	1.10	1.10
3	330.0	3.07	3.08	1.08	1.08	1.09	1.09
4	335.0	3.06	3.07	1.07	1.07	1.07	1.07
5	339.0	3.05	3.06	1.06	1.06	1.06	1.06
6	341.0	3.05	3.05	1.05	1.05	1.06	1.06
7	343.0	3.04	3.05	1.05	1.05	1.05	1.05
8	345.0	3.04	3.04	1.04	1.04	1.04	1.05
9	345.1	1.04	1.04	1.04	1.04	1.04	1.04
10	347.0	1.03	1.04	1.04	1.04	1.04	1.04
11	349.0	1.03	1.03	1.03	1.03	1.03	1.03
12	351.0	1.02	1.03	1.03	1.03	1.03	1.03
13	352.0	1.02	1.02	1.02	1.02	1.02	1.02
14	353.0	1.02	1.02	1.02	1.02	1.02	1.02
15	354.0	1.02	1.02	1.02	1.02	1.02	1.02
16	355.0	1.01	1.01	1.01	1.01	1.01	1.02

MIN. CLEAR.= 1.0095 AT 355.00 DEGREES

MAX. CLEAR.= 3.1032 AT 320.00 DEGREES

Figure 5-2 (Cont.)

PRESSURE DISTRIBUTION (PSI) FOR PAD NUMBER 8

I =		1	2	3	4	5	6
AXIAL LENGTH IN.		1.250	1.300	1.350	1.400	1.410	1.550
J	DEG.						
1	320.0	0.000E+00	0.000E+00	0.000E+00	0.000E+00	0.000E+00	0.000E+00
2	325.0	0.000E+00	0.192	0.466	1.04	1.23	1.21
3	330.0	0.000E+00	0.635	1.49	2.91	3.31	3.30
4	335.0	0.000E+00	1.53	3.36	5.87	6.50	6.59
5	339.0	0.000E+00	2.67	5.55	9.06	9.87	10.2
6	341.0	0.000E+00	3.35	6.80	10.9	11.8	12.3
7	343.0	0.000E+00	4.09	8.14	12.7	13.8	14.5
8	345.0	0.000E+00	4.80	9.35	14.5	15.8	17.0
9	345.1	0.000E+00	4.84	9.40	14.5	15.7	17.0
10	347.0	0.000E+00	5.24	9.74	13.9	14.5	16.8
11	349.0	0.000E+00	5.37	9.62	13.1	13.6	16.5
12	351.0	0.000E+00	5.14	9.03	12.0	12.5	15.7
13	352.0	0.000E+00	4.82	8.43	11.2	11.6	14.9
14	353.0	0.000E+00	4.22	7.38	9.81	10.2	13.3
15	354.0	0.000E+00	2.98	5.30	7.13	7.44	10.1
16	355.0	0.000E+00	0.000E+00	0.000E+00	0.000E+00	0.000E+00	0.000E+00

PRESSURE DISTRIBUTION (PSI) FOR PAD NUMBER 8

I =		7	8	9	10	11	12
AXIAL LENGTH IN.		1.700	1.840	1.850	1.900	1.950	2.000
J	DEG.						
1	320.0	0.000E+00	0.000E+00	0.000E+00	0.000E+00	0.000E+00	0.000E+00
2	325.0	1.06	0.924	0.769	0.345	0.153	0.000E+00
3	330.0	3.03	2.74	2.37	1.14	0.475	0.000E+00
4	335.0	6.31	5.89	5.25	2.80	1.20	0.000E+00
5	339.0	10.1	9.61	8.72	5.04	2.30	0.000E+00
6	341.0	12.4	11.9	10.9	6.44	2.99	0.000E+00
7	343.0	14.9	14.6	13.4	8.15	3.88	0.000E+00
8	345.0	17.8	17.7	16.2	10.1	4.96	0.000E+00
9	345.1	17.8	17.5	16.2	10.2	5.02	0.000E+00
10	347.0	17.6	15.8	15.1	10.6	5.60	0.000E+00
11	349.0	17.2	14.7	14.2	10.4	5.79	0.000E+00
12	351.0	16.5	13.8	13.3	10.0	5.70	0.000E+00
13	352.0	15.8	13.2	12.7	9.70	5.58	0.000E+00
14	353.0	14.4	12.2	11.8	9.14	5.34	0.000E+00
15	354.0	11.4	10.1	9.75	7.73	4.66	0.000E+00
16	355.0	0.000E+00	0.000E+00	0.000E+00	0.000E+00	0.000E+00	0.000E+00

MIN. PRESS= 0.00000E+00 AT 355.00 DEGREES

MAX. PRESS= 17.793 AT 345.00 DEGREES

```
RAYLEIGH STEP SEAL  EXAMPLE #1
  GFACE

  -JOURNAL POSITION & FORCES

    MINIMUM CLEARANCE      =    0.000165 IN
    LOAD CAPACITY          =   39.43     LB
    MOMENT ABOUT X-X       =    6.680    IN-LB
    MOMENT ABOUT Y-Y       =   -1.503    IN-LB

    POWER LOSS             =  0.1527E-01 HP

    LEAKAGE AT INNER       = -0.6470E-06 LB/S
    LEAKAGE AT OUTER       =  0.1003E-05 LB/S

  -STIFFNESS COEFFICIENTS
    PRINCIPAL  Z      KZZ =  0.2805E+06 LB/IN
    CROSS-COUPLED     KZA =  0.5135E+05 LB/RAD
    CROSS-COUPLED     KZB =  -5180.     LB/RAD
    CROSS-COUPLED     KAZ =  0.5199E+05 IN-LB/IN
    PRINCIPAL  A      KAA =  0.3825E+06 IN-LB/RAD
    CROSS-COUPLED     KAB =  0.4896E+05 IN-LB/RAD
    CROSS-COUPLED     KBZ = -0.1025E+05 IN-LB/IN
    CROSS-COUPLED     KBA = -0.5135E+05 IN-LB/RAD
    PRINCIPAL  B      KBB =  0.3771E+06 IN-LB/RAD

  -DAMPING COEFFICIENTS
    PRINCIPAL  Z      DZZ =   17.97     LB-S/IN
    CROSS-COUPLED     DZA =  -18.28     LB-S/RAD
    CROSS-COUPLED     DZB =  -6.224     LB-S/RAD
    CROSS-COUPLED     DAZ =  -19.62     IN-LB-S/IN
    PRINCIPAL  A      DAA =   19.59     IN-LB-S/RAD
    CROSS-COUPLED     DAB =  -89.65     IN-LB-S/RAD
    CROSS-COUPLED     DBZ =  0.1520E-02 IN-LB-S/IN
    CROSS-COUPLED     DBA =   90.14     IN-LB-S/RAD
    PRINCIPAL  B      DBB =   24.25     IN-LB-S/RAD
```

Figure 5-2 (Cont.)

```
RAYLEIGH STEP SEAL  EXAMPLE #1
  GFACE

  ECHO OF INPUT

 NO MORE INPUT, PROGRAM TERMINATED
```

Figure 5-2 (Cont.)

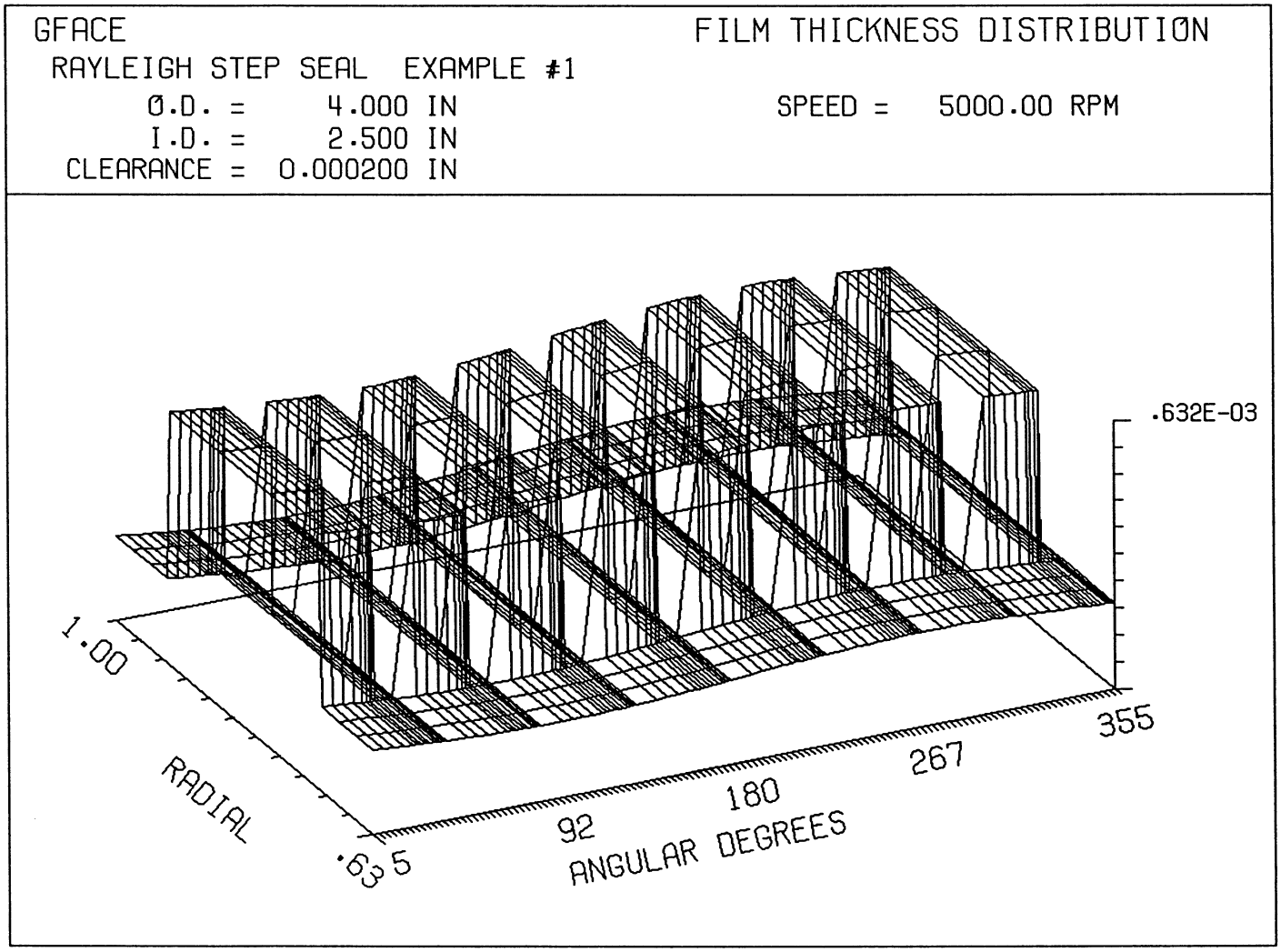

Figure 5-3 Sample Problem 1, Rayleigh-Step Seal, Clearance Distribution

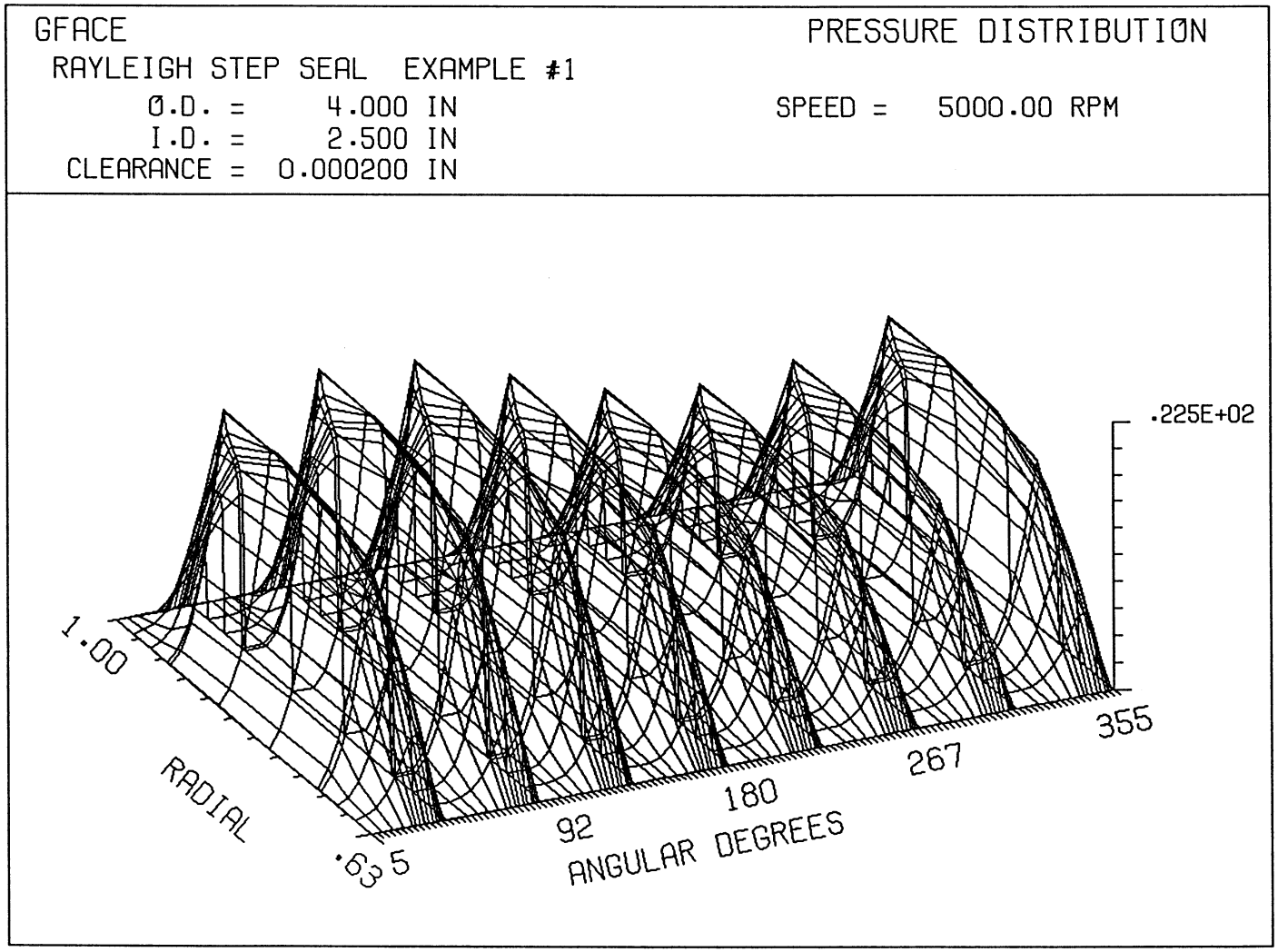

Figure 5-4 Sample Problem 1, Rayleigh-Step Seal, Pressure Distribution

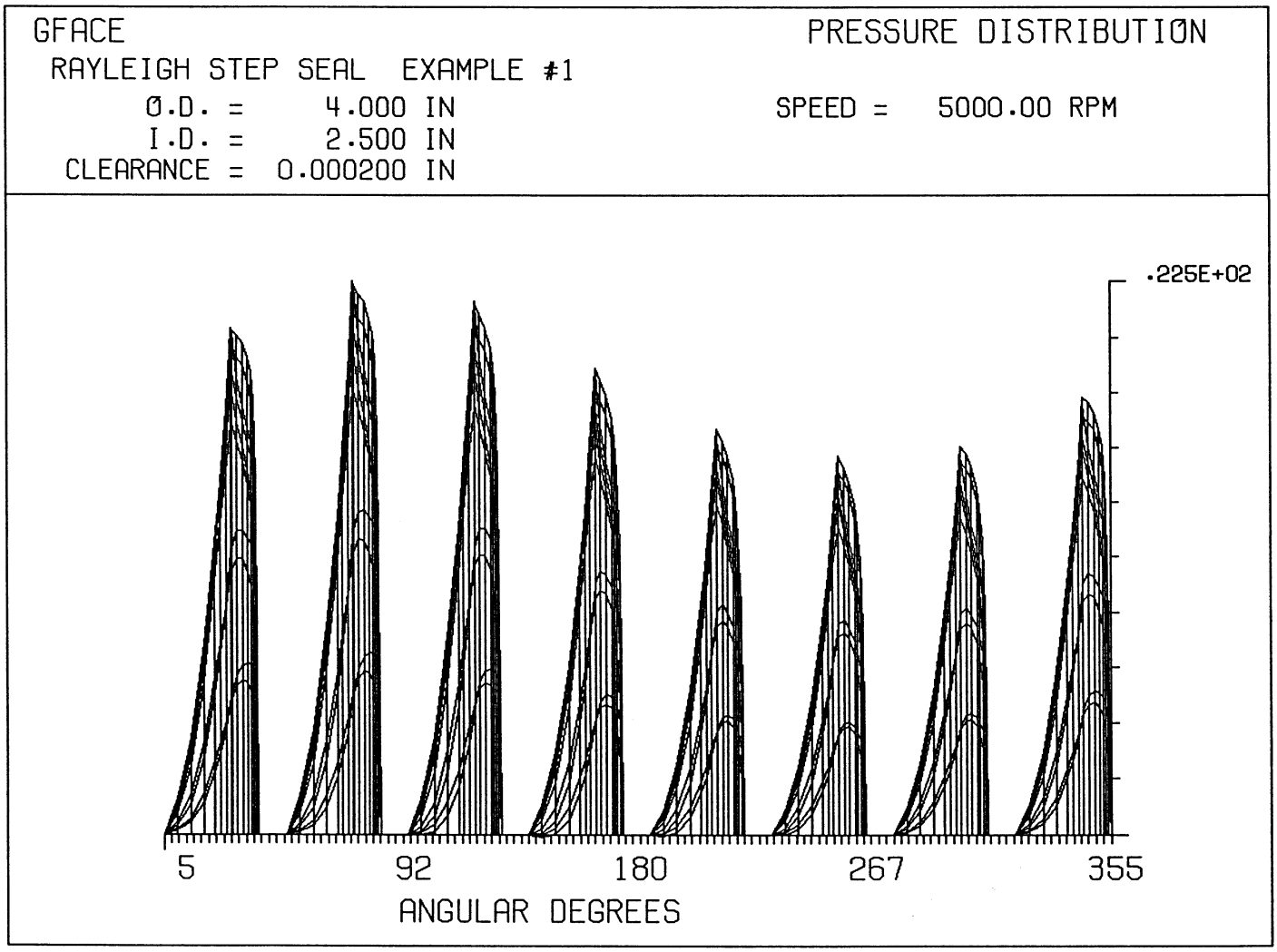

Figure 5-5 Sample Problem 1, Rayleigh-Step Seal, Pressure Distribution, Looking Along Radius

5.2 Tapered Land Seal

A single sector of a 16 pad tapered land seal was analyzed. Periodic boundary conditions were applied with the JOINED input parameter. The case was identified as XAMPLE2B by the first line in the input file. Figure 5-6 shows the grid network layout of the pad. High pressure at the top flows through a radial groove into the tapered region and also into a circumferential groove that circumvents the complete seal. The slope of the taper is 0.05209. Other parameters are as follows:

OPTION	2 Signifies that the load will be supplied and the axial position determined.
LOAD	13 lbs is the load to be balanced
STIFFNESS	0.0001 A non synchronous, frequency independent stiffness is desired.
NPAD	1 One of the 16 pads is modeled, with periodic conditions along the radial boundaries.
OUTER	4.5 = the outer diameter ,in.
INNER	3.793 = the inner diameter, in.
CLEARANCE	= 0.0002 in. = Initial guess at the axial clearance to support the given load.
START	= 67.5 degrees = start angle of pad
PADANGLE	= 22.5 degrees = angular extent of pad
GRIDN	= 37 = number of grid points in the θ direction
GRIDM	= 15 = Number of grid points in the radial direction
CTAPER	= 1 = Number of circumferential tapers in the grid Slope of taper = 0.05209 Lower left corner of taper, I = 8, J=21 Upper right corner of taper, I=14, J=35
VISCOSITY	1.75×10^{-9} lb-s/in^2
GASCONST	= gas constant = 423,184 in^2/s^2/^{o}F
JOINED	Periodic boundaries apply
ITERATION	= 15, 15 = maximum iterations for pressure and load convergence
TOLERANCE	.020, .020 = tolerances on pressure and load convergence
SPEED	50,000 rpm
PO	= 14.7 = reference or ambient pressure, psig

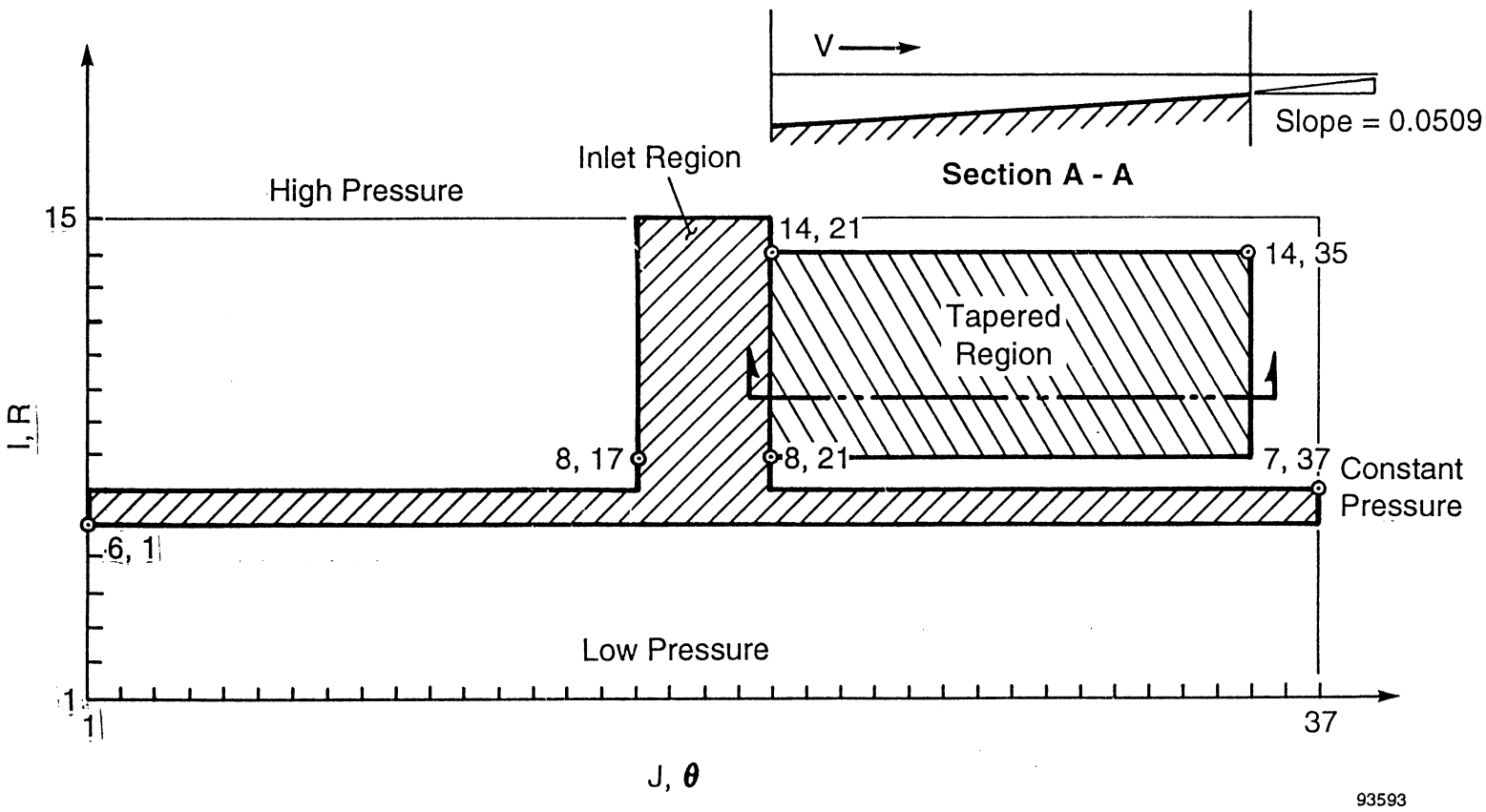

Figure 5-6 Sample Problem 2, Tapered Land Seal, Grid Regions

PLEFT	= 0. = Pressure on left radial boundary. Since periodic boundary conditions apply PLEFT has no consequence.
PRITE	= 0. = Pressure on right radial boundary. Since periodic boundary conditions apply PRITE has no consequence.
PTOP	= 50 psig = pressure boundary at outer radius, I=M
PBOT	= 0 psig = pressure boundary at inner radius, I=1

In this example, the groove pressures were inputted at each grid point with a specified pressure of 50 psig. The input for this problem is shown on Fig. 5-7. Note that there are 109 pressure points that had to be inputted with its I,J location in the grid and its pressure value of 50 psig. The program output is indicated on Fig. 5-8. On page 10 of the output the load capacity and operating clearance are produced. The computed load is 13.08 lbs as compared to the 13 lbs specified, which is well within the tolerance. The computed clearance is 0.000296 in. Plots of the clearance and pressure distribution are indicated on Figures 5-9 and 5-10.

```
XAMPLE2B
SINGLE TAPERED LAND SEAL
OPTION     2
LOAD       13.0
STIFFNESS  0.0001
NPAD       1
OUTER      4.505
INNER      3.793
CLEARANCE  0.0002
START      67.5
PADANGLE   22.5
GRIDN      37.
GRIDM      15.
CTAPER     1.
.05209   8 21 14 35
VISCOSITY  1.75E-09
ABSTEMP    576.
GASCONST   423184.
JOINED
ITERATION  15  15
TOLERANCE  .020  .02
SPEED      50000.
PO         14.7
PLEFT      0.0
PRITE      0.0
PTOP       50.
PBOT       0.0
PRESSURE   109.
8 17 50.
9 17 50.
10 17 50.
11 17 50.
12 17 50.
13 17 50.
14 17 50.
8 18 50.
9 18 50.
10 18 50.
11 18 50.
12 18 50.
13 18 50.
14 18 50.
8 19 50.
9 19 50.
10 19 50.
11 19 50.
12 19 50.
13 19 50.
14 19 50.
8 20 50.
9 20 50.
10 20 50.
11 20 50.
12 20 50.
13 20 50.
14 20 50.
8 21 50.
9 21 50.
10 21 50.
11 21 50.
12 21 50.
13 21 50.
14 21 50.
7 1 50.
7 2 50.
7 3 50.
```



```
7 4 50.
7 5 50.
7 6 50.
7 7 50.
7 8 50.
7 9 50.
7 10 50.
7 11 50.
7 12 50.
7 13 50.
7 14 50.
7 15 50.
7 16 50.
7 17 50.
7 18 50.
7 19 50.
7 20 50.
7 21 50.
7 22 50.
7 23 50.
7 24 50.
7 25 50.
7 26 50.
7 27 50.
7 28 50.
7 29 50.
7 30 50.
7 31 50.
7 32 50.
7 33 50.
7 34 50.
7 35 50.
7 36 50.
7 37 50.
6 1 50.
6 2 50.
6 3 50.
6 4 50.
6 5 50.
6 6 50.
6 7 50.
6 8 50.
6 9 50.
6 10 50.
6 11 50.
6 12 50.
6 13 50.
6 14 50.
6 15 50.
6 16 50.
6 17 50.
6 18 50.
6 19 50.
6 20 50.
6 21 50.
6 22 50.
6 23 50.
6 24 50.
6 25 50.
6 26 50.
6 27 50.
6 28 50.
6 29 50.
6 30 50.
6 31 50.
6 32 50.
```

Figure 5-7 Sample Problem 2, Tapered Land Seal, Grid Point Constant Pressures, Input File

```
6 33 50.
6 34 50.
6 35 50.
6 36 50.
6 37 50.
END
```

Figure 5-7 (Cont.)

```
06/02/1993  10:14        Filename: XAMPLE2B.OUT                    Page   1


SINGLE TAPERED LAND SEAL
  GFACE

  ECHO OF INPUT

  OPTION     =    2          GIVEN LOAD FIND CLEARANCE
  LOAD       =   13.0000     LOAD
  ISTIF      =    1          STIFFNESS CALCULATION
  EXCITATION SPEED, RPM  =       0.0001
  NPAD       =    1          NUMBER OF PADS
  OUTER DIA  =    4.5050     OUTER DIAMETER
  INNER DIA  =    3.7930     INNER DIAMETER
  CLEARANCE  =  0.000200     BEARING CLEARANCE
  START      =     67.50     STARTING ANGLE OF PAD # 1
  PAD ANGLE  =     22.50          PAD ANGLE OF PAD # 1
  GRIDN      =   37          GRID POINTS IN CIRCUMFERENTIAL DIRECTION
  GRIDM      =   15          GRID POINTS IN RADIAL DIRECTION
  TAPERED LAND - CIRCUMFERENTIAL
  TAPER = 0.052          IL =     8     JL =    21     IR =    14     JR =   35
  VISCOSITY =  0.1750E-08    ABSOLUTE VISCOSITY
  ABS TEMP  =    576.00      ABSOLUTE TEMPERATURE
  GAS CONST =  423184.0      GAS CONSTANT
  JOINED BOUNDARY
  MXIT1      =  15.          (FOR COMPRESSIBILITY)
  MXIT2      =  15.          (FOR OPTION 2)
  TOL1       =    0.0200     TOLERANCE(COMPRESSIBILITY)
  TOL2       =    0.0200     ITERATION(OPTION 2)
  SPEED      =  50000.00     ROTATIONAL SPEED IN RPM
  PO         =     14.70     REFERENCE(AMBIENT)  PRESSURE
  PLEFT      =      0.00     GAGE PRESSURE AT LEFT BOUNDARY
  PRITE      =      0.00     GAGE PRESSURE AT RIGHT BOUNDARY
  PTOP       =     50.00     GAGE PRESSURE AT TOP BOUNDARY
  PBOT       =      0.00     GAGE PRESSURE AT BOTTOM BOUNDARY
  SPCIFIED PRESSURE
      8   17     50.00
      9   17     50.00
     10   17     50.00
     11   17     50.00
     12   17     50.00
     13   17     50.00
     14   17     50.00
      8   18     50.00
      9   18     50.00
     10   18     50.00
     11   18     50.00
     12   18     50.00
     13   18     50.00
     14   18     50.00
      8   19     50.00
      9   19     50.00
     10   19     50.00
     11   19     50.00
     12   19     50.00
     13   19     50.00
     14   19     50.00
      8   20     50.00
      9   20     50.00
     10   20     50.00
     11   20     50.00
     12   20     50.00
     13   20     50.00
     14   20     50.00
      8   21     50.00
      9   21     50.00
```

```
06/02/1993  10:14        Filename: XAMPLE2B.OUT                    Page   2

     10   21     50.00
     11   21     50.00
     12   21     50.00
     13   21     50.00
     14   21     50.00
      7    1     50.00
      7    2     50.00
      7    3     50.00
      7    4     50.00
      7    5     50.00
      7    6     50.00
      7    7     50.00
      7    8     50.00
      7    9     50.00
      7   10     50.00
      7   11     50.00
      7   12     50.00
      7   13     50.00
      7   14     50.00
      7   15     50.00
      7   16     50.00
      7   17     50.00
      7   18     50.00
      7   19     50.00
      7   20     50.00
      7   21     50.00
      7   22     50.00
      7   23     50.00
      7   24     50.00
      7   25     50.00
      7   26     50.00
      7   27     50.00
      7   28     50.00
      7   29     50.00
      7   30     50.00
      7   31     50.00
      7   32     50.00
      7   33     50.00
      7   34     50.00
      7   35     50.00
      7   36     50.00
      7   37     50.00
      6    1     50.00
      6    2     50.00
      6    3     50.00
      6    4     50.00
      6    5     50.00
      6    6     50.00
      6    7     50.00
      6    8     50.00
      6    9     50.00
      6   10     50.00
      6   11     50.00
      6   12     50.00
      6   13     50.00
      6   14     50.00
      6   15     50.00
      6   16     50.00
      6   17     50.00
      6   18     50.00
      6   19     50.00
      6   20     50.00
      6   21     50.00
      6   22     50.00
      6   23     50.00
      6   24     50.00
```

Figure 5-8 Sample Problem 2, Tapered Land Seal, Grid Point Constant Pressure, Output File

```
     6   25      50.00
     6   26      50.00
     6   27      50.00
     6   28      50.00
     6   29      50.00
     6   30      50.00
     6   31      50.00
     6   32      50.00
     6   33      50.00
     6   34      50.00
     6   35      50.00
     6   36      50.00
     6   37      50.00


SINGLE TAPERED LAND SEAL
  GFACE

  GAS THRUST BEARING/SEAL


  -BEARING GEOMETRY
   NUMBER OF PADS =     1
   OUTER DIAMETER =     4.505 IN
   INNER DIAMETER =     3.793 IN
        CLEARANCE =  0.000200 IN
   STARTING ANGLE =    67.50 DEG
        PAD ANGLE =    22.50 DEG

  -LUBRICANT PROPERTIES
                VISCOSITY =  0.1750000E-08 LB-S/IN**2
             GAS CONSTANT =   423184.0     IN**2/S**2-R
        ABS. TEMPERATURE =   576.0000     DEG R

  -BOUNDARY CONDITIONS
      REFERENCE P =   14.70000     PSI
            PLEFT =  0.0000000E+00 PSI
            PRITE =  0.0000000E+00 PSI
             PTOP =   50.00000     PSI
             PBOT =  0.0000000E+00 PSI
            SPEED =   50000.00     RPM

  -BEARING MODEL
                M =   15
                N =   37
           JOINED =    T

   DZ
   0.113E-01 0.113E-01 0.113E-01 0.113E-01 0.113E-01
   0.113E-01 0.113E-01 0.113E-01 0.113E-01 0.113E-01
   0.113E-01 0.113E-01 0.113E-01 0.113E-01 0.113E-01

   DTHETA
   0.109E-01 0.109E-01 0.109E-01 0.109E-01 0.109E-01
   0.109E-01 0.109E-01 0.109E-01 0.109E-01 0.109E-01
   0.109E-01 0.109E-01 0.109E-01 0.109E-01 0.109E-01
   0.109E-01 0.109E-01 0.109E-01 0.109E-01 0.109E-01
   0.109E-01 0.109E-01 0.109E-01 0.109E-01 0.109E-01
   0.109E-01 0.109E-01 0.109E-01 0.109E-01 0.109E-01
   0.109E-01 0.109E-01 0.109E-01 0.109E-01 0.109E-01
   0.109E-01 0.109E-01


SINGLE TAPERED LAND SEAL
  GFACE
```



```
  -MAXIMUM NUMBER OF ITERATIONS
     MXIT1 =    15        (FOR COMPRESSIBILITY)
     MXIT2 =    15        (FOR OPTION 2)

  -TOLERANCE
      TOL1 =   0.02000  (FOR COMPRESSIBILITY)
      TOL2 =   0.02000  (FOR OPTION 2)

  -OPTION  =    2        GIVEN LOAD  FIND CLEARANCE


  SPECIFIED PRESSURE
      1  F  F  F  F  F  T  T  F  F  F  F  F  F  F  F
      2  F  F  F  F  F  T  T  F  F  F  F  F  F  F  F
      3  F  F  F  F  F  T  T  F  F  F  F  F  F  F  F
      4  F  F  F  F  F  T  T  F  F  F  F  F  F  F  F
      5  F  F  F  F  F  T  T  F  F  F  F  F  F  F  F
      6  F  F  F  F  F  T  T  F  F  F  F  F  F  F  F
      7  F  F  F  F  F  T  T  F  F  F  F  F  F  F  F
      8  F  F  F  F  F  T  T  F  F  F  F  F  F  F  F
      9  F  F  F  F  F  T  T  F  F  F  F  F  F  F  F
     10  F  F  F  F  F  T  T  F  F  F  F  F  F  F  F
     11  F  F  F  F  F  T  T  F  F  F  F  F  F  F  F
     12  F  F  F  F  F  T  T  F  F  F  F  F  F  F  F
     13  F  F  F  F  F  T  T  F  F  F  F  F  F  F  F
     14  F  F  F  F  F  T  T  F  F  F  F  F  F  F  F
     15  F  F  F  F  F  T  T  F  F  F  F  F  F  F  F
     16  F  F  F  F  F  T  T  F  F  F  F  F  F  F  F
     17  F  F  F  F  F  T  T  T  T  T  T  T  T  T  F
     18  F  F  F  F  F  T  T  T  T  T  T  T  T  T  F
     19  F  F  F  F  F  T  T  T  T  T  T  T  T  T  F
     20  F  F  F  F  F  T  T  T  T  T  T  T  T  T  F
     21  F  F  F  F  F  T  T  T  T  T  T  T  T  T  F
     22  F  F  F  F  F  T  T  F  F  F  F  F  F  F  F
     23  F  F  F  F  F  T  T  F  F  F  F  F  F  F  F
     24  F  F  F  F  F  T  T  F  F  F  F  F  F  F  F
     25  F  F  F  F  F  T  T  F  F  F  F  F  F  F  F
     26  F  F  F  F  F  T  T  F  F  F  F  F  F  F  F
     27  F  F  F  F  F  T  T  F  F  F  F  F  F  F  F
     28  F  F  F  F  F  T  T  F  F  F  F  F  F  F  F
     29  F  F  F  F  F  T  T  F  F  F  F  F  F  F  F
     30  F  F  F  F  F  T  T  F  F  F  F  F  F  F  F
     31  F  F  F  F  F  T  T  F  F  F  F  F  F  F  F
     32  F  F  F  F  F  T  T  F  F  F  F  F  F  F  F
     33  F  F  F  F  F  T  T  F  F  F  F  F  F  F  F
     34  F  F  F  F  F  T  T  F  F  F  F  F  F  F  F
     35  F  F  F  F  F  T  T  F  F  F  F  F  F  F  F
     36  F  F  F  F  F  T  T  F  F  F  F  F  F  F  F
     37  F  F  F  F  F  T  T  F  F  F  F  F  F  F  F
```

Figure 5-8 (Cont.)

06/02/1993 10:14 Filename: XAMPLE2B.OUT Page 5

NON-DIM CLEARANCE DISTRIBUTION(H/C) FOR PAD NUMBER 1

	I =	1	2	3	4	5	6
AXIAL LENGTH IN.		1.897	1.922	1.947	1.973	1.998	2.024
J	DEG.						
1	67.5	1.48	1.48	1.48	1.48	1.48	1.48
2	68.1	1.48	1.48	1.48	1.48	1.48	1.48
3	68.8	1.48	1.48	1.48	1.48	1.48	1.48
4	69.4	1.48	1.48	1.48	1.48	1.48	1.48
5	70.0	1.48	1.48	1.48	1.48	1.48	1.48
6	70.6	1.48	1.48	1.48	1.48	1.48	1.48
7	71.3	1.48	1.48	1.48	1.48	1.48	1.48
8	71.9	1.48	1.48	1.48	1.48	1.48	1.48
9	72.5	1.48	1.48	1.48	1.48	1.48	1.48
10	73.1	1.48	1.48	1.48	1.48	1.48	1.48
11	73.8	1.48	1.48	1.48	1.48	1.48	1.48
12	74.4	1.48	1.48	1.48	1.48	1.48	1.48
13	75.0	1.48	1.48	1.48	1.48	1.48	1.48
14	75.6	1.48	1.48	1.48	1.48	1.48	1.48
15	76.3	1.48	1.48	1.48	1.48	1.48	1.48
16	76.9	1.48	1.48	1.48	1.48	1.48	1.48
17	77.5	1.48	1.48	1.48	1.48	1.48	1.48
18	78.1	1.48	1.48	1.48	1.48	1.48	1.48
19	78.8	1.48	1.48	1.48	1.48	1.48	1.48
20	79.4	1.48	1.48	1.48	1.48	1.48	1.48
21	80.0	1.48	1.48	1.48	1.48	1.48	1.48
22	80.6	1.48	1.48	1.48	1.48	1.48	1.48
23	81.3	1.48	1.48	1.48	1.48	1.48	1.48
24	81.9	1.48	1.48	1.48	1.48	1.48	1.48
25	82.5	1.48	1.48	1.48	1.48	1.48	1.48
26	83.1	1.48	1.48	1.48	1.48	1.48	1.48
27	83.8	1.48	1.48	1.48	1.48	1.48	1.48
28	84.4	1.48	1.48	1.48	1.48	1.48	1.48
29	85.0	1.48	1.48	1.48	1.48	1.48	1.48
30	85.6	1.48	1.48	1.48	1.48	1.48	1.48
31	86.3	1.48	1.48	1.48	1.48	1.48	1.48
32	86.9	1.48	1.48	1.48	1.48	1.48	1.48
33	87.5	1.48	1.48	1.48	1.48	1.48	1.48
34	88.1	1.48	1.48	1.48	1.48	1.48	1.48
35	88.8	1.48	1.48	1.48	1.48	1.48	1.48
36	89.4	1.48	1.48	1.48	1.48	1.48	1.48
37	90.0	1.48	1.48	1.48	1.48	1.48	1.48

06/02/1993 10:14 Filename: XAMPLE2B.OUT Page 6

NON-DIM CLEARANCE DISTRIBUTION(H/C) FOR PAD NUMBER 1

	I =	7	8	9	10	11	12
AXIAL LENGTH IN.		2.049	2.074	2.100	2.125	2.151	2.176
J	DEG.						
1	67.5	1.48	1.48	1.48	1.48	1.48	1.48
2	68.1	1.48	1.48	1.48	1.48	1.48	1.48
3	68.8	1.48	1.48	1.48	1.48	1.48	1.48
4	69.4	1.48	1.48	1.48	1.48	1.48	1.48
5	70.0	1.48	1.48	1.48	1.48	1.48	1.48
6	70.6	1.48	1.48	1.48	1.48	1.48	1.48
7	71.3	1.48	1.48	1.48	1.48	1.48	1.48
8	71.9	1.48	1.48	1.48	1.48	1.48	1.48
9	72.5	1.48	1.48	1.48	1.48	1.48	1.48
10	73.1	1.48	1.48	1.48	1.48	1.48	1.48
11	73.8	1.48	1.48	1.48	1.48	1.48	1.48
12	74.4	1.48	1.48	1.48	1.48	1.48	1.48
13	75.0	1.48	1.48	1.48	1.48	1.48	1.48
14	75.6	1.48	1.48	1.48	1.48	1.48	1.48
15	76.3	1.48	1.48	1.48	1.48	1.48	1.48
16	76.9	1.48	1.48	1.48	1.48	1.48	1.48
17	77.5	1.48	1.48	1.48	1.48	1.48	1.48
18	78.1	1.48	1.48	1.48	1.48	1.48	1.48
19	78.8	1.48	1.48	1.48	1.48	1.48	1.48
20	79.4	1.48	1.48	1.48	1.48	1.48	1.48
21	80.0	1.48	3.05	3.05	3.05	3.05	3.05
22	80.6	1.48	2.93	2.93	2.93	2.93	2.93
23	81.3	1.48	2.82	2.82	2.82	2.82	2.82
24	81.9	1.48	2.71	2.71	2.71	2.71	2.71
25	82.5	1.48	2.60	2.60	2.60	2.60	2.60
26	83.1	1.48	2.49	2.49	2.49	2.49	2.49
27	83.8	1.48	2.38	2.38	2.38	2.38	2.38
28	84.4	1.48	2.26	2.26	2.26	2.26	2.26
29	85.0	1.48	2.15	2.15	2.15	2.15	2.15
30	85.6	1.48	2.04	2.04	2.04	2.04	2.04
31	86.3	1.48	1.93	1.93	1.93	1.93	1.93
32	86.9	1.48	1.82	1.82	1.82	1.82	1.82
33	87.5	1.48	1.71	1.71	1.71	1.71	1.71
34	88.1	1.48	1.59	1.59	1.59	1.59	1.59
35	88.8	1.48	1.48	1.48	1.48	1.48	1.48
36	89.4	1.48	1.48	1.48	1.48	1.48	1.48
37	90.0	1.48	1.48	1.48	1.48	1.48	1.48

Figure 5-8 (Cont.)

06/02/1993 10:14 Filename: XAMPLE2B.OUT Page 7

NON-DIM CLEARANCE DISTRIBUTION(H/C) FOR PAD NUMBER 1

I =		13	14	15
AXIAL LENGTH IN.		2.202	2.227	2.252
J	DEG.			
1	67.5	1.48	1.48	1.48
2	68.1	1.48	1.48	1.48
3	68.8	1.48	1.48	1.48
4	69.4	1.48	1.48	1.48
5	70.0	1.48	1.48	1.48
6	70.6	1.48	1.48	1.48
7	71.3	1.48	1.48	1.48
8	71.9	1.48	1.48	1.48
9	72.5	1.48	1.48	1.48
10	73.1	1.48	1.48	1.48
11	73.8	1.48	1.48	1.48
12	74.4	1.48	1.48	1.48
13	75.0	1.48	1.48	1.48
14	75.6	1.48	1.48	1.48
15	76.3	1.48	1.48	1.48
16	76.9	1.48	1.48	1.48
17	77.5	1.48	1.48	1.48
18	78.1	1.48	1.48	1.48
19	78.8	1.48	1.48	1.48
20	79.4	1.48	1.48	1.48
21	80.0	3.05	3.05	1.48
22	80.6	2.93	2.93	1.48
23	81.3	2.82	2.82	1.48
24	81.9	2.71	2.71	1.48
25	82.5	2.60	2.60	1.48
26	83.1	2.49	2.49	1.48
27	83.8	2.38	2.38	1.48
28	84.4	2.26	2.26	1.48
29	85.0	2.15	2.15	1.48
30	85.6	2.04	2.04	1.48
31	86.3	1.93	1.93	1.48
32	86.9	1.82	1.82	1.48
33	87.5	1.71	1.71	1.48
34	88.1	1.59	1.59	1.48
35	88.8	1.48	1.48	1.48
36	89.4	1.48	1.48	1.48
37	90.0	1.48	1.48	1.48

MIN. CLEAR.= 1.4821 AT 90.000 DEGREES

MAX. CLEAR.= 3.0458 AT 80.000 DEGREES

06/02/1993 10:14 Filename: XAMPLE2B.OUT Page 8

PRESSURE DISTRIBUTION (PSI) FOR PAD NUMBER 1

I =		1	2	3	4	5	6
AXIAL LENGTH IN.		1.897	1.922	1.947	1.973	1.998	2.024
J	DEG.						
1	67.5	0.000E+00	17.4	28.1	36.6	43.7	50.0
2	68.1	0.000E+00	17.4	28.1	36.6	43.7	50.0
3	68.8	0.000E+00	17.4	28.1	36.6	43.7	50.0
4	69.4	0.000E+00	17.4	28.1	36.6	43.7	50.0
5	70.0	0.000E+00	17.4	28.1	36.6	43.7	50.0
6	70.6	0.000E+00	17.4	28.1	36.6	43.7	50.0
7	71.3	0.000E+00	17.4	28.1	36.6	43.7	50.0
8	71.9	0.000E+00	17.4	28.1	36.6	43.7	50.0
9	72.5	0.000E+00	17.4	28.1	36.6	43.7	50.0
10	73.1	0.000E+00	17.4	28.1	36.6	43.7	50.0
11	73.8	0.000E+00	17.4	28.1	36.6	43.7	50.0
12	74.4	0.000E+00	17.4	28.1	36.6	43.7	50.0
13	75.0	0.000E+00	17.4	28.1	36.6	43.7	50.0
14	75.6	0.000E+00	17.4	28.1	36.6	43.7	50.0
15	76.3	0.000E+00	17.4	28.1	36.6	43.7	50.0
16	76.9	0.000E+00	17.4	28.1	36.6	43.7	50.0
17	77.5	0.000E+00	17.4	28.1	36.6	43.7	50.0
18	78.1	0.000E+00	17.4	28.1	36.6	43.7	50.0
19	78.8	0.000E+00	17.4	28.1	36.6	43.7	50.0
20	79.4	0.000E+00	17.4	28.1	36.6	43.7	50.0
21	80.0	0.000E+00	17.4	28.1	36.6	43.7	50.0
22	80.6	0.000E+00	17.4	28.1	36.6	43.7	50.0
23	81.3	0.000E+00	17.4	28.1	36.6	43.7	50.0
24	81.9	0.000E+00	17.4	28.1	36.6	43.7	50.0
25	82.5	0.000E+00	17.4	28.1	36.6	43.7	50.0
26	83.1	0.000E+00	17.4	28.1	36.6	43.7	50.0
27	83.8	0.000E+00	17.4	28.1	36.6	43.7	50.0
28	84.4	0.000E+00	17.4	28.1	36.6	43.7	50.0
29	85.0	0.000E+00	17.4	28.1	36.6	43.7	50.0
30	85.6	0.000E+00	17.4	28.1	36.6	43.7	50.0
31	86.3	0.000E+00	17.4	28.1	36.6	43.7	50.0
32	86.9	0.000E+00	17.4	28.1	36.6	43.7	50.0
33	87.5	0.000E+00	17.4	28.1	36.6	43.7	50.0
34	88.1	0.000E+00	17.4	28.1	36.6	43.7	50.0
35	88.8	0.000E+00	17.4	28.1	36.6	43.7	50.0
36	89.4	0.000E+00	17.4	28.1	36.6	43.7	50.0
37	90.0	0.000E+00	17.4	28.1	36.6	43.7	50.0

Figure 5-8 (Cont.)

PRESSURE DISTRIBUTION (PSI) FOR PAD NUMBER 1

	I =	7	8	9	10	11	12
AXIAL LENGTH IN.		2.049	2.074	2.100	2.125	2.151	2.176
J	DEG.						
1	67.5	50.0	53.1	55.5	57.0	57.4	56.9
2	68.1	50.0	52.5	54.5	55.8	56.2	55.7
3	68.8	50.0	52.1	53.7	54.8	55.1	54.7
4	69.4	50.0	51.7	53.1	54.0	54.3	53.9
5	70.0	50.0	51.4	52.6	53.3	53.5	53.2
6	70.6	50.0	51.2	52.1	52.7	52.9	52.7
7	71.3	50.0	51.0	51.7	52.3	52.4	52.2
8	71.9	50.0	50.8	51.4	51.9	52.0	51.8
9	72.5	50.0	50.7	51.2	51.5	51.7	51.5
10	73.1	50.0	50.5	51.0	51.3	51.4	51.3
11	73.8	50.0	50.4	50.8	51.1	51.1	51.0
12	74.4	50.0	50.4	50.7	50.9	50.9	50.8
13	75.0	50.0	50.3	50.5	50.7	50.8	50.7
14	75.6	50.0	50.2	50.4	50.6	50.6	50.5
15	76.3	50.0	50.2	50.3	50.4	50.4	50.4
16	76.9	50.0	50.1	50.2	50.2	50.3	50.2
17	77.5	50.0	50.0	50.0	50.0	50.0	50.0
18	78.1	50.0	50.0	50.0	50.0	50.0	50.0
19	78.8	50.0	50.0	50.0	50.0	50.0	50.0
20	79.4	50.0	50.0	50.0	50.0	50.0	50.0
21	80.0	50.0	50.0	50.0	50.0	50.0	50.0
22	80.6	50.0	50.9	51.0	51.1	51.1	51.1
23	81.3	50.0	51.7	51.9	52.1	52.1	52.1
24	81.9	50.0	52.5	52.8	53.0	53.1	53.1
25	82.5	50.0	53.2	53.7	54.0	54.1	54.0
26	83.1	50.0	53.9	54.5	54.9	55.1	54.9
27	83.8	50.0	54.4	55.3	55.8	56.0	55.8
28	84.4	50.0	55.0	56.1	56.7	56.9	56.7
29	85.0	50.0	55.4	56.8	57.6	57.9	57.6
30	85.6	50.0	55.8	57.5	58.5	58.8	58.4
31	86.3	50.0	56.0	58.1	59.3	59.7	59.3
32	86.9	50.0	56.1	58.7	60.1	60.5	60.1
33	87.5	50.0	56.1	59.1	60.7	61.2	60.7
34	88.1	50.0	55.7	59.1	60.9	61.4	60.9
35	88.8	50.0	54.9	58.2	60.0	60.6	60.0
36	89.4	50.0	53.9	56.7	58.4	58.9	58.3
37	90.0	50.0	53.1	55.5	57.0	57.4	56.9

PRESSURE DISTRIBUTION (PSI) FOR PAD NUMBER 1

	I =	13	14	15
AXIAL LENGTH IN.		2.202	2.227	2.252
J	DEG.			
1	67.5	55.4	53.0	50.0
2	68.1	54.4	52.5	50.0
3	68.8	53.7	52.0	50.0
4	69.4	53.0	51.6	50.0
5	70.0	52.5	51.4	50.0
6	70.6	52.1	51.1	50.0
7	71.3	51.7	50.9	50.0
8	71.9	51.4	50.8	50.0
9	72.5	51.2	50.6	50.0
10	73.1	51.0	50.5	50.0
11	73.8	50.8	50.4	50.0
12	74.4	50.6	50.3	50.0
13	75.0	50.5	50.3	50.0
14	75.6	50.4	50.2	50.0
15	76.3	50.3	50.2	50.0
16	76.9	50.2	50.1	50.0
17	77.5	50.0	50.0	50.0
18	78.1	50.0	50.0	50.0
19	78.8	50.0	50.0	50.0
20	79.4	50.0	50.0	50.0
21	80.0	50.0	50.0	50.0
22	80.6	51.0	50.9	50.0
23	81.3	52.0	51.7	50.0
24	81.9	52.9	52.5	50.0
25	82.5	53.7	53.2	50.0
26	83.1	54.5	53.9	50.0
27	83.8	55.3	54.4	50.0
28	84.4	56.1	54.9	50.0
29	85.0	56.8	55.4	50.0
30	85.6	57.4	55.7	50.0
31	86.3	58.1	56.0	50.0
32	86.9	58.6	56.1	50.0
33	87.5	59.0	56.0	50.0
34	88.1	59.0	55.7	50.0
35	88.8	58.1	54.8	50.0
36	89.4	56.6	53.8	50.0
37	90.0	55.4	53.0	50.0

MIN. PRESS= 0.00000E+00 AT 90.000 DEGREES

MAX. PRESS= 61.436 AT 88.125 DEGREES

SINGLE TAPERED LAND SEAL
GFACE

-JOURNAL POSITION & FORCES

MINIMUM CLEARANCE	=	0.000296	IN
LOAD CAPACITY	=	13.08	LB
MOMENT ABOUT X-X	=	26.82	IN-LB
MOMENT ABOUT Y-Y	=	-5.263	IN-LB
POWER LOSS	=	0.2926E-01	HP
LEAKAGE AT INNER	=	-0.2327E-04	LB/S
LEAKAGE AT OUTER	=	0.9632E-05	LB/S

-STIFFNESS COEFFICIENTS

Figure 5-8 (Cont.)

```
06/02/1993  10:14        Filename: XAMPLE2B.OUT                    Page  11

    PRINCIPAL  Z      KZZ =   4719.      LB/IN
    CROSS-COUPLED     KZA =   9396.      LB/RAD
    CROSS-COUPLED     KZB =  -2108.      LB/RAD
    CROSS-COUPLED     KAZ =   9939.      IN-LB/IN
    PRINCIPAL  A      KAA =  0.1990E+05  IN-LB/RAD
    CROSS-COUPLED     KAB =  -4320.      IN-LB/RAD
    CROSS-COUPLED     KBZ =  -1544.      IN-LB/IN
    CROSS-COUPLED     KBA =  -2980.      IN-LB/RAD
    PRINCIPAL  B      KBB =   1237.      IN-LB/RAD

  -DAMPING COEFFICIENTS
    PRINCIPAL  Z      DZZ =   1.608      LB-S/IN
    CROSS-COUPLED     DZA =   3.256      LB-S/RAD
    CROSS-COUPLED     DZB = -0.6525      LB-S/RAD
    CROSS-COUPLED     DAZ =   3.255      IN-LB-S/IN
    PRINCIPAL  A      DAA =   6.599      IN-LB-S/RAD
    CROSS-COUPLED     DAB =  -1.312      IN-LB-S/RAD
    CROSS-COUPLED     DBZ = -0.1294E-03  IN-LB-S/IN
    CROSS-COUPLED     DBA =  -1.299      IN-LB-S/RAD
    PRINCIPAL  B      DBB =  0.3091      IN-LB-S/RAD

SINGLE TAPERED LAND SEAL
  GFACE

  ECHO OF INPUT


 NO MORE INPUT, PROGRAM TERMINATED
```

Figure 5-8 (Cont.)

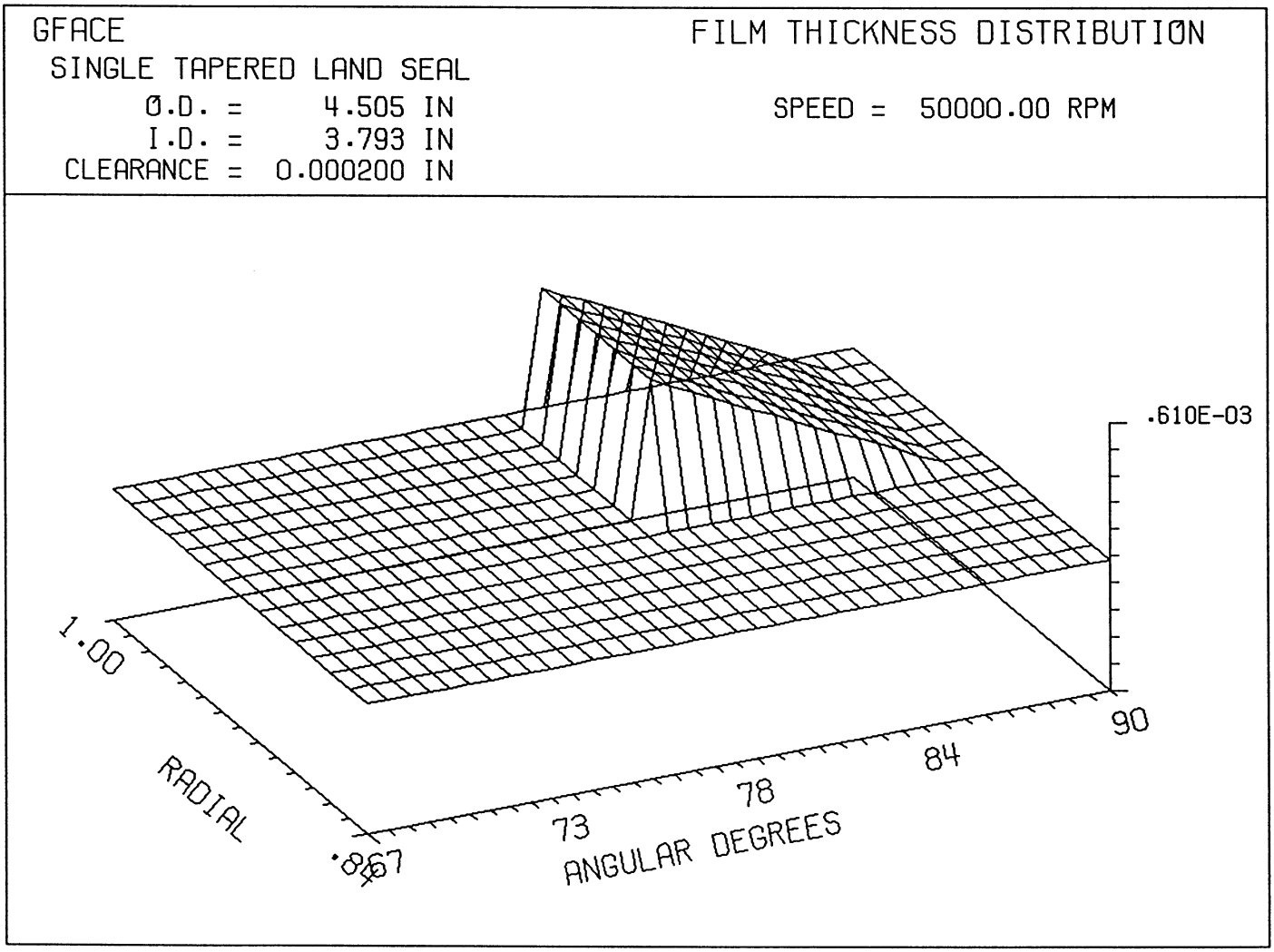

Figure 5-9 Sample Problem 2, Tapered Land Seal, Clearance Distribution

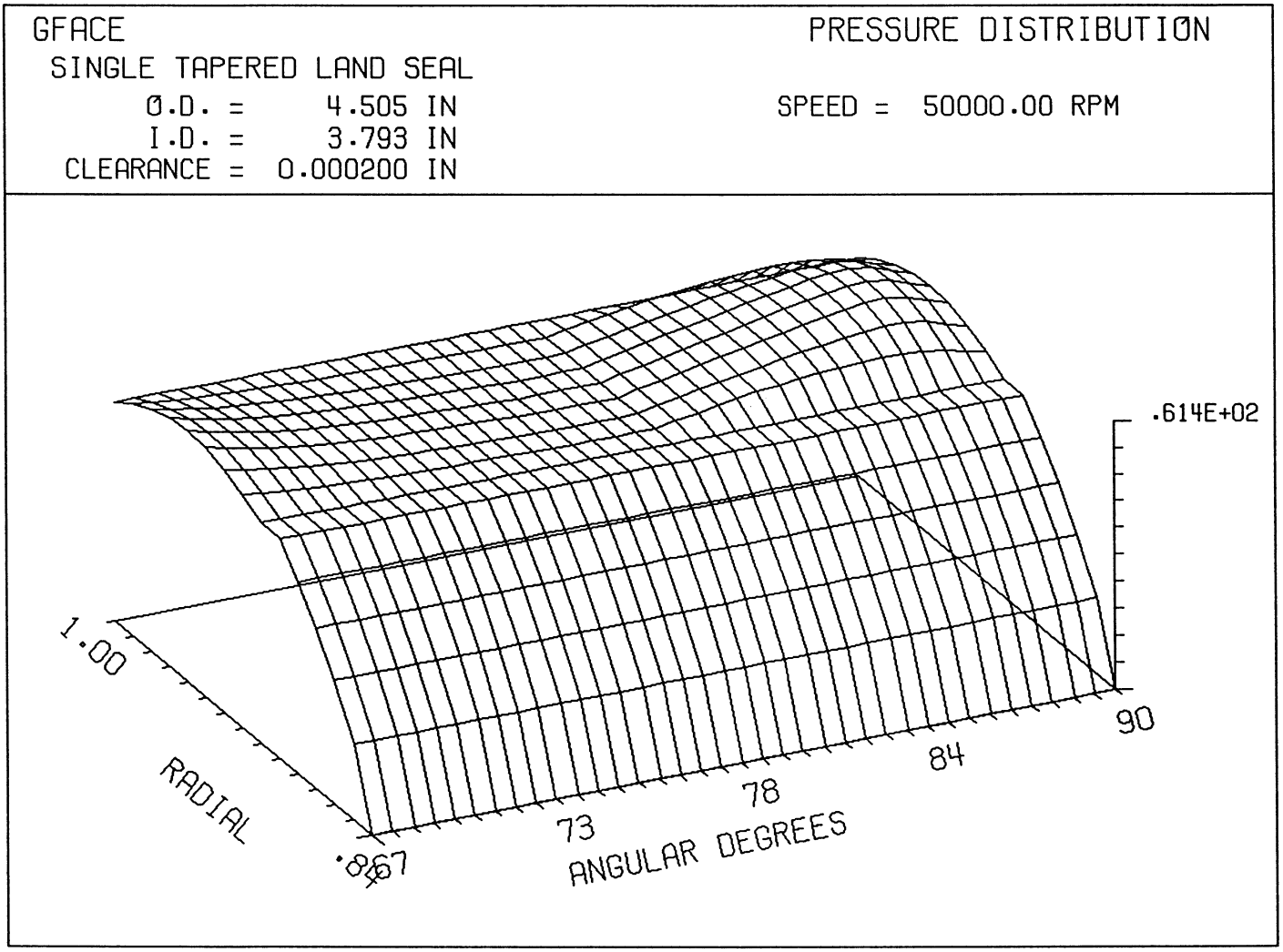

Figure 5-10 Sample Problem 2, Tapered-Land Seal, Pressure Distribution

5.3 Tapered Land Seal Using Constant Pressure Regions

The tapered land input described in Section 4.2 is cumbersome because of the many individual pressure points that had to be inputted. If the pressures are all the same, then a much simpler input scheme can be applied; that is using the constant pressure region option. The following methodology is employed:

Parameter in columns 1-10	Values in column 11-80
PCON	2 - Implies that two constant pressure regions will be specified.

The lines that follow identify the pressure in the region and the I,J extremities of the region (lower left corner and upper right corner). Thus there are four inputs for each region and there are as many input lines as there are regions.

The input is indicated on Fig. 5-11. Comparing this input to Fig, 5-7 shows a significant condensation and reduction in input entrys. The output shown on Fig. 5-12 indicates that the results are identical to Sample Problem 5.2.

07/06/1993 21:17 Filename: XAMPLE2C.INP Page 1

```
XAMPLE2C
SINGLE TAPERED LAND SEAL
OPTION    2
LOAD      13.0
STIFFNESS 0.0001
NPAD      1
OUTER     4.505
INNER     3.793
CLEARANCE 0.0002
START     67.5
PADANGLE  22.5
GRIDN     37.
GRIDM     15.
CTAPER    1.
.05209   8 21 14 35
VISCOSITY 1.75E-09
ABSTEMP   576.
GASCONST  423184.
JOINED
ITERATION 15  15
TOLERANCE .020  .02
SPEED     50000.
PO        14.7
PLEFT     0.0
PRITE     0.0
PTOP      50.
PBOT      0.0
PCON      2
 50. 8 17 14 21
 50. 6 1 7 37
END
```

Figure 5-11 Sample Problem 3, Tapered Land Seal With Constant Pressure Regions, Input File

```
07/07/1993  11:25        Filename: XAMPLE2C.OUT                    Page   1


SINGLE TAPERED LAND SEAL
  GFACE

  ECHO OF INPUT

  OPTION     =    2          GIVEN LOAD FIND CLEARANCE
  LOAD       =   13.0000     LOAD
  ISTIF      =    1          STIFFNESS CALCULATION
  EXCITATION SPEED, RPM  =       0.0001
  NPAD       =    1          NUMBER OF PADS
  OUTER DIA  =    4.5050     OUTER DIAMETER
  INNER DIA  =    3.7930     INNER DIAMETER
  CLEARANCE  =  0.000200     BEARING CLEARANCE
  START      =     67.50     STARTING ANGLE OF PAD # 1
  PAD ANGLE  =     22.50          PAD ANGLE OF PAD # 1
  GRIDN      =   37          GRID POINTS IN CIRCUMFERENTIAL DIRECTION
  GRIDM      =   15          GRID POINTS IN RADIAL DIRECTION
  TAPERED LAND - CIRCUMFERENTIAL
  TAPER = 0.052          IL =     8     JL =    21     IR =    14     JR =   35
  VISCOSITY =  0.1750E-08    ABSOLUTE VISCOSITY
  ABS TEMP  =    576.00      ABSOLUTE TEMPERATURE
  GAS CONST =  423184.0      GAS CONSTANT
  JOINED BOUNDARY
  MXIT1      =  15.          (FOR COMPRESSIBILITY)
  MXIT2      =  15.          (FOR OPTION 2)
  TOL1       =    0.0200     TOLERANCE(COMPRESSIBILITY)
  TOL2       =    0.0200     ITERATION(OPTION 2)
  SPEED      =  50000.00     ROTATIONAL SPEED IN RPM
  PO         =     14.70     REFERENCE(AMBIENT)  PRESSURE
  PLEFT      =      0.00     GAGE PRESSURE AT LEFT BOUNDARY
  PRITE      =      0.00     GAGE PRESSURE AT RIGHT BOUNDARY
  PTOP       =     50.00     GAGE PRESSURE AT TOP BOUNDARY
  PBOT       =      0.00     GAGE PRESSURE AT BOTTOM BOUNDARY
  CONSTANT PRESSURE REGION
  PRESSURE =     50.00000          ILP =     8     JLP =    17     IRP =    14
  JRP =   21
  CONSTANT PRESSURE REGION
  PRESSURE =     50.00000          ILP =     6     JLP =     1     IRP =     7
  JRP =   37


SINGLE TAPERED LAND SEAL
  GFACE

  GAS THRUST BEARING/SEAL


  -BEARING GEOMETRY
   NUMBER OF PADS =    1
   OUTER DIAMETER =     4.505 IN
   INNER DIAMETER =     3.793 IN
        CLEARANCE =  0.000200 IN
   STARTING ANGLE =     67.50 DEG
        PAD ANGLE =     22.50 DEG

  -LUBRICANT PROPERTIES
              VISCOSITY =  0.1750000E-08 LB-S/IN**2
           GAS CONSTANT =   423184.0     IN**2/S**2-R
      ABS. TEMPERATURE =   576.0000      DEG R

  -BOUNDARY CONDITIONS
     REFERENCE P =   14.70000     PSI
           PLEFT =  0.0000000E+00 PSI
           PRITE =  0.0000000E+00 PSI
```

```
07/07/1993  11:25        Filename: XAMPLE2C.OUT                    Page   2

           PTOP =   50.00000     PSI
           PBOT =  0.0000000E+00 PSI
          SPEED =   50000.00     RPM

  -BEARING MODEL
              M =   15
              N =   37
         JOINED =    T

   DZ
   0.113E-01 0.113E-01 0.113E-01 0.113E-01 0.113E-01
   0.113E-01 0.113E-01 0.113E-01 0.113E-01 0.113E-01
   0.113E-01 0.113E-01 0.113E-01 0.113E-01 0.113E-01

   DTHETA
   0.109E-01 0.109E-01 0.109E-01 0.109E-01 0.109E-01
   0.109E-01 0.109E-01 0.109E-01 0.109E-01 0.109E-01
   0.109E-01 0.109E-01 0.109E-01 0.109E-01 0.109E-01
   0.109E-01 0.109E-01 0.109E-01 0.109E-01 0.109E-01
   0.109E-01 0.109E-01 0.109E-01 0.109E-01 0.109E-01
   0.109E-01 0.109E-01 0.109E-01 0.109E-01 0.109E-01
   0.109E-01 0.109E-01 0.109E-01 0.109E-01 0.109E-01
   0.109E-01 0.109E-01

SINGLE TAPERED LAND SEAL
  GFACE

  -MAXIMUM NUMBER OF ITERATIONS
     MXIT1 =   15       (FOR COMPRESSIBILITY)
     MXIT2 =   15       (FOR OPTION 2)

  -TOLERANCE
     TOL1 =   0.02000  (FOR COMPRESSIBILITY)
     TOL2 =   0.02000  (FOR OPTION 2)

  -OPTION  =    2       GIVEN LOAD  FIND CLEARANCE


  SPECIFIED PRESSURE
      1  F  F  F  F  F  T  T  F  F  F  F  F  F  F  F
      2  F  F  F  F  F  T  T  F  F  F  F  F  F  F  F
      3  F  F  F  F  F  T  T  F  F  F  F  F  F  F  F
      4  F  F  F  F  F  T  T  F  F  F  F  F  F  F  F
      5  F  F  F  F  F  T  T  F  F  F  F  F  F  F  F
      6  F  F  F  F  F  T  T  F  F  F  F  F  F  F  F
      7  F  F  F  F  F  T  T  F  F  F  F  F  F  F  F
      8  F  F  F  F  F  T  T  F  F  F  F  F  F  F  F
      9  F  F  F  F  F  T  T  F  F  F  F  F  F  F  F
     10  F  F  F  F  F  T  T  F  F  F  F  F  F  F  F
     11  F  F  F  F  F  T  T  F  F  F  F  F  F  F  F
     12  F  F  F  F  F  T  T  F  F  F  F  F  F  F  F
     13  F  F  F  F  F  T  T  F  F  F  F  F  F  F  F
     14  F  F  F  F  F  T  T  F  F  F  F  F  F  F  F
     15  F  F  F  F  F  T  T  F  F  F  F  F  F  F  F
     16  F  F  F  F  F  T  T  F  F  F  F  F  F  F  F
     17  F  F  F  F  F  T  T  T  T  T  T  T  T  T  F
     18  F  F  F  F  F  T  T  T  T  T  T  T  T  T  F
     19  F  F  F  F  F  T  T  T  T  T  T  T  T  T  F
     20  F  F  F  F  F  T  T  T  T  T  T  T  T  T  F
     21  F  F  F  F  F  T  T  T  T  T  T  T  T  T  F
     22  F  F  F  F  F  T  T  F  F  F  F  F  F  F  F
     23  F  F  F  F  F  T  T  F  F  F  F  F  F  F  F
     24  F  F  F  F  F  T  T  F  F  F  F  F  F  F  F
     25  F  F  F  F  F  T  T  F  F  F  F  F  F  F  F
     26  F  F  F  F  F  T  T  F  F  F  F  F  F  F  F
```

Figure 5-12 Sample Problem 3, Tapered Land Seal With Constant Pressure Regions, Output File

27	F	F	F	F	F	T	T	F	F	F	F	F	F	F	F
28	F	F	F	F	F	T	T	F	F	F	F	F	F	F	F
29	F	F	F	F	F	T	T	F	F	F	F	F	F	F	F
30	F	F	F	F	F	T	T	F	F	F	F	F	F	F	F
31	F	F	F	F	F	T	T	F	F	F	F	F	F	F	F
32	F	F	F	F	F	T	T	F	F	F	F	F	F	F	F
33	F	F	F	F	F	T	T	F	F	F	F	F	F	F	F
34	F	F	F	F	F	T	T	F	F	F	F	F	F	F	F
35	F	F	F	F	F	T	T	F	F	F	F	F	F	F	F
36	F	F	F	F	F	T	T	F	F	F	F	F	F	F	F
37	F	F	F	F	F	T	T	F	F	F	F	F	F	F	F

NON-DIM CLEARANCE DISTRIBUTION(H/C) FOR PAD NUMBER 1

I =		1	2	3	4	5	6
AXIAL LENGTH IN.		1.897	1.922	1.947	1.973	1.998	2.024
J	DEG.						
1	67.5	1.48	1.48	1.48	1.48	1.48	1.48
2	68.1	1.48	1.48	1.48	1.48	1.48	1.48
3	68.8	1.48	1.48	1.48	1.48	1.48	1.48
4	69.4	1.48	1.48	1.48	1.48	1.48	1.48
5	70.0	1.48	1.48	1.48	1.48	1.48	1.48
6	70.6	1.48	1.48	1.48	1.48	1.48	1.48
7	71.3	1.48	1.48	1.48	1.48	1.48	1.48
8	71.9	1.48	1.48	1.48	1.48	1.48	1.48
9	72.5	1.48	1.48	1.48	1.48	1.48	1.48
10	73.1	1.48	1.48	1.48	1.48	1.48	1.48
11	73.8	1.48	1.48	1.48	1.48	1.48	1.48
12	74.4	1.48	1.48	1.48	1.48	1.48	1.48
13	75.0	1.48	1.48	1.48	1.48	1.48	1.48
14	75.6	1.48	1.48	1.48	1.48	1.48	1.48
15	76.3	1.48	1.48	1.48	1.48	1.48	1.48
16	76.9	1.48	1.48	1.48	1.48	1.48	1.48
17	77.5	1.48	1.48	1.48	1.48	1.48	1.48
18	78.1	1.48	1.48	1.48	1.48	1.48	1.48
19	78.8	1.48	1.48	1.48	1.48	1.48	1.48
20	79.4	1.48	1.48	1.48	1.48	1.48	1.48
21	80.0	1.48	1.48	1.48	1.48	1.48	1.48
22	80.6	1.48	1.48	1.48	1.48	1.48	1.48
23	81.3	1.48	1.48	1.48	1.48	1.48	1.48
24	81.9	1.48	1.48	1.48	1.48	1.48	1.48
25	82.5	1.48	1.48	1.48	1.48	1.48	1.48
26	83.1	1.48	1.48	1.48	1.48	1.48	1.48
27	83.8	1.48	1.48	1.48	1.48	1.48	1.48
28	84.4	1.48	1.48	1.48	1.48	1.48	1.48
29	85.0	1.48	1.48	1.48	1.48	1.48	1.48
30	85.6	1.48	1.48	1.48	1.48	1.48	1.48
31	86.3	1.48	1.48	1.48	1.48	1.48	1.48
32	86.9	1.48	1.48	1.48	1.48	1.48	1.48
33	87.5	1.48	1.48	1.48	1.48	1.48	1.48
34	88.1	1.48	1.48	1.48	1.48	1.48	1.48
35	88.8	1.48	1.48	1.48	1.48	1.48	1.48
36	89.4	1.48	1.48	1.48	1.48	1.48	1.48
37	90.0	1.48	1.48	1.48	1.48	1.48	1.48

Figure 5-12 (Cont.)

07/07/1993 11:25 Filename: XAMPLE2C.OUT Page 5

NON-DIM CLEARANCE DISTRIBUTION(H/C) FOR PAD NUMBER 1

	I =	7	8	9	10	11	12
	AXIAL LENGTH IN.	2.049	2.074	2.100	2.125	2.151	2.176
J	DEG.						
1	67.5	1.48	1.48	1.48	1.48	1.48	1.48
2	68.1	1.48	1.48	1.48	1.48	1.48	1.48
3	68.8	1.48	1.48	1.48	1.48	1.48	1.48
4	69.4	1.48	1.48	1.48	1.48	1.48	1.48
5	70.0	1.48	1.48	1.48	1.48	1.48	1.48
6	70.6	1.48	1.48	1.48	1.48	1.48	1.48
7	71.3	1.48	1.48	1.48	1.48	1.48	1.48
8	71.9	1.48	1.48	1.48	1.48	1.48	1.48
9	72.5	1.48	1.48	1.48	1.48	1.48	1.48
10	73.1	1.48	1.48	1.48	1.48	1.48	1.48
11	73.8	1.48	1.48	1.48	1.48	1.48	1.48
12	74.4	1.48	1.48	1.48	1.48	1.48	1.48
13	75.0	1.48	1.48	1.48	1.48	1.48	1.48
14	75.6	1.48	1.48	1.48	1.48	1.48	1.48
15	76.3	1.48	1.48	1.48	1.48	1.48	1.48
16	76.9	1.48	1.48	1.48	1.48	1.48	1.48
17	77.5	1.48	1.48	1.48	1.48	1.48	1.48
18	78.1	1.48	1.48	1.48	1.48	1.48	1.48
19	78.8	1.48	1.48	1.48	1.48	1.48	1.48
20	79.4	1.48	1.48	1.48	1.48	1.48	1.48
21	80.0	1.48	3.05	3.05	3.05	3.05	3.05
22	80.6	1.48	2.93	2.93	2.93	2.93	2.93
23	81.3	1.48	2.82	2.82	2.82	2.82	2.82
24	81.9	1.48	2.71	2.71	2.71	2.71	2.71
25	82.5	1.48	2.60	2.60	2.60	2.60	2.60
26	83.1	1.48	2.49	2.49	2.49	2.49	2.49
27	83.8	1.48	2.38	2.38	2.38	2.38	2.38
28	84.4	1.48	2.26	2.26	2.26	2.26	2.26
29	85.0	1.48	2.15	2.15	2.15	2.15	2.15
30	85.6	1.48	2.04	2.04	2.04	2.04	2.04
31	86.3	1.48	1.93	1.93	1.93	1.93	1.93
32	86.9	1.48	1.82	1.82	1.82	1.82	1.82
33	87.5	1.48	1.71	1.71	1.71	1.71	1.71
34	88.1	1.48	1.59	1.59	1.59	1.59	1.59
35	88.8	1.48	1.48	1.48	1.48	1.48	1.48
36	89.4	1.48	1.48	1.48	1.48	1.48	1.48
37	90.0	1.48	1.48	1.48	1.48	1.48	1.48

07/07/1993 11:25 Filename: XAMPLE2C.OUT Page 6

NON-DIM CLEARANCE DISTRIBUTION(H/C) FOR PAD NUMBER 1

	I =	13	14	15
	AXIAL LENGTH IN.	2.202	2.227	2.252
J	DEG.			
1	67.5	1.48	1.48	1.48
2	68.1	1.48	1.48	1.48
3	68.8	1.48	1.48	1.48
4	69.4	1.48	1.48	1.48
5	70.0	1.48	1.48	1.48
6	70.6	1.48	1.48	1.48
7	71.3	1.48	1.48	1.48
8	71.9	1.48	1.48	1.48
9	72.5	1.48	1.48	1.48
10	73.1	1.48	1.48	1.48
11	73.8	1.48	1.48	1.48
12	74.4	1.48	1.48	1.48
13	75.0	1.48	1.48	1.48
14	75.6	1.48	1.48	1.48
15	76.3	1.48	1.48	1.48
16	76.9	1.48	1.48	1.48
17	77.5	1.48	1.48	1.48
18	78.1	1.48	1.48	1.48
19	78.8	1.48	1.48	1.48
20	79.4	1.48	1.48	1.48
21	80.0	3.05	3.05	1.48
22	80.6	2.93	2.93	1.48
23	81.3	2.82	2.82	1.48
24	81.9	2.71	2.71	1.48
25	82.5	2.60	2.60	1.48
26	83.1	2.49	2.49	1.48
27	83.8	2.38	2.38	1.48
28	84.4	2.26	2.26	1.48
29	85.0	2.15	2.15	1.48
30	85.6	2.04	2.04	1.48
31	86.3	1.93	1.93	1.48
32	86.9	1.82	1.82	1.48
33	87.5	1.71	1.71	1.48
34	88.1	1.59	1.59	1.48
35	88.8	1.48	1.48	1.48
36	89.4	1.48	1.48	1.48
37	90.0	1.48	1.48	1.48

MIN. CLEAR.= 1.4821 AT 90.000 DEGREES

MAX. CLEAR.= 3.0458 AT 80.000 DEGREES

Figure 5-12 (Cont.)

07/07/1993 11:25 Filename: XAMPLE2C.OUT Page 7

PRESSURE DISTRIBUTION (PSI) FOR PAD NUMBER 1

J	DEG.	I = 1	2	3	4	5	6
AXIAL LENGTH IN.		1.897	1.922	1.947	1.973	1.998	2.024
1	67.5	0.000E+00	17.4	28.1	36.6	43.7	50.0
2	68.1	0.000E+00	17.4	28.1	36.6	43.7	50.0
3	68.8	0.000E+00	17.4	28.1	36.6	43.7	50.0
4	69.4	0.000E+00	17.4	28.1	36.6	43.7	50.0
5	70.0	0.000E+00	17.4	28.1	36.6	43.7	50.0
6	70.6	0.000E+00	17.4	28.1	36.6	43.7	50.0
7	71.3	0.000E+00	17.4	28.1	36.6	43.7	50.0
8	71.9	0.000E+00	17.4	28.1	36.6	43.7	50.0
9	72.5	0.000E+00	17.4	28.1	36.6	43.7	50.0
10	73.1	0.000E+00	17.4	28.1	36.6	43.7	50.0
11	73.8	0.000E+00	17.4	28.1	36.6	43.7	50.0
12	74.4	0.000E+00	17.4	28.1	36.6	43.7	50.0
13	75.0	0.000E+00	17.4	28.1	36.6	43.7	50.0
14	75.6	0.000E+00	17.4	28.1	36.6	43.7	50.0
15	76.3	0.000E+00	17.4	28.1	36.6	43.7	50.0
16	76.9	0.000E+00	17.4	28.1	36.6	43.7	50.0
17	77.5	0.000E+00	17.4	28.1	36.6	43.7	50.0
18	78.1	0.000E+00	17.4	28.1	36.6	43.7	50.0
19	78.8	0.000E+00	17.4	28.1	36.6	43.7	50.0
20	79.4	0.000E+00	17.4	28.1	36.6	43.7	50.0
21	80.0	0.000E+00	17.4	28.1	36.6	43.7	50.0
22	80.6	0.000E+00	17.4	28.1	36.6	43.7	50.0
23	81.3	0.000E+00	17.4	28.1	36.6	43.7	50.0
24	81.9	0.000E+00	17.4	28.1	36.6	43.7	50.0
25	82.5	0.000E+00	17.4	28.1	36.6	43.7	50.0
26	83.1	0.000E+00	17.4	28.1	36.6	43.7	50.0
27	83.8	0.000E+00	17.4	28.1	36.6	43.7	50.0
28	84.4	0.000E+00	17.4	28.1	36.6	43.7	50.0
29	85.0	0.000E+00	17.4	28.1	36.6	43.7	50.0
30	85.6	0.000E+00	17.4	28.1	36.6	43.7	50.0
31	86.3	0.000E+00	17.4	28.1	36.6	43.7	50.0
32	86.9	0.000E+00	17.4	28.1	36.6	43.7	50.0
33	87.5	0.000E+00	17.4	28.1	36.6	43.7	50.0
34	88.1	0.000E+00	17.4	28.1	36.6	43.7	50.0
35	88.8	0.000E+00	17.4	28.1	36.6	43.7	50.0
36	89.4	0.000E+00	17.4	28.1	36.6	43.7	50.0
37	90.0	0.000E+00	17.4	28.1	36.6	43.7	50.0

07/07/1993 11:25 Filename: XAMPLE2C.OUT Page 8

PRESSURE DISTRIBUTION (PSI) FOR PAD NUMBER 1

J	DEG.	I = 7	8	9	10	11	12
AXIAL LENGTH IN.		2.049	2.074	2.100	2.125	2.151	2.176
1	67.5	50.0	53.1	55.5	57.0	57.4	56.9
2	68.1	50.0	52.5	54.5	55.8	56.2	55.7
3	68.8	50.0	52.1	53.7	54.8	55.1	54.7
4	69.4	50.0	51.7	53.1	54.0	54.3	53.9
5	70.0	50.0	51.4	52.6	53.3	53.5	53.2
6	70.6	50.0	51.2	52.1	52.7	52.9	52.7
7	71.3	50.0	51.0	51.7	52.3	52.4	52.2
8	71.9	50.0	50.8	51.4	51.9	52.0	51.8
9	72.5	50.0	50.7	51.2	51.5	51.7	51.5
10	73.1	50.0	50.5	51.0	51.3	51.4	51.3
11	73.8	50.0	50.4	50.8	51.1	51.1	51.0
12	74.4	50.0	50.4	50.7	50.9	50.9	50.8
13	75.0	50.0	50.3	50.5	50.7	50.8	50.7
14	75.6	50.0	50.2	50.4	50.6	50.6	50.5
15	76.3	50.0	50.2	50.3	50.4	50.4	50.4
16	76.9	50.0	50.1	50.2	50.2	50.3	50.2
17	77.5	50.0	50.0	50.0	50.0	50.0	50.0
18	78.1	50.0	50.0	50.0	50.0	50.0	50.0
19	78.8	50.0	50.0	50.0	50.0	50.0	50.0
20	79.4	50.0	50.0	50.0	50.0	50.0	50.0
21	80.0	50.0	50.0	50.0	50.0	50.0	50.0
22	80.6	50.0	50.9	51.0	51.1	51.1	51.1
23	81.3	50.0	51.7	51.9	52.1	52.1	52.1
24	81.9	50.0	52.5	52.8	53.0	53.1	53.1
25	82.5	50.0	53.2	53.7	54.0	54.1	54.0
26	83.1	50.0	53.9	54.5	54.9	55.1	54.9
27	83.8	50.0	54.4	55.3	55.8	56.0	55.8
28	84.4	50.0	55.0	56.1	56.7	56.9	56.7
29	85.0	50.0	55.4	56.8	57.6	57.9	57.6
30	85.6	50.0	55.8	57.5	58.5	58.8	58.4
31	86.3	50.0	56.0	58.1	59.3	59.7	59.3
32	86.9	50.0	56.1	58.7	60.1	60.5	60.1
33	87.5	50.0	56.1	59.1	60.7	61.2	60.7
34	88.1	50.0	55.7	59.1	60.9	61.4	60.9
35	88.8	50.0	54.9	58.2	60.0	60.6	60.0
36	89.4	50.0	53.9	56.7	58.4	58.9	58.3
37	90.0	50.0	53.1	55.5	57.0	57.4	56.9

Figure 5-12 (Cont.)

PRESSURE DISTRIBUTION (PSI) FOR PAD NUMBER 1

I =	13	14	15
AXIAL LENGTH IN.	2.202	2.227	2.252
J DEG.			
1 67.5	55.4	53.0	50.0
2 68.1	54.4	52.5	50.0
3 68.8	53.7	52.0	50.0
4 69.4	53.0	51.6	50.0
5 70.0	52.5	51.4	50.0
6 70.6	52.1	51.1	50.0
7 71.3	51.7	50.9	50.0
8 71.9	51.4	50.8	50.0
9 72.5	51.2	50.6	50.0
10 73.1	51.0	50.5	50.0
11 73.8	50.8	50.4	50.0
12 74.4	50.6	50.3	50.0
13 75.0	50.5	50.3	50.0
14 75.6	50.4	50.2	50.0
15 76.3	50.3	50.2	50.0
16 76.9	50.2	50.1	50.0
17 77.5	50.0	50.0	50.0
18 78.1	50.0	50.0	50.0
19 78.8	50.0	50.0	50.0
20 79.4	50.0	50.0	50.0
21 80.0	50.0	50.0	50.0
22 80.6	51.0	50.9	50.0
23 81.3	52.0	51.7	50.0
24 81.9	52.9	52.5	50.0
25 82.5	53.7	53.2	50.0
26 83.1	54.5	53.9	50.0
27 83.8	55.3	54.4	50.0
28 84.4	56.1	54.9	50.0
29 85.0	56.8	55.4	50.0
30 85.6	57.4	55.7	50.0
31 86.3	58.1	56.0	50.0
32 86.9	58.6	56.1	50.0
33 87.5	59.0	56.0	50.0
34 88.1	59.0	55.7	50.0
35 88.8	58.1	54.8	50.0
36 89.4	56.6	53.8	50.0
37 90.0	55.4	53.0	50.0

MIN. PRESS= 0.00000E+00 AT 90.000 DEGREES

MAX. PRESS= 61.436 AT 88.125 DEGREES

SINGLE TAPERED LAND SEAL
GFACE

-JOURNAL POSITION & FORCES

```
MINIMUM CLEARANCE     =   0.000296 IN
LOAD CAPACITY         =   13.08    LB
MOMENT ABOUT X-X      =   26.82    IN-LB
MOMENT ABOUT Y-Y      =  -5.263    IN-LB

POWER LOSS            =  0.2926E-01 HP

LEAKAGE AT INNER      = -0.2327E-04 LB/S
LEAKAGE AT OUTER      =  0.9632E-05 LB/S
```

-STIFFNESS COEFFICIENTS


```
PRINCIPAL  Z      KZZ =   4719.      LB/IN
CROSS-COUPLED     KZA =   9396.      LB/RAD
CROSS-COUPLED     KZB =  -2108.      LB/RAD
CROSS-COUPLED     KAZ =   9939.      IN-LB/IN
PRINCIPAL  A      KAA =  0.1990E+05  IN-LB/RAD
CROSS-COUPLED     KAB =  -4320.      IN-LB/RAD
CROSS-COUPLED     KBZ =  -1544.      IN-LB/IN
CROSS-COUPLED     KBA =  -2980.      IN-LB/RAD
PRINCIPAL  B      KBB =   1237.      IN-LB/RAD
```

-DAMPING COEFFICIENTS

```
PRINCIPAL  Z      DZZ =   1.608      LB-S/IN
CROSS-COUPLED     DZA =   3.256      LB-S/RAD
CROSS-COUPLED     DZB = -0.6525      LB-S/RAD
CROSS-COUPLED     DAZ =   3.255      IN-LB-S/IN
PRINCIPAL  A      DAA =   6.599      IN-LB-S/RAD
CROSS-COUPLED     DAB =  -1.312      IN-LB-S/RAD
CROSS-COUPLED     DBZ = -0.1294E-03  IN-LB-S/IN
CROSS-COUPLED     DBA =  -1.299      IN-LB-S/RAD
PRINCIPAL  B      DBB =  0.3091      IN-LB-S/RAD
```

SINGLE TAPERED LAND SEAL
GFACE

ECHO OF INPUT

NO MORE INPUT, PROGRAM TERMINATED
GRAM TERMINATED

Figure 5-12 (Cont.)

5.4 Hydrostatic Recess Seal

The configuration of the hydrostatic recess seal is shown on Fig. 5-13. It is a four recess seal and variable grid was used to get a fine grid definition at the recess extremities where large clearance changes occur. Since the entire seal was modeled, a large number of variable grid points must be entered. For this example, 137 entrys in the circumferential direction were inputted. For hydrostatic recesses, the additional input variables are the recess depths and locations and the location and sizes of the feeding orifices. The following quantities are applied.

Parameter in columns 1-10	Values in column 11-80
RECESS (identifies a recess hydrostatic seal)	Number of recesses in grid

Recess Depth, I,J locations of lower left and upper right corners. (Number of input lines equal number of recesses).

SPOTRE (identifies orifice compensation)	Number of orifices

I,J location of orifices. (Number of input lines equal number of orifices)

DO	Orifice diameter
PS	Supply pressure

The input and output results of the analysis are shown on Figures 5-14 and 5-15 respectively. The clearance and pressure distributions are shown on Figures 5-16 and 5-17.

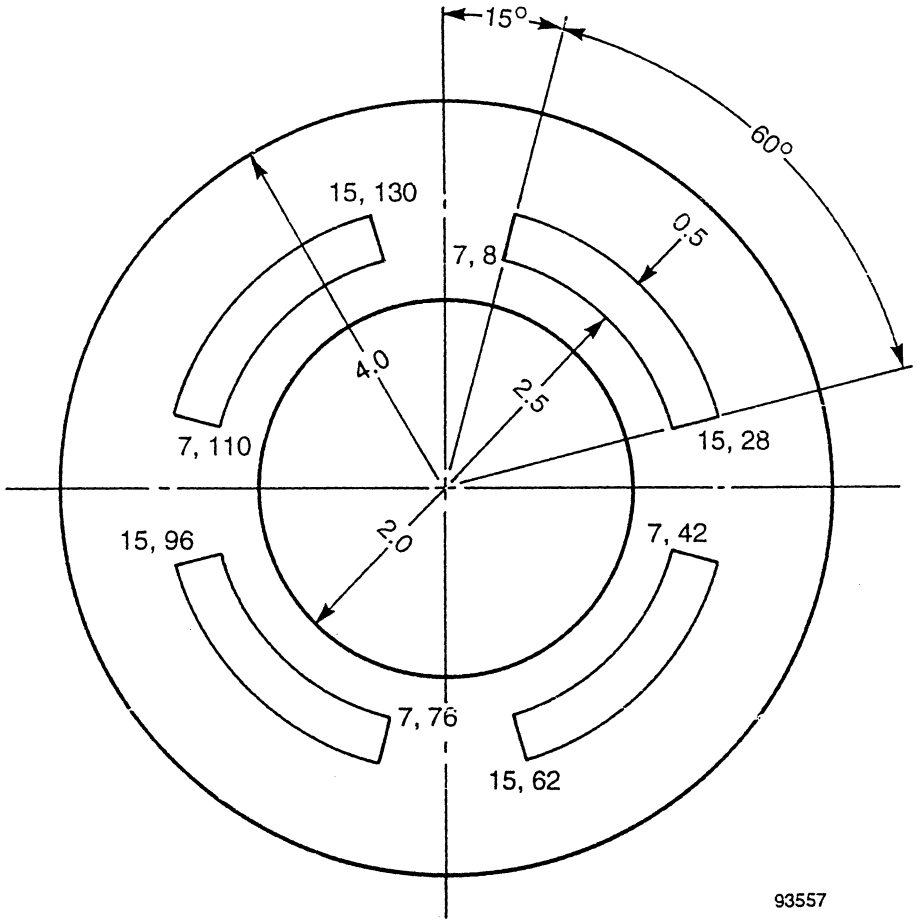

Figure 5-13 Sample Problem 4, Four Recess Seal Configuration

```
XAMPLE3A
RECESS SEAL
*
NPAD          1
JOINED
OPTION        1.
*
STIFFNESS     .0001
VGRIDM        25
2.0 2.1 2.2 2.3 2.4 2.45 2.5 2.55 2.6 2.7 2.8 2.9 2.95 3.0 3.05 3.1 3.2
3.3 3.4 3.5 3.6 3.7 3.8 3.9 4.0
VGRIDN        137.
0.0 5.0 10.0 11.0 12.0 13.0 14.0 15.0 16.0 17.0 18.0 19.0 20.0 25.0 30.0
35.0 40.0 45.0 50.0 55.0 60.0 65.0 70.0 71.0 72.0 73.0 74.0 75.0 76.0
77.0 78.0 79.0 80.0 85.0 90.0 95.0 100.0 101.0 102.0 103.0 104.0 105.0
106.0 107.0 108.0 109.0 110.0 115.0 120.0 125.0 130.0 135.0 140.0 145.0
150.0 155.0 160.0 161.0 162.0 163.0 164.0 165.0 166.0 167.0 168.0 169.0
170.0 175.0 180.0 185.0 190.0 191.0 192.0 193.0 194.0 195.0 196.0 197.0
198.0 199.0 200.0 205.0 210.0 215.0 220.0 225.0 230.0 235.0 240.0 245.0
250.0 251.0 252.0 253.0 254.0 255.0 256.0 257.0 258.0 259.0 260.0 265.0
270.0 275.0 280.0 281.0 282.0 283.0 284.0 285.0 286.0 287.0 288.0 289.0
290.0 295.0 300.0 305.0 310.0 315.0 320.0 325.0 330.0 335.0 340.0 341.0
342.0 343.0 344.0 345.0 346.0 347.0 348.0 349.0 350.0 355.0 360.0
*
CLEARANCE    0.0005
RECESS        4
             .0200 7 8 15 28
             .0200 7 42 15 62
             .0200 7 76 15 96
             .0200 7 110 15 130
SPOTRE       4
   11 18
   11 52
   11 86
   11 120
DO           .010
PS           200.
SPHEAT       1.4
GASCONST     2.469E5
ABSTEMP      1460.
VISCOSITY    0.535E-8
TOLERA        0.001
SPEED        0.0
PO            14.7
PLEFT          0.
PRITE          0.
PTOP           200.
PBOT           0.
END
```

Figure 5-14 Sample Problem 4, Four Recess Seal, Input File

```
06/01/1993  10:53        Filename: XAMPLE3A.OUT                          Page   1


RECESS SEAL
  GFACE

  ECHO OF INPUT

  *
  NPAD      =    1          NUMBER OF PADS
  JOINED BOUNDARY
  OPTION    =    1          GIVEN CLEARANCE FIND LOAD CAPACITY
  *
  ISTIF     =    1          STIFFNESS CALCULATION
  EXCITATION SPEED, RPM  =       0.0001
  GRIDM     =   25          GRID POINTS IN RADIAL DIRECTION
  VARIABLE GRID IN AXIAL DIRECTION
     2.000       2.100       2.200       2.300       2.400
     2.450       2.500       2.550       2.600       2.700
     2.800       2.900       2.950       3.000       3.050
     3.100       3.200       3.300       3.400       3.500
     3.600       3.700       3.800       3.900       4.000
  GRIDN     =  137          GRID POINTS IN CIRCUMFERENTIAL DIRECTION
  VARIABLE GRID IN CIRCUMFERENTIAL DIRECTION
    0.0000E+00   5.000       10.00       11.00       12.00
     13.00       14.00       15.00       16.00       17.00
     18.00       19.00       20.00       25.00       30.00
     35.00       40.00       45.00       50.00       55.00
     60.00       65.00       70.00       71.00       72.00
     73.00       74.00       75.00       76.00       77.00
     78.00       79.00       80.00       85.00       90.00
     95.00       100.0       101.0       102.0       103.0
     104.0       105.0       106.0       107.0       108.0
     109.0       110.0       115.0       120.0       125.0
     130.0       135.0       140.0       145.0       150.0
     155.0       160.0       161.0       162.0       163.0
     164.0       165.0       166.0       167.0       168.0
     169.0       170.0       175.0       180.0       185.0
     190.0       191.0       192.0       193.0       194.0
     195.0       196.0       197.0       198.0       199.0
     200.0       205.0       210.0       215.0       220.0
     225.0       230.0       235.0       240.0       245.0
     250.0       251.0       252.0       253.0       254.0
     255.0       256.0       257.0       258.0       259.0
     260.0       265.0       270.0       275.0       280.0
     281.0       282.0       283.0       284.0       285.0
     286.0       287.0       288.0       289.0       290.0
     295.0       300.0       305.0       310.0       315.0
     320.0       325.0       330.0       335.0       340.0
     341.0       342.0       343.0       344.0       345.0
     346.0       347.0       348.0       349.0       350.0
     355.0       360.0
  *
  CLEARANCE =  0.000500     BEARING CLEARANCE
  RECESS
  RECESS HEIGHT =      0.02000          IL =     7     JL =     8     IR =    15
    JR =   28
  RECESS
  RECESS HEIGHT =      0.02000          IL =     7     JL =    42     IR =    15
    JR =   62
  RECESS
  RECESS HEIGHT =      0.02000          IL =     7     JL =    76     IR =    15
    JR =   96
  RECESS
  RECESS HEIGHT =      0.02000          IL =     7     JL =   110     IR =    15
    JR =  130
  SPOT RECESSES
```

```
06/01/1993  10:53        Filename: XAMPLE3A.OUT                          Page   2

     11   18
     11   52
     11   86
     11  120
  DO        =    0.0100      ORIFICE DIAMETER
  PS        =    200.00      SUPPLY PRESSURE(ORIFICE)
  SPECIFIC  =    1.4000      SPECIFIC HEAT RATIO
  GAS CONST =  246900.0      GAS CONSTANT
  ABS TEMP  =   1460.00      ABSOLUTE TEMPERATURE
  VISCOSITY =  0.5350E-08    ABSOLUTE VISCOSITY
  TOL1      =    0.0010      TOLERANCE(COMPRESSIBILITY)
  TOL2      =    0.0000      ITERATION(OPTION 2)
  SPEED     =      0.00      ROTATIONAL SPEED IN RPM
  PO        =     14.70      REFERENCE(AMBIENT)  PRESSURE
  PLEFT     =      0.00      GAGE PRESSURE AT LEFT BOUNDARY
  PRITE     =      0.00      GAGE PRESSURE AT RIGHT BOUNDARY
  PTOP      =    200.00      GAGE PRESSURE AT TOP BOUNDARY
  PBOT      =      0.00      GAGE PRESSURE AT BOTTOM BOUNDARY


RECESS SEAL
  GFACE

  GAS THRUST BEARING/SEAL


  -BEARING GEOMETRY
   NUMBER OF PADS =     1
   OUTER DIAMETER =      8.000 IN
   INNER DIAMETER =      4.000 IN
        CLEARANCE =  0.000500 IN
   STARTING ANGLE =       0.00 DEG
        PAD ANGLE =     360.00 DEG

  -LUBRICANT PROPERTIES
                 VISCOSITY =  0.5350000E-08 LB-S/IN**2
             GAS CONSTANT =   246900.0      IN**2/S**2-R
         ABS. TEMPERATURE =   1460.000      DEG R

  -ORIFICE RELATED PROPERTIES
   ORIFICE
                  DIAMETER =  0.1000000E-01 IN
           DISCHARGE COEF =  0.9000000
          SUPPLY PRESSURE =   200.0000      PSI

      SPECIFIC HEAT RATIO =   1.400000

  ***RECESS TYPE

  -BOUNDARY CONDITIONS
      REFERENCE P =   14.70000      PSI
            PLEFT =  0.0000000E+00 PSI
            PRITE =  0.0000000E+00 PSI
             PTOP =   200.0000     PSI
             PBOT =  0.0000000E+00 PSI
            SPEED =  0.0000000E+00 RPM

  -BEARING MODEL
                M =   25
                N =  137
           JOINED =    T

   DZ
   0.250E-01 0.250E-01 0.250E-01 0.250E-01 0.125E-01
   0.125E-01 0.125E-01 0.125E-01 0.250E-01 0.250E-01
   0.250E-01 0.125E-01 0.125E-01 0.125E-01 0.125E-01
```

Figure 5-15 Sample Problem 4, Four Recess Seal, Output File

```
   0.250E-01 0.250E-01 0.250E-01 0.250E-01 0.250E-01
   0.250E-01 0.250E-01 0.250E-01 0.250E-01 0.250E-01

   DTHETA
   0.873E-01 0.873E-01 0.175E-01 0.175E-01 0.175E-01
   0.175E-01 0.175E-01 0.175E-01 0.175E-01 0.175E-01
   0.175E-01 0.175E-01 0.873E-01 0.873E-01 0.873E-01
   0.873E-01 0.873E-01 0.873E-01 0.873E-01 0.873E-01
   0.873E-01 0.873E-01 0.175E-01 0.175E-01 0.175E-01
   0.175E-01 0.175E-01 0.175E-01 0.175E-01 0.175E-01
   0.175E-01 0.175E-01 0.873E-01 0.873E-01 0.873E-01
   0.873E-01 0.175E-01 0.175E-01 0.175E-01 0.175E-01
   0.175E-01 0.175E-01 0.175E-01 0.175E-01 0.175E-01
   0.175E-01 0.873E-01 0.873E-01 0.873E-01 0.873E-01
   0.873E-01 0.873E-01 0.873E-01 0.873E-01 0.873E-01
   0.873E-01 0.175E-01 0.175E-01 0.175E-01 0.175E-01
   0.175E-01 0.175E-01 0.175E-01 0.175E-01 0.175E-01
   0.175E-01 0.873E-01 0.873E-01 0.873E-01 0.873E-01
   0.175E-01 0.175E-01 0.175E-01 0.175E-01 0.175E-01
   0.175E-01 0.175E-01 0.175E-01 0.175E-01 0.175E-01
   0.873E-01 0.873E-01 0.873E-01 0.873E-01 0.873E-01
   0.873E-01 0.873E-01 0.873E-01 0.873E-01 0.873E-01
   0.175E-01 0.175E-01 0.175E-01 0.175E-01 0.175E-01
   0.175E-01 0.175E-01 0.175E-01 0.175E-01 0.175E-01
   0.873E-01 0.873E-01 0.873E-01 0.873E-01 0.175E-01
   0.175E-01 0.175E-01 0.175E-01 0.175E-01 0.175E-01
   0.175E-01 0.175E-01 0.175E-01 0.175E-01 0.873E-01
   0.873E-01 0.873E-01 0.873E-01 0.873E-01 0.873E-01
   0.873E-01 0.873E-01 0.873E-01 0.873E-01 0.175E-01
   0.175E-01 0.175E-01 0.175E-01 0.175E-01 0.175E-01
   0.175E-01 0.175E-01 0.175E-01 0.175E-01 0.873E-01
   0.873E-01 0.873E-01

RECESS SEAL
  GFACE

  -MAXIMUM NUMBER OF ITERATIONS
     MXIT1 =   10       (FOR COMPRESSIBILITY)
     MXIT2 =    5       (FOR OPTION 2)

  -TOLERANCE
      TOL1 =   0.00100  (FOR COMPRESSIBILITY)
      TOL2 =   0.01000  (FOR OPTION 2)

  -OPTION  =    1       GIVEN CLEARANCE  FIND LOAD CAPACITY

RECESS SEAL
  GFACE

  SPECIFIED SOURCE
      1 F F F F F F F F F F F F F F F F F F F F F F F F F F
F
      2 F F F F F F F F F F F F F F F F F F F F F F F F F F
F
      3 F F F F F F F F F F F F F F F F F F F F F F F F F F
F
      4 F F F F F F F F F F F F F F F F F F F F F F F F F F
F
      5 F F F F F F F F F F F F F F F F F F F F F F F F F F
F
      6 F F F F F F F F F F F F F F F F F F F F F F F F F F
F
      7 F F F F F F F F F F F F F F F F F F F F F F F F F F
```



```
F
      8 F F F F F F F F F F F F F F F F F F F F F F F F F F
F
      9 F F F F F F F F F F F F F F F F F F F F F F F F F F
F
     10 F F F F F F F F F F F F F F F F F F F F F F F F F F
F
     11 F F F F F F F F F F F F F F F F F F F F F F F F F F
F
     12 F F F F F F F F F F F F F F F F F F F F F F F F F F
F
     13 F F F F F F F F F F F F F F F F F F F F F F F F F F
F
     14 F F F F F F F F F F F F F F F F F F F F F F F F F F
F
     15 F F F F F F F F F F F F F F F F F F F F F F F F F F
F
     16 F F F F F F F F F F F F F F F F F F F F F F F F F F
F
     17 F F F F F F F F F F F F F F F F F F F F F F F F F F
F
     18 F F F F F F F F F F T F F F F F F F F F F F F F F F
F
     19 F F F F F F F F F F F F F F F F F F F F F F F F F F
F
     20 F F F F F F F F F F F F F F F F F F F F F F F F F F
F
     21 F F F F F F F F F F F F F F F F F F F F F F F F F F
F
     22 F F F F F F F F F F F F F F F F F F F F F F F F F F
F
     23 F F F F F F F F F F F F F F F F F F F F F F F F F F
F
     24 F F F F F F F F F F F F F F F F F F F F F F F F F F
F
     25 F F F F F F F F F F F F F F F F F F F F F F F F F F
F
     26 F F F F F F F F F F F F F F F F F F F F F F F F F F
F
     27 F F F F F F F F F F F F F F F F F F F F F F F F F F
F
     28 F F F F F F F F F F F F F F F F F F F F F F F F F F
F
     29 F F F F F F F F F F F F F F F F F F F F F F F F F F
F
     30 F F F F F F F F F F F F F F F F F F F F F F F F F F
F
     31 F F F F F F F F F F F F F F F F F F F F F F F F F F
F
     32 F F F F F F F F F F F F F F F F F F F F F F F F F F
F
     33 F F F F F F F F F F F F F F F F F F F F F F F F F F
F
     34 F F F F F F F F F F F F F F F F F F F F F F F F F F
F
     35 F F F F F F F F F F F F F F F F F F F F F F F F F F
F
     36 F F F F F F F F F F F F F F F F F F F F F F F F F F
F
     37 F F F F F F F F F F F F F F F F F F F F F F F F F F
F
     38 F F F F F F F F F F F F F F F F F F F F F F F F F F
F
     39 F F F F F F F F F F F F F F F F F F F F F F F F F F
F
     40 F F F F F F F F F F F F F F F F F F F F F F F F F F
```

Figure 5-15 (Cont.)

```
F
    41 F F F F F F F F F F F F F F F F F F F F F F F F F
F
    42 F F F F F F F F F F F F F F F F F F F F F F F F F
F
    43 F F F F F F F F F F F F F F F F F F F F F F F F F
F
    44 F F F F F F F F F F F F F F F F F F F F F F F F F
F
    45 F F F F F F F F F F F F F F F F F F F F F F F F F
F
    46 F F F F F F F F F F F F F F F F F F F F F F F F F
F
    47 F F F F F F F F F F F F F F F F F F F F F F F F F
F
    48 F F F F F F F F F F F F F F F F F F F F F F F F F
F
    49 F F F F F F F F F F F F F F F F F F F F F F F F F
F
    50 F F F F F F F F F F F F F F F F F F F F F F F F F
F
    51 F F F F F F F F F F F F F F F F F F F F F F F F F
F
    52 F F F F F F F F F F T F F F F F F F F F F F F F F
F
    53 F F F F F F F F F F F F F F F F F F F F F F F F F
F
    54 F F F F F F F F F F F F F F F F F F F F F F F F F
F
    55 F F F F F F F F F F F F F F F F F F F F F F F F F
F
    56 F F F F F F F F F F F F F F F F F F F F F F F F F
F
    57 F F F F F F F F F F F F F F F F F F F F F F F F F
F
    58 F F F F F F F F F F F F F F F F F F F F F F F F F
F
    59 F F F F F F F F F F F F F F F F F F F F F F F F F
F
    60 F F F F F F F F F F F F F F F F F F F F F F F F F
F
    61 F F F F F F F F F F F F F F F F F F F F F F F F F
F
    62 F F F F F F F F F F F F F F F F F F F F F F F F F
F
    63 F F F F F F F F F F F F F F F F F F F F F F F F F
F
    64 F F F F F F F F F F F F F F F F F F F F F F F F F
F
    65 F F F F F F F F F F F F F F F F F F F F F F F F F
F
    66 F F F F F F F F F F F F F F F F F F F F F F F F F
F
    67 F F F F F F F F F F F F F F F F F F F F F F F F F
F
    68 F F F F F F F F F F F F F F F F F F F F F F F F F
F
    69 F F F F F F F F F F F F F F F F F F F F F F F F F
F
    70 F F F F F F F F F F F F F F F F F F F F F F F F F
F
    71 F F F F F F F F F F F F F F F F F F F F F F F F F
F
    72 F F F F F F F F F F F F F F F F F F F F F F F F F
F
    73 F F F F F F F F F F F F F F F F F F F F F F F F F
```



```
F
    74 F F F F F F F F F F F F F F F F F F F F F F F F F
F
    75 F F F F F F F F F F F F F F F F F F F F F F F F F
F
    76 F F F F F F F F F F F F F F F F F F F F F F F F F
F
    77 F F F F F F F F F F F F F F F F F F F F F F F F F
F
    78 F F F F F F F F F F F F F F F F F F F F F F F F F
F
    79 F F F F F F F F F F F F F F F F F F F F F F F F F
F
    80 F F F F F F F F F F F F F F F F F F F F F F F F F
F
    81 F F F F F F F F F F F F F F F F F F F F F F F F F
F
    82 F F F F F F F F F F F F F F F F F F F F F F F F F
F
    83 F F F F F F F F F F F F F F F F F F F F F F F F F
F
    84 F F F F F F F F F F F F F F F F F F F F F F F F F
F
    85 F F F F F F F F F F F F F F F F F F F F F F F F F
F
    86 F F F F F F F F F F T F F F F F F F F F F F F F F
F
    87 F F F F F F F F F F F F F F F F F F F F F F F F F
F
    88 F F F F F F F F F F F F F F F F F F F F F F F F F
F
    89 F F F F F F F F F F F F F F F F F F F F F F F F F
F
    90 F F F F F F F F F F F F F F F F F F F F F F F F F
F
    91 F F F F F F F F F F F F F F F F F F F F F F F F F
F
    92 F F F F F F F F F F F F F F F F F F F F F F F F F
F
    93 F F F F F F F F F F F F F F F F F F F F F F F F F
F
    94 F F F F F F F F F F F F F F F F F F F F F F F F F
F
    95 F F F F F F F F F F F F F F F F F F F F F F F F F
F
    96 F F F F F F F F F F F F F F F F F F F F F F F F F
F
    97 F F F F F F F F F F F F F F F F F F F F F F F F F
F
    98 F F F F F F F F F F F F F F F F F F F F F F F F F
F
    99 F F F F F F F F F F F F F F F F F F F F F F F F F
F
   100 F F F F F F F F F F F F F F F F F F F F F F F F F
F
   101 F F F F F F F F F F F F F F F F F F F F F F F F F
F
   102 F F F F F F F F F F F F F F F F F F F F F F F F F
F
   103 F F F F F F F F F F F F F F F F F F F F F F F F F
F
   104 F F F F F F F F F F F F F F F F F F F F F F F F F
F
   105 F F F F F F F F F F F F F F F F F F F F F F F F F
F
   106 F F F F F F F F F F F F F F F F F F F F F F F F F
```

Figure 5-15 (Cont.)

F																								
	107	F	F	F	F	F	F	F	F	F	F	F	F	F	F	F	F	F	F	F	F	F	F	F
F																								
	108	F	F	F	F	F	F	F	F	F	F	F	F	F	F	F	F	F	F	F	F	F	F	F
F																								
	109	F	F	F	F	F	F	F	F	F	F	F	F	F	F	F	F	F	F	F	F	F	F	F
F																								
	110	F	F	F	F	F	F	F	F	F	F	F	F	F	F	F	F	F	F	F	F	F	F	F
F																								
	111	F	F	F	F	F	F	F	F	F	F	F	F	F	F	F	F	F	F	F	F	F	F	F
F																								
	112	F	F	F	F	F	F	F	F	F	F	F	F	F	F	F	F	F	F	F	F	F	F	F
F																								
	113	F	F	F	F	F	F	F	F	F	F	F	F	F	F	F	F	F	F	F	F	F	F	F
F																								
	114	F	F	F	F	F	F	F	F	F	F	F	F	F	F	F	F	F	F	F	F	F	F	F
F																								
	115	F	F	F	F	F	F	F	F	F	F	F	F	F	F	F	F	F	F	F	F	F	F	F
F																								
	116	F	F	F	F	F	F	F	F	F	F	F	F	F	F	F	F	F	F	F	F	F	F	F
F																								
	117	F	F	F	F	F	F	F	F	F	F	F	F	F	F	F	F	F	F	F	F	F	F	F
F																								
	118	F	F	F	F	F	F	F	F	F	F	F	F	F	F	F	F	F	F	F	F	F	F	F
F																								
	119	F	F	F	F	F	F	F	F	F	F	F	F	F	F	F	F	F	F	F	F	F	F	F
F																								
	120	F	F	F	F	F	F	F	F	F	F	T	F	F	F	F	F	F	F	F	F	F	F	F
F																								
	121	F	F	F	F	F	F	F	F	F	F	F	F	F	F	F	F	F	F	F	F	F	F	F
F																								
	122	F	F	F	F	F	F	F	F	F	F	F	F	F	F	F	F	F	F	F	F	F	F	F
F																								
	123	F	F	F	F	F	F	F	F	F	F	F	F	F	F	F	F	F	F	F	F	F	F	F
F																								
	124	F	F	F	F	F	F	F	F	F	F	F	F	F	F	F	F	F	F	F	F	F	F	F
F																								
	125	F	F	F	F	F	F	F	F	F	F	F	F	F	F	F	F	F	F	F	F	F	F	F
F																								
	126	F	F	F	F	F	F	F	F	F	F	F	F	F	F	F	F	F	F	F	F	F	F	F
F																								
	127	F	F	F	F	F	F	F	F	F	F	F	F	F	F	F	F	F	F	F	F	F	F	F
F																								
	128	F	F	F	F	F	F	F	F	F	F	F	F	F	F	F	F	F	F	F	F	F	F	F
F																								
	129	F	F	F	F	F	F	F	F	F	F	F	F	F	F	F	F	F	F	F	F	F	F	F
F																								
	130	F	F	F	F	F	F	F	F	F	F	F	F	F	F	F	F	F	F	F	F	F	F	F
F																								
	131	F	F	F	F	F	F	F	F	F	F	F	F	F	F	F	F	F	F	F	F	F	F	F
F																								
	132	F	F	F	F	F	F	F	F	F	F	F	F	F	F	F	F	F	F	F	F	F	F	F
F																								
	133	F	F	F	F	F	F	F	F	F	F	F	F	F	F	F	F	F	F	F	F	F	F	F
F																								
	134	F	F	F	F	F	F	F	F	F	F	F	F	F	F	F	F	F	F	F	F	F	F	F
F																								
	135	F	F	F	F	F	F	F	F	F	F	F	F	F	F	F	F	F	F	F	F	F	F	F
F																								
	136	F	F	F	F	F	F	F	F	F	F	F	F	F	F	F	F	F	F	F	F	F	F	F
F																								
	137	F	F	F	F	F	F	F	F	F	F	F	F	F	F	F	F	F	F	F	F	F	F	F
F																								

NON-DIM CLEARANCE DISTRIBUTION(H/C) FOR PAD NUMBER 1

	I =	1	2	3	4	5	6
	AXIAL LENGTH IN.	2.000	2.100	2.200	2.300	2.400	2.450
J	DEG.						
1	0.0	1.00	1.00	1.00	1.00	1.00	1.00
2	5.0	1.00	1.00	1.00	1.00	1.00	1.00
3	10.0	1.00	1.00	1.00	1.00	1.00	1.00
4	11.0	1.00	1.00	1.00	1.00	1.00	1.00
5	12.0	1.00	1.00	1.00	1.00	1.00	1.00
6	13.0	1.00	1.00	1.00	1.00	1.00	1.00
7	14.0	1.00	1.00	1.00	1.00	1.00	1.00
8	15.0	1.00	1.00	1.00	1.00	1.00	1.00
9	16.0	1.00	1.00	1.00	1.00	1.00	1.00
10	17.0	1.00	1.00	1.00	1.00	1.00	1.00
11	18.0	1.00	1.00	1.00	1.00	1.00	1.00
12	19.0	1.00	1.00	1.00	1.00	1.00	1.00
13	20.0	1.00	1.00	1.00	1.00	1.00	1.00
14	25.0	1.00	1.00	1.00	1.00	1.00	1.00
15	30.0	1.00	1.00	1.00	1.00	1.00	1.00
16	35.0	1.00	1.00	1.00	1.00	1.00	1.00
17	40.0	1.00	1.00	1.00	1.00	1.00	1.00
18	45.0	1.00	1.00	1.00	1.00	1.00	1.00
19	50.0	1.00	1.00	1.00	1.00	1.00	1.00
20	55.0	1.00	1.00	1.00	1.00	1.00	1.00
21	60.0	1.00	1.00	1.00	1.00	1.00	1.00
22	65.0	1.00	1.00	1.00	1.00	1.00	1.00
23	70.0	1.00	1.00	1.00	1.00	1.00	1.00
24	71.0	1.00	1.00	1.00	1.00	1.00	1.00
25	72.0	1.00	1.00	1.00	1.00	1.00	1.00
26	73.0	1.00	1.00	1.00	1.00	1.00	1.00
27	74.0	1.00	1.00	1.00	1.00	1.00	1.00
28	75.0	1.00	1.00	1.00	1.00	1.00	1.00
29	76.0	1.00	1.00	1.00	1.00	1.00	1.00
30	77.0	1.00	1.00	1.00	1.00	1.00	1.00
31	78.0	1.00	1.00	1.00	1.00	1.00	1.00
32	79.0	1.00	1.00	1.00	1.00	1.00	1.00
33	80.0	1.00	1.00	1.00	1.00	1.00	1.00
34	85.0	1.00	1.00	1.00	1.00	1.00	1.00
35	90.0	1.00	1.00	1.00	1.00	1.00	1.00
36	95.0	1.00	1.00	1.00	1.00	1.00	1.00
37	100.0	1.00	1.00	1.00	1.00	1.00	1.00
38	101.0	1.00	1.00	1.00	1.00	1.00	1.00
39	102.0	1.00	1.00	1.00	1.00	1.00	1.00
40	103.0	1.00	1.00	1.00	1.00	1.00	1.00
41	104.0	1.00	1.00	1.00	1.00	1.00	1.00
42	105.0	1.00	1.00	1.00	1.00	1.00	1.00
43	106.0	1.00	1.00	1.00	1.00	1.00	1.00
44	107.0	1.00	1.00	1.00	1.00	1.00	1.00
45	108.0	1.00	1.00	1.00	1.00	1.00	1.00
46	109.0	1.00	1.00	1.00	1.00	1.00	1.00
47	110.0	1.00	1.00	1.00	1.00	1.00	1.00
48	115.0	1.00	1.00	1.00	1.00	1.00	1.00
49	120.0	1.00	1.00	1.00	1.00	1.00	1.00
50	125.0	1.00	1.00	1.00	1.00	1.00	1.00
51	130.0	1.00	1.00	1.00	1.00	1.00	1.00
52	135.0	1.00	1.00	1.00	1.00	1.00	1.00
53	140.0	1.00	1.00	1.00	1.00	1.00	1.00
54	145.0	1.00	1.00	1.00	1.00	1.00	1.00
55	150.0	1.00	1.00	1.00	1.00	1.00	1.00
56	155.0	1.00	1.00	1.00	1.00	1.00	1.00
57	160.0	1.00	1.00	1.00	1.00	1.00	1.00
58	161.0	1.00	1.00	1.00	1.00	1.00	1.00
59	162.0	1.00	1.00	1.00	1.00	1.00	1.00

Figure 5-15 (Cont.)

60	163.0	1.00	1.00	1.00	1.00	1.00	1.00
61	164.0	1.00	1.00	1.00	1.00	1.00	1.00
62	165.0	1.00	1.00	1.00	1.00	1.00	1.00
63	166.0	1.00	1.00	1.00	1.00	1.00	1.00
64	167.0	1.00	1.00	1.00	1.00	1.00	1.00
65	168.0	1.00	1.00	1.00	1.00	1.00	1.00
66	169.0	1.00	1.00	1.00	1.00	1.00	1.00
67	170.0	1.00	1.00	1.00	1.00	1.00	1.00
68	175.0	1.00	1.00	1.00	1.00	1.00	1.00
69	180.0	1.00	1.00	1.00	1.00	1.00	1.00
70	185.0	1.00	1.00	1.00	1.00	1.00	1.00
71	190.0	1.00	1.00	1.00	1.00	1.00	1.00
72	191.0	1.00	1.00	1.00	1.00	1.00	1.00
73	192.0	1.00	1.00	1.00	1.00	1.00	1.00
74	193.0	1.00	1.00	1.00	1.00	1.00	1.00
75	194.0	1.00	1.00	1.00	1.00	1.00	1.00
76	195.0	1.00	1.00	1.00	1.00	1.00	1.00
77	196.0	1.00	1.00	1.00	1.00	1.00	1.00
78	197.0	1.00	1.00	1.00	1.00	1.00	1.00
79	198.0	1.00	1.00	1.00	1.00	1.00	1.00
80	199.0	1.00	1.00	1.00	1.00	1.00	1.00
81	200.0	1.00	1.00	1.00	1.00	1.00	1.00
82	205.0	1.00	1.00	1.00	1.00	1.00	1.00
83	210.0	1.00	1.00	1.00	1.00	1.00	1.00
84	215.0	1.00	1.00	1.00	1.00	1.00	1.00
85	220.0	1.00	1.00	1.00	1.00	1.00	1.00
86	225.0	1.00	1.00	1.00	1.00	1.00	1.00
87	230.0	1.00	1.00	1.00	1.00	1.00	1.00
88	235.0	1.00	1.00	1.00	1.00	1.00	1.00
89	240.0	1.00	1.00	1.00	1.00	1.00	1.00
90	245.0	1.00	1.00	1.00	1.00	1.00	1.00
91	250.0	1.00	1.00	1.00	1.00	1.00	1.00
92	251.0	1.00	1.00	1.00	1.00	1.00	1.00
93	252.0	1.00	1.00	1.00	1.00	1.00	1.00
94	253.0	1.00	1.00	1.00	1.00	1.00	1.00
95	254.0	1.00	1.00	1.00	1.00	1.00	1.00
96	255.0	1.00	1.00	1.00	1.00	1.00	1.00
97	256.0	1.00	1.00	1.00	1.00	1.00	1.00
98	257.0	1.00	1.00	1.00	1.00	1.00	1.00
99	258.0	1.00	1.00	1.00	1.00	1.00	1.00
100	259.0	1.00	1.00	1.00	1.00	1.00	1.00
101	260.0	1.00	1.00	1.00	1.00	1.00	1.00
102	265.0	1.00	1.00	1.00	1.00	1.00	1.00
103	270.0	1.00	1.00	1.00	1.00	1.00	1.00
104	275.0	1.00	1.00	1.00	1.00	1.00	1.00
105	280.0	1.00	1.00	1.00	1.00	1.00	1.00
106	281.0	1.00	1.00	1.00	1.00	1.00	1.00
107	282.0	1.00	1.00	1.00	1.00	1.00	1.00
108	283.0	1.00	1.00	1.00	1.00	1.00	1.00
109	284.0	1.00	1.00	1.00	1.00	1.00	1.00
110	285.0	1.00	1.00	1.00	1.00	1.00	1.00
111	286.0	1.00	1.00	1.00	1.00	1.00	1.00
112	287.0	1.00	1.00	1.00	1.00	1.00	1.00
113	288.0	1.00	1.00	1.00	1.00	1.00	1.00
114	289.0	1.00	1.00	1.00	1.00	1.00	1.00
115	290.0	1.00	1.00	1.00	1.00	1.00	1.00
116	295.0	1.00	1.00	1.00	1.00	1.00	1.00
117	300.0	1.00	1.00	1.00	1.00	1.00	1.00
118	305.0	1.00	1.00	1.00	1.00	1.00	1.00
119	310.0	1.00	1.00	1.00	1.00	1.00	1.00
120	315.0	1.00	1.00	1.00	1.00	1.00	1.00
121	320.0	1.00	1.00	1.00	1.00	1.00	1.00
122	325.0	1.00	1.00	1.00	1.00	1.00	1.00
123	330.0	1.00	1.00	1.00	1.00	1.00	1.00
124	335.0	1.00	1.00	1.00	1.00	1.00	1.00
125	340.0	1.00	1.00	1.00	1.00	1.00	1.00

126	341.0	1.00	1.00	1.00	1.00	1.00	1.00
127	342.0	1.00	1.00	1.00	1.00	1.00	1.00
128	343.0	1.00	1.00	1.00	1.00	1.00	1.00
129	344.0	1.00	1.00	1.00	1.00	1.00	1.00
130	345.0	1.00	1.00	1.00	1.00	1.00	1.00
131	346.0	1.00	1.00	1.00	1.00	1.00	1.00
132	347.0	1.00	1.00	1.00	1.00	1.00	1.00
133	348.0	1.00	1.00	1.00	1.00	1.00	1.00
134	349.0	1.00	1.00	1.00	1.00	1.00	1.00
135	350.0	1.00	1.00	1.00	1.00	1.00	1.00
136	355.0	1.00	1.00	1.00	1.00	1.00	1.00
137	360.0	1.00	1.00	1.00	1.00	1.00	1.00

Figure 5-15 (Cont.)

NON-DIM CLEARANCE DISTRIBUTION(H/C) FOR PAD NUMBER 1

I = 7 8 9 10 11 12

AXIAL LENGTH IN.

J	DEG.	2.500	2.550	2.600	2.700	2.800	2.900
1	0.0	1.00	1.00	1.00	1.00	1.00	1.00
2	5.0	1.00	1.00	1.00	1.00	1.00	1.00
3	10.0	1.00	1.00	1.00	1.00	1.00	1.00
4	11.0	1.00	1.00	1.00	1.00	1.00	1.00
5	12.0	1.00	1.00	1.00	1.00	1.00	1.00
6	13.0	1.00	1.00	1.00	1.00	1.00	1.00
7	14.0	1.00	1.00	1.00	1.00	1.00	1.00
8	15.0	41.0	41.0	41.0	41.0	41.0	41.0
9	16.0	41.0	41.0	41.0	41.0	41.0	41.0
10	17.0	41.0	41.0	41.0	41.0	41.0	41.0
11	18.0	41.0	41.0	41.0	41.0	41.0	41.0
12	19.0	41.0	41.0	41.0	41.0	41.0	41.0
13	20.0	41.0	41.0	41.0	41.0	41.0	41.0
14	25.0	41.0	41.0	41.0	41.0	41.0	41.0
15	30.0	41.0	41.0	41.0	41.0	41.0	41.0
16	35.0	41.0	41.0	41.0	41.0	41.0	41.0
17	40.0	41.0	41.0	41.0	41.0	41.0	41.0
18	45.0	41.0	41.0	41.0	41.0	41.0	41.0
19	50.0	41.0	41.0	41.0	41.0	41.0	41.0
20	55.0	41.0	41.0	41.0	41.0	41.0	41.0
21	60.0	41.0	41.0	41.0	41.0	41.0	41.0
22	65.0	41.0	41.0	41.0	41.0	41.0	41.0
23	70.0	41.0	41.0	41.0	41.0	41.0	41.0
24	71.0	41.0	41.0	41.0	41.0	41.0	41.0
25	72.0	41.0	41.0	41.0	41.0	41.0	41.0
26	73.0	41.0	41.0	41.0	41.0	41.0	41.0
27	74.0	41.0	41.0	41.0	41.0	41.0	41.0
28	75.0	41.0	41.0	41.0	41.0	41.0	41.0
29	76.0	1.00	1.00	1.00	1.00	1.00	1.00
30	77.0	1.00	1.00	1.00	1.00	1.00	1.00
31	78.0	1.00	1.00	1.00	1.00	1.00	1.00
32	79.0	1.00	1.00	1.00	1.00	1.00	1.00
33	80.0	1.00	1.00	1.00	1.00	1.00	1.00
34	85.0	1.00	1.00	1.00	1.00	1.00	1.00
35	90.0	1.00	1.00	1.00	1.00	1.00	1.00
36	95.0	1.00	1.00	1.00	1.00	1.00	1.00
37	100.0	1.00	1.00	1.00	1.00	1.00	1.00
38	101.0	1.00	1.00	1.00	1.00	1.00	1.00
39	102.0	1.00	1.00	1.00	1.00	1.00	1.00
40	103.0	1.00	1.00	1.00	1.00	1.00	1.00
41	104.0	1.00	1.00	1.00	1.00	1.00	1.00
42	105.0	41.0	41.0	41.0	41.0	41.0	41.0
43	106.0	41.0	41.0	41.0	41.0	41.0	41.0
44	107.0	41.0	41.0	41.0	41.0	41.0	41.0
45	108.0	41.0	41.0	41.0	41.0	41.0	41.0
46	109.0	41.0	41.0	41.0	41.0	41.0	41.0
47	110.0	41.0	41.0	41.0	41.0	41.0	41.0
48	115.0	41.0	41.0	41.0	41.0	41.0	41.0
49	120.0	41.0	41.0	41.0	41.0	41.0	41.0
50	125.0	41.0	41.0	41.0	41.0	41.0	41.0
51	130.0	41.0	41.0	41.0	41.0	41.0	41.0
52	135.0	41.0	41.0	41.0	41.0	41.0	41.0
53	140.0	41.0	41.0	41.0	41.0	41.0	41.0
54	145.0	41.0	41.0	41.0	41.0	41.0	41.0
55	150.0	41.0	41.0	41.0	41.0	41.0	41.0
56	155.0	41.0	41.0	41.0	41.0	41.0	41.0
57	160.0	41.0	41.0	41.0	41.0	41.0	41.0
58	161.0	41.0	41.0	41.0	41.0	41.0	41.0
59	162.0	41.0	41.0	41.0	41.0	41.0	41.0

60	163.0	41.0	41.0	41.0	41.0	41.0	41.0
61	164.0	41.0	41.0	41.0	41.0	41.0	41.0
62	165.0	41.0	41.0	41.0	41.0	41.0	41.0
63	166.0	1.00	1.00	1.00	1.00	1.00	1.00
64	167.0	1.00	1.00	1.00	1.00	1.00	1.00
65	168.0	1.00	1.00	1.00	1.00	1.00	1.00
66	169.0	1.00	1.00	1.00	1.00	1.00	1.00
67	170.0	1.00	1.00	1.00	1.00	1.00	1.00
68	175.0	1.00	1.00	1.00	1.00	1.00	1.00
69	180.0	1.00	1.00	1.00	1.00	1.00	1.00
70	185.0	1.00	1.00	1.00	1.00	1.00	1.00
71	190.0	1.00	1.00	1.00	1.00	1.00	1.00
72	191.0	1.00	1.00	1.00	1.00	1.00	1.00
73	192.0	1.00	1.00	1.00	1.00	1.00	1.00
74	193.0	1.00	1.00	1.00	1.00	1.00	1.00
75	194.0	1.00	1.00	1.00	1.00	1.00	1.00
76	195.0	41.0	41.0	41.0	41.0	41.0	41.0
77	196.0	41.0	41.0	41.0	41.0	41.0	41.0
78	197.0	41.0	41.0	41.0	41.0	41.0	41.0
79	198.0	41.0	41.0	41.0	41.0	41.0	41.0
80	199.0	41.0	41.0	41.0	41.0	41.0	41.0
81	200.0	41.0	41.0	41.0	41.0	41.0	41.0
82	205.0	41.0	41.0	41.0	41.0	41.0	41.0
83	210.0	41.0	41.0	41.0	41.0	41.0	41.0
84	215.0	41.0	41.0	41.0	41.0	41.0	41.0
85	220.0	41.0	41.0	41.0	41.0	41.0	41.0
86	225.0	41.0	41.0	41.0	41.0	41.0	41.0
87	230.0	41.0	41.0	41.0	41.0	41.0	41.0
88	235.0	41.0	41.0	41.0	41.0	41.0	41.0
89	240.0	41.0	41.0	41.0	41.0	41.0	41.0
90	245.0	41.0	41.0	41.0	41.0	41.0	41.0
91	250.0	41.0	41.0	41.0	41.0	41.0	41.0
92	251.0	41.0	41.0	41.0	41.0	41.0	41.0
93	252.0	41.0	41.0	41.0	41.0	41.0	41.0
94	253.0	41.0	41.0	41.0	41.0	41.0	41.0
95	254.0	41.0	41.0	41.0	41.0	41.0	41.0
96	255.0	41.0	41.0	41.0	41.0	41.0	41.0
97	256.0	1.00	1.00	1.00	1.00	1.00	1.00
98	257.0	1.00	1.00	1.00	1.00	1.00	1.00
99	258.0	1.00	1.00	1.00	1.00	1.00	1.00
100	259.0	1.00	1.00	1.00	1.00	1.00	1.00
101	260.0	1.00	1.00	1.00	1.00	1.00	1.00
102	265.0	1.00	1.00	1.00	1.00	1.00	1.00
103	270.0	1.00	1.00	1.00	1.00	1.00	1.00
104	275.0	1.00	1.00	1.00	1.00	1.00	1.00
105	280.0	1.00	1.00	1.00	1.00	1.00	1.00
106	281.0	1.00	1.00	1.00	1.00	1.00	1.00
107	282.0	1.00	1.00	1.00	1.00	1.00	1.00
108	283.0	1.00	1.00	1.00	1.00	1.00	1.00
109	284.0	1.00	1.00	1.00	1.00	1.00	1.00
110	285.0	41.0	41.0	41.0	41.0	41.0	41.0
111	286.0	41.0	41.0	41.0	41.0	41.0	41.0
112	287.0	41.0	41.0	41.0	41.0	41.0	41.0
113	288.0	41.0	41.0	41.0	41.0	41.0	41.0
114	289.0	41.0	41.0	41.0	41.0	41.0	41.0
115	290.0	41.0	41.0	41.0	41.0	41.0	41.0
116	295.0	41.0	41.0	41.0	41.0	41.0	41.0
117	300.0	41.0	41.0	41.0	41.0	41.0	41.0
118	305.0	41.0	41.0	41.0	41.0	41.0	41.0
119	310.0	41.0	41.0	41.0	41.0	41.0	41.0
120	315.0	41.0	41.0	41.0	41.0	41.0	41.0
121	320.0	41.0	41.0	41.0	41.0	41.0	41.0
122	325.0	41.0	41.0	41.0	41.0	41.0	41.0
123	330.0	41.0	41.0	41.0	41.0	41.0	41.0
124	335.0	41.0	41.0	41.0	41.0	41.0	41.0
125	340.0	41.0	41.0	41.0	41.0	41.0	41.0

Figure 5-15 (Cont.)

126	341.0	41.0	41.0	41.0	41.0	41.0	41.0
127	342.0	41.0	41.0	41.0	41.0	41.0	41.0
128	343.0	41.0	41.0	41.0	41.0	41.0	41.0
129	344.0	41.0	41.0	41.0	41.0	41.0	41.0
130	345.0	41.0	41.0	41.0	41.0	41.0	41.0
131	346.0	1.00	1.00	1.00	1.00	1.00	1.00
132	347.0	1.00	1.00	1.00	1.00	1.00	1.00
133	348.0	1.00	1.00	1.00	1.00	1.00	1.00
134	349.0	1.00	1.00	1.00	1.00	1.00	1.00
135	350.0	1.00	1.00	1.00	1.00	1.00	1.00
136	355.0	1.00	1.00	1.00	1.00	1.00	1.00
137	360.0	1.00	1.00	1.00	1.00	1.00	1.00

NON-DIM CLEARANCE DISTRIBUTION(H/C) FOR PAD NUMBER 1

	I =	13	14	15	16	17	18
AXIAL LENGTH IN.		2.950	3.000	3.050	3.100	3.200	3.300
J	DEG.						
1	0.0	1.00	1.00	1.00	1.00	1.00	1.00
2	5.0	1.00	1.00	1.00	1.00	1.00	1.00
3	10.0	1.00	1.00	1.00	1.00	1.00	1.00
4	11.0	1.00	1.00	1.00	1.00	1.00	1.00
5	12.0	1.00	1.00	1.00	1.00	1.00	1.00
6	13.0	1.00	1.00	1.00	1.00	1.00	1.00
7	14.0	1.00	1.00	1.00	1.00	1.00	1.00
8	15.0	41.0	41.0	41.0	1.00	1.00	1.00
9	16.0	41.0	41.0	41.0	1.00	1.00	1.00
10	17.0	41.0	41.0	41.0	1.00	1.00	1.00
11	18.0	41.0	41.0	41.0	1.00	1.00	1.00
12	19.0	41.0	41.0	41.0	1.00	1.00	1.00
13	20.0	41.0	41.0	41.0	1.00	1.00	1.00
14	25.0	41.0	41.0	41.0	1.00	1.00	1.00
15	30.0	41.0	41.0	41.0	1.00	1.00	1.00
16	35.0	41.0	41.0	41.0	1.00	1.00	1.00
17	40.0	41.0	41.0	41.0	1.00	1.00	1.00
18	45.0	41.0	41.0	41.0	1.00	1.00	1.00
19	50.0	41.0	41.0	41.0	1.00	1.00	1.00
20	55.0	41.0	41.0	41.0	1.00	1.00	1.00
21	60.0	41.0	41.0	41.0	1.00	1.00	1.00
22	65.0	41.0	41.0	41.0	1.00	1.00	1.00
23	70.0	41.0	41.0	41.0	1.00	1.00	1.00
24	71.0	41.0	41.0	41.0	1.00	1.00	1.00
25	72.0	41.0	41.0	41.0	1.00	1.00	1.00
26	73.0	41.0	41.0	41.0	1.00	1.00	1.00
27	74.0	41.0	41.0	41.0	1.00	1.00	1.00
28	75.0	41.0	41.0	41.0	1.00	1.00	1.00
29	76.0	1.00	1.00	1.00	1.00	1.00	1.00
30	77.0	1.00	1.00	1.00	1.00	1.00	1.00
31	78.0	1.00	1.00	1.00	1.00	1.00	1.00
32	79.0	1.00	1.00	1.00	1.00	1.00	1.00
33	80.0	1.00	1.00	1.00	1.00	1.00	1.00
34	85.0	1.00	1.00	1.00	1.00	1.00	1.00
35	90.0	1.00	1.00	1.00	1.00	1.00	1.00
36	95.0	1.00	1.00	1.00	1.00	1.00	1.00
37	100.0	1.00	1.00	1.00	1.00	1.00	1.00
38	101.0	1.00	1.00	1.00	1.00	1.00	1.00
39	102.0	1.00	1.00	1.00	1.00	1.00	1.00
40	103.0	1.00	1.00	1.00	1.00	1.00	1.00
41	104.0	1.00	1.00	1.00	1.00	1.00	1.00
42	105.0	41.0	41.0	41.0	1.00	1.00	1.00
43	106.0	41.0	41.0	41.0	1.00	1.00	1.00
44	107.0	41.0	41.0	41.0	1.00	1.00	1.00
45	108.0	41.0	41.0	41.0	1.00	1.00	1.00
46	109.0	41.0	41.0	41.0	1.00	1.00	1.00
47	110.0	41.0	41.0	41.0	1.00	1.00	1.00
48	115.0	41.0	41.0	41.0	1.00	1.00	1.00
49	120.0	41.0	41.0	41.0	1.00	1.00	1.00
50	125.0	41.0	41.0	41.0	1.00	1.00	1.00
51	130.0	41.0	41.0	41.0	1.00	1.00	1.00
52	135.0	41.0	41.0	41.0	1.00	1.00	1.00
53	140.0	41.0	41.0	41.0	1.00	1.00	1.00
54	145.0	41.0	41.0	41.0	1.00	1.00	1.00
55	150.0	41.0	41.0	41.0	1.00	1.00	1.00
56	155.0	41.0	41.0	41.0	1.00	1.00	1.00
57	160.0	41.0	41.0	41.0	1.00	1.00	1.00
58	161.0	41.0	41.0	41.0	1.00	1.00	1.00
59	162.0	41.0	41.0	41.0	1.00	1.00	1.00

Figure 5-15 (Cont.)

60	163.0	41.0	41.0	41.0	1.00	1.00	1.00
61	164.0	41.0	41.0	41.0	1.00	1.00	1.00
62	165.0	41.0	41.0	41.0	1.00	1.00	1.00
63	166.0	1.00	1.00	1.00	1.00	1.00	1.00
64	167.0	1.00	1.00	1.00	1.00	1.00	1.00
65	168.0	1.00	1.00	1.00	1.00	1.00	1.00
66	169.0	1.00	1.00	1.00	1.00	1.00	1.00
67	170.0	1.00	1.00	1.00	1.00	1.00	1.00
68	175.0	1.00	1.00	1.00	1.00	1.00	1.00
69	180.0	1.00	1.00	1.00	1.00	1.00	1.00
70	185.0	1.00	1.00	1.00	1.00	1.00	1.00
71	190.0	1.00	1.00	1.00	1.00	1.00	1.00
72	191.0	1.00	1.00	1.00	1.00	1.00	1.00
73	192.0	1.00	1.00	1.00	1.00	1.00	1.00
74	193.0	1.00	1.00	1.00	1.00	1.00	1.00
75	194.0	1.00	1.00	1.00	1.00	1.00	1.00
76	195.0	41.0	41.0	41.0	1.00	1.00	1.00
77	196.0	41.0	41.0	41.0	1.00	1.00	1.00
78	197.0	41.0	41.0	41.0	1.00	1.00	1.00
79	198.0	41.0	41.0	41.0	1.00	1.00	1.00
80	199.0	41.0	41.0	41.0	1.00	1.00	1.00
81	200.0	41.0	41.0	41.0	1.00	1.00	1.00
82	205.0	41.0	41.0	41.0	1.00	1.00	1.00
83	210.0	41.0	41.0	41.0	1.00	1.00	1.00
84	215.0	41.0	41.0	41.0	1.00	1.00	1.00
85	220.0	41.0	41.0	41.0	1.00	1.00	1.00
86	225.0	41.0	41.0	41.0	1.00	1.00	1.00
87	230.0	41.0	41.0	41.0	1.00	1.00	1.00
88	235.0	41.0	41.0	41.0	1.00	1.00	1.00
89	240.0	41.0	41.0	41.0	1.00	1.00	1.00
90	245.0	41.0	41.0	41.0	1.00	1.00	1.00
91	250.0	41.0	41.0	41.0	1.00	1.00	1.00
92	251.0	41.0	41.0	41.0	1.00	1.00	1.00
93	252.0	41.0	41.0	41.0	1.00	1.00	1.00
94	253.0	41.0	41.0	41.0	1.00	1.00	1.00
95	254.0	41.0	41.0	41.0	1.00	1.00	1.00
96	255.0	41.0	41.0	41.0	1.00	1.00	1.00
97	256.0	1.00	1.00	1.00	1.00	1.00	1.00
98	257.0	1.00	1.00	1.00	1.00	1.00	1.00
99	258.0	1.00	1.00	1.00	1.00	1.00	1.00
100	259.0	1.00	1.00	1.00	1.00	1.00	1.00
101	260.0	1.00	1.00	1.00	1.00	1.00	1.00
102	265.0	1.00	1.00	1.00	1.00	1.00	1.00
103	270.0	1.00	1.00	1.00	1.00	1.00	1.00
104	275.0	1.00	1.00	1.00	1.00	1.00	1.00
105	280.0	1.00	1.00	1.00	1.00	1.00	1.00
106	281.0	1.00	1.00	1.00	1.00	1.00	1.00
107	282.0	1.00	1.00	1.00	1.00	1.00	1.00
108	283.0	1.00	1.00	1.00	1.00	1.00	1.00
109	284.0	1.00	1.00	1.00	1.00	1.00	1.00
110	285.0	41.0	41.0	41.0	1.00	1.00	1.00
111	286.0	41.0	41.0	41.0	1.00	1.00	1.00
112	287.0	41.0	41.0	41.0	1.00	1.00	1.00
113	288.0	41.0	41.0	41.0	1.00	1.00	1.00
114	289.0	41.0	41.0	41.0	1.00	1.00	1.00
115	290.0	41.0	41.0	41.0	1.00	1.00	1.00
116	295.0	41.0	41.0	41.0	1.00	1.00	1.00
117	300.0	41.0	41.0	41.0	1.00	1.00	1.00
118	305.0	41.0	41.0	41.0	1.00	1.00	1.00
119	310.0	41.0	41.0	41.0	1.00	1.00	1.00
120	315.0	41.0	41.0	41.0	1.00	1.00	1.00
121	320.0	41.0	41.0	41.0	1.00	1.00	1.00
122	325.0	41.0	41.0	41.0	1.00	1.00	1.00
123	330.0	41.0	41.0	41.0	1.00	1.00	1.00
124	335.0	41.0	41.0	41.0	1.00	1.00	1.00
125	340.0	41.0	41.0	41.0	1.00	1.00	1.00

126	341.0	41.0	41.0	41.0	1.00	1.00	1.00
127	342.0	41.0	41.0	41.0	1.00	1.00	1.00
128	343.0	41.0	41.0	41.0	1.00	1.00	1.00
129	344.0	41.0	41.0	41.0	1.00	1.00	1.00
130	345.0	41.0	41.0	41.0	1.00	1.00	1.00
131	346.0	1.00	1.00	1.00	1.00	1.00	1.00
132	347.0	1.00	1.00	1.00	1.00	1.00	1.00
133	348.0	1.00	1.00	1.00	1.00	1.00	1.00
134	349.0	1.00	1.00	1.00	1.00	1.00	1.00
135	350.0	1.00	1.00	1.00	1.00	1.00	1.00
136	355.0	1.00	1.00	1.00	1.00	1.00	1.00
137	360.0	1.00	1.00	1.00	1.00	1.00	1.00

Figure 5-15 (Cont.)

NON-DIM CLEARANCE DISTRIBUTION(H/C) FOR PAD NUMBER 1

	I =	19	20	21	22	23	24
	AXIAL LENGTH IN.	3.400	3.500	3.600	3.700	3.800	3.900
J	DEG.						
1	0.0	1.00	1.00	1.00	1.00	1.00	1.00
2	5.0	1.00	1.00	1.00	1.00	1.00	1.00
3	10.0	1.00	1.00	1.00	1.00	1.00	1.00
4	11.0	1.00	1.00	1.00	1.00	1.00	1.00
5	12.0	1.00	1.00	1.00	1.00	1.00	1.00
6	13.0	1.00	1.00	1.00	1.00	1.00	1.00
7	14.0	1.00	1.00	1.00	1.00	1.00	1.00
8	15.0	1.00	1.00	1.00	1.00	1.00	1.00
9	16.0	1.00	1.00	1.00	1.00	1.00	1.00
10	17.0	1.00	1.00	1.00	1.00	1.00	1.00
11	18.0	1.00	1.00	1.00	1.00	1.00	1.00
12	19.0	1.00	1.00	1.00	1.00	1.00	1.00
13	20.0	1.00	1.00	1.00	1.00	1.00	1.00
14	25.0	1.00	1.00	1.00	1.00	1.00	1.00
15	30.0	1.00	1.00	1.00	1.00	1.00	1.00
16	35.0	1.00	1.00	1.00	1.00	1.00	1.00
17	40.0	1.00	1.00	1.00	1.00	1.00	1.00
18	45.0	1.00	1.00	1.00	1.00	1.00	1.00
19	50.0	1.00	1.00	1.00	1.00	1.00	1.00
20	55.0	1.00	1.00	1.00	1.00	1.00	1.00
21	60.0	1.00	1.00	1.00	1.00	1.00	1.00
22	65.0	1.00	1.00	1.00	1.00	1.00	1.00
23	70.0	1.00	1.00	1.00	1.00	1.00	1.00
24	71.0	1.00	1.00	1.00	1.00	1.00	1.00
25	72.0	1.00	1.00	1.00	1.00	1.00	1.00
26	73.0	1.00	1.00	1.00	1.00	1.00	1.00
27	74.0	1.00	1.00	1.00	1.00	1.00	1.00
28	75.0	1.00	1.00	1.00	1.00	1.00	1.00
29	76.0	1.00	1.00	1.00	1.00	1.00	1.00
30	77.0	1.00	1.00	1.00	1.00	1.00	1.00
31	78.0	1.00	1.00	1.00	1.00	1.00	1.00
32	79.0	1.00	1.00	1.00	1.00	1.00	1.00
33	80.0	1.00	1.00	1.00	1.00	1.00	1.00
34	85.0	1.00	1.00	1.00	1.00	1.00	1.00
35	90.0	1.00	1.00	1.00	1.00	1.00	1.00
36	95.0	1.00	1.00	1.00	1.00	1.00	1.00
37	100.0	1.00	1.00	1.00	1.00	1.00	1.00
38	101.0	1.00	1.00	1.00	1.00	1.00	1.00
39	102.0	1.00	1.00	1.00	1.00	1.00	1.00
40	103.0	1.00	1.00	1.00	1.00	1.00	1.00
41	104.0	1.00	1.00	1.00	1.00	1.00	1.00
42	105.0	1.00	1.00	1.00	1.00	1.00	1.00
43	106.0	1.00	1.00	1.00	1.00	1.00	1.00
44	107.0	1.00	1.00	1.00	1.00	1.00	1.00
45	108.0	1.00	1.00	1.00	1.00	1.00	1.00
46	109.0	1.00	1.00	1.00	1.00	1.00	1.00
47	110.0	1.00	1.00	1.00	1.00	1.00	1.00
48	115.0	1.00	1.00	1.00	1.00	1.00	1.00
49	120.0	1.00	1.00	1.00	1.00	1.00	1.00
50	125.0	1.00	1.00	1.00	1.00	1.00	1.00
51	130.0	1.00	1.00	1.00	1.00	1.00	1.00
52	135.0	1.00	1.00	1.00	1.00	1.00	1.00
53	140.0	1.00	1.00	1.00	1.00	1.00	1.00
54	145.0	1.00	1.00	1.00	1.00	1.00	1.00
55	150.0	1.00	1.00	1.00	1.00	1.00	1.00
56	155.0	1.00	1.00	1.00	1.00	1.00	1.00
57	160.0	1.00	1.00	1.00	1.00	1.00	1.00
58	161.0	1.00	1.00	1.00	1.00	1.00	1.00
59	162.0	1.00	1.00	1.00	1.00	1.00	1.00

60	163.0	1.00	1.00	1.00	1.00	1.00	1.00
61	164.0	1.00	1.00	1.00	1.00	1.00	1.00
62	165.0	1.00	1.00	1.00	1.00	1.00	1.00
63	166.0	1.00	1.00	1.00	1.00	1.00	1.00
64	167.0	1.00	1.00	1.00	1.00	1.00	1.00
65	168.0	1.00	1.00	1.00	1.00	1.00	1.00
66	169.0	1.00	1.00	1.00	1.00	1.00	1.00
67	170.0	1.00	1.00	1.00	1.00	1.00	1.00
68	175.0	1.00	1.00	1.00	1.00	1.00	1.00
69	180.0	1.00	1.00	1.00	1.00	1.00	1.00
70	185.0	1.00	1.00	1.00	1.00	1.00	1.00
71	190.0	1.00	1.00	1.00	1.00	1.00	1.00
72	191.0	1.00	1.00	1.00	1.00	1.00	1.00
73	192.0	1.00	1.00	1.00	1.00	1.00	1.00
74	193.0	1.00	1.00	1.00	1.00	1.00	1.00
75	194.0	1.00	1.00	1.00	1.00	1.00	1.00
76	195.0	1.00	1.00	1.00	1.00	1.00	1.00
77	196.0	1.00	1.00	1.00	1.00	1.00	1.00
78	197.0	1.00	1.00	1.00	1.00	1.00	1.00
79	198.0	1.00	1.00	1.00	1.00	1.00	1.00
80	199.0	1.00	1.00	1.00	1.00	1.00	1.00
81	200.0	1.00	1.00	1.00	1.00	1.00	1.00
82	205.0	1.00	1.00	1.00	1.00	1.00	1.00
83	210.0	1.00	1.00	1.00	1.00	1.00	1.00
84	215.0	1.00	1.00	1.00	1.00	1.00	1.00
85	220.0	1.00	1.00	1.00	1.00	1.00	1.00
86	225.0	1.00	1.00	1.00	1.00	1.00	1.00
87	230.0	1.00	1.00	1.00	1.00	1.00	1.00
88	235.0	1.00	1.00	1.00	1.00	1.00	1.00
89	240.0	1.00	1.00	1.00	1.00	1.00	1.00
90	245.0	1.00	1.00	1.00	1.00	1.00	1.00
91	250.0	1.00	1.00	1.00	1.00	1.00	1.00
92	251.0	1.00	1.00	1.00	1.00	1.00	1.00
93	252.0	1.00	1.00	1.00	1.00	1.00	1.00
94	253.0	1.00	1.00	1.00	1.00	1.00	1.00
95	254.0	1.00	1.00	1.00	1.00	1.00	1.00
96	255.0	1.00	1.00	1.00	1.00	1.00	1.00
97	256.0	1.00	1.00	1.00	1.00	1.00	1.00
98	257.0	1.00	1.00	1.00	1.00	1.00	1.00
99	258.0	1.00	1.00	1.00	1.00	1.00	1.00
100	259.0	1.00	1.00	1.00	1.00	1.00	1.00
101	260.0	1.00	1.00	1.00	1.00	1.00	1.00
102	265.0	1.00	1.00	1.00	1.00	1.00	1.00
103	270.0	1.00	1.00	1.00	1.00	1.00	1.00
104	275.0	1.00	1.00	1.00	1.00	1.00	1.00
105	280.0	1.00	1.00	1.00	1.00	1.00	1.00
106	281.0	1.00	1.00	1.00	1.00	1.00	1.00
107	282.0	1.00	1.00	1.00	1.00	1.00	1.00
108	283.0	1.00	1.00	1.00	1.00	1.00	1.00
109	284.0	1.00	1.00	1.00	1.00	1.00	1.00
110	285.0	1.00	1.00	1.00	1.00	1.00	1.00
111	286.0	1.00	1.00	1.00	1.00	1.00	1.00
112	287.0	1.00	1.00	1.00	1.00	1.00	1.00
113	288.0	1.00	1.00	1.00	1.00	1.00	1.00
114	289.0	1.00	1.00	1.00	1.00	1.00	1.00
115	290.0	1.00	1.00	1.00	1.00	1.00	1.00
116	295.0	1.00	1.00	1.00	1.00	1.00	1.00
117	300.0	1.00	1.00	1.00	1.00	1.00	1.00
118	305.0	1.00	1.00	1.00	1.00	1.00	1.00
119	310.0	1.00	1.00	1.00	1.00	1.00	1.00
120	315.0	1.00	1.00	1.00	1.00	1.00	1.00
121	320.0	1.00	1.00	1.00	1.00	1.00	1.00
122	325.0	1.00	1.00	1.00	1.00	1.00	1.00
123	330.0	1.00	1.00	1.00	1.00	1.00	1.00
124	335.0	1.00	1.00	1.00	1.00	1.00	1.00
125	340.0	1.00	1.00	1.00	1.00	1.00	1.00

Figure 5-15 (Cont.)

126	341.0	1.00	1.00	1.00	1.00	1.00	1.00
127	342.0	1.00	1.00	1.00	1.00	1.00	1.00
128	343.0	1.00	1.00	1.00	1.00	1.00	1.00
129	344.0	1.00	1.00	1.00	1.00	1.00	1.00
130	345.0	1.00	1.00	1.00	1.00	1.00	1.00
131	346.0	1.00	1.00	1.00	1.00	1.00	1.00
132	347.0	1.00	1.00	1.00	1.00	1.00	1.00
133	348.0	1.00	1.00	1.00	1.00	1.00	1.00
134	349.0	1.00	1.00	1.00	1.00	1.00	1.00
135	350.0	1.00	1.00	1.00	1.00	1.00	1.00
136	355.0	1.00	1.00	1.00	1.00	1.00	1.00
137	360.0	1.00	1.00	1.00	1.00	1.00	1.00

NON-DIM CLEARANCE DISTRIBUTION(H/C) FOR PAD NUMBER 1

I = 25
AXIAL LENGTH IN.
4.000

J	DEG.	
1	0.0	1.00
2	5.0	1.00
3	10.0	1.00
4	11.0	1.00
5	12.0	1.00
6	13.0	1.00
7	14.0	1.00
8	15.0	1.00
9	16.0	1.00
10	17.0	1.00
11	18.0	1.00
12	19.0	1.00
13	20.0	1.00
14	25.0	1.00
15	30.0	1.00
16	35.0	1.00
17	40.0	1.00
18	45.0	1.00
19	50.0	1.00
20	55.0	1.00
21	60.0	1.00
22	65.0	1.00
23	70.0	1.00
24	71.0	1.00
25	72.0	1.00
26	73.0	1.00
27	74.0	1.00
28	75.0	1.00
29	76.0	1.00
30	77.0	1.00
31	78.0	1.00
32	79.0	1.00
33	80.0	1.00
34	85.0	1.00
35	90.0	1.00
36	95.0	1.00
37	100.0	1.00
38	101.0	1.00
39	102.0	1.00
40	103.0	1.00
41	104.0	1.00
42	105.0	1.00
43	106.0	1.00
44	107.0	1.00
45	108.0	1.00
46	109.0	1.00
47	110.0	1.00
48	115.0	1.00
49	120.0	1.00
50	125.0	1.00
51	130.0	1.00
52	135.0	1.00
53	140.0	1.00
54	145.0	1.00
55	150.0	1.00
56	155.0	1.00
57	160.0	1.00
58	161.0	1.00
59	162.0	1.00
60	163.0	1.00

Figure 5-15 (Cont.)

06/01/1993 10:53 Filename: XAMPLE3A.OUT Page 21

61	164.0	1.00
62	165.0	1.00
63	166.0	1.00
64	167.0	1.00
65	168.0	1.00
66	169.0	1.00
67	170.0	1.00
68	175.0	1.00
69	180.0	1.00
70	185.0	1.00
71	190.0	1.00
72	191.0	1.00
73	192.0	1.00
74	193.0	1.00
75	194.0	1.00
76	195.0	1.00
77	196.0	1.00
78	197.0	1.00
79	198.0	1.00
80	199.0	1.00
81	200.0	1.00
82	205.0	1.00
83	210.0	1.00
84	215.0	1.00
85	220.0	1.00
86	225.0	1.00
87	230.0	1.00
88	235.0	1.00
89	240.0	1.00
90	245.0	1.00
91	250.0	1.00
92	251.0	1.00
93	252.0	1.00
94	253.0	1.00
95	254.0	1.00
96	255.0	1.00
97	256.0	1.00
98	257.0	1.00
99	258.0	1.00
100	259.0	1.00
101	260.0	1.00
102	265.0	1.00
103	270.0	1.00
104	275.0	1.00
105	280.0	1.00
106	281.0	1.00
107	282.0	1.00
108	283.0	1.00
109	284.0	1.00
110	285.0	1.00
111	286.0	1.00
112	287.0	1.00
113	288.0	1.00
114	289.0	1.00
115	290.0	1.00
116	295.0	1.00
117	300.0	1.00
118	305.0	1.00
119	310.0	1.00
120	315.0	1.00
121	320.0	1.00
122	325.0	1.00
123	330.0	1.00
124	335.0	1.00
125	340.0	1.00
126	341.0	1.00

06/01/1993 10:53 Filename: XAMPLE3A.OUT Page 22

127	342.0	1.00
128	343.0	1.00
129	344.0	1.00
130	345.0	1.00
131	346.0	1.00
132	347.0	1.00
133	348.0	1.00
134	349.0	1.00
135	350.0	1.00
136	355.0	1.00
137	360.0	1.00

MIN. CLEAR.= 1.0000 AT 360.00 DEGREES

MAX. CLEAR.= 41.000 AT 345.00 DEGREES

Figure 5-15 (Cont.)

PRESSURE DISTRIBUTION (PSI) FOR PAD NUMBER 1

	I =	1	2	3	4	5	6
	AXIAL LENGTH IN.	2.000	2.100	2.200	2.300	2.400	2.450
J	DEG.						
1	0.0	0.000E+00	57.7	84.9	104.	120.	126.
2	5.0	0.000E+00	59.0	86.8	107.	122.	128.
3	10.0	0.000E+00	62.8	92.4	114.	130.	137.
4	11.0	0.000E+00	63.7	93.8	116.	133.	140.
5	12.0	0.000E+00	64.7	95.2	118.	136.	143.
6	13.0	0.000E+00	65.6	96.7	120.	139.	147.
7	14.0	0.000E+00	66.5	98.1	122.	142.	152.
8	15.0	0.000E+00	67.4	99.5	124.	145.	156.
9	16.0	0.000E+00	68.2	101.	126.	147.	158.
10	17.0	0.000E+00	68.9	102.	127.	149.	159.
11	18.0	0.000E+00	69.6	103.	128.	150.	160.
12	19.0	0.000E+00	70.1	103.	129.	150.	160.
13	20.0	0.000E+00	70.6	104.	129.	151.	160.
14	25.0	0.000E+00	71.8	105.	131.	152.	161.
15	30.0	0.000E+00	72.2	106.	131.	152.	161.
16	35.0	0.000E+00	72.4	106.	131.	152.	161.
17	40.0	0.000E+00	72.4	106.	131.	152.	161.
18	45.0	0.000E+00	72.4	106.	131.	152.	161.
19	50.0	0.000E+00	72.4	106.	131.	152.	161.
20	55.0	0.000E+00	72.4	106.	131.	152.	161.
21	60.0	0.000E+00	72.2	106.	131.	152.	161.
22	65.0	0.000E+00	71.8	105.	131.	152.	161.
23	70.0	0.000E+00	70.6	104.	129.	151.	160.
24	71.0	0.000E+00	70.1	103.	129.	150.	160.
25	72.0	0.000E+00	69.6	103.	128.	150.	160.
26	73.0	0.000E+00	68.9	102.	127.	149.	159.
27	74.0	0.000E+00	68.2	101.	126.	147.	158.
28	75.0	0.000E+00	67.4	99.5	124.	145.	156.
29	76.0	0.000E+00	66.5	98.1	122.	142.	152.
30	77.0	0.000E+00	65.6	96.7	120.	139.	147.
31	78.0	0.000E+00	64.7	95.2	118.	136.	143.
32	79.0	0.000E+00	63.7	93.8	116.	133.	140.
33	80.0	0.000E+00	62.8	92.4	114.	130.	137.
34	85.0	0.000E+00	59.0	86.8	107.	122.	128.
35	90.0	0.000E+00	57.7	84.9	104.	120.	126.
36	95.0	0.000E+00	59.0	86.8	107.	122.	128.
37	100.0	0.000E+00	62.8	92.4	114.	130.	137.
38	101.0	0.000E+00	63.7	93.8	116.	133.	140.
39	102.0	0.000E+00	64.7	95.2	118.	136.	143.
40	103.0	0.000E+00	65.6	96.7	120.	139.	147.
41	104.0	0.000E+00	66.5	98.1	122.	142.	152.
42	105.0	0.000E+00	67.4	99.5	124.	145.	156.
43	106.0	0.000E+00	68.2	101.	126.	147.	158.
44	107.0	0.000E+00	68.9	102.	127.	149.	159.
45	108.0	0.000E+00	69.6	103.	128.	150.	160.
46	109.0	0.000E+00	70.1	103.	129.	150.	160.
47	110.0	0.000E+00	70.6	104.	129.	151.	160.
48	115.0	0.000E+00	71.8	105.	131.	152.	161.
49	120.0	0.000E+00	72.2	106.	131.	152.	161.
50	125.0	0.000E+00	72.4	106.	131.	152.	161.
51	130.0	0.000E+00	72.4	106.	131.	152.	161.
52	135.0	0.000E+00	72.4	106.	131.	152.	161.
53	140.0	0.000E+00	72.4	106.	131.	152.	161.
54	145.0	0.000E+00	72.4	106.	131.	152.	161.
55	150.0	0.000E+00	72.2	106.	131.	152.	161.
56	155.0	0.000E+00	71.8	105.	131.	152.	161.
57	160.0	0.000E+00	70.6	104.	129.	151.	160.
58	161.0	0.000E+00	70.1	103.	129.	150.	160.
59	162.0	0.000E+00	69.6	103.	128.	150.	160.

60	163.0	0.000E+00	68.9	102.	127.	149.	159.
61	164.0	0.000E+00	68.2	101.	126.	147.	158.
62	165.0	0.000E+00	67.4	99.5	124.	145.	156.
63	166.0	0.000E+00	66.5	98.1	122.	142.	152.
64	167.0	0.000E+00	65.6	96.7	120.	139.	147.
65	168.0	0.000E+00	64.7	95.2	118.	136.	143.
66	169.0	0.000E+00	63.7	93.8	116.	133.	140.
67	170.0	0.000E+00	62.8	92.4	114.	130.	137.
68	175.0	0.000E+00	59.0	86.8	107.	122.	128.
69	180.0	0.000E+00	57.7	84.9	104.	120.	126.
70	185.0	0.000E+00	59.0	86.8	107.	122.	128.
71	190.0	0.000E+00	62.8	92.4	114.	130.	137.
72	191.0	0.000E+00	63.7	93.8	116.	133.	140.
73	192.0	0.000E+00	64.7	95.2	118.	136.	143.
74	193.0	0.000E+00	65.6	96.7	120.	139.	147.
75	194.0	0.000E+00	66.5	98.1	122.	142.	152.
76	195.0	0.000E+00	67.4	99.5	124.	145.	156.
77	196.0	0.000E+00	68.2	101.	126.	147.	158.
78	197.0	0.000E+00	68.9	102.	127.	149.	159.
79	198.0	0.000E+00	69.6	103.	128.	150.	160.
80	199.0	0.000E+00	70.1	103.	129.	150.	160.
81	200.0	0.000E+00	70.6	104.	129.	151.	160.
82	205.0	0.000E+00	71.8	105.	131.	152.	161.
83	210.0	0.000E+00	72.2	106.	131.	152.	161.
84	215.0	0.000E+00	72.4	106.	131.	152.	161.
85	220.0	0.000E+00	72.4	106.	131.	152.	161.
86	225.0	0.000E+00	72.4	106.	131.	152.	161.
87	230.0	0.000E+00	72.4	106.	131.	152.	161.
88	235.0	0.000E+00	72.4	106.	131.	152.	161.
89	240.0	0.000E+00	72.2	106.	131.	152.	161.
90	245.0	0.000E+00	71.8	105.	131.	152.	161.
91	250.0	0.000E+00	70.6	104.	129.	151.	160.
92	251.0	0.000E+00	70.1	103.	129.	150.	160.
93	252.0	0.000E+00	69.6	103.	128.	150.	160.
94	253.0	0.000E+00	68.9	102.	127.	149.	159.
95	254.0	0.000E+00	68.2	101.	126.	147.	158.
96	255.0	0.000E+00	67.4	99.5	124.	145.	156.
97	256.0	0.000E+00	66.5	98.1	122.	142.	152.
98	257.0	0.000E+00	65.6	96.7	120.	139.	147.
99	258.0	0.000E+00	64.7	95.2	118.	136.	143.
100	259.0	0.000E+00	63.7	93.8	116.	133.	140.
101	260.0	0.000E+00	62.8	92.4	114.	130.	137.
102	265.0	0.000E+00	59.0	86.8	107.	122.	128.
103	270.0	0.000E+00	57.7	84.9	104.	120.	126.
104	275.0	0.000E+00	59.0	86.8	107.	122.	128.
105	280.0	0.000E+00	62.8	92.4	114.	130.	137.
106	281.0	0.000E+00	63.7	93.8	116.	133.	140.
107	282.0	0.000E+00	64.7	95.2	118.	136.	143.
108	283.0	0.000E+00	65.6	96.7	120.	139.	147.
109	284.0	0.000E+00	66.5	98.1	122.	142.	152.
110	285.0	0.000E+00	67.4	99.5	124.	145.	156.
111	286.0	0.000E+00	68.2	101.	126.	147.	158.
112	287.0	0.000E+00	68.9	102.	127.	149.	159.
113	288.0	0.000E+00	69.6	103.	128.	150.	160.
114	289.0	0.000E+00	70.1	103.	129.	150.	160.
115	290.0	0.000E+00	70.6	104.	129.	151.	160.
116	295.0	0.000E+00	71.8	105.	131.	152.	161.
117	300.0	0.000E+00	72.2	106.	131.	152.	161.
118	305.0	0.000E+00	72.4	106.	131.	152.	161.
119	310.0	0.000E+00	72.4	106.	131.	152.	161.
120	315.0	0.000E+00	72.4	106.	131.	152.	161.
121	320.0	0.000E+00	72.4	106.	131.	152.	161.
122	325.0	0.000E+00	72.4	106.	131.	152.	161.
123	330.0	0.000E+00	72.2	106.	131.	152.	161.
124	335.0	0.000E+00	71.8	105.	131.	152.	161.
125	340.0	0.000E+00	70.6	104.	129.	151.	160.

Figure 5-15 (Cont.)

126	341.0	0.000E+00	70.1	103.	129.	150.	160.
127	342.0	0.000E+00	69.6	103.	128.	150.	160.
128	343.0	0.000E+00	68.9	102.	127.	149.	159.
129	344.0	0.000E+00	68.2	101.	126.	147.	158.
130	345.0	0.000E+00	67.4	99.5	124.	145.	156.
131	346.0	0.000E+00	66.5	98.1	122.	142.	152.
132	347.0	0.000E+00	65.6	96.7	120.	139.	147.
133	348.0	0.000E+00	64.7	95.2	118.	136.	143.
134	349.0	0.000E+00	63.7	93.8	116.	133.	140.
135	350.0	0.000E+00	62.8	92.4	114.	130.	137.
136	355.0	0.000E+00	59.0	86.8	107.	122.	128.
137	360.0	0.000E+00	57.7	84.9	104.	120.	126.

PRESSURE DISTRIBUTION (PSI) FOR PAD NUMBER 1

	I =	7	8	9	10	11	12
	AXIAL LENGTH IN.	2.500	2.550	2.600	2.700	2.800	2.900
J	DEG.						
1	0.0	132.	137.	141.	149.	156.	161.
2	5.0	134.	139.	144.	151.	157.	163.
3	10.0	143.	147.	151.	158.	162.	166.
4	11.0	146.	150.	154.	160.	163.	167.
5	12.0	149.	154.	157.	162.	165.	167.
6	13.0	154.	158.	161.	164.	166.	168.
7	14.0	160.	163.	165.	167.	168.	169.
8	15.0	170.	170.	170.	170.	170.	170.
9	16.0	170.	170.	170.	170.	170.	170.
10	17.0	170.	170.	170.	170.	170.	170.
11	18.0	170.	170.	170.	170.	170.	170.
12	19.0	170.	170.	170.	170.	170.	170.
13	20.0	170.	170.	170.	170.	170.	170.
14	25.0	170.	170.	170.	170.	170.	170.
15	30.0	170.	170.	170.	170.	170.	170.
16	35.0	170.	170.	170.	170.	170.	170.
17	40.0	170.	170.	170.	170.	170.	170.
18	45.0	170.	170.	170.	170.	170.	170.
19	50.0	170.	170.	170.	170.	170.	170.
20	55.0	170.	170.	170.	170.	170.	170.
21	60.0	170.	170.	170.	170.	170.	170.
22	65.0	170.	170.	170.	170.	170.	170.
23	70.0	170.	170.	170.	170.	170.	170.
24	71.0	170.	170.	170.	170.	170.	170.
25	72.0	170.	170.	170.	170.	170.	170.
26	73.0	170.	170.	170.	170.	170.	170.
27	74.0	170.	170.	170.	170.	170.	170.
28	75.0	170.	170.	170.	170.	170.	170.
29	76.0	160.	163.	165.	167.	168.	169.
30	77.0	154.	158.	161.	164.	166.	168.
31	78.0	149.	154.	157.	162.	165.	167.
32	79.0	146.	150.	154.	160.	163.	167.
33	80.0	143.	147.	151.	158.	162.	166.
34	85.0	134.	139.	144.	151.	157.	163.
35	90.0	132.	137.	141.	149.	156.	161.
36	95.0	134.	139.	144.	151.	157.	163.
37	100.0	143.	147.	151.	158.	162.	166.
38	101.0	146.	150.	154.	160.	163.	167.
39	102.0	149.	154.	157.	162.	165.	167.
40	103.0	154.	158.	161.	164.	166.	168.
41	104.0	160.	163.	165.	167.	168.	169.
42	105.0	170.	170.	170.	170.	170.	170.
43	106.0	170.	170.	170.	170.	170.	170.
44	107.0	170.	170.	170.	170.	170.	170.
45	108.0	170.	170.	170.	170.	170.	170.
46	109.0	170.	170.	170.	170.	170.	170.
47	110.0	170.	170.	170.	170.	170.	170.
48	115.0	170.	170.	170.	170.	170.	170.
49	120.0	170.	170.	170.	170.	170.	170.
50	125.0	170.	170.	170.	170.	170.	170.
51	130.0	170.	170.	170.	170.	170.	170.
52	135.0	170.	170.	170.	170.	170.	170.
53	140.0	170.	170.	170.	170.	170.	170.
54	145.0	170.	170.	170.	170.	170.	170.
55	150.0	170.	170.	170.	170.	170.	170.
56	155.0	170.	170.	170.	170.	170.	170.
57	160.0	170.	170.	170.	170.	170.	170.
58	161.0	170.	170.	170.	170.	170.	170.
59	162.0	170.	170.	170.	170.	170.	170.

Figure 5-15 (Cont.)

60	163.0	170.	170.	170.	170.	170.	170.
61	164.0	170.	170.	170.	170.	170.	170.
62	165.0	170.	170.	170.	170.	170.	170.
63	166.0	160.	163.	165.	167.	168.	169.
64	167.0	154.	158.	161.	164.	166.	168.
65	168.0	149.	154.	157.	162.	165.	167.
66	169.0	146.	150.	154.	160.	163.	167.
67	170.0	143.	147.	151.	158.	162.	166.
68	175.0	134.	139.	144.	151.	157.	163.
69	180.0	132.	137.	141.	149.	156.	161.
70	185.0	134.	139.	144.	151.	157.	163.
71	190.0	143.	147.	151.	158.	162.	166.
72	191.0	146.	150.	154.	160.	163.	167.
73	192.0	149.	154.	157.	162.	165.	167.
74	193.0	154.	158.	161.	164.	166.	168.
75	194.0	160.	163.	165.	167.	168.	169.
76	195.0	170.	170.	170.	170.	170.	170.
77	196.0	170.	170.	170.	170.	170.	170.
78	197.0	170.	170.	170.	170.	170.	170.
79	198.0	170.	170.	170.	170.	170.	170.
80	199.0	170.	170.	170.	170.	170.	170.
81	200.0	170.	170.	170.	170.	170.	170.
82	205.0	170.	170.	170.	170.	170.	170.
83	210.0	170.	170.	170.	170.	170.	170.
84	215.0	170.	170.	170.	170.	170.	170.
85	220.0	170.	170.	170.	170.	170.	170.
86	225.0	170.	170.	170.	170.	170.	170.
87	230.0	170.	170.	170.	170.	170.	170.
88	235.0	170.	170.	170.	170.	170.	170.
89	240.0	170.	170.	170.	170.	170.	170.
90	245.0	170.	170.	170.	170.	170.	170.
91	250.0	170.	170.	170.	170.	170.	170.
92	251.0	170.	170.	170.	170.	170.	170.
93	252.0	170.	170.	170.	170.	170.	170.
94	253.0	170.	170.	170.	170.	170.	170.
95	254.0	170.	170.	170.	170.	170.	170.
96	255.0	170.	170.	170.	170.	170.	170.
97	256.0	160.	163.	165.	167.	168.	169.
98	257.0	154.	158.	161.	164.	166.	168.
99	258.0	149.	154.	157.	162.	165.	167.
100	259.0	146.	150.	154.	160.	163.	167.
101	260.0	143.	147.	151.	158.	162.	166.
102	265.0	134.	139.	144.	151.	157.	163.
103	270.0	132.	137.	141.	149.	156.	161.
104	275.0	134.	139.	144.	151.	157.	163.
105	280.0	143.	147.	151.	158.	162.	166.
106	281.0	146.	150.	154.	160.	163.	167.
107	282.0	149.	154.	157.	162.	165.	167.
108	283.0	154.	158.	161.	164.	166.	168.
109	284.0	160.	163.	165.	167.	168.	169.
110	285.0	170.	170.	170.	170.	170.	170.
111	286.0	170.	170.	170.	170.	170.	170.
112	287.0	170.	170.	170.	170.	170.	170.
113	288.0	170.	170.	170.	170.	170.	170.
114	289.0	170.	170.	170.	170.	170.	170.
115	290.0	170.	170.	170.	170.	170.	170.
116	295.0	170.	170.	170.	170.	170.	170.
117	300.0	170.	170.	170.	170.	170.	170.
118	305.0	170.	170.	170.	170.	170.	170.
119	310.0	170.	170.	170.	170.	170.	170.
120	315.0	170.	170.	170.	170.	170.	170.
121	320.0	170.	170.	170.	170.	170.	170.
122	325.0	170.	170.	170.	170.	170.	170.
123	330.0	170.	170.	170.	170.	170.	170.
124	335.0	170.	170.	170.	170.	170.	170.
125	340.0	170.	170.	170.	170.	170.	170.

126	341.0	170.	170.	170.	170.	170.	170.
127	342.0	170.	170.	170.	170.	170.	170.
128	343.0	170.	170.	170.	170.	170.	170.
129	344.0	170.	170.	170.	170.	170.	170.
130	345.0	170.	170.	170.	170.	170.	170.
131	346.0	160.	163.	165.	167.	168.	169.
132	347.0	154.	158.	161.	164.	166.	168.
133	348.0	149.	154.	157.	162.	165.	167.
134	349.0	146.	150.	154.	160.	163.	167.
135	350.0	143.	147.	151.	158.	162.	166.
136	355.0	134.	139.	144.	151.	157.	163.
137	360.0	132.	137.	141.	149.	156.	161.

Figure 5-15 (Cont.)

PRESSURE DISTRIBUTION (PSI) FOR PAD NUMBER 1

	I =	13	14	15	16	17	18
	AXIAL LENGTH IN.	2.950	3.000	3.050	3.100	3.200	3.300
J	DEG.						
1	0.0	164.	166.	169.	171.	175.	179.
2	5.0	165.	167.	169.	171.	175.	179.
3	10.0	168.	169.	171.	173.	176.	179.
4	11.0	168.	170.	171.	173.	176.	179.
5	12.0	169.	170.	171.	173.	176.	179.
6	13.0	169.	170.	171.	173.	176.	179.
7	14.0	169.	170.	171.	172.	176.	179.
8	15.0	170.	170.	170.	172.	176.	179.
9	16.0	170.	170.	170.	172.	176.	179.
10	17.0	170.	170.	170.	172.	176.	179.
11	18.0	170.	170.	170.	172.	175.	179.
12	19.0	170.	170.	170.	172.	175.	179.
13	20.0	170.	170.	170.	172.	175.	179.
14	25.0	170.	170.	170.	172.	175.	179.
15	30.0	170.	170.	170.	171.	175.	179.
16	35.0	170.	170.	170.	171.	175.	179.
17	40.0	170.	170.	170.	171.	175.	179.
18	45.0	170.	170.	170.	171.	175.	179.
19	50.0	170.	170.	170.	171.	175.	179.
20	55.0	170.	170.	170.	171.	175.	179.
21	60.0	170.	170.	170.	171.	175.	179.
22	65.0	170.	170.	170.	172.	175.	179.
23	70.0	170.	170.	170.	172.	175.	179.
24	71.0	170.	170.	170.	172.	175.	179.
25	72.0	170.	170.	170.	172.	175.	179.
26	73.0	170.	170.	170.	172.	176.	179.
27	74.0	170.	170.	170.	172.	176.	179.
28	75.0	170.	170.	170.	172.	176.	179.
29	76.0	169.	170.	171.	172.	176.	179.
30	77.0	169.	170.	171.	173.	176.	179.
31	78.0	169.	170.	171.	173.	176.	179.
32	79.0	168.	170.	171.	173.	176.	179.
33	80.0	168.	169.	171.	173.	176.	179.
34	85.0	165.	167.	169.	171.	175.	179.
35	90.0	164.	166.	169.	171.	175.	179.
36	95.0	165.	167.	169.	171.	175.	179.
37	100.0	168.	169.	171.	173.	176.	179.
38	101.0	168.	170.	171.	173.	176.	179.
39	102.0	169.	170.	171.	173.	176.	179.
40	103.0	169.	170.	171.	173.	176.	179.
41	104.0	169.	170.	171.	172.	176.	179.
42	105.0	170.	170.	170.	172.	176.	179.
43	106.0	170.	170.	170.	172.	176.	179.
44	107.0	170.	170.	170.	172.	176.	179.
45	108.0	170.	170.	170.	172.	175.	179.
46	109.0	170.	170.	170.	172.	175.	179.
47	110.0	170.	170.	170.	172.	175.	179.
48	115.0	170.	170.	170.	172.	175.	179.
49	120.0	170.	170.	170.	171.	175.	179.
50	125.0	170.	170.	170.	171.	175.	179.
51	130.0	170.	170.	170.	171.	175.	179.
52	135.0	170.	170.	170.	171.	175.	179.
53	140.0	170.	170.	170.	171.	175.	179.
54	145.0	170.	170.	170.	171.	175.	179.
55	150.0	170.	170.	170.	171.	175.	179.
56	155.0	170.	170.	170.	172.	175.	179.
57	160.0	170.	170.	170.	172.	175.	179.
58	161.0	170.	170.	170.	172.	175.	179.
59	162.0	170.	170.	170.	172.	175.	179.

60	163.0	170.	170.	170.	172.	176.	179.
61	164.0	170.	170.	170.	172.	176.	179.
62	165.0	170.	170.	170.	172.	176.	179.
63	166.0	169.	170.	171.	172.	176.	179.
64	167.0	169.	170.	171.	173.	176.	179.
65	168.0	169.	170.	171.	173.	176.	179.
66	169.0	168.	170.	171.	173.	176.	179.
67	170.0	168.	169.	171.	173.	176.	179.
68	175.0	165.	167.	169.	171.	175.	179.
69	180.0	164.	166.	169.	171.	175.	179.
70	185.0	165.	167.	169.	171.	175.	179.
71	190.0	168.	169.	171.	173.	176.	179.
72	191.0	168.	170.	171.	173.	176.	179.
73	192.0	169.	170.	171.	173.	176.	179.
74	193.0	169.	170.	171.	173.	176.	179.
75	194.0	169.	170.	171.	172.	176.	179.
76	195.0	170.	170.	170.	172.	176.	179.
77	196.0	170.	170.	170.	172.	176.	179.
78	197.0	170.	170.	170.	172.	176.	179.
79	198.0	170.	170.	170.	172.	175.	179.
80	199.0	170.	170.	170.	172.	175.	179.
81	200.0	170.	170.	170.	172.	175.	179.
82	205.0	170.	170.	170.	172.	175.	179.
83	210.0	170.	170.	170.	171.	175.	179.
84	215.0	170.	170.	170.	171.	175.	179.
85	220.0	170.	170.	170.	171.	175.	179.
86	225.0	170.	170.	170.	171.	175.	179.
87	230.0	170.	170.	170.	171.	175.	179.
88	235.0	170.	170.	170.	171.	175.	179.
89	240.0	170.	170.	170.	171.	175.	179.
90	245.0	170.	170.	170.	172.	175.	179.
91	250.0	170.	170.	170.	172.	175.	179.
92	251.0	170.	170.	170.	172.	175.	179.
93	252.0	170.	170.	170.	172.	175.	179.
94	253.0	170.	170.	170.	172.	176.	179.
95	254.0	170.	170.	170.	172.	176.	179.
96	255.0	170.	170.	170.	172.	176.	179.
97	256.0	169.	170.	171.	172.	176.	179.
98	257.0	169.	170.	171.	173.	176.	179.
99	258.0	169.	170.	171.	173.	176.	179.
100	259.0	168.	170.	171.	173.	176.	179.
101	260.0	168.	169.	171.	173.	176.	179.
102	265.0	165.	167.	169.	171.	175.	179.
103	270.0	164.	166.	169.	171.	175.	179.
104	275.0	165.	167.	169.	171.	175.	179.
105	280.0	168.	169.	171.	173.	176.	179.
106	281.0	168.	170.	171.	173.	176.	179.
107	282.0	169.	170.	171.	173.	176.	179.
108	283.0	169.	170.	171.	173.	176.	179.
109	284.0	169.	170.	171.	172.	176.	179.
110	285.0	170.	170.	170.	172.	176.	179.
111	286.0	170.	170.	170.	172.	176.	179.
112	287.0	170.	170.	170.	172.	176.	179.
113	288.0	170.	170.	170.	172.	175.	179.
114	289.0	170.	170.	170.	172.	175.	179.
115	290.0	170.	170.	170.	172.	175.	179.
116	295.0	170.	170.	170.	172.	175.	179.
117	300.0	170.	170.	170.	171.	175.	179.
118	305.0	170.	170.	170.	171.	175.	179.
119	310.0	170.	170.	170.	171.	175.	179.
120	315.0	170.	170.	170.	171.	175.	179.
121	320.0	170.	170.	170.	171.	175.	179.
122	325.0	170.	170.	170.	171.	175.	179.
123	330.0	170.	170.	170.	171.	175.	179.
124	335.0	170.	170.	170.	172.	175.	179.
125	340.0	170.	170.	170.	172.	175.	179.

Figure 5-15 (Cont.)

126	341.0	170.	170.	170.	172.	175.	179.
127	342.0	170.	170.	170.	172.	175.	179.
128	343.0	170.	170.	170.	172.	176.	179.
129	344.0	170.	170.	170.	172.	176.	179.
130	345.0	170.	170.	170.	172.	176.	179.
131	346.0	169.	170.	171.	172.	176.	179.
132	347.0	169.	170.	171.	173.	176.	179.
133	348.0	169.	170.	171.	173.	176.	179.
134	349.0	168.	170.	171.	173.	176.	179.
135	350.0	168.	169.	171.	173.	176.	179.
136	355.0	165.	167.	169.	171.	175.	179.
137	360.0	164.	166.	169.	171.	175.	179.

PRESSURE DISTRIBUTION (PSI) FOR PAD NUMBER 1

	I =	19	20	21	22	23	24
	AXIAL LENGTH IN.	3.400	3.500	3.600	3.700	3.800	3.900
J	DEG.						
1	0.0	182.	186.	189.	192.	195.	197.
2	5.0	182.	186.	189.	192.	195.	197.
3	10.0	183.	186.	189.	192.	195.	197.
4	11.0	183.	186.	189.	192.	195.	197.
5	12.0	183.	186.	189.	192.	195.	197.
6	13.0	183.	186.	189.	192.	195.	197.
7	14.0	183.	186.	189.	192.	195.	197.
8	15.0	183.	186.	189.	192.	195.	197.
9	16.0	183.	186.	189.	192.	195.	197.
10	17.0	183.	186.	189.	192.	195.	197.
11	18.0	182.	186.	189.	192.	195.	197.
12	19.0	182.	186.	189.	192.	195.	197.
13	20.0	182.	186.	189.	192.	195.	197.
14	25.0	182.	186.	189.	192.	195.	197.
15	30.0	182.	186.	189.	192.	195.	197.
16	35.0	182.	186.	189.	192.	195.	197.
17	40.0	182.	186.	189.	192.	195.	197.
18	45.0	182.	186.	189.	192.	195.	197.
19	50.0	182.	186.	189.	192.	195.	197.
20	55.0	182.	186.	189.	192.	195.	197.
21	60.0	182.	186.	189.	192.	195.	197.
22	65.0	182.	186.	189.	192.	195.	197.
23	70.0	182.	186.	189.	192.	195.	197.
24	71.0	182.	186.	189.	192.	195.	197.
25	72.0	182.	186.	189.	192.	195.	197.
26	73.0	183.	186.	189.	192.	195.	197.
27	74.0	183.	186.	189.	192.	195.	197.
28	75.0	183.	186.	189.	192.	195.	197.
29	76.0	183.	186.	189.	192.	195.	197.
30	77.0	183.	186.	189.	192.	195.	197.
31	78.0	183.	186.	189.	192.	195.	197.
32	79.0	183.	186.	189.	192.	195.	197.
33	80.0	183.	186.	189.	192.	195.	197.
34	85.0	182.	186.	189.	192.	195.	197.
35	90.0	182.	186.	189.	192.	195.	197.
36	95.0	182.	186.	189.	192.	195.	197.
37	100.0	183.	186.	189.	192.	195.	197.
38	101.0	183.	186.	189.	192.	195.	197.
39	102.0	183.	186.	189.	192.	195.	197.
40	103.0	183.	186.	189.	192.	195.	197.
41	104.0	183.	186.	189.	192.	195.	197.
42	105.0	183.	186.	189.	192.	195.	197.
43	106.0	183.	186.	189.	192.	195.	197.
44	107.0	183.	186.	189.	192.	195.	197.
45	108.0	182.	186.	189.	192.	195.	197.
46	109.0	182.	186.	189.	192.	195.	197.
47	110.0	182.	186.	189.	192.	195.	197.
48	115.0	182.	186.	189.	192.	195.	197.
49	120.0	182.	186.	189.	192.	195.	197.
50	125.0	182.	186.	189.	192.	195.	197.
51	130.0	182.	186.	189.	192.	195.	197.
52	135.0	182.	186.	189.	192.	195.	197.
53	140.0	182.	186.	189.	192.	195.	197.
54	145.0	182.	186.	189.	192.	195.	197.
55	150.0	182.	186.	189.	192.	195.	197.
56	155.0	182.	186.	189.	192.	195.	197.
57	160.0	182.	186.	189.	192.	195.	197.
58	161.0	182.	186.	189.	192.	195.	197.
59	162.0	182.	186.	189.	192.	195.	197.

Figure 5-15 (Cont.)

60	163.0	183.	186.	189.	192.	195.	197.
61	164.0	183.	186.	189.	192.	195.	197.
62	165.0	183.	186.	189.	192.	195.	197.
63	166.0	183.	186.	189.	192.	195.	197.
64	167.0	183.	186.	189.	192.	195.	197.
65	168.0	183.	186.	189.	192.	195.	197.
66	169.0	183.	186.	189.	192.	195.	197.
67	170.0	183.	186.	189.	192.	195.	197.
68	175.0	182.	186.	189.	192.	195.	197.
69	180.0	182.	186.	189.	192.	195.	197.
70	185.0	182.	186.	189.	192.	195.	197.
71	190.0	183.	186.	189.	192.	195.	197.
72	191.0	183.	186.	189.	192.	195.	197.
73	192.0	183.	186.	189.	192.	195.	197.
74	193.0	183.	186.	189.	192.	195.	197.
75	194.0	183.	186.	189.	192.	195.	197.
76	195.0	183.	186.	189.	192.	195.	197.
77	196.0	183.	186.	189.	192.	195.	197.
78	197.0	183.	186.	189.	192.	195.	197.
79	198.0	182.	186.	189.	192.	195.	197.
80	199.0	182.	186.	189.	192.	195.	197.
81	200.0	182.	186.	189.	192.	195.	197.
82	205.0	182.	186.	189.	192.	195.	197.
83	210.0	182.	186.	189.	192.	195.	197.
84	215.0	182.	186.	189.	192.	195.	197.
85	220.0	182.	186.	189.	192.	195.	197.
86	225.0	182.	186.	189.	192.	195.	197.
87	230.0	182.	186.	189.	192.	195.	197.
88	235.0	182.	186.	189.	192.	195.	197.
89	240.0	182.	186.	189.	192.	195.	197.
90	245.0	182.	186.	189.	192.	195.	197.
91	250.0	182.	186.	189.	192.	195.	197.
92	251.0	182.	186.	189.	192.	195.	197.
93	252.0	182.	186.	189.	192.	195.	197.
94	253.0	183.	186.	189.	192.	195.	197.
95	254.0	183.	186.	189.	192.	195.	197.
96	255.0	183.	186.	189.	192.	195.	197.
97	256.0	183.	186.	189.	192.	195.	197.
98	257.0	183.	186.	189.	192.	195.	197.
99	258.0	183.	186.	189.	192.	195.	197.
100	259.0	183.	186.	189.	192.	195.	197.
101	260.0	183.	186.	189.	192.	195.	197.
102	265.0	182.	186.	189.	192.	195.	197.
103	270.0	182.	186.	189.	192.	195.	197.
104	275.0	182.	186.	189.	192.	195.	197.
105	280.0	183.	186.	189.	192.	195.	197.
106	281.0	183.	186.	189.	192.	195.	197.
107	282.0	183.	186.	189.	192.	195.	197.
108	283.0	183.	186.	189.	192.	195.	197.
109	284.0	183.	186.	189.	192.	195.	197.
110	285.0	183.	186.	189.	192.	195.	197.
111	286.0	183.	186.	189.	192.	195.	197.
112	287.0	183.	186.	189.	192.	195.	197.
113	288.0	182.	186.	189.	192.	195.	197.
114	289.0	182.	186.	189.	192.	195.	197.
115	290.0	182.	186.	189.	192.	195.	197.
116	295.0	182.	186.	189.	192.	195.	197.
117	300.0	182.	186.	189.	192.	195.	197.
118	305.0	182.	186.	189.	192.	195.	197.
119	310.0	182.	186.	189.	192.	195.	197.
120	315.0	182.	186.	189.	192.	195.	197.
121	320.0	182.	186.	189.	192.	195.	197.
122	325.0	182.	186.	189.	192.	195.	197.
123	330.0	182.	186.	189.	192.	195.	197.
124	335.0	182.	186.	189.	192.	195.	197.
125	340.0	182.	186.	189.	192.	195.	197.

126	341.0	182.	186.	189.	192.	195.	197.
127	342.0	182.	186.	189.	192.	195.	197.
128	343.0	183.	186.	189.	192.	195.	197.
129	344.0	183.	186.	189.	192.	195.	197.
130	345.0	183.	186.	189.	192.	195.	197.
131	346.0	183.	186.	189.	192.	195.	197.
132	347.0	183.	186.	189.	192.	195.	197.
133	348.0	183.	186.	189.	192.	195.	197.
134	349.0	183.	186.	189.	192.	195.	197.
135	350.0	183.	186.	189.	192.	195.	197.
136	355.0	182.	186.	189.	192.	195.	197.
137	360.0	182.	186.	189.	192.	195.	197.

Figure 5-15 (Cont.)

PRESSURE DISTRIBUTION (PSI) FOR PAD NUMBER 1

I = 25
AXIAL LENGTH IN.
4.000

J	DEG.	
1	0.0	200.
2	5.0	200.
3	10.0	200.
4	11.0	200.
5	12.0	200.
6	13.0	200.
7	14.0	200.
8	15.0	200.
9	16.0	200.
10	17.0	200.
11	18.0	200.
12	19.0	200.
13	20.0	200.
14	25.0	200.
15	30.0	200.
16	35.0	200.
17	40.0	200.
18	45.0	200.
19	50.0	200.
20	55.0	200.
21	60.0	200.
22	65.0	200.
23	70.0	200.
24	71.0	200.
25	72.0	200.
26	73.0	200.
27	74.0	200.
28	75.0	200.
29	76.0	200.
30	77.0	200.
31	78.0	200.
32	79.0	200.
33	80.0	200.
34	85.0	200.
35	90.0	200.
36	95.0	200.
37	100.0	200.
38	101.0	200.
39	102.0	200.
40	103.0	200.
41	104.0	200.
42	105.0	200.
43	106.0	200.
44	107.0	200.
45	108.0	200.
46	109.0	200.
47	110.0	200.
48	115.0	200.
49	120.0	200.
50	125.0	200.
51	130.0	200.
52	135.0	200.
53	140.0	200.
54	145.0	200.
55	150.0	200.
56	155.0	200.
57	160.0	200.
58	161.0	200.
59	162.0	200.
60	163.0	200.

61	164.0	200.
62	165.0	200.
63	166.0	200.
64	167.0	200.
65	168.0	200.
66	169.0	200.
67	170.0	200.
68	175.0	200.
69	180.0	200.
70	185.0	200.
71	190.0	200.
72	191.0	200.
73	192.0	200.
74	193.0	200.
75	194.0	200.
76	195.0	200.
77	196.0	200.
78	197.0	200.
79	198.0	200.
80	199.0	200.
81	200.0	200.
82	205.0	200.
83	210.0	200.
84	215.0	200.
85	220.0	200.
86	225.0	200.
87	230.0	200.
88	235.0	200.
89	240.0	200.
90	245.0	200.
91	250.0	200.
92	251.0	200.
93	252.0	200.
94	253.0	200.
95	254.0	200.
96	255.0	200.
97	256.0	200.
98	257.0	200.
99	258.0	200.
100	259.0	200.
101	260.0	200.
102	265.0	200.
103	270.0	200.
104	275.0	200.
105	280.0	200.
106	281.0	200.
107	282.0	200.
108	283.0	200.
109	284.0	200.
110	285.0	200.
111	286.0	200.
112	287.0	200.
113	288.0	200.
114	289.0	200.
115	290.0	200.
116	295.0	200.
117	300.0	200.
118	305.0	200.
119	310.0	200.
120	315.0	200.
121	320.0	200.
122	325.0	200.
123	330.0	200.
124	335.0	200.
125	340.0	200.
126	341.0	200.

Figure 5-15 (Cont.)

```
  127  342.0  200.
  128  343.0  200.
  129  344.0  200.
  130  345.0  200.
  131  346.0  200.
  132  347.0  200.
  133  348.0  200.
  134  349.0  200.
  135  350.0  200.
  136  355.0  200.
  137  360.0  200.

    MIN. PRESS=  0.00000E+00  AT   360.00      DEGREES

    MAX. PRESS=  200.00      AT   360.00      DEGREES

RECESS SEAL
  GFACE

  -JOURNAL POSITION & FORCES

    MINIMUM CLEARANCE      =    0.000500 IN
    LOAD CAPACITY          =   6265.     LB
    MOMENT ABOUT X-X       =  0.1421E-06 IN-LB
    MOMENT ABOUT Y-Y       = -0.1740E-06 IN-LB

    POWER LOSS             =  0.0000E+00 HP

    LEAKAGE AT INNER       = -0.8928E-03 LB/S
    LEAKAGE AT OUTER       = -0.2859E-03 LB/S

  -STIFFNESS COEFFICIENTS
    PRINCIPAL  Z       KZZ =  0.3003E+07 LB/IN
    CROSS-COUPLED      KZA =   79.56     LB/RAD
    CROSS-COUPLED      KZB =   79.73     LB/RAD
    CROSS-COUPLED      KAZ = -0.1382E-01 IN-LB/IN
    PRINCIPAL  A       KAA =  0.4779E+07 IN-LB/RAD
    CROSS-COUPLED      KAB =  -1.289     IN-LB/RAD
    CROSS-COUPLED      KBZ = -0.3776     IN-LB/IN
    CROSS-COUPLED      KBA = -0.7086     IN-LB/RAD
    PRINCIPAL  B       KBB =  0.4779E+07 IN-LB/RAD

  -DAMPING COEFFICIENTS
    PRINCIPAL  Z       DZZ = -0.1258E+05 LB-S/IN
    CROSS-COUPLED      DZA =  -4.177     LB-S/RAD
    CROSS-COUPLED      DZB =  -4.178     LB-S/RAD
    CROSS-COUPLED      DAZ =  0.7818E-04 IN-LB-S/IN
    PRINCIPAL  A       DAA = -0.1440E+05 IN-LB-S/RAD
    CROSS-COUPLED      DAB =  0.7198E-02 IN-LB-S/RAD
    CROSS-COUPLED      DBZ =  0.1054E-05 IN-LB-S/IN
    CROSS-COUPLED      DBA =  0.3959E-02 IN-LB-S/RAD
    PRINCIPAL  B       DBB = -0.1440E+05 IN-LB-S/RAD

RECESS SEAL
  GFACE

  ECHO OF INPUT

 NO MORE INPUT, PROGRAM TERMINATED
```

Figure 5-15 (Cont.)

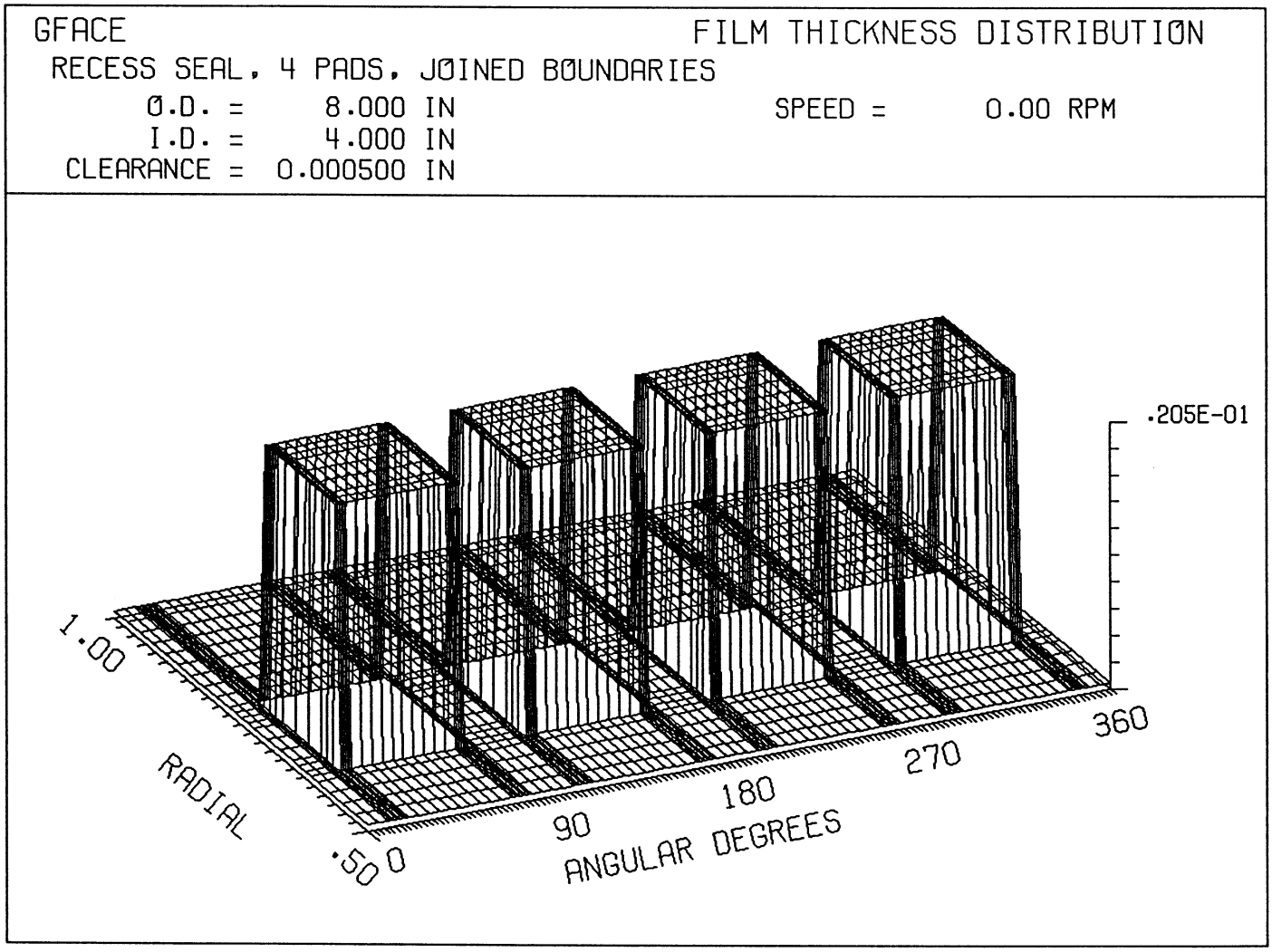

Figure 5-16 Sample Problem 4, Four Recess Seal, Clearance Distribution

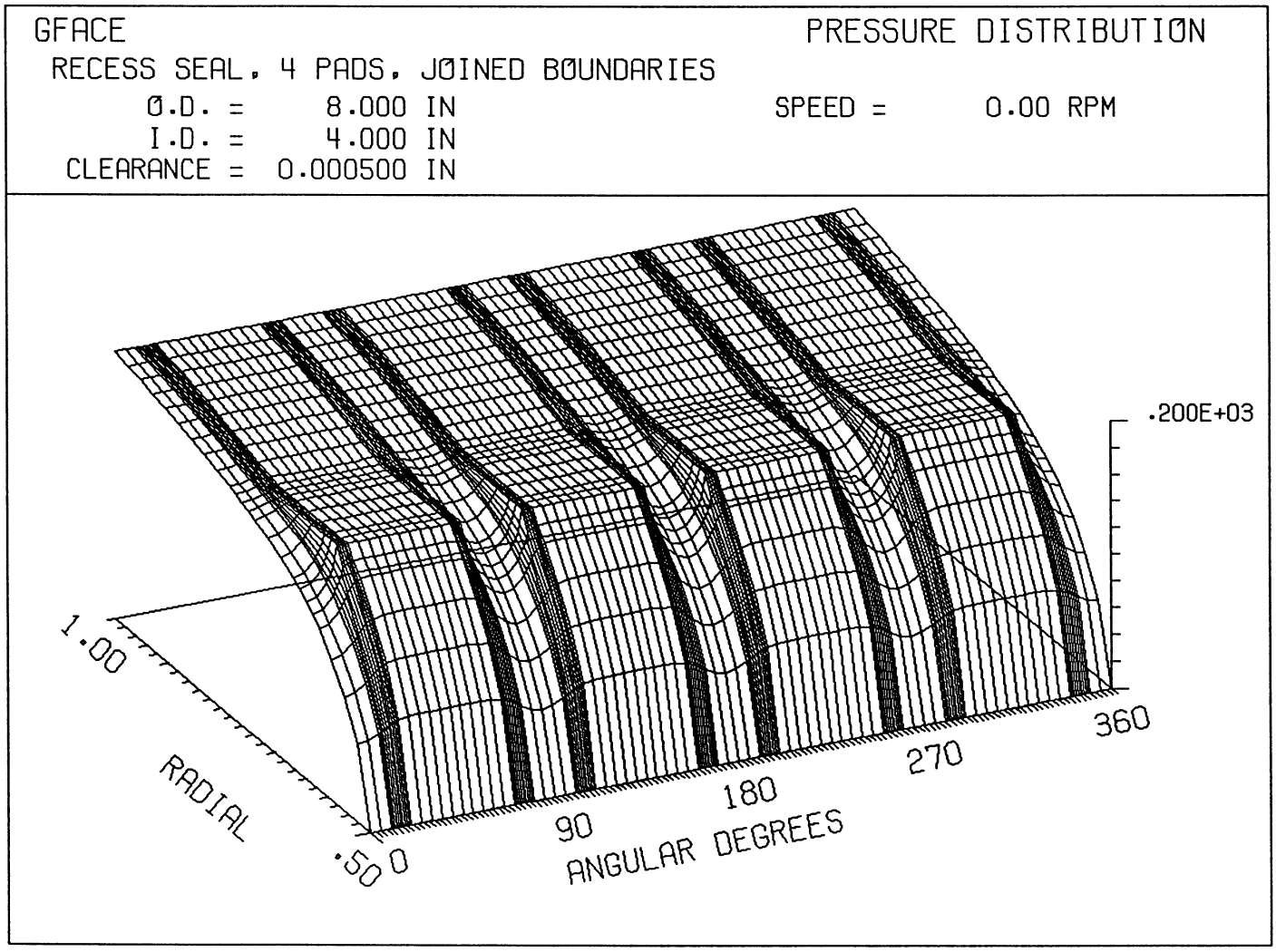

Figure 5-17 Sample Problem 4, Four Recess Seal, Pressure Distribution

5.5 Recess Seal Using Pad Option

By applying the NPAD and JOINED (periodic) options, only one quarter of the recess seal of sample problem 4 need be modeled. This saves significant inputting labor. However, Moment Stiffness and Damping are slightly inaccurate with this approach because an angular displacement destroys periodicity. The input for the multi-pad case is shown on Fig. 5-18, and the output file is indicated on Fig. 5-19. Examination of the stiffnesses for the full scale case (Sample Problem 4) Vs. this four pad case indicates stiffness values within 10%, making the pad option a viable alternative.

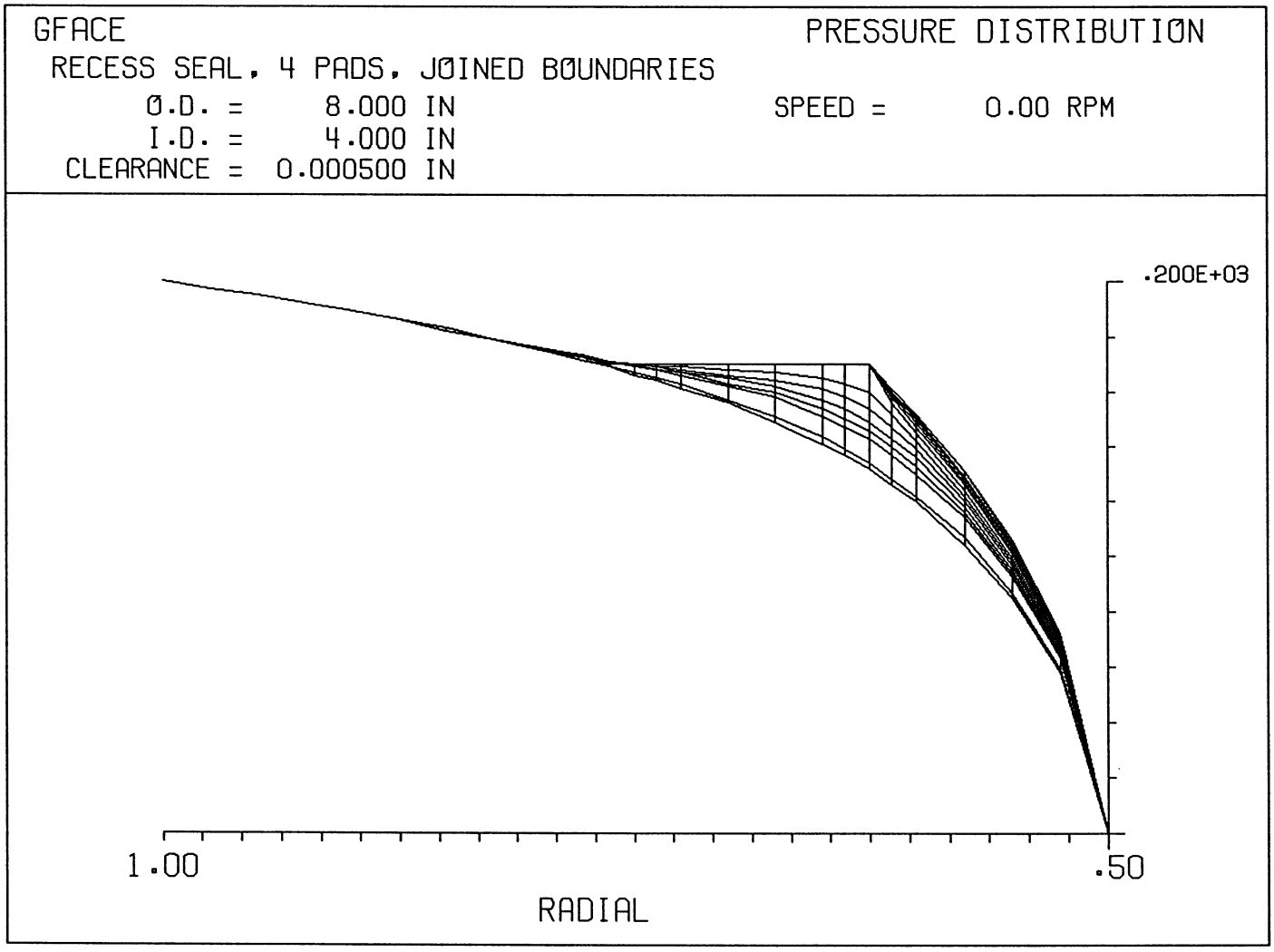

Figure 5-18 Sample Problem 4, Four Recess Seal, Pressure Distribution Along Radial Line

```
XAMPLE3B
RECESS SEAL, 4 PADS, JOINED BOUNDARIES
*
NPAD        4
JOINED
OPTION      1.
*
STIFFNESS   .0001
VGRIDM      25
2.0 2.1 2.2 2.3 2.4 2.45 2.5 2.55 2.6 2.7 2.8 2.9 2.95 3.0 3.05 3.1 3.2
3.3 3.4 3.5 3.6 3.7 3.8 3.9 4.0
VGRIDN      35.
0.0 5.0 10.0 11.0 12.0 13.0 14.0 15.0 16.0 17.0 18.0 19.0 20.0 25.0 30.0
35.0 40.0 45.0 50.0 55.0 60.0 65.0 70.0 71.0 72.0 73.0 74.0 75.0 76.0
77.0 78.0 79.0 80.0 85.0 90.0
*
CLEARANCE   0.0005
RECESS      1
            .0200 7 8 15 28
SPOTRE      1
   11 18
DO          .010
PS          200.
SPHEAT      1.4
GASCONST    2.469E5
ABSTEMP     1460.
VISCOSITY   0.535E-8
TOLERA      0.001
SPEED       0.0
PO          14.7
PLEFT       0.
PRITE       0.
PTOP        200.
PBOT        0.
END
```

Figure 5-19 Sample Problem 5, Recess Seal Using Pad Option, Input File

5.6 Inherently Compensated Hydrostatic Seal

A hydrostatic seal with a series of feed holes that enter directly into the film employs inherent compensation which implies that the restrictor area is the curtain area of a cylinder with diameter equal to the hole diameter and length equal to the film height at the hole location. The seal analyzed had an inside diameter of 2 in. and an outside diameter of 4 in. For this example, holes were specified at a radius of 2.4 in and every 10 degrees in the circumferential direction. The hole size was 0.010 in. diameter. In specifying the variable grid for inherent compensation, it is important to produce a fine grid in both directions at the hole locations and the grid size should be the same order of magnitude as the hole size. Notice the fine grid at the hole locations specified in the input on Fig. 5-20. If fine grids are not employed at the hole locations, then convergence problems will result. In addition to the grid specifications the location of the holes must be identified. The input variable SOURCE is applied in column 1 and the number of sources are inputted in columns 11-80. Following this input are the I,J locations of the holes, with one line of input for each hole. Refer to Fig. 5-21 for the input file. The output is shown on Fig. 5-22. Clearance and pressure distributions are graphically displayed on Figures 5-23 through 5-25.

```
06/02/1993  14:03        Filename: XAMPLE3B.OUT                    Page   1


RECESS SEAL, 4 PADS, JOINED BOUNDARIES
  GFACE

  ECHO OF INPUT

  *
  NPAD      =    4          NUMBER OF PADS
  JOINED BOUNDARY
  OPTION    =    1          GIVEN CLEARANCE FIND LOAD CAPACITY
  *
  ISTIF     =    1          STIFFNESS CALCULATION
  EXCITATION SPEED, RPM  =       0.0001
  GRIDM     =   25          GRID POINTS IN RADIAL DIRECTION
  VARIABLE GRID IN AXIAL DIRECTION
     2.000       2.100       2.200       2.300       2.400
     2.450       2.500       2.550       2.600       2.700
     2.800       2.900       2.950       3.000       3.050
     3.100       3.200       3.300       3.400       3.500
     3.600       3.700       3.800       3.900       4.000
  GRIDN     =   35          GRID POINTS IN CIRCUMFERENTIAL DIRECTION
  VARIABLE GRID IN CIRCUMFERENTIAL DIRECTION
    0.0000E+00   5.000       10.00       11.00       12.00
     13.00       14.00       15.00       16.00       17.00
     18.00       19.00       20.00       25.00       30.00
     35.00       40.00       45.00       50.00       55.00
     60.00       65.00       70.00       71.00       72.00
     73.00       74.00       75.00       76.00       77.00
     78.00       79.00       80.00       85.00       90.00
  *
  CLEARANCE =  0.000500     BEARING CLEARANCE
  RECESS
  RECESS HEIGHT =      0.02000          IL =     7     JL =     8     IR =    15
    JR =   28
  SPOT RECESSES
     11   18
  DO        =    0.0100     ORIFICE DIAMETER
  PS        =    200.00     SUPPLY PRESSURE(ORIFICE)
  SPECIFIC  =    1.4000     SPECIFIC HEAT RATIO
  GAS CONST =   246900.0    GAS CONSTANT
  ABS TEMP  =   1460.00     ABSOLUTE TEMPERATURE
  VISCOSITY =  0.5350E-08   ABSOLUTE VISCOSITY
  TOL1      =    0.0010     TOLERANCE(COMPRESSIBILITY)
  TOL2      =    0.0000     ITERATION(OPTION 2)
  SPEED     =      0.00     ROTATIONAL SPEED IN RPM
  PO        =     14.70     REFERENCE(AMBIENT)  PRESSURE
  PLEFT     =      0.00     GAGE PRESSURE AT LEFT BOUNDARY
  PRITE     =      0.00     GAGE PRESSURE AT RIGHT BOUNDARY
  PTOP      =    200.00     GAGE PRESSURE AT TOP BOUNDARY
  PBOT      =      0.00     GAGE PRESSURE AT BOTTOM BOUNDARY


RECESS SEAL, 4 PADS, JOINED BOUNDARIES
  GFACE

  GAS THRUST BEARING/SEAL


  -BEARING GEOMETRY
   NUMBER OF PADS =    4
   OUTER DIAMETER =     8.000 IN
   INNER DIAMETER =     4.000 IN
        CLEARANCE =  0.000500 IN
   STARTING ANGLE =      0.00 DEG
        PAD ANGLE =     90.00 DEG
```

```
06/02/1993  14:03        Filename: XAMPLE3B.OUT                    Page   2

  -LUBRICANT PROPERTIES
                 VISCOSITY =  0.5350000E-08 LB-S/IN**2
              GAS CONSTANT =   246900.0     IN**2/S**2-R
         ABS. TEMPERATURE =   1460.000     DEG R

  -ORIFICE RELATED PROPERTIES
   ORIFICE
                  DIAMETER =  0.1000000E-01 IN
            DISCHARGE COEF =  0.9000000
           SUPPLY PRESSURE =   200.0000     PSI

      SPECIFIC HEAT RATIO =   1.400000

  ***RECESS TYPE

  -BOUNDARY CONDITIONS
      REFERENCE P =   14.70000     PSI
            PLEFT =  0.0000000E+00 PSI
            PRITE =  0.0000000E+00 PSI
             PTOP =   200.0000     PSI
             PBOT =  0.0000000E+00 PSI
            SPEED =  0.0000000E+00 RPM

  -BEARING MODEL
                M =   25
                N =   35
           JOINED =    T

   DZ
   0.250E-01 0.250E-01 0.250E-01 0.250E-01 0.125E-01
   0.125E-01 0.125E-01 0.125E-01 0.250E-01 0.250E-01
   0.250E-01 0.125E-01 0.125E-01 0.125E-01 0.125E-01
   0.250E-01 0.250E-01 0.250E-01 0.250E-01 0.250E-01
   0.250E-01 0.250E-01 0.250E-01 0.250E-01 0.250E-01

   DTHETA
   0.873E-01 0.873E-01 0.175E-01 0.175E-01 0.175E-01
   0.175E-01 0.175E-01 0.175E-01 0.175E-01 0.175E-01
   0.175E-01 0.175E-01 0.873E-01 0.873E-01 0.873E-01
   0.873E-01 0.873E-01 0.873E-01 0.873E-01 0.873E-01
   0.873E-01 0.873E-01 0.175E-01 0.175E-01 0.175E-01
   0.175E-01 0.175E-01 0.175E-01 0.175E-01 0.175E-01
   0.175E-01 0.175E-01 0.873E-01 0.873E-01 0.873E-01


RECESS SEAL, 4 PADS, JOINED BOUNDARIES
  GFACE

  -MAXIMUM NUMBER OF ITERATIONS
     MXIT1 =   10       (FOR COMPRESSIBILITY)
     MXIT2 =    5       (FOR OPTION 2)

  -TOLERANCE
      TOL1 =   0.00100  (FOR COMPRESSIBILITY)
      TOL2 =   0.01000  (FOR OPTION 2)

  -OPTION  =    1       GIVEN CLEARANCE  FIND LOAD CAPACITY


RECESS SEAL, 4 PADS, JOINED BOUNDARIES
  GFACE


  SPECIFIED SOURCE
     1  F  F  F  F  F  F  F  F  F  F  F  F  F  F  F  F  F  F  F  F  F  F  F  F
```

Figure 5-20 Sample Problem 5, Recess Seal Using Pad Option, Output File

06/02/1993 14:03 Filename: XAMPLE3B.OUT Page 3

```
F
    2 F F F F F F F F F F F F F F F F F F F F F F F F
F
    3 F F F F F F F F F F F F F F F F F F F F F F F F
F
    4 F F F F F F F F F F F F F F F F F F F F F F F F
F
    5 F F F F F F F F F F F F F F F F F F F F F F F F
F
    6 F F F F F F F F F F F F F F F F F F F F F F F F
F
    7 F F F F F F F F F F F F F F F F F F F F F F F F
F
    8 F F F F F F F F F F F F F F F F F F F F F F F F
F
    9 F F F F F F F F F F F F F F F F F F F F F F F F
F
   10 F F F F F F F F F F F F F F F F F F F F F F F F
F
   11 F F F F F F F F F F F F F F F F F F F F F F F F
F
   12 F F F F F F F F F F F F F F F F F F F F F F F F
F
   13 F F F F F F F F F F F F F F F F F F F F F F F F
F
   14 F F F F F F F F F F F F F F F F F F F F F F F F
F
   15 F F F F F F F F F F F F F F F F F F F F F F F F
F
   16 F F F F F F F F F F F F F F F F F F F F F F F F
F
   17 F F F F F F F F F F F F F F F F F F F F F F F F
F
   18 F F F F F F F F F F T F F F F F F F F F F F F F
F
   19 F F F F F F F F F F F F F F F F F F F F F F F F
F
   20 F F F F F F F F F F F F F F F F F F F F F F F F
F
   21 F F F F F F F F F F F F F F F F F F F F F F F F
F
   22 F F F F F F F F F F F F F F F F F F F F F F F F
F
   23 F F F F F F F F F F F F F F F F F F F F F F F F
F
   24 F F F F F F F F F F F F F F F F F F F F F F F F
F
   25 F F F F F F F F F F F F F F F F F F F F F F F F
F
   26 F F F F F F F F F F F F F F F F F F F F F F F F
F
   27 F F F F F F F F F F F F F F F F F F F F F F F F
F
   28 F F F F F F F F F F F F F F F F F F F F F F F F
F
   29 F F F F F F F F F F F F F F F F F F F F F F F F
F
   30 F F F F F F F F F F F F F F F F F F F F F F F F
F
   31 F F F F F F F F F F F F F F F F F F F F F F F F
F
   32 F F F F F F F F F F F F F F F F F F F F F F F F
F
   33 F F F F F F F F F F F F F F F F F F F F F F F F
F
   34 F F F F F F F F F F F F F F F F F F F F F F F F
```

06/02/1993 14:03 Filename: XAMPLE3B.OUT Page 4

```
F
   35 F F F F F F F F F F F F F F F F F F F F F F F F
F
```

Figure 5-20 (Cont.)

06/02/1993 14:03 Filename: XAMPLE3B.OUT Page 5

NON-DIM CLEARANCE DISTRIBUTION(H/C) FOR PAD NUMBER 1

	I =	1	2	3	4	5	6
	AXIAL LENGTH IN.	2.000	2.100	2.200	2.300	2.400	2.450
J	DEG.						
1	0.0	1.00	1.00	1.00	1.00	1.00	1.00
2	5.0	1.00	1.00	1.00	1.00	1.00	1.00
3	10.0	1.00	1.00	1.00	1.00	1.00	1.00
4	11.0	1.00	1.00	1.00	1.00	1.00	1.00
5	12.0	1.00	1.00	1.00	1.00	1.00	1.00
6	13.0	1.00	1.00	1.00	1.00	1.00	1.00
7	14.0	1.00	1.00	1.00	1.00	1.00	1.00
8	15.0	1.00	1.00	1.00	1.00	1.00	1.00
9	16.0	1.00	1.00	1.00	1.00	1.00	1.00
10	17.0	1.00	1.00	1.00	1.00	1.00	1.00
11	18.0	1.00	1.00	1.00	1.00	1.00	1.00
12	19.0	1.00	1.00	1.00	1.00	1.00	1.00
13	20.0	1.00	1.00	1.00	1.00	1.00	1.00
14	25.0	1.00	1.00	1.00	1.00	1.00	1.00
15	30.0	1.00	1.00	1.00	1.00	1.00	1.00
16	35.0	1.00	1.00	1.00	1.00	1.00	1.00
17	40.0	1.00	1.00	1.00	1.00	1.00	1.00
18	45.0	1.00	1.00	1.00	1.00	1.00	1.00
19	50.0	1.00	1.00	1.00	1.00	1.00	1.00
20	55.0	1.00	1.00	1.00	1.00	1.00	1.00
21	60.0	1.00	1.00	1.00	1.00	1.00	1.00
22	65.0	1.00	1.00	1.00	1.00	1.00	1.00
23	70.0	1.00	1.00	1.00	1.00	1.00	1.00
24	71.0	1.00	1.00	1.00	1.00	1.00	1.00
25	72.0	1.00	1.00	1.00	1.00	1.00	1.00
26	73.0	1.00	1.00	1.00	1.00	1.00	1.00
27	74.0	1.00	1.00	1.00	1.00	1.00	1.00
28	75.0	1.00	1.00	1.00	1.00	1.00	1.00
29	76.0	1.00	1.00	1.00	1.00	1.00	1.00
30	77.0	1.00	1.00	1.00	1.00	1.00	1.00
31	78.0	1.00	1.00	1.00	1.00	1.00	1.00
32	79.0	1.00	1.00	1.00	1.00	1.00	1.00
33	80.0	1.00	1.00	1.00	1.00	1.00	1.00
34	85.0	1.00	1.00	1.00	1.00	1.00	1.00
35	90.0	1.00	1.00	1.00	1.00	1.00	1.00

06/02/1993 14:03 Filename: XAMPLE3B.OUT Page 6

NON-DIM CLEARANCE DISTRIBUTION(H/C) FOR PAD NUMBER 1

	I =	7	8	9	10	11	12
	AXIAL LENGTH IN.	2.500	2.550	2.600	2.700	2.800	2.900
J	DEG.						
1	0.0	1.00	1.00	1.00	1.00	1.00	1.00
2	5.0	1.00	1.00	1.00	1.00	1.00	1.00
3	10.0	1.00	1.00	1.00	1.00	1.00	1.00
4	11.0	1.00	1.00	1.00	1.00	1.00	1.00
5	12.0	1.00	1.00	1.00	1.00	1.00	1.00
6	13.0	1.00	1.00	1.00	1.00	1.00	1.00
7	14.0	1.00	1.00	1.00	1.00	1.00	1.00
8	15.0	41.0	41.0	41.0	41.0	41.0	41.0
9	16.0	41.0	41.0	41.0	41.0	41.0	41.0
10	17.0	41.0	41.0	41.0	41.0	41.0	41.0
11	18.0	41.0	41.0	41.0	41.0	41.0	41.0
12	19.0	41.0	41.0	41.0	41.0	41.0	41.0
13	20.0	41.0	41.0	41.0	41.0	41.0	41.0
14	25.0	41.0	41.0	41.0	41.0	41.0	41.0
15	30.0	41.0	41.0	41.0	41.0	41.0	41.0
16	35.0	41.0	41.0	41.0	41.0	41.0	41.0
17	40.0	41.0	41.0	41.0	41.0	41.0	41.0
18	45.0	41.0	41.0	41.0	41.0	41.0	41.0
19	50.0	41.0	41.0	41.0	41.0	41.0	41.0
20	55.0	41.0	41.0	41.0	41.0	41.0	41.0
21	60.0	41.0	41.0	41.0	41.0	41.0	41.0
22	65.0	41.0	41.0	41.0	41.0	41.0	41.0
23	70.0	41.0	41.0	41.0	41.0	41.0	41.0
24	71.0	41.0	41.0	41.0	41.0	41.0	41.0
25	72.0	41.0	41.0	41.0	41.0	41.0	41.0
26	73.0	41.0	41.0	41.0	41.0	41.0	41.0
27	74.0	41.0	41.0	41.0	41.0	41.0	41.0
28	75.0	41.0	41.0	41.0	41.0	41.0	41.0
29	76.0	1.00	1.00	1.00	1.00	1.00	1.00
30	77.0	1.00	1.00	1.00	1.00	1.00	1.00
31	78.0	1.00	1.00	1.00	1.00	1.00	1.00
32	79.0	1.00	1.00	1.00	1.00	1.00	1.00
33	80.0	1.00	1.00	1.00	1.00	1.00	1.00
34	85.0	1.00	1.00	1.00	1.00	1.00	1.00
35	90.0	1.00	1.00	1.00	1.00	1.00	1.00

Figure 5-20 (Cont.)

06/02/1993 14:03 Filename: XAMPLE3B.OUT Page 7

NON-DIM CLEARANCE DISTRIBUTION(H/C) FOR PAD NUMBER 1

	I =	13	14	15	16	17	18
	AXIAL LENGTH IN.	2.950	3.000	3.050	3.100	3.200	3.300
J	DEG.						
1	0.0	1.00	1.00	1.00	1.00	1.00	1.00
2	5.0	1.00	1.00	1.00	1.00	1.00	1.00
3	10.0	1.00	1.00	1.00	1.00	1.00	1.00
4	11.0	1.00	1.00	1.00	1.00	1.00	1.00
5	12.0	1.00	1.00	1.00	1.00	1.00	1.00
6	13.0	1.00	1.00	1.00	1.00	1.00	1.00
7	14.0	1.00	1.00	1.00	1.00	1.00	1.00
8	15.0	41.0	41.0	41.0	1.00	1.00	1.00
9	16.0	41.0	41.0	41.0	1.00	1.00	1.00
10	17.0	41.0	41.0	41.0	1.00	1.00	1.00
11	18.0	41.0	41.0	41.0	1.00	1.00	1.00
12	19.0	41.0	41.0	41.0	1.00	1.00	1.00
13	20.0	41.0	41.0	41.0	1.00	1.00	1.00
14	25.0	41.0	41.0	41.0	1.00	1.00	1.00
15	30.0	41.0	41.0	41.0	1.00	1.00	1.00
16	35.0	41.0	41.0	41.0	1.00	1.00	1.00
17	40.0	41.0	41.0	41.0	1.00	1.00	1.00
18	45.0	41.0	41.0	41.0	1.00	1.00	1.00
19	50.0	41.0	41.0	41.0	1.00	1.00	1.00
20	55.0	41.0	41.0	41.0	1.00	1.00	1.00
21	60.0	41.0	41.0	41.0	1.00	1.00	1.00
22	65.0	41.0	41.0	41.0	1.00	1.00	1.00
23	70.0	41.0	41.0	41.0	1.00	1.00	1.00
24	71.0	41.0	41.0	41.0	1.00	1.00	1.00
25	72.0	41.0	41.0	41.0	1.00	1.00	1.00
26	73.0	41.0	41.0	41.0	1.00	1.00	1.00
27	74.0	41.0	41.0	41.0	1.00	1.00	1.00
28	75.0	41.0	41.0	41.0	1.00	1.00	1.00
29	76.0	1.00	1.00	1.00	1.00	1.00	1.00
30	77.0	1.00	1.00	1.00	1.00	1.00	1.00
31	78.0	1.00	1.00	1.00	1.00	1.00	1.00
32	79.0	1.00	1.00	1.00	1.00	1.00	1.00
33	80.0	1.00	1.00	1.00	1.00	1.00	1.00
34	85.0	1.00	1.00	1.00	1.00	1.00	1.00
35	90.0	1.00	1.00	1.00	1.00	1.00	1.00

06/02/1993 14:03 Filename: XAMPLE3B.OUT Page 8

NON-DIM CLEARANCE DISTRIBUTION(H/C) FOR PAD NUMBER 1

	I =	19	20	21	22	23	24
	AXIAL LENGTH IN.	3.400	3.500	3.600	3.700	3.800	3.900
J	DEG.						
1	0.0	1.00	1.00	1.00	1.00	1.00	1.00
2	5.0	1.00	1.00	1.00	1.00	1.00	1.00
3	10.0	1.00	1.00	1.00	1.00	1.00	1.00
4	11.0	1.00	1.00	1.00	1.00	1.00	1.00
5	12.0	1.00	1.00	1.00	1.00	1.00	1.00
6	13.0	1.00	1.00	1.00	1.00	1.00	1.00
7	14.0	1.00	1.00	1.00	1.00	1.00	1.00
8	15.0	1.00	1.00	1.00	1.00	1.00	1.00
9	16.0	1.00	1.00	1.00	1.00	1.00	1.00
10	17.0	1.00	1.00	1.00	1.00	1.00	1.00
11	18.0	1.00	1.00	1.00	1.00	1.00	1.00
12	19.0	1.00	1.00	1.00	1.00	1.00	1.00
13	20.0	1.00	1.00	1.00	1.00	1.00	1.00
14	25.0	1.00	1.00	1.00	1.00	1.00	1.00
15	30.0	1.00	1.00	1.00	1.00	1.00	1.00
16	35.0	1.00	1.00	1.00	1.00	1.00	1.00
17	40.0	1.00	1.00	1.00	1.00	1.00	1.00
18	45.0	1.00	1.00	1.00	1.00	1.00	1.00
19	50.0	1.00	1.00	1.00	1.00	1.00	1.00
20	55.0	1.00	1.00	1.00	1.00	1.00	1.00
21	60.0	1.00	1.00	1.00	1.00	1.00	1.00
22	65.0	1.00	1.00	1.00	1.00	1.00	1.00
23	70.0	1.00	1.00	1.00	1.00	1.00	1.00
24	71.0	1.00	1.00	1.00	1.00	1.00	1.00
25	72.0	1.00	1.00	1.00	1.00	1.00	1.00
26	73.0	1.00	1.00	1.00	1.00	1.00	1.00
27	74.0	1.00	1.00	1.00	1.00	1.00	1.00
28	75.0	1.00	1.00	1.00	1.00	1.00	1.00
29	76.0	1.00	1.00	1.00	1.00	1.00	1.00
30	77.0	1.00	1.00	1.00	1.00	1.00	1.00
31	78.0	1.00	1.00	1.00	1.00	1.00	1.00
32	79.0	1.00	1.00	1.00	1.00	1.00	1.00
33	80.0	1.00	1.00	1.00	1.00	1.00	1.00
34	85.0	1.00	1.00	1.00	1.00	1.00	1.00
35	90.0	1.00	1.00	1.00	1.00	1.00	1.00

Figure 5-20 (Cont.)

06/02/1993 14:03 Filename: XAMPLE3B.OUT Page 9

NON-DIM CLEARANCE DISTRIBUTION(H/C) FOR PAD NUMBER 1

I = 25

AXIAL LENGTH IN.
4.000

J	DEG.	
1	0.0	1.00
2	5.0	1.00
3	10.0	1.00
4	11.0	1.00
5	12.0	1.00
6	13.0	1.00
7	14.0	1.00
8	15.0	1.00
9	16.0	1.00
10	17.0	1.00
11	18.0	1.00
12	19.0	1.00
13	20.0	1.00
14	25.0	1.00
15	30.0	1.00
16	35.0	1.00
17	40.0	1.00
18	45.0	1.00
19	50.0	1.00
20	55.0	1.00
21	60.0	1.00
22	65.0	1.00
23	70.0	1.00
24	71.0	1.00
25	72.0	1.00
26	73.0	1.00
27	74.0	1.00
28	75.0	1.00
29	76.0	1.00
30	77.0	1.00
31	78.0	1.00
32	79.0	1.00
33	80.0	1.00
34	85.0	1.00
35	90.0	1.00

MIN. CLEAR.= 1.0000 AT 90.000 DEGREES

MAX. CLEAR.= 41.000 AT 75.000 DEGREES

06/02/1993 14:03 Filename: XAMPLE3B.OUT Page 10

PRESSURE DISTRIBUTION (PSI) FOR PAD NUMBER 1

I =	1	2	3	4	5	6
AXIAL LENGTH IN.	2.000	2.100	2.200	2.300	2.400	2.450
J DEG.						
1 0.0	0.000E+00	57.7	84.9	104.	120.	126.
2 5.0	0.000E+00	59.0	86.8	107.	122.	128.
3 10.0	0.000E+00	62.8	92.4	114.	130.	137.
4 11.0	0.000E+00	63.7	93.8	116.	133.	140.
5 12.0	0.000E+00	64.7	95.2	118.	136.	143.
6 13.0	0.000E+00	65.6	96.7	120.	139.	147.
7 14.0	0.000E+00	66.5	98.1	122.	142.	152.
8 15.0	0.000E+00	67.4	99.5	124.	145.	156.
9 16.0	0.000E+00	68.2	101.	126.	147.	158.
10 17.0	0.000E+00	68.9	102.	127.	149.	159.
11 18.0	0.000E+00	69.6	103.	128.	150.	160.
12 19.0	0.000E+00	70.1	103.	129.	150.	160.
13 20.0	0.000E+00	70.6	104.	129.	151.	160.
14 25.0	0.000E+00	71.8	105.	131.	152.	161.
15 30.0	0.000E+00	72.2	106.	131.	152.	161.
16 35.0	0.000E+00	72.4	106.	131.	152.	161.
17 40.0	0.000E+00	72.4	106.	131.	152.	161.
18 45.0	0.000E+00	72.4	106.	131.	152.	161.
19 50.0	0.000E+00	72.4	106.	131.	152.	161.
20 55.0	0.000E+00	72.4	106.	131.	152.	161.
21 60.0	0.000E+00	72.2	106.	131.	152.	161.
22 65.0	0.000E+00	71.8	105.	131.	152.	161.
23 70.0	0.000E+00	70.6	104.	129.	151.	160.
24 71.0	0.000E+00	70.1	103.	129.	150.	160.
25 72.0	0.000E+00	69.6	103.	128.	150.	160.
26 73.0	0.000E+00	68.9	102.	127.	149.	159.
27 74.0	0.000E+00	68.2	101.	126.	147.	158.
28 75.0	0.000E+00	67.4	99.5	124.	145.	156.
29 76.0	0.000E+00	66.5	98.1	122.	142.	152.
30 77.0	0.000E+00	65.6	96.7	120.	139.	147.
31 78.0	0.000E+00	64.7	95.2	118.	136.	143.
32 79.0	0.000E+00	63.7	93.8	116.	133.	140.
33 80.0	0.000E+00	62.8	92.4	114.	130.	137.
34 85.0	0.000E+00	59.0	86.8	107.	122.	128.
35 90.0	0.000E+00	57.7	84.9	104.	120.	126.

Figure 5-20 (Cont.)

06/02/1993 14:03 Filename: XAMPLE3B.OUT Page 11

PRESSURE DISTRIBUTION (PSI) FOR PAD NUMBER 1

I =		7	8	9	10	11	12
AXIAL LENGTH IN.		2.500	2.550	2.600	2.700	2.800	2.900
J	DEG.						
1	0.0	132.	137.	141.	149.	156.	161.
2	5.0	134.	139.	144.	151.	157.	163.
3	10.0	143.	147.	151.	158.	162.	166.
4	11.0	146.	150.	154.	160.	163.	167.
5	12.0	149.	154.	157.	162.	165.	167.
6	13.0	154.	158.	161.	164.	166.	168.
7	14.0	160.	163.	165.	167.	168.	169.
8	15.0	170.	170.	170.	170.	170.	170.
9	16.0	170.	170.	170.	170.	170.	170.
10	17.0	170.	170.	170.	170.	170.	170.
11	18.0	170.	170.	170.	170.	170.	170.
12	19.0	170.	170.	170.	170.	170.	170.
13	20.0	170.	170.	170.	170.	170.	170.
14	25.0	170.	170.	170.	170.	170.	170.
15	30.0	170.	170.	170.	170.	170.	170.
16	35.0	170.	170.	170.	170.	170.	170.
17	40.0	170.	170.	170.	170.	170.	170.
18	45.0	170.	170.	170.	170.	170.	170.
19	50.0	170.	170.	170.	170.	170.	170.
20	55.0	170.	170.	170.	170.	170.	170.
21	60.0	170.	170.	170.	170.	170.	170.
22	65.0	170.	170.	170.	170.	170.	170.
23	70.0	170.	170.	170.	170.	170.	170.
24	71.0	170.	170.	170.	170.	170.	170.
25	72.0	170.	170.	170.	170.	170.	170.
26	73.0	170.	170.	170.	170.	170.	170.
27	74.0	170.	170.	170.	170.	170.	170.
28	75.0	170.	170.	170.	170.	170.	170.
29	76.0	160.	163.	165.	167.	168.	169.
30	77.0	154.	158.	161.	164.	166.	168.
31	78.0	149.	154.	157.	162.	165.	167.
32	79.0	146.	150.	154.	160.	163.	167.
33	80.0	143.	147.	151.	158.	162.	166.
34	85.0	134.	139.	144.	151.	157.	163.
35	90.0	132.	137.	141.	149.	156.	161.

06/02/1993 14:03 Filename: XAMPLE3B.OUT Page 12

PRESSURE DISTRIBUTION (PSI) FOR PAD NUMBER 1

I =		13	14	15	16	17	18
AXIAL LENGTH IN.		2.950	3.000	3.050	3.100	3.200	3.300
J	DEG.						
1	0.0	164.	166.	169.	171.	175.	179.
2	5.0	165.	167.	169.	171.	175.	179.
3	10.0	168.	169.	171.	173.	176.	179.
4	11.0	168.	170.	171.	173.	176.	179.
5	12.0	169.	170.	171.	173.	176.	179.
6	13.0	169.	170.	171.	173.	176.	179.
7	14.0	169.	170.	171.	172.	176.	179.
8	15.0	170.	170.	170.	172.	176.	179.
9	16.0	170.	170.	170.	172.	176.	179.
10	17.0	170.	170.	170.	172.	176.	179.
11	18.0	170.	170.	170.	172.	175.	179.
12	19.0	170.	170.	170.	172.	175.	179.
13	20.0	170.	170.	170.	172.	175.	179.
14	25.0	170.	170.	170.	172.	175.	179.
15	30.0	170.	170.	170.	171.	175.	179.
16	35.0	170.	170.	170.	171.	175.	179.
17	40.0	170.	170.	170.	171.	175.	179.
18	45.0	170.	170.	170.	171.	175.	179.
19	50.0	170.	170.	170.	171.	175.	179.
20	55.0	170.	170.	170.	171.	175.	179.
21	60.0	170.	170.	170.	171.	175.	179.
22	65.0	170.	170.	170.	172.	175.	179.
23	70.0	170.	170.	170.	172.	175.	179.
24	71.0	170.	170.	170.	172.	175.	179.
25	72.0	170.	170.	170.	172.	175.	179.
26	73.0	170.	170.	170.	172.	176.	179.
27	74.0	170.	170.	170.	172.	176.	179.
28	75.0	170.	170.	170.	172.	176.	179.
29	76.0	169.	170.	171.	172.	176.	179.
30	77.0	169.	170.	171.	173.	176.	179.
31	78.0	169.	170.	171.	173.	176.	179.
32	79.0	168.	170.	171.	173.	176.	179.
33	80.0	168.	169.	171.	173.	176.	179.
34	85.0	165.	167.	169.	171.	175.	179.
35	90.0	164.	166.	169.	171.	175.	179.

Figure 5-20 (Cont.)

06/02/1993 14:03 Filename: XAMPLE3B.OUT Page 13

PRESSURE DISTRIBUTION (PSI) FOR PAD NUMBER 1

I = 19 20 21 22 23 24

AXIAL LENGTH IN.

J	DEG.	3.400	3.500	3.600	3.700	3.800	3.900
1	0.0	182.	186.	189.	192.	195.	197.
2	5.0	182.	186.	189.	192.	195.	197.
3	10.0	183.	186.	189.	192.	195.	197.
4	11.0	183.	186.	189.	192.	195.	197.
5	12.0	183.	186.	189.	192.	195.	197.
6	13.0	183.	186.	189.	192.	195.	197.
7	14.0	183.	186.	189.	192.	195.	197.
8	15.0	183.	186.	189.	192.	195.	197.
9	16.0	183.	186.	189.	192.	195.	197.
10	17.0	183.	186.	189.	192.	195.	197.
11	18.0	182.	186.	189.	192.	195.	197.
12	19.0	182.	186.	189.	192.	195.	197.
13	20.0	182.	186.	189.	192.	195.	197.
14	25.0	182.	186.	189.	192.	195.	197.
15	30.0	182.	186.	189.	192.	195.	197.
16	35.0	182.	186.	189.	192.	195.	197.
17	40.0	182.	186.	189.	192.	195.	197.
18	45.0	182.	186.	189.	192.	195.	197.
19	50.0	182.	186.	189.	192.	195.	197.
20	55.0	182.	186.	189.	192.	195.	197.
21	60.0	182.	186.	189.	192.	195.	197.
22	65.0	182.	186.	189.	192.	195.	197.
23	70.0	182.	186.	189.	192.	195.	197.
24	71.0	182.	186.	189.	192.	195.	197.
25	72.0	182.	186.	189.	192.	195.	197.
26	73.0	183.	186.	189.	192.	195.	197.
27	74.0	183.	186.	189.	192.	195.	197.
28	75.0	183.	186.	189.	192.	195.	197.
29	76.0	183.	186.	189.	192.	195.	197.
30	77.0	183.	186.	189.	192.	195.	197.
31	78.0	183.	186.	189.	192.	195.	197.
32	79.0	183.	186.	189.	192.	195.	197.
33	80.0	183.	186.	189.	192.	195.	197.
34	85.0	182.	186.	189.	192.	195.	197.
35	90.0	182.	186.	189.	192.	195.	197.

06/02/1993 14:03 Filename: XAMPLE3B.OUT Page 14

PRESSURE DISTRIBUTION (PSI) FOR PAD NUMBER 1

I = 25

AXIAL LENGTH IN.

J	DEG.	4.000
1	0.0	200.
2	5.0	200.
3	10.0	200.
4	11.0	200.
5	12.0	200.
6	13.0	200.
7	14.0	200.
8	15.0	200.
9	16.0	200.
10	17.0	200.
11	18.0	200.
12	19.0	200.
13	20.0	200.
14	25.0	200.
15	30.0	200.
16	35.0	200.
17	40.0	200.
18	45.0	200.
19	50.0	200.
20	55.0	200.
21	60.0	200.
22	65.0	200.
23	70.0	200.
24	71.0	200.
25	72.0	200.
26	73.0	200.
27	74.0	200.
28	75.0	200.
29	76.0	200.
30	77.0	200.
31	78.0	200.
32	79.0	200.
33	80.0	200.
34	85.0	200.
35	90.0	200.

MIN. PRESS= 0.00000E+00 AT 90.000 DEGREES

MAX. PRESS= 200.00 AT 90.000 DEGREES

Figure 5-20 (Cont.)

06/02/1993 14:03 Filename: XAMPLE3B.OUT Page 15

NON-DIM CLEARANCE DISTRIBUTION(H/C) FOR PAD NUMBER 2

	I =	1	2	3	4	5	6
	AXIAL LENGTH IN.	2.000	2.100	2.200	2.300	2.400	2.450
J	DEG.						
1	90.0	1.00	1.00	1.00	1.00	1.00	1.00
2	95.0	1.00	1.00	1.00	1.00	1.00	1.00
3	100.0	1.00	1.00	1.00	1.00	1.00	1.00
4	101.0	1.00	1.00	1.00	1.00	1.00	1.00
5	102.0	1.00	1.00	1.00	1.00	1.00	1.00
6	103.0	1.00	1.00	1.00	1.00	1.00	1.00
7	104.0	1.00	1.00	1.00	1.00	1.00	1.00
8	105.0	1.00	1.00	1.00	1.00	1.00	1.00
9	106.0	1.00	1.00	1.00	1.00	1.00	1.00
10	107.0	1.00	1.00	1.00	1.00	1.00	1.00
11	108.0	1.00	1.00	1.00	1.00	1.00	1.00
12	109.0	1.00	1.00	1.00	1.00	1.00	1.00
13	110.0	1.00	1.00	1.00	1.00	1.00	1.00
14	115.0	1.00	1.00	1.00	1.00	1.00	1.00
15	120.0	1.00	1.00	1.00	1.00	1.00	1.00
16	125.0	1.00	1.00	1.00	1.00	1.00	1.00
17	130.0	1.00	1.00	1.00	1.00	1.00	1.00
18	135.0	1.00	1.00	1.00	1.00	1.00	1.00
19	140.0	1.00	1.00	1.00	1.00	1.00	1.00
20	145.0	1.00	1.00	1.00	1.00	1.00	1.00
21	150.0	1.00	1.00	1.00	1.00	1.00	1.00
22	155.0	1.00	1.00	1.00	1.00	1.00	1.00
23	160.0	1.00	1.00	1.00	1.00	1.00	1.00
24	161.0	1.00	1.00	1.00	1.00	1.00	1.00
25	162.0	1.00	1.00	1.00	1.00	1.00	1.00
26	163.0	1.00	1.00	1.00	1.00	1.00	1.00
27	164.0	1.00	1.00	1.00	1.00	1.00	1.00
28	165.0	1.00	1.00	1.00	1.00	1.00	1.00
29	166.0	1.00	1.00	1.00	1.00	1.00	1.00
30	167.0	1.00	1.00	1.00	1.00	1.00	1.00
31	168.0	1.00	1.00	1.00	1.00	1.00	1.00
32	169.0	1.00	1.00	1.00	1.00	1.00	1.00
33	170.0	1.00	1.00	1.00	1.00	1.00	1.00
34	175.0	1.00	1.00	1.00	1.00	1.00	1.00
35	180.0	1.00	1.00	1.00	1.00	1.00	1.00

06/02/1993 14:03 Filename: XAMPLE3B.OUT Page 16

NON-DIM CLEARANCE DISTRIBUTION(H/C) FOR PAD NUMBER 2

	I =	7	8	9	10	11	12
	AXIAL LENGTH IN.	2.500	2.550	2.600	2.700	2.800	2.900
J	DEG.						
1	90.0	1.00	1.00	1.00	1.00	1.00	1.00
2	95.0	1.00	1.00	1.00	1.00	1.00	1.00
3	100.0	1.00	1.00	1.00	1.00	1.00	1.00
4	101.0	1.00	1.00	1.00	1.00	1.00	1.00
5	102.0	1.00	1.00	1.00	1.00	1.00	1.00
6	103.0	1.00	1.00	1.00	1.00	1.00	1.00
7	104.0	1.00	1.00	1.00	1.00	1.00	1.00
8	105.0	41.0	41.0	41.0	41.0	41.0	41.0
9	106.0	41.0	41.0	41.0	41.0	41.0	41.0
10	107.0	41.0	41.0	41.0	41.0	41.0	41.0
11	108.0	41.0	41.0	41.0	41.0	41.0	41.0
12	109.0	41.0	41.0	41.0	41.0	41.0	41.0
13	110.0	41.0	41.0	41.0	41.0	41.0	41.0
14	115.0	41.0	41.0	41.0	41.0	41.0	41.0
15	120.0	41.0	41.0	41.0	41.0	41.0	41.0
16	125.0	41.0	41.0	41.0	41.0	41.0	41.0
17	130.0	41.0	41.0	41.0	41.0	41.0	41.0
18	135.0	41.0	41.0	41.0	41.0	41.0	41.0
19	140.0	41.0	41.0	41.0	41.0	41.0	41.0
20	145.0	41.0	41.0	41.0	41.0	41.0	41.0
21	150.0	41.0	41.0	41.0	41.0	41.0	41.0
22	155.0	41.0	41.0	41.0	41.0	41.0	41.0
23	160.0	41.0	41.0	41.0	41.0	41.0	41.0
24	161.0	41.0	41.0	41.0	41.0	41.0	41.0
25	162.0	41.0	41.0	41.0	41.0	41.0	41.0
26	163.0	41.0	41.0	41.0	41.0	41.0	41.0
27	164.0	41.0	41.0	41.0	41.0	41.0	41.0
28	165.0	41.0	41.0	41.0	41.0	41.0	41.0
29	166.0	1.00	1.00	1.00	1.00	1.00	1.00
30	167.0	1.00	1.00	1.00	1.00	1.00	1.00
31	168.0	1.00	1.00	1.00	1.00	1.00	1.00
32	169.0	1.00	1.00	1.00	1.00	1.00	1.00
33	170.0	1.00	1.00	1.00	1.00	1.00	1.00
34	175.0	1.00	1.00	1.00	1.00	1.00	1.00
35	180.0	1.00	1.00	1.00	1.00	1.00	1.00

Figure 5-20 (Cont.)

06/02/1993 14:03 Filename: XAMPLE3B.OUT Page 17

NON-DIM CLEARANCE DISTRIBUTION(H/C) FOR PAD NUMBER 2

	I =	13	14	15	16	17	18
	AXIAL LENGTH IN.	2.950	3.000	3.050	3.100	3.200	3.300
J	DEG.						
1	90.0	1.00	1.00	1.00	1.00	1.00	1.00
2	95.0	1.00	1.00	1.00	1.00	1.00	1.00
3	100.0	1.00	1.00	1.00	1.00	1.00	1.00
4	101.0	1.00	1.00	1.00	1.00	1.00	1.00
5	102.0	1.00	1.00	1.00	1.00	1.00	1.00
6	103.0	1.00	1.00	1.00	1.00	1.00	1.00
7	104.0	1.00	1.00	1.00	1.00	1.00	1.00
8	105.0	41.0	41.0	41.0	1.00	1.00	1.00
9	106.0	41.0	41.0	41.0	1.00	1.00	1.00
10	107.0	41.0	41.0	41.0	1.00	1.00	1.00
11	108.0	41.0	41.0	41.0	1.00	1.00	1.00
12	109.0	41.0	41.0	41.0	1.00	1.00	1.00
13	110.0	41.0	41.0	41.0	1.00	1.00	1.00
14	115.0	41.0	41.0	41.0	1.00	1.00	1.00
15	120.0	41.0	41.0	41.0	1.00	1.00	1.00
16	125.0	41.0	41.0	41.0	1.00	1.00	1.00
17	130.0	41.0	41.0	41.0	1.00	1.00	1.00
18	135.0	41.0	41.0	41.0	1.00	1.00	1.00
19	140.0	41.0	41.0	41.0	1.00	1.00	1.00
20	145.0	41.0	41.0	41.0	1.00	1.00	1.00
21	150.0	41.0	41.0	41.0	1.00	1.00	1.00
22	155.0	41.0	41.0	41.0	1.00	1.00	1.00
23	160.0	41.0	41.0	41.0	1.00	1.00	1.00
24	161.0	41.0	41.0	41.0	1.00	1.00	1.00
25	162.0	41.0	41.0	41.0	1.00	1.00	1.00
26	163.0	41.0	41.0	41.0	1.00	1.00	1.00
27	164.0	41.0	41.0	41.0	1.00	1.00	1.00
28	165.0	41.0	41.0	41.0	1.00	1.00	1.00
29	166.0	1.00	1.00	1.00	1.00	1.00	1.00
30	167.0	1.00	1.00	1.00	1.00	1.00	1.00
31	168.0	1.00	1.00	1.00	1.00	1.00	1.00
32	169.0	1.00	1.00	1.00	1.00	1.00	1.00
33	170.0	1.00	1.00	1.00	1.00	1.00	1.00
34	175.0	1.00	1.00	1.00	1.00	1.00	1.00
35	180.0	1.00	1.00	1.00	1.00	1.00	1.00

06/02/1993 14:03 Filename: XAMPLE3B.OUT Page 18

NON-DIM CLEARANCE DISTRIBUTION(H/C) FOR PAD NUMBER 2

	I =	19	20	21	22	23	24
	AXIAL LENGTH IN.	3.400	3.500	3.600	3.700	3.800	3.900
J	DEG.						
1	90.0	1.00	1.00	1.00	1.00	1.00	1.00
2	95.0	1.00	1.00	1.00	1.00	1.00	1.00
3	100.0	1.00	1.00	1.00	1.00	1.00	1.00
4	101.0	1.00	1.00	1.00	1.00	1.00	1.00
5	102.0	1.00	1.00	1.00	1.00	1.00	1.00
6	103.0	1.00	1.00	1.00	1.00	1.00	1.00
7	104.0	1.00	1.00	1.00	1.00	1.00	1.00
8	105.0	1.00	1.00	1.00	1.00	1.00	1.00
9	106.0	1.00	1.00	1.00	1.00	1.00	1.00
10	107.0	1.00	1.00	1.00	1.00	1.00	1.00
11	108.0	1.00	1.00	1.00	1.00	1.00	1.00
12	109.0	1.00	1.00	1.00	1.00	1.00	1.00
13	110.0	1.00	1.00	1.00	1.00	1.00	1.00
14	115.0	1.00	1.00	1.00	1.00	1.00	1.00
15	120.0	1.00	1.00	1.00	1.00	1.00	1.00
16	125.0	1.00	1.00	1.00	1.00	1.00	1.00
17	130.0	1.00	1.00	1.00	1.00	1.00	1.00
18	135.0	1.00	1.00	1.00	1.00	1.00	1.00
19	140.0	1.00	1.00	1.00	1.00	1.00	1.00
20	145.0	1.00	1.00	1.00	1.00	1.00	1.00
21	150.0	1.00	1.00	1.00	1.00	1.00	1.00
22	155.0	1.00	1.00	1.00	1.00	1.00	1.00
23	160.0	1.00	1.00	1.00	1.00	1.00	1.00
24	161.0	1.00	1.00	1.00	1.00	1.00	1.00
25	162.0	1.00	1.00	1.00	1.00	1.00	1.00
26	163.0	1.00	1.00	1.00	1.00	1.00	1.00
27	164.0	1.00	1.00	1.00	1.00	1.00	1.00
28	165.0	1.00	1.00	1.00	1.00	1.00	1.00
29	166.0	1.00	1.00	1.00	1.00	1.00	1.00
30	167.0	1.00	1.00	1.00	1.00	1.00	1.00
31	168.0	1.00	1.00	1.00	1.00	1.00	1.00
32	169.0	1.00	1.00	1.00	1.00	1.00	1.00
33	170.0	1.00	1.00	1.00	1.00	1.00	1.00
34	175.0	1.00	1.00	1.00	1.00	1.00	1.00
35	180.0	1.00	1.00	1.00	1.00	1.00	1.00

Figure 5-20 (Cont.)

06/02/1993 14:03 Filename: XAMPLE3B.OUT Page 19

NON-DIM CLEARANCE DISTRIBUTION(H/C) FOR PAD NUMBER 2

I = 25

AXIAL LENGTH IN.
4.000

J	DEG.	
1	90.0	1.00
2	95.0	1.00
3	100.0	1.00
4	101.0	1.00
5	102.0	1.00
6	103.0	1.00
7	104.0	1.00
8	105.0	1.00
9	106.0	1.00
10	107.0	1.00
11	108.0	1.00
12	109.0	1.00
13	110.0	1.00
14	115.0	1.00
15	120.0	1.00
16	125.0	1.00
17	130.0	1.00
18	135.0	1.00
19	140.0	1.00
20	145.0	1.00
21	150.0	1.00
22	155.0	1.00
23	160.0	1.00
24	161.0	1.00
25	162.0	1.00
26	163.0	1.00
27	164.0	1.00
28	165.0	1.00
29	166.0	1.00
30	167.0	1.00
31	168.0	1.00
32	169.0	1.00
33	170.0	1.00
34	175.0	1.00
35	180.0	1.00

MIN. CLEAR.= 1.0000 AT 180.00 DEGREES

MAX. CLEAR.= 41.000 AT 165.00 DEGREES

06/02/1993 14:03 Filename: XAMPLE3B.OUT Page 20

PRESSURE DISTRIBUTION (PSI) FOR PAD NUMBER 2

I =		1	2	3	4	5	6
AXIAL LENGTH IN.		2.000	2.100	2.200	2.300	2.400	2.450
J	DEG.						
1	90.0	0.000E+00	57.7	84.9	104.	120.	126.
2	95.0	0.000E+00	59.0	86.8	107.	122.	128.
3	100.0	0.000E+00	62.8	92.4	114.	130.	137.
4	101.0	0.000E+00	63.7	93.8	116.	133.	140.
5	102.0	0.000E+00	64.7	95.2	118.	136.	143.
6	103.0	0.000E+00	65.6	96.7	120.	139.	147.
7	104.0	0.000E+00	66.5	98.1	122.	142.	152.
8	105.0	0.000E+00	67.4	99.5	124.	145.	156.
9	106.0	0.000E+00	68.2	101.	126.	147.	158.
10	107.0	0.000E+00	68.9	102.	127.	149.	159.
11	108.0	0.000E+00	69.6	103.	128.	150.	160.
12	109.0	0.000E+00	70.1	103.	129.	150.	160.
13	110.0	0.000E+00	70.6	104.	129.	151.	160.
14	115.0	0.000E+00	71.8	105.	131.	152.	161.
15	120.0	0.000E+00	72.2	106.	131.	152.	161.
16	125.0	0.000E+00	72.4	106.	131.	152.	161.
17	130.0	0.000E+00	72.4	106.	131.	152.	161.
18	135.0	0.000E+00	72.4	106.	131.	152.	161.
19	140.0	0.000E+00	72.4	106.	131.	152.	161.
20	145.0	0.000E+00	72.4	106.	131.	152.	161.
21	150.0	0.000E+00	72.2	106.	131.	152.	161.
22	155.0	0.000E+00	71.8	105.	131.	152.	161.
23	160.0	0.000E+00	70.6	104.	129.	151.	160.
24	161.0	0.000E+00	70.1	103.	129.	150.	160.
25	162.0	0.000E+00	69.6	103.	128.	150.	160.
26	163.0	0.000E+00	68.9	102.	127.	149.	159.
27	164.0	0.000E+00	68.2	101.	126.	147.	158.
28	165.0	0.000E+00	67.4	99.5	124.	145.	156.
29	166.0	0.000E+00	66.5	98.1	122.	142.	152.
30	167.0	0.000E+00	65.6	96.7	120.	139.	147.
31	168.0	0.000E+00	64.7	95.2	118.	136.	143.
32	169.0	0.000E+00	63.7	93.8	116.	133.	140.
33	170.0	0.000E+00	62.8	92.4	114.	130.	137.
34	175.0	0.000E+00	59.0	86.8	107.	122.	128.
35	180.0	0.000E+00	57.7	84.9	104.	120.	126.

Figure 5-20 (Cont.)

06/02/1993 14:03 Filename: XAMPLE3B.OUT Page 21

PRESSURE DISTRIBUTION (PSI) FOR PAD NUMBER 2

I =	7	8	9	10	11	12
AXIAL LENGTH IN.	2.500	2.550	2.600	2.700	2.800	2.900
J DEG.						
1 90.0	132.	137.	141.	149.	156.	161.
2 95.0	134.	139.	144.	151.	157.	163.
3 100.0	143.	147.	151.	158.	162.	166.
4 101.0	146.	150.	154.	160.	163.	167.
5 102.0	149.	154.	157.	162.	165.	167.
6 103.0	154.	158.	161.	164.	166.	168.
7 104.0	160.	163.	165.	167.	168.	169.
8 105.0	170.	170.	170.	170.	170.	170.
9 106.0	170.	170.	170.	170.	170.	170.
10 107.0	170.	170.	170.	170.	170.	170.
11 108.0	170.	170.	170.	170.	170.	170.
12 109.0	170.	170.	170.	170.	170.	170.
13 110.0	170.	170.	170.	170.	170.	170.
14 115.0	170.	170.	170.	170.	170.	170.
15 120.0	170.	170.	170.	170.	170.	170.
16 125.0	170.	170.	170.	170.	170.	170.
17 130.0	170.	170.	170.	170.	170.	170.
18 135.0	170.	170.	170.	170.	170.	170.
19 140.0	170.	170.	170.	170.	170.	170.
20 145.0	170.	170.	170.	170.	170.	170.
21 150.0	170.	170.	170.	170.	170.	170.
22 155.0	170.	170.	170.	170.	170.	170.
23 160.0	170.	170.	170.	170.	170.	170.
24 161.0	170.	170.	170.	170.	170.	170.
25 162.0	170.	170.	170.	170.	170.	170.
26 163.0	170.	170.	170.	170.	170.	170.
27 164.0	170.	170.	170.	170.	170.	170.
28 165.0	170.	170.	170.	170.	170.	170.
29 166.0	160.	163.	165.	167.	168.	169.
30 167.0	154.	158.	161.	164.	166.	168.
31 168.0	149.	154.	157.	162.	165.	167.
32 169.0	146.	150.	154.	160.	163.	167.
33 170.0	143.	147.	151.	158.	162.	166.
34 175.0	134.	139.	144.	151.	157.	163.
35 180.0	132.	137.	141.	149.	156.	161.

06/02/1993 14:03 Filename: XAMPLE3B.OUT Page 22

PRESSURE DISTRIBUTION (PSI) FOR PAD NUMBER 2

I =	13	14	15	16	17	18
AXIAL LENGTH IN.	2.950	3.000	3.050	3.100	3.200	3.300
J DEG.						
1 90.0	164.	166.	169.	171.	175.	179.
2 95.0	165.	167.	169.	171.	175.	179.
3 100.0	168.	169.	171.	173.	176.	179.
4 101.0	168.	170.	171.	173.	176.	179.
5 102.0	169.	170.	171.	173.	176.	179.
6 103.0	169.	170.	171.	173.	176.	179.
7 104.0	169.	170.	171.	172.	176.	179.
8 105.0	170.	170.	170.	172.	176.	179.
9 106.0	170.	170.	170.	172.	176.	179.
10 107.0	170.	170.	170.	172.	176.	179.
11 108.0	170.	170.	170.	172.	175.	179.
12 109.0	170.	170.	170.	172.	175.	179.
13 110.0	170.	170.	170.	172.	175.	179.
14 115.0	170.	170.	170.	172.	175.	179.
15 120.0	170.	170.	170.	171.	175.	179.
16 125.0	170.	170.	170.	171.	175.	179.
17 130.0	170.	170.	170.	171.	175.	179.
18 135.0	170.	170.	170.	171.	175.	179.
19 140.0	170.	170.	170.	171.	175.	179.
20 145.0	170.	170.	170.	171.	175.	179.
21 150.0	170.	170.	170.	171.	175.	179.
22 155.0	170.	170.	170.	172.	175.	179.
23 160.0	170.	170.	170.	172.	175.	179.
24 161.0	170.	170.	170.	172.	175.	179.
25 162.0	170.	170.	170.	172.	175.	179.
26 163.0	170.	170.	170.	172.	176.	179.
27 164.0	170.	170.	170.	172.	176.	179.
28 165.0	170.	170.	170.	172.	176.	179.
29 166.0	169.	170.	171.	172.	176.	179.
30 167.0	169.	170.	171.	173.	176.	179.
31 168.0	169.	170.	171.	173.	176.	179.
32 169.0	168.	170.	171.	173.	176.	179.
33 170.0	168.	169.	171.	173.	176.	179.
34 175.0	165.	167.	169.	171.	175.	179.
35 180.0	164.	166.	169.	171.	175.	179.

Figure 5-20 (Cont.)

06/02/1993 14:03 Filename: XAMPLE3B.OUT Page 23

PRESSURE DISTRIBUTION (PSI) FOR PAD NUMBER 2

I = 19 20 21 22 23 24

AXIAL LENGTH IN.

J	DEG.	3.400	3.500	3.600	3.700	3.800	3.900
1	90.0	182.	186.	189.	192.	195.	197.
2	95.0	182.	186.	189.	192.	195.	197.
3	100.0	183.	186.	189.	192.	195.	197.
4	101.0	183.	186.	189.	192.	195.	197.
5	102.0	183.	186.	189.	192.	195.	197.
6	103.0	183.	186.	189.	192.	195.	197.
7	104.0	183.	186.	189.	192.	195.	197.
8	105.0	183.	186.	189.	192.	195.	197.
9	106.0	183.	186.	189.	192.	195.	197.
10	107.0	183.	186.	189.	192.	195.	197.
11	108.0	182.	186.	189.	192.	195.	197.
12	109.0	182.	186.	189.	192.	195.	197.
13	110.0	182.	186.	189.	192.	195.	197.
14	115.0	182.	186.	189.	192.	195.	197.
15	120.0	182.	186.	189.	192.	195.	197.
16	125.0	182.	186.	189.	192.	195.	197.
17	130.0	182.	186.	189.	192.	195.	197.
18	135.0	182.	186.	189.	192.	195.	197.
19	140.0	182.	186.	189.	192.	195.	197.
20	145.0	182.	186.	189.	192.	195.	197.
21	150.0	182.	186.	189.	192.	195.	197.
22	155.0	182.	186.	189.	192.	195.	197.
23	160.0	182.	186.	189.	192.	195.	197.
24	161.0	182.	186.	189.	192.	195.	197.
25	162.0	182.	186.	189.	192.	195.	197.
26	163.0	183.	186.	189.	192.	195.	197.
27	164.0	183.	186.	189.	192.	195.	197.
28	165.0	183.	186.	189.	192.	195.	197.
29	166.0	183.	186.	189.	192.	195.	197.
30	167.0	183.	186.	189.	192.	195.	197.
31	168.0	183.	186.	189.	192.	195.	197.
32	169.0	183.	186.	189.	192.	195.	197.
33	170.0	183.	186.	189.	192.	195.	197.
34	175.0	182.	186.	189.	192.	195.	197.
35	180.0	182.	186.	189.	192.	195.	197.

06/02/1993 14:03 Filename: XAMPLE3B.OUT Page 24

PRESSURE DISTRIBUTION (PSI) FOR PAD NUMBER 2

I = 25

AXIAL LENGTH IN.

J	DEG.	4.000
1	90.0	200.
2	95.0	200.
3	100.0	200.
4	101.0	200.
5	102.0	200.
6	103.0	200.
7	104.0	200.
8	105.0	200.
9	106.0	200.
10	107.0	200.
11	108.0	200.
12	109.0	200.
13	110.0	200.
14	115.0	200.
15	120.0	200.
16	125.0	200.
17	130.0	200.
18	135.0	200.
19	140.0	200.
20	145.0	200.
21	150.0	200.
22	155.0	200.
23	160.0	200.
24	161.0	200.
25	162.0	200.
26	163.0	200.
27	164.0	200.
28	165.0	200.
29	166.0	200.
30	167.0	200.
31	168.0	200.
32	169.0	200.
33	170.0	200.
34	175.0	200.
35	180.0	200.

MIN. PRESS= 0.00000E+00 AT 180.00 DEGREES

MAX. PRESS= 200.00 AT 180.00 DEGREES

Figure 5-20 (Cont.)

06/02/1993 14:03 Filename: XAMPLE3B.OUT Page 25

NON-DIM CLEARANCE DISTRIBUTION(H/C) FOR PAD NUMBER 3

I =		1	2	3	4	5	6
AXIAL LENGTH IN.		2.000	2.100	2.200	2.300	2.400	2.450
J	DEG.						
1	180.0	1.00	1.00	1.00	1.00	1.00	1.00
2	185.0	1.00	1.00	1.00	1.00	1.00	1.00
3	190.0	1.00	1.00	1.00	1.00	1.00	1.00
4	191.0	1.00	1.00	1.00	1.00	1.00	1.00
5	192.0	1.00	1.00	1.00	1.00	1.00	1.00
6	193.0	1.00	1.00	1.00	1.00	1.00	1.00
7	194.0	1.00	1.00	1.00	1.00	1.00	1.00
8	195.0	1.00	1.00	1.00	1.00	1.00	1.00
9	196.0	1.00	1.00	1.00	1.00	1.00	1.00
10	197.0	1.00	1.00	1.00	1.00	1.00	1.00
11	198.0	1.00	1.00	1.00	1.00	1.00	1.00
12	199.0	1.00	1.00	1.00	1.00	1.00	1.00
13	200.0	1.00	1.00	1.00	1.00	1.00	1.00
14	205.0	1.00	1.00	1.00	1.00	1.00	1.00
15	210.0	1.00	1.00	1.00	1.00	1.00	1.00
16	215.0	1.00	1.00	1.00	1.00	1.00	1.00
17	220.0	1.00	1.00	1.00	1.00	1.00	1.00
18	225.0	1.00	1.00	1.00	1.00	1.00	1.00
19	230.0	1.00	1.00	1.00	1.00	1.00	1.00
20	235.0	1.00	1.00	1.00	1.00	1.00	1.00
21	240.0	1.00	1.00	1.00	1.00	1.00	1.00
22	245.0	1.00	1.00	1.00	1.00	1.00	1.00
23	250.0	1.00	1.00	1.00	1.00	1.00	1.00
24	251.0	1.00	1.00	1.00	1.00	1.00	1.00
25	252.0	1.00	1.00	1.00	1.00	1.00	1.00
26	253.0	1.00	1.00	1.00	1.00	1.00	1.00
27	254.0	1.00	1.00	1.00	1.00	1.00	1.00
28	255.0	1.00	1.00	1.00	1.00	1.00	1.00
29	256.0	1.00	1.00	1.00	1.00	1.00	1.00
30	257.0	1.00	1.00	1.00	1.00	1.00	1.00
31	258.0	1.00	1.00	1.00	1.00	1.00	1.00
32	259.0	1.00	1.00	1.00	1.00	1.00	1.00
33	260.0	1.00	1.00	1.00	1.00	1.00	1.00
34	265.0	1.00	1.00	1.00	1.00	1.00	1.00
35	270.0	1.00	1.00	1.00	1.00	1.00	1.00

06/02/1993 14:03 Filename: XAMPLE3B.OUT Page 26

NON-DIM CLEARANCE DISTRIBUTION(H/C) FOR PAD NUMBER 3

I =		7	8	9	10	11	12
AXIAL LENGTH IN.		2.500	2.550	2.600	2.700	2.800	2.900
J	DEG.						
1	180.0	1.00	1.00	1.00	1.00	1.00	1.00
2	185.0	1.00	1.00	1.00	1.00	1.00	1.00
3	190.0	1.00	1.00	1.00	1.00	1.00	1.00
4	191.0	1.00	1.00	1.00	1.00	1.00	1.00
5	192.0	1.00	1.00	1.00	1.00	1.00	1.00
6	193.0	1.00	1.00	1.00	1.00	1.00	1.00
7	194.0	1.00	1.00	1.00	1.00	1.00	1.00
8	195.0	41.0	41.0	41.0	41.0	41.0	41.0
9	196.0	41.0	41.0	41.0	41.0	41.0	41.0
10	197.0	41.0	41.0	41.0	41.0	41.0	41.0
11	198.0	41.0	41.0	41.0	41.0	41.0	41.0
12	199.0	41.0	41.0	41.0	41.0	41.0	41.0
13	200.0	41.0	41.0	41.0	41.0	41.0	41.0
14	205.0	41.0	41.0	41.0	41.0	41.0	41.0
15	210.0	41.0	41.0	41.0	41.0	41.0	41.0
16	215.0	41.0	41.0	41.0	41.0	41.0	41.0
17	220.0	41.0	41.0	41.0	41.0	41.0	41.0
18	225.0	41.0	41.0	41.0	41.0	41.0	41.0
19	230.0	41.0	41.0	41.0	41.0	41.0	41.0
20	235.0	41.0	41.0	41.0	41.0	41.0	41.0
21	240.0	41.0	41.0	41.0	41.0	41.0	41.0
22	245.0	41.0	41.0	41.0	41.0	41.0	41.0
23	250.0	41.0	41.0	41.0	41.0	41.0	41.0
24	251.0	41.0	41.0	41.0	41.0	41.0	41.0
25	252.0	41.0	41.0	41.0	41.0	41.0	41.0
26	253.0	41.0	41.0	41.0	41.0	41.0	41.0
27	254.0	41.0	41.0	41.0	41.0	41.0	41.0
28	255.0	41.0	41.0	41.0	41.0	41.0	41.0
29	256.0	1.00	1.00	1.00	1.00	1.00	1.00
30	257.0	1.00	1.00	1.00	1.00	1.00	1.00
31	258.0	1.00	1.00	1.00	1.00	1.00	1.00
32	259.0	1.00	1.00	1.00	1.00	1.00	1.00
33	260.0	1.00	1.00	1.00	1.00	1.00	1.00
34	265.0	1.00	1.00	1.00	1.00	1.00	1.00
35	270.0	1.00	1.00	1.00	1.00	1.00	1.00

Figure 5-20 (Cont.)

06/02/1993 14:03 Filename: XAMPLE3B.OUT Page 27

NON-DIM CLEARANCE DISTRIBUTION(H/C) FOR PAD NUMBER 3

	I =	13	14	15	16	17	18
	AXIAL LENGTH IN.	2.950	3.000	3.050	3.100	3.200	3.300
J	DEG.						
1	180.0	1.00	1.00	1.00	1.00	1.00	1.00
2	185.0	1.00	1.00	1.00	1.00	1.00	1.00
3	190.0	1.00	1.00	1.00	1.00	1.00	1.00
4	191.0	1.00	1.00	1.00	1.00	1.00	1.00
5	192.0	1.00	1.00	1.00	1.00	1.00	1.00
6	193.0	1.00	1.00	1.00	1.00	1.00	1.00
7	194.0	1.00	1.00	1.00	1.00	1.00	1.00
8	195.0	41.0	41.0	41.0	1.00	1.00	1.00
9	196.0	41.0	41.0	41.0	1.00	1.00	1.00
10	197.0	41.0	41.0	41.0	1.00	1.00	1.00
11	198.0	41.0	41.0	41.0	1.00	1.00	1.00
12	199.0	41.0	41.0	41.0	1.00	1.00	1.00
13	200.0	41.0	41.0	41.0	1.00	1.00	1.00
14	205.0	41.0	41.0	41.0	1.00	1.00	1.00
15	210.0	41.0	41.0	41.0	1.00	1.00	1.00
16	215.0	41.0	41.0	41.0	1.00	1.00	1.00
17	220.0	41.0	41.0	41.0	1.00	1.00	1.00
18	225.0	41.0	41.0	41.0	1.00	1.00	1.00
19	230.0	41.0	41.0	41.0	1.00	1.00	1.00
20	235.0	41.0	41.0	41.0	1.00	1.00	1.00
21	240.0	41.0	41.0	41.0	1.00	1.00	1.00
22	245.0	41.0	41.0	41.0	1.00	1.00	1.00
23	250.0	41.0	41.0	41.0	1.00	1.00	1.00
24	251.0	41.0	41.0	41.0	1.00	1.00	1.00
25	252.0	41.0	41.0	41.0	1.00	1.00	1.00
26	253.0	41.0	41.0	41.0	1.00	1.00	1.00
27	254.0	41.0	41.0	41.0	1.00	1.00	1.00
28	255.0	41.0	41.0	41.0	1.00	1.00	1.00
29	256.0	1.00	1.00	1.00	1.00	1.00	1.00
30	257.0	1.00	1.00	1.00	1.00	1.00	1.00
31	258.0	1.00	1.00	1.00	1.00	1.00	1.00
32	259.0	1.00	1.00	1.00	1.00	1.00	1.00
33	260.0	1.00	1.00	1.00	1.00	1.00	1.00
34	265.0	1.00	1.00	1.00	1.00	1.00	1.00
35	270.0	1.00	1.00	1.00	1.00	1.00	1.00

06/02/1993 14:03 Filename: XAMPLE3B.OUT Page 28

NON-DIM CLEARANCE DISTRIBUTION(H/C) FOR PAD NUMBER 3

	I =	19	20	21	22	23	24
	AXIAL LENGTH IN.	3.400	3.500	3.600	3.700	3.800	3.900
J	DEG.						
1	180.0	1.00	1.00	1.00	1.00	1.00	1.00
2	185.0	1.00	1.00	1.00	1.00	1.00	1.00
3	190.0	1.00	1.00	1.00	1.00	1.00	1.00
4	191.0	1.00	1.00	1.00	1.00	1.00	1.00
5	192.0	1.00	1.00	1.00	1.00	1.00	1.00
6	193.0	1.00	1.00	1.00	1.00	1.00	1.00
7	194.0	1.00	1.00	1.00	1.00	1.00	1.00
8	195.0	1.00	1.00	1.00	1.00	1.00	1.00
9	196.0	1.00	1.00	1.00	1.00	1.00	1.00
10	197.0	1.00	1.00	1.00	1.00	1.00	1.00
11	198.0	1.00	1.00	1.00	1.00	1.00	1.00
12	199.0	1.00	1.00	1.00	1.00	1.00	1.00
13	200.0	1.00	1.00	1.00	1.00	1.00	1.00
14	205.0	1.00	1.00	1.00	1.00	1.00	1.00
15	210.0	1.00	1.00	1.00	1.00	1.00	1.00
16	215.0	1.00	1.00	1.00	1.00	1.00	1.00
17	220.0	1.00	1.00	1.00	1.00	1.00	1.00
18	225.0	1.00	1.00	1.00	1.00	1.00	1.00
19	230.0	1.00	1.00	1.00	1.00	1.00	1.00
20	235.0	1.00	1.00	1.00	1.00	1.00	1.00
21	240.0	1.00	1.00	1.00	1.00	1.00	1.00
22	245.0	1.00	1.00	1.00	1.00	1.00	1.00
23	250.0	1.00	1.00	1.00	1.00	1.00	1.00
24	251.0	1.00	1.00	1.00	1.00	1.00	1.00
25	252.0	1.00	1.00	1.00	1.00	1.00	1.00
26	253.0	1.00	1.00	1.00	1.00	1.00	1.00
27	254.0	1.00	1.00	1.00	1.00	1.00	1.00
28	255.0	1.00	1.00	1.00	1.00	1.00	1.00
29	256.0	1.00	1.00	1.00	1.00	1.00	1.00
30	257.0	1.00	1.00	1.00	1.00	1.00	1.00
31	258.0	1.00	1.00	1.00	1.00	1.00	1.00
32	259.0	1.00	1.00	1.00	1.00	1.00	1.00
33	260.0	1.00	1.00	1.00	1.00	1.00	1.00
34	265.0	1.00	1.00	1.00	1.00	1.00	1.00
35	270.0	1.00	1.00	1.00	1.00	1.00	1.00

Figure 5-20 (Cont.)

NON-DIM CLEARANCE DISTRIBUTION(H/C) FOR PAD NUMBER 3

I = 25

AXIAL LENGTH IN.
4.000

J	DEG.	
1	180.0	1.00
2	185.0	1.00
3	190.0	1.00
4	191.0	1.00
5	192.0	1.00
6	193.0	1.00
7	194.0	1.00
8	195.0	1.00
9	196.0	1.00
10	197.0	1.00
11	198.0	1.00
12	199.0	1.00
13	200.0	1.00
14	205.0	1.00
15	210.0	1.00
16	215.0	1.00
17	220.0	1.00
18	225.0	1.00
19	230.0	1.00
20	235.0	1.00
21	240.0	1.00
22	245.0	1.00
23	250.0	1.00
24	251.0	1.00
25	252.0	1.00
26	253.0	1.00
27	254.0	1.00
28	255.0	1.00
29	256.0	1.00
30	257.0	1.00
31	258.0	1.00
32	259.0	1.00
33	260.0	1.00
34	265.0	1.00
35	270.0	1.00

MIN. CLEAR.= 1.0000 AT 270.00 DEGREES

MAX. CLEAR.= 41.000 AT 255.00 DEGREES

PRESSURE DISTRIBUTION (PSI) FOR PAD NUMBER 3

I =	1	2	3	4	5	6
AXIAL LENGTH IN.	2.000	2.100	2.200	2.300	2.400	2.450
J DEG.						
1 180.0	0.000E+00	57.7	84.9	104.	120.	126.
2 185.0	0.000E+00	59.0	86.8	107.	122.	128.
3 190.0	0.000E+00	62.8	92.4	114.	130.	137.
4 191.0	0.000E+00	63.7	93.8	116.	133.	140.
5 192.0	0.000E+00	64.7	95.2	118.	136.	143.
6 193.0	0.000E+00	65.6	96.7	120.	139.	147.
7 194.0	0.000E+00	66.5	98.1	122.	142.	152.
8 195.0	0.000E+00	67.4	99.5	124.	145.	156.
9 196.0	0.000E+00	68.2	101.	126.	147.	158.
10 197.0	0.000E+00	68.9	102.	127.	149.	159.
11 198.0	0.000E+00	69.6	103.	128.	150.	160.
12 199.0	0.000E+00	70.1	103.	129.	150.	160.
13 200.0	0.000E+00	70.6	104.	129.	151.	160.
14 205.0	0.000E+00	71.8	105.	131.	152.	161.
15 210.0	0.000E+00	72.2	106.	131.	152.	161.
16 215.0	0.000E+00	72.4	106.	131.	152.	161.
17 220.0	0.000E+00	72.4	106.	131.	152.	161.
18 225.0	0.000E+00	72.4	106.	131.	152.	161.
19 230.0	0.000E+00	72.4	106.	131.	152.	161.
20 235.0	0.000E+00	72.4	106.	131.	152.	161.
21 240.0	0.000E+00	72.2	106.	131.	152.	161.
22 245.0	0.000E+00	71.8	105.	131.	152.	161.
23 250.0	0.000E+00	70.6	104.	129.	151.	160.
24 251.0	0.000E+00	70.1	103.	129.	150.	160.
25 252.0	0.000E+00	69.6	103.	128.	150.	160.
26 253.0	0.000E+00	68.9	102.	127.	149.	159.
27 254.0	0.000E+00	68.2	101.	126.	147.	158.
28 255.0	0.000E+00	67.4	99.5	124.	145.	156.
29 256.0	0.000E+00	66.5	98.1	122.	142.	152.
30 257.0	0.000E+00	65.6	96.7	120.	139.	147.
31 258.0	0.000E+00	64.7	95.2	118.	136.	143.
32 259.0	0.000E+00	63.7	93.8	116.	133.	140.
33 260.0	0.000E+00	62.8	92.4	114.	130.	137.
34 265.0	0.000E+00	59.0	86.8	107.	122.	128.
35 270.0	0.000E+00	57.7	84.9	104.	120.	126.

Figure 5-20 (Cont.)

06/02/1993 14:03 Filename: XAMPLE3B.OUT Page 31

PRESSURE DISTRIBUTION (PSI) FOR PAD NUMBER 3

	I =	7	8	9	10	11	12
AXIAL LENGTH IN.		2.500	2.550	2.600	2.700	2.800	2.900
J	DEG.						
1	180.0	132.	137.	141.	149.	156.	161.
2	185.0	134.	139.	144.	151.	157.	163.
3	190.0	143.	147.	151.	158.	162.	166.
4	191.0	146.	150.	154.	160.	163.	167.
5	192.0	149.	154.	157.	162.	165.	167.
6	193.0	154.	158.	161.	164.	166.	168.
7	194.0	160.	163.	165.	167.	168.	169.
8	195.0	170.	170.	170.	170.	170.	170.
9	196.0	170.	170.	170.	170.	170.	170.
10	197.0	170.	170.	170.	170.	170.	170.
11	198.0	170.	170.	170.	170.	170.	170.
12	199.0	170.	170.	170.	170.	170.	170.
13	200.0	170.	170.	170.	170.	170.	170.
14	205.0	170.	170.	170.	170.	170.	170.
15	210.0	170.	170.	170.	170.	170.	170.
16	215.0	170.	170.	170.	170.	170.	170.
17	220.0	170.	170.	170.	170.	170.	170.
18	225.0	170.	170.	170.	170.	170.	170.
19	230.0	170.	170.	170.	170.	170.	170.
20	235.0	170.	170.	170.	170.	170.	170.
21	240.0	170.	170.	170.	170.	170.	170.
22	245.0	170.	170.	170.	170.	170.	170.
23	250.0	170.	170.	170.	170.	170.	170.
24	251.0	170.	170.	170.	170.	170.	170.
25	252.0	170.	170.	170.	170.	170.	170.
26	253.0	170.	170.	170.	170.	170.	170.
27	254.0	170.	170.	170.	170.	170.	170.
28	255.0	170.	170.	170.	170.	170.	170.
29	256.0	160.	163.	165.	167.	168.	169.
30	257.0	154.	158.	161.	164.	166.	168.
31	258.0	149.	154.	157.	162.	165.	167.
32	259.0	146.	150.	154.	160.	163.	167.
33	260.0	143.	147.	151.	158.	162.	166.
34	265.0	134.	139.	144.	151.	157.	163.
35	270.0	132.	137.	141.	149.	156.	161.

06/02/1993 14:03 Filename: XAMPLE3B.OUT Page 32

PRESSURE DISTRIBUTION (PSI) FOR PAD NUMBER 3

	I =	13	14	15	16	17	18
AXIAL LENGTH IN.		2.950	3.000	3.050	3.100	3.200	3.300
J	DEG.						
1	180.0	164.	166.	169.	171.	175.	179.
2	185.0	165.	167.	169.	171.	175.	179.
3	190.0	168.	169.	171.	173.	176.	179.
4	191.0	168.	170.	171.	173.	176.	179.
5	192.0	169.	170.	171.	173.	176.	179.
6	193.0	169.	170.	171.	173.	176.	179.
7	194.0	169.	170.	171.	172.	176.	179.
8	195.0	170.	170.	170.	172.	176.	179.
9	196.0	170.	170.	170.	172.	176.	179.
10	197.0	170.	170.	170.	172.	176.	179.
11	198.0	170.	170.	170.	172.	175.	179.
12	199.0	170.	170.	170.	172.	175.	179.
13	200.0	170.	170.	170.	172.	175.	179.
14	205.0	170.	170.	170.	172.	175.	179.
15	210.0	170.	170.	170.	171.	175.	179.
16	215.0	170.	170.	170.	171.	175.	179.
17	220.0	170.	170.	170.	171.	175.	179.
18	225.0	170.	170.	170.	171.	175.	179.
19	230.0	170.	170.	170.	171.	175.	179.
20	235.0	170.	170.	170.	171.	175.	179.
21	240.0	170.	170.	170.	171.	175.	179.
22	245.0	170.	170.	170.	172.	175.	179.
23	250.0	170.	170.	170.	172.	175.	179.
24	251.0	170.	170.	170.	172.	175.	179.
25	252.0	170.	170.	170.	172.	175.	179.
26	253.0	170.	170.	170.	172.	176.	179.
27	254.0	170.	170.	170.	172.	176.	179.
28	255.0	170.	170.	170.	172.	176.	179.
29	256.0	169.	170.	171.	172.	176.	179.
30	257.0	169.	170.	171.	173.	176.	179.
31	258.0	169.	170.	171.	173.	176.	179.
32	259.0	168.	170.	171.	173.	176.	179.
33	260.0	168.	169.	171.	173.	176.	179.
34	265.0	165.	167.	169.	171.	175.	179.
35	270.0	164.	166.	169.	171.	175.	179.

Figure 5-20 (Cont.)

06/02/1993 14:03 Filename: XAMPLE3B.OUT Page 33

PRESSURE DISTRIBUTION (PSI) FOR PAD NUMBER 3

I =	19	20	21	22	23	24
AXIAL LENGTH IN.	3.400	3.500	3.600	3.700	3.800	3.900
J DEG.						
1 180.0	182.	186.	189.	192.	195.	197.
2 185.0	182.	186.	189.	192.	195.	197.
3 190.0	183.	186.	189.	192.	195.	197.
4 191.0	183.	186.	189.	192.	195.	197.
5 192.0	183.	186.	189.	192.	195.	197.
6 193.0	183.	186.	189.	192.	195.	197.
7 194.0	183.	186.	189.	192.	195.	197.
8 195.0	183.	186.	189.	192.	195.	197.
9 196.0	183.	186.	189.	192.	195.	197.
10 197.0	183.	186.	189.	192.	195.	197.
11 198.0	182.	186.	189.	192.	195.	197.
12 199.0	182.	186.	189.	192.	195.	197.
13 200.0	182.	186.	189.	192.	195.	197.
14 205.0	182.	186.	189.	192.	195.	197.
15 210.0	182.	186.	189.	192.	195.	197.
16 215.0	182.	186.	189.	192.	195.	197.
17 220.0	182.	186.	189.	192.	195.	197.
18 225.0	182.	186.	189.	192.	195.	197.
19 230.0	182.	186.	189.	192.	195.	197.
20 235.0	182.	186.	189.	192.	195.	197.
21 240.0	182.	186.	189.	192.	195.	197.
22 245.0	182.	186.	189.	192.	195.	197.
23 250.0	182.	186.	189.	192.	195.	197.
24 251.0	182.	186.	189.	192.	195.	197.
25 252.0	182.	186.	189.	192.	195.	197.
26 253.0	183.	186.	189.	192.	195.	197.
27 254.0	183.	186.	189.	192.	195.	197.
28 255.0	183.	186.	189.	192.	195.	197.
29 256.0	183.	186.	189.	192.	195.	197.
30 257.0	183.	186.	189.	192.	195.	197.
31 258.0	183.	186.	189.	192.	195.	197.
32 259.0	183.	186.	189.	192.	195.	197.
33 260.0	183.	186.	189.	192.	195.	197.
34 265.0	182.	186.	189.	192.	195.	197.
35 270.0	182.	186.	189.	192.	195.	197.

06/02/1993 14:03 Filename: XAMPLE3B.OUT Page 34

PRESSURE DISTRIBUTION (PSI) FOR PAD NUMBER 3

I =	25
AXIAL LENGTH IN.	4.000
J DEG.	
1 180.0	200.
2 185.0	200.
3 190.0	200.
4 191.0	200.
5 192.0	200.
6 193.0	200.
7 194.0	200.
8 195.0	200.
9 196.0	200.
10 197.0	200.
11 198.0	200.
12 199.0	200.
13 200.0	200.
14 205.0	200.
15 210.0	200.
16 215.0	200.
17 220.0	200.
18 225.0	200.
19 230.0	200.
20 235.0	200.
21 240.0	200.
22 245.0	200.
23 250.0	200.
24 251.0	200.
25 252.0	200.
26 253.0	200.
27 254.0	200.
28 255.0	200.
29 256.0	200.
30 257.0	200.
31 258.0	200.
32 259.0	200.
33 260.0	200.
34 265.0	200.
35 270.0	200.

MIN. PRESS= 0.00000E+00 AT 270.00 DEGREES

MAX. PRESS= 200.00 AT 270.00 DEGREES

Figure 5-20 (Cont.)

06/02/1993 14:03 Filename: XAMPLE3B.OUT Page 35

NON-DIM CLEARANCE DISTRIBUTION(H/C) FOR PAD NUMBER 4

	I =	1	2	3	4	5	6
	AXIAL LENGTH IN.	2.000	2.100	2.200	2.300	2.400	2.450
J	DEG.						
1	270.0	1.00	1.00	1.00	1.00	1.00	1.00
2	275.0	1.00	1.00	1.00	1.00	1.00	1.00
3	280.0	1.00	1.00	1.00	1.00	1.00	1.00
4	281.0	1.00	1.00	1.00	1.00	1.00	1.00
5	282.0	1.00	1.00	1.00	1.00	1.00	1.00
6	283.0	1.00	1.00	1.00	1.00	1.00	1.00
7	284.0	1.00	1.00	1.00	1.00	1.00	1.00
8	285.0	1.00	1.00	1.00	1.00	1.00	1.00
9	286.0	1.00	1.00	1.00	1.00	1.00	1.00
10	287.0	1.00	1.00	1.00	1.00	1.00	1.00
11	288.0	1.00	1.00	1.00	1.00	1.00	1.00
12	289.0	1.00	1.00	1.00	1.00	1.00	1.00
13	290.0	1.00	1.00	1.00	1.00	1.00	1.00
14	295.0	1.00	1.00	1.00	1.00	1.00	1.00
15	300.0	1.00	1.00	1.00	1.00	1.00	1.00
16	305.0	1.00	1.00	1.00	1.00	1.00	1.00
17	310.0	1.00	1.00	1.00	1.00	1.00	1.00
18	315.0	1.00	1.00	1.00	1.00	1.00	1.00
19	320.0	1.00	1.00	1.00	1.00	1.00	1.00
20	325.0	1.00	1.00	1.00	1.00	1.00	1.00
21	330.0	1.00	1.00	1.00	1.00	1.00	1.00
22	335.0	1.00	1.00	1.00	1.00	1.00	1.00
23	340.0	1.00	1.00	1.00	1.00	1.00	1.00
24	341.0	1.00	1.00	1.00	1.00	1.00	1.00
25	342.0	1.00	1.00	1.00	1.00	1.00	1.00
26	343.0	1.00	1.00	1.00	1.00	1.00	1.00
27	344.0	1.00	1.00	1.00	1.00	1.00	1.00
28	345.0	1.00	1.00	1.00	1.00	1.00	1.00
29	346.0	1.00	1.00	1.00	1.00	1.00	1.00
30	347.0	1.00	1.00	1.00	1.00	1.00	1.00
31	348.0	1.00	1.00	1.00	1.00	1.00	1.00
32	349.0	1.00	1.00	1.00	1.00	1.00	1.00
33	350.0	1.00	1.00	1.00	1.00	1.00	1.00
34	355.0	1.00	1.00	1.00	1.00	1.00	1.00
35	360.0	1.00	1.00	1.00	1.00	1.00	1.00

06/02/1993 14:03 Filename: XAMPLE3B.OUT Page 36

NON-DIM CLEARANCE DISTRIBUTION(H/C) FOR PAD NUMBER 4

	I =	7	8	9	10	11	12
	AXIAL LENGTH IN.	2.500	2.550	2.600	2.700	2.800	2.900
J	DEG.						
1	270.0	1.00	1.00	1.00	1.00	1.00	1.00
2	275.0	1.00	1.00	1.00	1.00	1.00	1.00
3	280.0	1.00	1.00	1.00	1.00	1.00	1.00
4	281.0	1.00	1.00	1.00	1.00	1.00	1.00
5	282.0	1.00	1.00	1.00	1.00	1.00	1.00
6	283.0	1.00	1.00	1.00	1.00	1.00	1.00
7	284.0	1.00	1.00	1.00	1.00	1.00	1.00
8	285.0	41.0	41.0	41.0	41.0	41.0	41.0
9	286.0	41.0	41.0	41.0	41.0	41.0	41.0
10	287.0	41.0	41.0	41.0	41.0	41.0	41.0
11	288.0	41.0	41.0	41.0	41.0	41.0	41.0
12	289.0	41.0	41.0	41.0	41.0	41.0	41.0
13	290.0	41.0	41.0	41.0	41.0	41.0	41.0
14	295.0	41.0	41.0	41.0	41.0	41.0	41.0
15	300.0	41.0	41.0	41.0	41.0	41.0	41.0
16	305.0	41.0	41.0	41.0	41.0	41.0	41.0
17	310.0	41.0	41.0	41.0	41.0	41.0	41.0
18	315.0	41.0	41.0	41.0	41.0	41.0	41.0
19	320.0	41.0	41.0	41.0	41.0	41.0	41.0
20	325.0	41.0	41.0	41.0	41.0	41.0	41.0
21	330.0	41.0	41.0	41.0	41.0	41.0	41.0
22	335.0	41.0	41.0	41.0	41.0	41.0	41.0
23	340.0	41.0	41.0	41.0	41.0	41.0	41.0
24	341.0	41.0	41.0	41.0	41.0	41.0	41.0
25	342.0	41.0	41.0	41.0	41.0	41.0	41.0
26	343.0	41.0	41.0	41.0	41.0	41.0	41.0
27	344.0	41.0	41.0	41.0	41.0	41.0	41.0
28	345.0	41.0	41.0	41.0	41.0	41.0	41.0
29	346.0	1.00	1.00	1.00	1.00	1.00	1.00
30	347.0	1.00	1.00	1.00	1.00	1.00	1.00
31	348.0	1.00	1.00	1.00	1.00	1.00	1.00
32	349.0	1.00	1.00	1.00	1.00	1.00	1.00
33	350.0	1.00	1.00	1.00	1.00	1.00	1.00
34	355.0	1.00	1.00	1.00	1.00	1.00	1.00
35	360.0	1.00	1.00	1.00	1.00	1.00	1.00

Figure 5-20 (Cont.)

06/02/1993 14:03 Filename: XAMPLE3B.OUT Page 37

NON-DIM CLEARANCE DISTRIBUTION(H/C) FOR PAD NUMBER 4

I =		13	14	15	16	17	18
AXIAL LENGTH IN.		2.950	3.000	3.050	3.100	3.200	3.300
J	DEG.						
1	270.0	1.00	1.00	1.00	1.00	1.00	1.00
2	275.0	1.00	1.00	1.00	1.00	1.00	1.00
3	280.0	1.00	1.00	1.00	1.00	1.00	1.00
4	281.0	1.00	1.00	1.00	1.00	1.00	1.00
5	282.0	1.00	1.00	1.00	1.00	1.00	1.00
6	283.0	1.00	1.00	1.00	1.00	1.00	1.00
7	284.0	1.00	1.00	1.00	1.00	1.00	1.00
8	285.0	41.0	41.0	41.0	1.00	1.00	1.00
9	286.0	41.0	41.0	41.0	1.00	1.00	1.00
10	287.0	41.0	41.0	41.0	1.00	1.00	1.00
11	288.0	41.0	41.0	41.0	1.00	1.00	1.00
12	289.0	41.0	41.0	41.0	1.00	1.00	1.00
13	290.0	41.0	41.0	41.0	1.00	1.00	1.00
14	295.0	41.0	41.0	41.0	1.00	1.00	1.00
15	300.0	41.0	41.0	41.0	1.00	1.00	1.00
16	305.0	41.0	41.0	41.0	1.00	1.00	1.00
17	310.0	41.0	41.0	41.0	1.00	1.00	1.00
18	315.0	41.0	41.0	41.0	1.00	1.00	1.00
19	320.0	41.0	41.0	41.0	1.00	1.00	1.00
20	325.0	41.0	41.0	41.0	1.00	1.00	1.00
21	330.0	41.0	41.0	41.0	1.00	1.00	1.00
22	335.0	41.0	41.0	41.0	1.00	1.00	1.00
23	340.0	41.0	41.0	41.0	1.00	1.00	1.00
24	341.0	41.0	41.0	41.0	1.00	1.00	1.00
25	342.0	41.0	41.0	41.0	1.00	1.00	1.00
26	343.0	41.0	41.0	41.0	1.00	1.00	1.00
27	344.0	41.0	41.0	41.0	1.00	1.00	1.00
28	345.0	41.0	41.0	41.0	1.00	1.00	1.00
29	346.0	1.00	1.00	1.00	1.00	1.00	1.00
30	347.0	1.00	1.00	1.00	1.00	1.00	1.00
31	348.0	1.00	1.00	1.00	1.00	1.00	1.00
32	349.0	1.00	1.00	1.00	1.00	1.00	1.00
33	350.0	1.00	1.00	1.00	1.00	1.00	1.00
34	355.0	1.00	1.00	1.00	1.00	1.00	1.00
35	360.0	1.00	1.00	1.00	1.00	1.00	1.00

06/02/1993 14:03 Filename: XAMPLE3B.OUT Page 38

NON-DIM CLEARANCE DISTRIBUTION(H/C) FOR PAD NUMBER 4

I =		19	20	21	22	23	24
AXIAL LENGTH IN.		3.400	3.500	3.600	3.700	3.800	3.900
J	DEG.						
1	270.0	1.00	1.00	1.00	1.00	1.00	1.00
2	275.0	1.00	1.00	1.00	1.00	1.00	1.00
3	280.0	1.00	1.00	1.00	1.00	1.00	1.00
4	281.0	1.00	1.00	1.00	1.00	1.00	1.00
5	282.0	1.00	1.00	1.00	1.00	1.00	1.00
6	283.0	1.00	1.00	1.00	1.00	1.00	1.00
7	284.0	1.00	1.00	1.00	1.00	1.00	1.00
8	285.0	1.00	1.00	1.00	1.00	1.00	1.00
9	286.0	1.00	1.00	1.00	1.00	1.00	1.00
10	287.0	1.00	1.00	1.00	1.00	1.00	1.00
11	288.0	1.00	1.00	1.00	1.00	1.00	1.00
12	289.0	1.00	1.00	1.00	1.00	1.00	1.00
13	290.0	1.00	1.00	1.00	1.00	1.00	1.00
14	295.0	1.00	1.00	1.00	1.00	1.00	1.00
15	300.0	1.00	1.00	1.00	1.00	1.00	1.00
16	305.0	1.00	1.00	1.00	1.00	1.00	1.00
17	310.0	1.00	1.00	1.00	1.00	1.00	1.00
18	315.0	1.00	1.00	1.00	1.00	1.00	1.00
19	320.0	1.00	1.00	1.00	1.00	1.00	1.00
20	325.0	1.00	1.00	1.00	1.00	1.00	1.00
21	330.0	1.00	1.00	1.00	1.00	1.00	1.00
22	335.0	1.00	1.00	1.00	1.00	1.00	1.00
23	340.0	1.00	1.00	1.00	1.00	1.00	1.00
24	341.0	1.00	1.00	1.00	1.00	1.00	1.00
25	342.0	1.00	1.00	1.00	1.00	1.00	1.00
26	343.0	1.00	1.00	1.00	1.00	1.00	1.00
27	344.0	1.00	1.00	1.00	1.00	1.00	1.00
28	345.0	1.00	1.00	1.00	1.00	1.00	1.00
29	346.0	1.00	1.00	1.00	1.00	1.00	1.00
30	347.0	1.00	1.00	1.00	1.00	1.00	1.00
31	348.0	1.00	1.00	1.00	1.00	1.00	1.00
32	349.0	1.00	1.00	1.00	1.00	1.00	1.00
33	350.0	1.00	1.00	1.00	1.00	1.00	1.00
34	355.0	1.00	1.00	1.00	1.00	1.00	1.00
35	360.0	1.00	1.00	1.00	1.00	1.00	1.00

Figure 5-20 (Cont.)

NON-DIM CLEARANCE DISTRIBUTION(H/C) FOR PAD NUMBER 4

I = 25

AXIAL LENGTH IN.
4.000

J	DEG.	
1	270.0	1.00
2	275.0	1.00
3	280.0	1.00
4	281.0	1.00
5	282.0	1.00
6	283.0	1.00
7	284.0	1.00
8	285.0	1.00
9	286.0	1.00
10	287.0	1.00
11	288.0	1.00
12	289.0	1.00
13	290.0	1.00
14	295.0	1.00
15	300.0	1.00
16	305.0	1.00
17	310.0	1.00
18	315.0	1.00
19	320.0	1.00
20	325.0	1.00
21	330.0	1.00
22	335.0	1.00
23	340.0	1.00
24	341.0	1.00
25	342.0	1.00
26	343.0	1.00
27	344.0	1.00
28	345.0	1.00
29	346.0	1.00
30	347.0	1.00
31	348.0	1.00
32	349.0	1.00
33	350.0	1.00
34	355.0	1.00
35	360.0	1.00

MIN. CLEAR.= 1.0000 AT 360.00 DEGREES

MAX. CLEAR.= 41.000 AT 345.00 DEGREES

PRESSURE DISTRIBUTION (PSI) FOR PAD NUMBER 4

I =	1	2	3	4	5	6
AXIAL LENGTH IN.	2.000	2.100	2.200	2.300	2.400	2.450
J DEG.						
1 270.0	0.000E+00	57.7	84.9	104.	120.	126.
2 275.0	0.000E+00	59.0	86.8	107.	122.	128.
3 280.0	0.000E+00	62.8	92.4	114.	130.	137.
4 281.0	0.000E+00	63.7	93.8	116.	133.	140.
5 282.0	0.000E+00	64.7	95.2	118.	136.	143.
6 283.0	0.000E+00	65.6	96.7	120.	139.	147.
7 284.0	0.000E+00	66.5	98.1	122.	142.	152.
8 285.0	0.000E+00	67.4	99.5	124.	145.	156.
9 286.0	0.000E+00	68.2	101.	126.	147.	158.
10 287.0	0.000E+00	68.9	102.	127.	149.	159.
11 288.0	0.000E+00	69.6	103.	128.	150.	160.
12 289.0	0.000E+00	70.1	103.	129.	150.	160.
13 290.0	0.000E+00	70.6	104.	129.	151.	160.
14 295.0	0.000E+00	71.8	105.	131.	152.	161.
15 300.0	0.000E+00	72.2	106.	131.	152.	161.
16 305.0	0.000E+00	72.4	106.	131.	152.	161.
17 310.0	0.000E+00	72.4	106.	131.	152.	161.
18 315.0	0.000E+00	72.4	106.	131.	152.	161.
19 320.0	0.000E+00	72.4	106.	131.	152.	161.
20 325.0	0.000E+00	72.4	106.	131.	152.	161.
21 330.0	0.000E+00	72.2	106.	131.	152.	161.
22 335.0	0.000E+00	71.8	105.	131.	152.	161.
23 340.0	0.000E+00	70.6	104.	129.	151.	160.
24 341.0	0.000E+00	70.1	103.	129.	150.	160.
25 342.0	0.000E+00	69.6	103.	128.	150.	160.
26 343.0	0.000E+00	68.9	102.	127.	149.	159.
27 344.0	0.000E+00	68.2	101.	126.	147.	158.
28 345.0	0.000E+00	67.4	99.5	124.	145.	156.
29 346.0	0.000E+00	66.5	98.1	122.	142.	152.
30 347.0	0.000E+00	65.6	96.7	120.	139.	147.
31 348.0	0.000E+00	64.7	95.2	118.	136.	143.
32 349.0	0.000E+00	63.7	93.8	116.	133.	140.
33 350.0	0.000E+00	62.8	92.4	114.	130.	137.
34 355.0	0.000E+00	59.0	86.8	107.	122.	128.
35 360.0	0.000E+00	57.7	84.9	104.	120.	126.

Figure 5-20 (Cont.)

06/02/1993 14:03 Filename: XAMPLE3B.OUT Page 41

PRESSURE DISTRIBUTION (PSI) FOR PAD NUMBER 4

I =	7	8	9	10	11	12
AXIAL LENGTH IN.	2.500	2.550	2.600	2.700	2.800	2.900
J DEG.						
1 270.0	132.	137.	141.	149.	156.	161.
2 275.0	134.	139.	144.	151.	157.	163.
3 280.0	143.	147.	151.	158.	162.	166.
4 281.0	146.	150.	154.	160.	163.	167.
5 282.0	149.	154.	157.	162.	165.	167.
6 283.0	154.	158.	161.	164.	166.	168.
7 284.0	160.	163.	165.	167.	168.	169.
8 285.0	170.	170.	170.	170.	170.	170.
9 286.0	170.	170.	170.	170.	170.	170.
10 287.0	170.	170.	170.	170.	170.	170.
11 288.0	170.	170.	170.	170.	170.	170.
12 289.0	170.	170.	170.	170.	170.	170.
13 290.0	170.	170.	170.	170.	170.	170.
14 295.0	170.	170.	170.	170.	170.	170.
15 300.0	170.	170.	170.	170.	170.	170.
16 305.0	170.	170.	170.	170.	170.	170.
17 310.0	170.	170.	170.	170.	170.	170.
18 315.0	170.	170.	170.	170.	170.	170.
19 320.0	170.	170.	170.	170.	170.	170.
20 325.0	170.	170.	170.	170.	170.	170.
21 330.0	170.	170.	170.	170.	170.	170.
22 335.0	170.	170.	170.	170.	170.	170.
23 340.0	170.	170.	170.	170.	170.	170.
24 341.0	170.	170.	170.	170.	170.	170.
25 342.0	170.	170.	170.	170.	170.	170.
26 343.0	170.	170.	170.	170.	170.	170.
27 344.0	170.	170.	170.	170.	170.	170.
28 345.0	170.	170.	170.	170.	170.	170.
29 346.0	160.	163.	165.	167.	168.	169.
30 347.0	154.	158.	161.	164.	166.	168.
31 348.0	149.	154.	157.	162.	165.	167.
32 349.0	146.	150.	154.	160.	163.	167.
33 350.0	143.	147.	151.	158.	162.	166.
34 355.0	134.	139.	144.	151.	157.	163.
35 360.0	132.	137.	141.	149.	156.	161.

06/02/1993 14:03 Filename: XAMPLE3B.OUT Page 42

PRESSURE DISTRIBUTION (PSI) FOR PAD NUMBER 4

I =	13	14	15	16	17	18
AXIAL LENGTH IN.	2.950	3.000	3.050	3.100	3.200	3.300
J DEG.						
1 270.0	164.	166.	169.	171.	175.	179.
2 275.0	165.	167.	169.	171.	175.	179.
3 280.0	168.	169.	171.	173.	176.	179.
4 281.0	168.	170.	171.	173.	176.	179.
5 282.0	169.	170.	171.	173.	176.	179.
6 283.0	169.	170.	171.	173.	176.	179.
7 284.0	169.	170.	171.	172.	176.	179.
8 285.0	170.	170.	170.	172.	176.	179.
9 286.0	170.	170.	170.	172.	176.	179.
10 287.0	170.	170.	170.	172.	176.	179.
11 288.0	170.	170.	170.	172.	175.	179.
12 289.0	170.	170.	170.	172.	175.	179.
13 290.0	170.	170.	170.	172.	175.	179.
14 295.0	170.	170.	170.	172.	175.	179.
15 300.0	170.	170.	170.	171.	175.	179.
16 305.0	170.	170.	170.	171.	175.	179.
17 310.0	170.	170.	170.	171.	175.	179.
18 315.0	170.	170.	170.	171.	175.	179.
19 320.0	170.	170.	170.	171.	175.	179.
20 325.0	170.	170.	170.	171.	175.	179.
21 330.0	170.	170.	170.	171.	175.	179.
22 335.0	170.	170.	170.	172.	175.	179.
23 340.0	170.	170.	170.	172.	175.	179.
24 341.0	170.	170.	170.	172.	175.	179.
25 342.0	170.	170.	170.	172.	175.	179.
26 343.0	170.	170.	170.	172.	176.	179.
27 344.0	170.	170.	170.	172.	176.	179.
28 345.0	170.	170.	170.	172.	176.	179.
29 346.0	169.	170.	171.	172.	176.	179.
30 347.0	169.	170.	171.	173.	176.	179.
31 348.0	169.	170.	171.	173.	176.	179.
32 349.0	168.	170.	171.	173.	176.	179.
33 350.0	168.	169.	171.	173.	176.	179.
34 355.0	165.	167.	169.	171.	175.	179.
35 360.0	164.	166.	169.	171.	175.	179.

Figure 5-20 (Cont.)

PRESSURE DISTRIBUTION (PSI) FOR PAD NUMBER 4

I =		19	20	21	22	23	24
AXIAL LENGTH IN.		3.400	3.500	3.600	3.700	3.800	3.900
J	DEG.						
1	270.0	182.	186.	189.	192.	195.	197.
2	275.0	182.	186.	189.	192.	195.	197.
3	280.0	183.	186.	189.	192.	195.	197.
4	281.0	183.	186.	189.	192.	195.	197.
5	282.0	183.	186.	189.	192.	195.	197.
6	283.0	183.	186.	189.	192.	195.	197.
7	284.0	183.	186.	189.	192.	195.	197.
8	285.0	183.	186.	189.	192.	195.	197.
9	286.0	183.	186.	189.	192.	195.	197.
10	287.0	183.	186.	189.	192.	195.	197.
11	288.0	182.	186.	189.	192.	195.	197.
12	289.0	182.	186.	189.	192.	195.	197.
13	290.0	182.	186.	189.	192.	195.	197.
14	295.0	182.	186.	189.	192.	195.	197.
15	300.0	182.	186.	189.	192.	195.	197.
16	305.0	182.	186.	189.	192.	195.	197.
17	310.0	182.	186.	189.	192.	195.	197.
18	315.0	182.	186.	189.	192.	195.	197.
19	320.0	182.	186.	189.	192.	195.	197.
20	325.0	182.	186.	189.	192.	195.	197.
21	330.0	182.	186.	189.	192.	195.	197.
22	335.0	182.	186.	189.	192.	195.	197.
23	340.0	182.	186.	189.	192.	195.	197.
24	341.0	182.	186.	189.	192.	195.	197.
25	342.0	182.	186.	189.	192.	195.	197.
26	343.0	183.	186.	189.	192.	195.	197.
27	344.0	183.	186.	189.	192.	195.	197.
28	345.0	183.	186.	189.	192.	195.	197.
29	346.0	183.	186.	189.	192.	195.	197.
30	347.0	183.	186.	189.	192.	195.	197.
31	348.0	183.	186.	189.	192.	195.	197.
32	349.0	183.	186.	189.	192.	195.	197.
33	350.0	183.	186.	189.	192.	195.	197.
34	355.0	182.	186.	189.	192.	195.	197.
35	360.0	182.	186.	189.	192.	195.	197.

PRESSURE DISTRIBUTION (PSI) FOR PAD NUMBER 4

I =		25
AXIAL LENGTH IN.		4.000
J	DEG.	
1	270.0	200.
2	275.0	200.
3	280.0	200.
4	281.0	200.
5	282.0	200.
6	283.0	200.
7	284.0	200.
8	285.0	200.
9	286.0	200.
10	287.0	200.
11	288.0	200.
12	289.0	200.
13	290.0	200.
14	295.0	200.
15	300.0	200.
16	305.0	200.
17	310.0	200.
18	315.0	200.
19	320.0	200.
20	325.0	200.
21	330.0	200.
22	335.0	200.
23	340.0	200.
24	341.0	200.
25	342.0	200.
26	343.0	200.
27	344.0	200.
28	345.0	200.
29	346.0	200.
30	347.0	200.
31	348.0	200.
32	349.0	200.
33	350.0	200.
34	355.0	200.
35	360.0	200.

MIN. PRESS= 0.00000E+00 AT 360.00 DEGREES

MAX. PRESS= 200.00 AT 360.00 DEGREES

RECESS SEAL, 4 PADS, JOINED BOUNDARIES
GFACE

-JOURNAL POSITION & FORCES

MINIMUM CLEARANCE = 0.000500 IN
LOAD CAPACITY = 6265. LB
MOMENT ABOUT X-X = -0.1671E-11 IN-LB
MOMENT ABOUT Y-Y = 0.1755E-10 IN-LB

POWER LOSS = 0.0000E+00 HP

LEAKAGE AT INNER = -0.8789E-03 LB/S
LEAKAGE AT OUTER = -0.2676E-03 LB/S

-STIFFNESS COEFFICIENTS
PRINCIPAL Z KZZ = 0.3003E+07 LB/IN
CROSS-COUPLED KZA = 79.95 LB/RAD

Figure 5-20 (Cont.)

```
    CROSS-COUPLED     KZB =   79.95      LB/RAD
    CROSS-COUPLED     KAZ =  0.0000E+00 IN-LB/IN
    PRINCIPAL  A      KAA =  0.5166E+07 IN-LB/RAD
    CROSS-COUPLED     KAB =  0.7280      IN-LB/RAD
    CROSS-COUPLED     KBZ =  0.8356E-08 IN-LB/IN
    CROSS-COUPLED     KBA = -0.7280      IN-LB/RAD
    PRINCIPAL  B      KBB =  0.5166E+07 IN-LB/RAD

  -DAMPING COEFFICIENTS
    PRINCIPAL  Z      DZZ = -0.1258E+05 LB-S/IN
    CROSS-COUPLED     DZA =  -4.179      LB-S/RAD
    CROSS-COUPLED     DZB =  -4.179      LB-S/RAD
    CROSS-COUPLED     DAZ = -0.3567E-11 IN-LB-S/IN
    PRINCIPAL  A      DAA = -0.1744E+05 IN-LB-S/RAD
    CROSS-COUPLED     DAB =  -814.4      IN-LB-S/RAD
    CROSS-COUPLED     DBZ = -0.1724E-13 IN-LB-S/IN
    CROSS-COUPLED     DBA =   814.4      IN-LB-S/RAD
    PRINCIPAL  B      DBB = -0.1744E+05 IN-LB-S/RAD

RECESS SEAL, 4 PADS, JOINED BOUNDARIES
  GFACE

  ECHO OF INPUT


 NO MORE INPUT, PROGRAM TERMINATED
```

Figure 5-20 (Cont.)

```
XAMPLE4
HYDROSTATIC SOURCE SEAL
*
NPAD          1
JOINED
OPTION        1.
*
STIFFNESS     .0001
VGRIDM        23
2.0 2.1 2.2 2.3 2.39 2.4 2.41 2.5 2.6 2.7 2.8 2.9 3.0 3.1 3.2
3.3 3.4 3.5 3.6 3.7 3.8 3.9 4.0
VGRIDN        145.
0.0 0.01 5.0 9.99 10.0 10.01 15.0 19.99 20.0 20.01 25.0 29.99 30.0 30.01
35.0 39.99 40.0 40.01 45.0 49.99 50.0 50.01 55.0 59.99 60.0 60.01  65.0
69.99  70.0 70.01 75.0 79.99 80.0 80.01 85 89.99 90.0 90.01 95.0 99.99
100.0 100.01 105.0 109.99 110.0 110.01 115.0 119.99 120.0 120.01 125.0
129.99 130.0 130.01 135.0 139.99 140.0 140.01 145.0 149.99 150.0 150.01
155.0 159.99 160.0 160.01 165.0 169.99 170.0 170.01 175.0 179.99 180.0
180.01 185.0 189.99 190.0 190.01 195.0 199.99 200.0 200.01 205.0 209.99
210.0 210.01 215.0 219.99 220.0 220.01 225.0 229.99 230.0 230.01 235.0
239.99 240.0 240.01 245.0 249.99 250.0 250.01 255.0 259.99 260.0 260.01
265.0 269.99 270.0 270.01 275.0 279.99 280.0 280.01 285.0 289.99 290.0
290.01 295.0 299.99 300.0 300.01 305.0 309.99 310.0 310.01 315.0 319.99
320.0 320.01 325.0 329.99 330.0 330.01 335.0 339.99 340.0 340.01 345.0
349.99 350.0 350.01 355.0 359.99 360.0
*
CLEARANCE     0.0005
SOURCE        37
   6 1
   6 5
   6 9
   6 13
   6 17
   6 21
   6 25
   6 29
   6 33
   6 37
   6 41
   6 45
   6 49
   6 53
   6 57
   6 61
   6 65
   6 69
   6 73
   6 77
   6 81
   6 85
   6 89
   6 93
   6 97
   6 101
   6 105
   6 109
   6 113
   6 117
   6 121
   6 125
   6 129
   6 133
   6 137
   6 141
   6 145
DO            .010
```



```
PS            200.
SPHEAT        1.4
GASCONST      2.469E5
ABSTEMP       1460.
VISCOSITY     0.535E-8
TOLERA         0.001
SPEED         0.0
PO             14.7
PLEFT           0.
PRITE           0.
PTOP            200.
PBOT            0.
END
```

Figure 5-21 Sample Problem 6, Inherently Compensated Seal, Input File

```
06/15/1993  15:54        Filename: XAMPLE4.OUT                          Page   1


HYDROSTATIC SOURCE SEAL
  GFACE

  ECHO OF INPUT

  *
  NPAD      =    1          NUMBER OF PADS
  JOINED BOUNDARY
  OPTION    =    1          GIVEN CLEARANCE FIND LOAD CAPACITY
  *
  ISTIF     =    1          STIFFNESS CALCULATION
  EXCITATION SPEED, RPM  =       0.0001
  GRIDM     =   23          GRID POINTS IN RADIAL DIRECTION
  VARIABLE GRID IN AXIAL DIRECTION
     2.000       2.100       2.200       2.300       2.390
     2.400       2.410       2.500       2.600       2.700
     2.800       2.900       3.000       3.100       3.200
     3.300       3.400       3.500       3.600       3.700
     3.800       3.900       4.000
  GRIDN     =  145          GRID POINTS IN CIRCUMFERENTIAL DIRECTION
  VARIABLE GRID IN CIRCUMFERENTIAL DIRECTION
    0.0000E+00  0.1000E-01   5.000       9.990       10.00
     10.01       15.00       19.99       20.00       20.01
     25.00       29.99       30.00       30.01       35.00
     39.99       40.00       40.01       45.00       49.99
     50.00       50.01       55.00       59.99       60.00
     60.01       65.00       69.99       70.00       70.01
     75.00       79.99       80.00       80.01       85.00
     89.99       90.00       90.01       95.00       99.99
     100.0       100.0       105.0       110.0       110.0
     110.0       115.0       120.0       120.0       120.0
     125.0       130.0       130.0       130.0       135.0
     140.0       140.0       140.0       145.0       150.0
     150.0       150.0       155.0       160.0       160.0
     160.0       165.0       170.0       170.0       170.0
     175.0       180.0       180.0       180.0       185.0
     190.0       190.0       190.0       195.0       200.0
     200.0       200.0       205.0       210.0       210.0
     210.0       215.0       220.0       220.0       220.0
     225.0       230.0       230.0       230.0       235.0
     240.0       240.0       240.0       245.0       250.0
     250.0       250.0       255.0       260.0       260.0
     260.0       265.0       270.0       270.0       270.0
     275.0       280.0       280.0       280.0       285.0
     290.0       290.0       290.0       295.0       300.0
     300.0       300.0       305.0       310.0       310.0
     310.0       315.0       320.0       320.0       320.0
     325.0       330.0       330.0       330.0       335.0
     340.0       340.0       340.0       345.0       350.0
     350.0       350.0       355.0       360.0       360.0
  *
  CLEARANCE =  0.000500     BEARING CLEARANCE
  INHERENTLY COMPENSATED ORIFICES
  NUMBER OF SOURCES =  37
  SPECIFIED SOURCE AT I =   6  J =   1
  SPECIFIED SOURCE AT I =   6  J =   5
  SPECIFIED SOURCE AT I =   6  J =   9
  SPECIFIED SOURCE AT I =   6  J =  13
  SPECIFIED SOURCE AT I =   6  J =  17
  SPECIFIED SOURCE AT I =   6  J =  21
  SPECIFIED SOURCE AT I =   6  J =  25
  SPECIFIED SOURCE AT I =   6  J =  29
  SPECIFIED SOURCE AT I =   6  J =  33
  SPECIFIED SOURCE AT I =   6  J =  37
```

```
06/15/1993  15:54        Filename: XAMPLE4.OUT                          Page   2

  SPECIFIED SOURCE AT I =   6  J =  41
  SPECIFIED SOURCE AT I =   6  J =  45
  SPECIFIED SOURCE AT I =   6  J =  49
  SPECIFIED SOURCE AT I =   6  J =  53
  SPECIFIED SOURCE AT I =   6  J =  57
  SPECIFIED SOURCE AT I =   6  J =  61
  SPECIFIED SOURCE AT I =   6  J =  65
  SPECIFIED SOURCE AT I =   6  J =  69
  SPECIFIED SOURCE AT I =   6  J =  73
  SPECIFIED SOURCE AT I =   6  J =  77
  SPECIFIED SOURCE AT I =   6  J =  81
  SPECIFIED SOURCE AT I =   6  J =  85
  SPECIFIED SOURCE AT I =   6  J =  89
  SPECIFIED SOURCE AT I =   6  J =  93
  SPECIFIED SOURCE AT I =   6  J =  97
  SPECIFIED SOURCE AT I =   6  J = 101
  SPECIFIED SOURCE AT I =   6  J = 105
  SPECIFIED SOURCE AT I =   6  J = 109
  SPECIFIED SOURCE AT I =   6  J = 113
  SPECIFIED SOURCE AT I =   6  J = 117
  SPECIFIED SOURCE AT I =   6  J = 121
  SPECIFIED SOURCE AT I =   6  J = 125
  SPECIFIED SOURCE AT I =   6  J = 129
  SPECIFIED SOURCE AT I =   6  J = 133
  SPECIFIED SOURCE AT I =   6  J = 137
  SPECIFIED SOURCE AT I =   6  J = 141
  SPECIFIED SOURCE AT I =   6  J = 145
  DO         =    0.0100      ORIFICE DIAMETER
  PS         =    200.00      SUPPLY PRESSURE(ORIFICE)
  SPECIFIC   =    1.4000      SPECIFIC HEAT RATIO
  GAS CONST  =  246900.0       GAS CONSTANT
  ABS TEMP   =   1460.00       ABSOLUTE TEMPERATURE
  VISCOSITY  =  0.5350E-08     ABSOLUTE VISCOSITY
  TOL1       =    0.0010      TOLERANCE(COMPRESSIBILITY)
  TOL2       =    0.0000      ITERATION(OPTION 2)
  SPEED      =      0.00      ROTATIONAL SPEED IN RPM
  PO         =     14.70      REFERENCE(AMBIENT)  PRESSURE
  PLEFT      =      0.00      GAGE PRESSURE AT LEFT BOUNDARY
  PRITE      =      0.00      GAGE PRESSURE AT RIGHT BOUNDARY
  PTOP       =    200.00      GAGE PRESSURE AT TOP BOUNDARY
  PBOT       =      0.00      GAGE PRESSURE AT BOTTOM BOUNDARY

HYDROSTATIC SOURCE SEAL
  GFACE

  GAS THRUST BEARING/SEAL


  -BEARING GEOMETRY
   NUMBER OF PADS =     1
   OUTER DIAMETER =     8.000 IN
   INNER DIAMETER =     4.000 IN
        CLEARANCE =  0.000500 IN
   STARTING ANGLE =      0.00 DEG
        PAD ANGLE =    360.00 DEG

  -LUBRICANT PROPERTIES
                 VISCOSITY =  0.5350000E-08 LB-S/IN**2
              GAS CONSTANT =   246900.0     IN**2/S**2-R
        ABS. TEMPERATURE =   1460.000     DEG R

  -ORIFICE RELATED PROPERTIES
   ORIFICE
                  DIAMETER =  0.1000000E-01 IN
            DISCHARGE COEF =  0.9000000
```

Figure 5-22 Sample Problem 6, Inherently Compensated Seal, Output File

```
        SUPPLY PRESSURE =   200.0000     PSI

    SPECIFIC HEAT RATIO =   1.400000

 ***INHERENTLY COMPENSATED

 -BOUNDARY CONDITIONS
     REFERENCE P =   14.70000     PSI
           PLEFT =  0.0000000E+00 PSI
           PRITE =  0.0000000E+00 PSI
            PTOP =   200.0000     PSI
            PBOT =  0.0000000E+00 PSI
           SPEED =  0.0000000E+00 RPM

 -BEARING MODEL
               M =   23
               N =  145
          JOINED =    T

  DZ
  0.250E-01 0.250E-01 0.250E-01 0.225E-01 0.250E-02
  0.250E-02 0.225E-01 0.250E-01 0.250E-01 0.250E-01
  0.250E-01 0.250E-01 0.250E-01 0.250E-01 0.250E-01
  0.250E-01 0.250E-01 0.250E-01 0.250E-01 0.250E-01
  0.250E-01 0.250E-01 0.250E-01

  DTHETA
  0.175E-03 0.871E-01 0.871E-01 0.175E-03 0.175E-03
  0.871E-01 0.871E-01 0.175E-03 0.175E-03 0.871E-01
  0.871E-01 0.175E-03 0.175E-03 0.871E-01 0.871E-01
  0.175E-03 0.175E-03 0.871E-01 0.871E-01 0.175E-03
  0.175E-03 0.871E-01 0.871E-01 0.175E-03 0.175E-03
  0.871E-01 0.871E-01 0.175E-03 0.175E-03 0.871E-01
  0.871E-01 0.175E-03 0.175E-03 0.871E-01 0.871E-01
  0.175E-03 0.175E-03 0.871E-01 0.871E-01 0.175E-03
  0.175E-03 0.871E-01 0.871E-01 0.175E-03 0.175E-03
  0.871E-01 0.871E-01 0.175E-03 0.175E-03 0.871E-01
  0.871E-01 0.175E-03 0.175E-03 0.871E-01 0.871E-01
  0.175E-03 0.175E-03 0.871E-01 0.871E-01 0.175E-03
  0.175E-03 0.871E-01 0.871E-01 0.175E-03 0.175E-03
  0.871E-01 0.871E-01 0.175E-03 0.175E-03 0.871E-01
  0.871E-01 0.175E-03 0.175E-03 0.871E-01 0.871E-01
  0.175E-03 0.175E-03 0.871E-01 0.871E-01 0.175E-03
  0.175E-03 0.871E-01 0.871E-01 0.175E-03 0.175E-03
  0.871E-01 0.871E-01 0.175E-03 0.175E-03 0.871E-01
  0.871E-01 0.175E-03 0.175E-03 0.871E-01 0.871E-01
  0.175E-03 0.175E-03 0.871E-01 0.871E-01 0.175E-03
  0.175E-03 0.871E-01 0.871E-01 0.175E-03 0.175E-03
  0.871E-01 0.871E-01 0.175E-03 0.175E-03 0.871E-01
  0.871E-01 0.175E-03 0.175E-03 0.871E-01 0.871E-01
  0.175E-03 0.175E-03 0.871E-01 0.871E-01 0.175E-03
  0.175E-03 0.871E-01 0.871E-01 0.175E-03 0.175E-03

HYDROSTATIC SOURCE SEAL
  GFACE

  -MAXIMUM NUMBER OF ITERATIONS
     MXIT1 =   10       (FOR COMPRESSIBILITY)
     MXIT2 =    5       (FOR OPTION 2)

  -TOLERANCE
```



```
     TOL1 =   0.00100  (FOR COMPRESSIBILITY)
     TOL2 =   0.01000  (FOR OPTION 2)

  -OPTION  =    1       GIVEN CLEARANCE  FIND LOAD CAPACITY

HYDROSTATIC SOURCE SEAL
  GFACE

  SPECIFIED SOURCE
     1  F  F  F  F  F  T  F  F  F  F  F  F  F  F  F  F  F  F  F  F  F  F
     2  F  F  F  F  F  F  F  F  F  F  F  F  F  F  F  F  F  F  F  F  F  F
     3  F  F  F  F  F  F  F  F  F  F  F  F  F  F  F  F  F  F  F  F  F  F
     4  F  F  F  F  F  F  F  F  F  F  F  F  F  F  F  F  F  F  F  F  F  F
     5  F  F  F  F  F  T  F  F  F  F  F  F  F  F  F  F  F  F  F  F  F  F
     6  F  F  F  F  F  F  F  F  F  F  F  F  F  F  F  F  F  F  F  F  F  F
     7  F  F  F  F  F  F  F  F  F  F  F  F  F  F  F  F  F  F  F  F  F  F
     8  F  F  F  F  F  F  F  F  F  F  F  F  F  F  F  F  F  F  F  F  F  F
     9  F  F  F  F  F  T  F  F  F  F  F  F  F  F  F  F  F  F  F  F  F  F
    10  F  F  F  F  F  F  F  F  F  F  F  F  F  F  F  F  F  F  F  F  F  F
    11  F  F  F  F  F  F  F  F  F  F  F  F  F  F  F  F  F  F  F  F  F  F
    12  F  F  F  F  F  F  F  F  F  F  F  F  F  F  F  F  F  F  F  F  F  F
    13  F  F  F  F  F  T  F  F  F  F  F  F  F  F  F  F  F  F  F  F  F  F
    14  F  F  F  F  F  F  F  F  F  F  F  F  F  F  F  F  F  F  F  F  F  F
    15  F  F  F  F  F  F  F  F  F  F  F  F  F  F  F  F  F  F  F  F  F  F
    16  F  F  F  F  F  F  F  F  F  F  F  F  F  F  F  F  F  F  F  F  F  F
    17  F  F  F  F  F  T  F  F  F  F  F  F  F  F  F  F  F  F  F  F  F  F
    18  F  F  F  F  F  F  F  F  F  F  F  F  F  F  F  F  F  F  F  F  F  F
    19  F  F  F  F  F  F  F  F  F  F  F  F  F  F  F  F  F  F  F  F  F  F
    20  F  F  F  F  F  F  F  F  F  F  F  F  F  F  F  F  F  F  F  F  F  F
    21  F  F  F  F  F  T  F  F  F  F  F  F  F  F  F  F  F  F  F  F  F  F
    22  F  F  F  F  F  F  F  F  F  F  F  F  F  F  F  F  F  F  F  F  F  F
    23  F  F  F  F  F  F  F  F  F  F  F  F  F  F  F  F  F  F  F  F  F  F
    24  F  F  F  F  F  F  F  F  F  F  F  F  F  F  F  F  F  F  F  F  F  F
    25  F  F  F  F  F  T  F  F  F  F  F  F  F  F  F  F  F  F  F  F  F  F
    26  F  F  F  F  F  F  F  F  F  F  F  F  F  F  F  F  F  F  F  F  F  F
    27  F  F  F  F  F  F  F  F  F  F  F  F  F  F  F  F  F  F  F  F  F  F
    28  F  F  F  F  F  F  F  F  F  F  F  F  F  F  F  F  F  F  F  F  F  F
    29  F  F  F  F  F  T  F  F  F  F  F  F  F  F  F  F  F  F  F  F  F  F
    30  F  F  F  F  F  F  F  F  F  F  F  F  F  F  F  F  F  F  F  F  F  F
    31  F  F  F  F  F  F  F  F  F  F  F  F  F  F  F  F  F  F  F  F  F  F
    32  F  F  F  F  F  F  F  F  F  F  F  F  F  F  F  F  F  F  F  F  F  F
    33  F  F  F  F  F  T  F  F  F  F  F  F  F  F  F  F  F  F  F  F  F  F
    34  F  F  F  F  F  F  F  F  F  F  F  F  F  F  F  F  F  F  F  F  F  F
    35  F  F  F  F  F  F  F  F  F  F  F  F  F  F  F  F  F  F  F  F  F  F
    36  F  F  F  F  F  F  F  F  F  F  F  F  F  F  F  F  F  F  F  F  F  F
    37  F  F  F  F  F  T  F  F  F  F  F  F  F  F  F  F  F  F  F  F  F  F
    38  F  F  F  F  F  F  F  F  F  F  F  F  F  F  F  F  F  F  F  F  F  F
    39  F  F  F  F  F  F  F  F  F  F  F  F  F  F  F  F  F  F  F  F  F  F
    40  F  F  F  F  F  F  F  F  F  F  F  F  F  F  F  F  F  F  F  F  F  F
    41  F  F  F  F  F  T  F  F  F  F  F  F  F  F  F  F  F  F  F  F  F  F
    42  F  F  F  F  F  F  F  F  F  F  F  F  F  F  F  F  F  F  F  F  F  F
    43  F  F  F  F  F  F  F  F  F  F  F  F  F  F  F  F  F  F  F  F  F  F
    44  F  F  F  F  F  F  F  F  F  F  F  F  F  F  F  F  F  F  F  F  F  F
    45  F  F  F  F  F  T  F  F  F  F  F  F  F  F  F  F  F  F  F  F  F  F
    46  F  F  F  F  F  F  F  F  F  F  F  F  F  F  F  F  F  F  F  F  F  F
    47  F  F  F  F  F  F  F  F  F  F  F  F  F  F  F  F  F  F  F  F  F  F
    48  F  F  F  F  F  F  F  F  F  F  F  F  F  F  F  F  F  F  F  F  F  F
    49  F  F  F  F  F  T  F  F  F  F  F  F  F  F  F  F  F  F  F  F  F  F
    50  F  F  F  F  F  F  F  F  F  F  F  F  F  F  F  F  F  F  F  F  F  F
    51  F  F  F  F  F  F  F  F  F  F  F  F  F  F  F  F  F  F  F  F  F  F
    52  F  F  F  F  F  F  F  F  F  F  F  F  F  F  F  F  F  F  F  F  F  F
    53  F  F  F  F  F  T  F  F  F  F  F  F  F  F  F  F  F  F  F  F  F  F
    54  F  F  F  F  F  F  F  F  F  F  F  F  F  F  F  F  F  F  F  F  F  F
    55  F  F  F  F  F  F  F  F  F  F  F  F  F  F  F  F  F  F  F  F  F  F
```

Figure 5-22 (Cont.)

56	F	F	F	F	F	F	F	F	F	F	F	F	F	F	F	F	F	F	F	F	F	F
57	F	F	F	F	F	T	F	F	F	F	F	F	F	F	F	F	F	F	F	F	F	F
58	F	F	F	F	F	F	F	F	F	F	F	F	F	F	F	F	F	F	F	F	F	F
59	F	F	F	F	F	F	F	F	F	F	F	F	F	F	F	F	F	F	F	F	F	F
60	F	F	F	F	F	F	F	F	F	F	F	F	F	F	F	F	F	F	F	F	F	F
61	F	F	F	F	F	T	F	F	F	F	F	F	F	F	F	F	F	F	F	F	F	F
62	F	F	F	F	F	F	F	F	F	F	F	F	F	F	F	F	F	F	F	F	F	F
63	F	F	F	F	F	F	F	F	F	F	F	F	F	F	F	F	F	F	F	F	F	F
64	F	F	F	F	F	F	F	F	F	F	F	F	F	F	F	F	F	F	F	F	F	F
65	F	F	F	F	F	T	F	F	F	F	F	F	F	F	F	F	F	F	F	F	F	F
66	F	F	F	F	F	F	F	F	F	F	F	F	F	F	F	F	F	F	F	F	F	F
67	F	F	F	F	F	F	F	F	F	F	F	F	F	F	F	F	F	F	F	F	F	F
68	F	F	F	F	F	F	F	F	F	F	F	F	F	F	F	F	F	F	F	F	F	F
69	F	F	F	F	F	T	F	F	F	F	F	F	F	F	F	F	F	F	F	F	F	F
70	F	F	F	F	F	F	F	F	F	F	F	F	F	F	F	F	F	F	F	F	F	F
71	F	F	F	F	F	F	F	F	F	F	F	F	F	F	F	F	F	F	F	F	F	F
72	F	F	F	F	F	F	F	F	F	F	F	F	F	F	F	F	F	F	F	F	F	F
73	F	F	F	F	F	T	F	F	F	F	F	F	F	F	F	F	F	F	F	F	F	F
74	F	F	F	F	F	F	F	F	F	F	F	F	F	F	F	F	F	F	F	F	F	F
75	F	F	F	F	F	F	F	F	F	F	F	F	F	F	F	F	F	F	F	F	F	F
76	F	F	F	F	F	F	F	F	F	F	F	F	F	F	F	F	F	F	F	F	F	F
77	F	F	F	F	F	T	F	F	F	F	F	F	F	F	F	F	F	F	F	F	F	F
78	F	F	F	F	F	F	F	F	F	F	F	F	F	F	F	F	F	F	F	F	F	F
79	F	F	F	F	F	F	F	F	F	F	F	F	F	F	F	F	F	F	F	F	F	F
80	F	F	F	F	F	F	F	F	F	F	F	F	F	F	F	F	F	F	F	F	F	F
81	F	F	F	F	F	T	F	F	F	F	F	F	F	F	F	F	F	F	F	F	F	F
82	F	F	F	F	F	F	F	F	F	F	F	F	F	F	F	F	F	F	F	F	F	F
83	F	F	F	F	F	F	F	F	F	F	F	F	F	F	F	F	F	F	F	F	F	F
84	F	F	F	F	F	F	F	F	F	F	F	F	F	F	F	F	F	F	F	F	F	F
85	F	F	F	F	F	T	F	F	F	F	F	F	F	F	F	F	F	F	F	F	F	F
86	F	F	F	F	F	F	F	F	F	F	F	F	F	F	F	F	F	F	F	F	F	F
87	F	F	F	F	F	F	F	F	F	F	F	F	F	F	F	F	F	F	F	F	F	F
88	F	F	F	F	F	F	F	F	F	F	F	F	F	F	F	F	F	F	F	F	F	F
89	F	F	F	F	F	T	F	F	F	F	F	F	F	F	F	F	F	F	F	F	F	F
90	F	F	F	F	F	F	F	F	F	F	F	F	F	F	F	F	F	F	F	F	F	F
91	F	F	F	F	F	F	F	F	F	F	F	F	F	F	F	F	F	F	F	F	F	F
92	F	F	F	F	F	F	F	F	F	F	F	F	F	F	F	F	F	F	F	F	F	F
93	F	F	F	F	F	T	F	F	F	F	F	F	F	F	F	F	F	F	F	F	F	F
94	F	F	F	F	F	F	F	F	F	F	F	F	F	F	F	F	F	F	F	F	F	F
95	F	F	F	F	F	F	F	F	F	F	F	F	F	F	F	F	F	F	F	F	F	F
96	F	F	F	F	F	F	F	F	F	F	F	F	F	F	F	F	F	F	F	F	F	F
97	F	F	F	F	F	T	F	F	F	F	F	F	F	F	F	F	F	F	F	F	F	F
98	F	F	F	F	F	F	F	F	F	F	F	F	F	F	F	F	F	F	F	F	F	F
99	F	F	F	F	F	F	F	F	F	F	F	F	F	F	F	F	F	F	F	F	F	F
100	F	F	F	F	F	F	F	F	F	F	F	F	F	F	F	F	F	F	F	F	F	F
101	F	F	F	F	F	T	F	F	F	F	F	F	F	F	F	F	F	F	F	F	F	F
102	F	F	F	F	F	F	F	F	F	F	F	F	F	F	F	F	F	F	F	F	F	F
103	F	F	F	F	F	F	F	F	F	F	F	F	F	F	F	F	F	F	F	F	F	F
104	F	F	F	F	F	F	F	F	F	F	F	F	F	F	F	F	F	F	F	F	F	F
105	F	F	F	F	F	T	F	F	F	F	F	F	F	F	F	F	F	F	F	F	F	F
106	F	F	F	F	F	F	F	F	F	F	F	F	F	F	F	F	F	F	F	F	F	F
107	F	F	F	F	F	F	F	F	F	F	F	F	F	F	F	F	F	F	F	F	F	F
108	F	F	F	F	F	F	F	F	F	F	F	F	F	F	F	F	F	F	F	F	F	F
109	F	F	F	F	F	T	F	F	F	F	F	F	F	F	F	F	F	F	F	F	F	F
110	F	F	F	F	F	F	F	F	F	F	F	F	F	F	F	F	F	F	F	F	F	F
111	F	F	F	F	F	F	F	F	F	F	F	F	F	F	F	F	F	F	F	F	F	F
112	F	F	F	F	F	F	F	F	F	F	F	F	F	F	F	F	F	F	F	F	F	F
113	F	F	F	F	F	T	F	F	F	F	F	F	F	F	F	F	F	F	F	F	F	F
114	F	F	F	F	F	F	F	F	F	F	F	F	F	F	F	F	F	F	F	F	F	F
115	F	F	F	F	F	F	F	F	F	F	F	F	F	F	F	F	F	F	F	F	F	F
116	F	F	F	F	F	F	F	F	F	F	F	F	F	F	F	F	F	F	F	F	F	F
117	F	F	F	F	F	T	F	F	F	F	F	F	F	F	F	F	F	F	F	F	F	F
118	F	F	F	F	F	F	F	F	F	F	F	F	F	F	F	F	F	F	F	F	F	F
119	F	F	F	F	F	F	F	F	F	F	F	F	F	F	F	F	F	F	F	F	F	F
120	F	F	F	F	F	F	F	F	F	F	F	F	F	F	F	F	F	F	F	F	F	F
121	F	F	F	F	F	T	F	F	F	F	F	F	F	F	F	F	F	F	F	F	F	F

122	F	F	F	F	F	F	F	F	F	F	F	F	F	F	F	F	F	F	F	F	F	F
123	F	F	F	F	F	F	F	F	F	F	F	F	F	F	F	F	F	F	F	F	F	F
124	F	F	F	F	F	F	F	F	F	F	F	F	F	F	F	F	F	F	F	F	F	F
125	F	F	F	F	F	T	F	F	F	F	F	F	F	F	F	F	F	F	F	F	F	F
126	F	F	F	F	F	F	F	F	F	F	F	F	F	F	F	F	F	F	F	F	F	F
127	F	F	F	F	F	F	F	F	F	F	F	F	F	F	F	F	F	F	F	F	F	F
128	F	F	F	F	F	F	F	F	F	F	F	F	F	F	F	F	F	F	F	F	F	F
129	F	F	F	F	F	T	F	F	F	F	F	F	F	F	F	F	F	F	F	F	F	F
130	F	F	F	F	F	F	F	F	F	F	F	F	F	F	F	F	F	F	F	F	F	F
131	F	F	F	F	F	F	F	F	F	F	F	F	F	F	F	F	F	F	F	F	F	F
132	F	F	F	F	F	F	F	F	F	F	F	F	F	F	F	F	F	F	F	F	F	F
133	F	F	F	F	F	T	F	F	F	F	F	F	F	F	F	F	F	F	F	F	F	F
134	F	F	F	F	F	F	F	F	F	F	F	F	F	F	F	F	F	F	F	F	F	F
135	F	F	F	F	F	F	F	F	F	F	F	F	F	F	F	F	F	F	F	F	F	F
136	F	F	F	F	F	F	F	F	F	F	F	F	F	F	F	F	F	F	F	F	F	F
137	F	F	F	F	F	T	F	F	F	F	F	F	F	F	F	F	F	F	F	F	F	F
138	F	F	F	F	F	F	F	F	F	F	F	F	F	F	F	F	F	F	F	F	F	F
139	F	F	F	F	F	F	F	F	F	F	F	F	F	F	F	F	F	F	F	F	F	F
140	F	F	F	F	F	F	F	F	F	F	F	F	F	F	F	F	F	F	F	F	F	F
141	F	F	F	F	F	T	F	F	F	F	F	F	F	F	F	F	F	F	F	F	F	F
142	F	F	F	F	F	F	F	F	F	F	F	F	F	F	F	F	F	F	F	F	F	F
143	F	F	F	F	F	F	F	F	F	F	F	F	F	F	F	F	F	F	F	F	F	F
144	F	F	F	F	F	F	F	F	F	F	F	F	F	F	F	F	F	F	F	F	F	F
145	F	F	F	F	F	T	F	F	F	F	F	F	F	F	F	F	F	F	F	F	F	F

SOURCE CORRECTION FACTOR 0.00000E+00

Figure 5-22 (Cont.)

NON-DIM CLEARANCE DISTRIBUTION(H/C) FOR PAD NUMBER 1

	I =	1	2	3	4	5	6
	AXIAL LENGTH IN.	2.000	2.100	2.200	2.300	2.390	2.400
J	DEG.						
1	0.0	1.00	1.00	1.00	1.00	1.00	1.00
2	0.0	1.00	1.00	1.00	1.00	1.00	1.00
3	5.0	1.00	1.00	1.00	1.00	1.00	1.00
4	10.0	1.00	1.00	1.00	1.00	1.00	1.00
5	10.0	1.00	1.00	1.00	1.00	1.00	1.00
6	10.0	1.00	1.00	1.00	1.00	1.00	1.00
7	15.0	1.00	1.00	1.00	1.00	1.00	1.00
8	20.0	1.00	1.00	1.00	1.00	1.00	1.00
9	20.0	1.00	1.00	1.00	1.00	1.00	1.00
10	20.0	1.00	1.00	1.00	1.00	1.00	1.00
11	25.0	1.00	1.00	1.00	1.00	1.00	1.00
12	30.0	1.00	1.00	1.00	1.00	1.00	1.00
13	30.0	1.00	1.00	1.00	1.00	1.00	1.00
14	30.0	1.00	1.00	1.00	1.00	1.00	1.00
15	35.0	1.00	1.00	1.00	1.00	1.00	1.00
16	40.0	1.00	1.00	1.00	1.00	1.00	1.00
17	40.0	1.00	1.00	1.00	1.00	1.00	1.00
18	40.0	1.00	1.00	1.00	1.00	1.00	1.00
19	45.0	1.00	1.00	1.00	1.00	1.00	1.00
20	50.0	1.00	1.00	1.00	1.00	1.00	1.00
21	50.0	1.00	1.00	1.00	1.00	1.00	1.00
22	50.0	1.00	1.00	1.00	1.00	1.00	1.00
23	55.0	1.00	1.00	1.00	1.00	1.00	1.00
24	60.0	1.00	1.00	1.00	1.00	1.00	1.00
25	60.0	1.00	1.00	1.00	1.00	1.00	1.00
26	60.0	1.00	1.00	1.00	1.00	1.00	1.00
27	65.0	1.00	1.00	1.00	1.00	1.00	1.00
28	70.0	1.00	1.00	1.00	1.00	1.00	1.00
29	70.0	1.00	1.00	1.00	1.00	1.00	1.00
30	70.0	1.00	1.00	1.00	1.00	1.00	1.00
31	75.0	1.00	1.00	1.00	1.00	1.00	1.00
32	80.0	1.00	1.00	1.00	1.00	1.00	1.00
33	80.0	1.00	1.00	1.00	1.00	1.00	1.00
34	80.0	1.00	1.00	1.00	1.00	1.00	1.00
35	85.0	1.00	1.00	1.00	1.00	1.00	1.00
36	90.0	1.00	1.00	1.00	1.00	1.00	1.00
37	90.0	1.00	1.00	1.00	1.00	1.00	1.00
38	90.0	1.00	1.00	1.00	1.00	1.00	1.00
39	95.0	1.00	1.00	1.00	1.00	1.00	1.00
40	100.0	1.00	1.00	1.00	1.00	1.00	1.00
41	100.0	1.00	1.00	1.00	1.00	1.00	1.00
42	100.0	1.00	1.00	1.00	1.00	1.00	1.00
43	105.0	1.00	1.00	1.00	1.00	1.00	1.00
44	110.0	1.00	1.00	1.00	1.00	1.00	1.00
45	110.0	1.00	1.00	1.00	1.00	1.00	1.00
46	110.0	1.00	1.00	1.00	1.00	1.00	1.00
47	115.0	1.00	1.00	1.00	1.00	1.00	1.00
48	120.0	1.00	1.00	1.00	1.00	1.00	1.00
49	120.0	1.00	1.00	1.00	1.00	1.00	1.00
50	120.0	1.00	1.00	1.00	1.00	1.00	1.00
51	125.0	1.00	1.00	1.00	1.00	1.00	1.00
52	130.0	1.00	1.00	1.00	1.00	1.00	1.00
53	130.0	1.00	1.00	1.00	1.00	1.00	1.00
54	130.0	1.00	1.00	1.00	1.00	1.00	1.00
55	135.0	1.00	1.00	1.00	1.00	1.00	1.00
56	140.0	1.00	1.00	1.00	1.00	1.00	1.00
57	140.0	1.00	1.00	1.00	1.00	1.00	1.00
58	140.0	1.00	1.00	1.00	1.00	1.00	1.00
59	145.0	1.00	1.00	1.00	1.00	1.00	1.00

60	150.0	1.00	1.00	1.00	1.00	1.00	1.00
61	150.0	1.00	1.00	1.00	1.00	1.00	1.00
62	150.0	1.00	1.00	1.00	1.00	1.00	1.00
63	155.0	1.00	1.00	1.00	1.00	1.00	1.00
64	160.0	1.00	1.00	1.00	1.00	1.00	1.00
65	160.0	1.00	1.00	1.00	1.00	1.00	1.00
66	160.0	1.00	1.00	1.00	1.00	1.00	1.00
67	165.0	1.00	1.00	1.00	1.00	1.00	1.00
68	170.0	1.00	1.00	1.00	1.00	1.00	1.00
69	170.0	1.00	1.00	1.00	1.00	1.00	1.00
70	170.0	1.00	1.00	1.00	1.00	1.00	1.00
71	175.0	1.00	1.00	1.00	1.00	1.00	1.00
72	180.0	1.00	1.00	1.00	1.00	1.00	1.00
73	180.0	1.00	1.00	1.00	1.00	1.00	1.00
74	180.0	1.00	1.00	1.00	1.00	1.00	1.00
75	185.0	1.00	1.00	1.00	1.00	1.00	1.00
76	190.0	1.00	1.00	1.00	1.00	1.00	1.00
77	190.0	1.00	1.00	1.00	1.00	1.00	1.00
78	190.0	1.00	1.00	1.00	1.00	1.00	1.00
79	195.0	1.00	1.00	1.00	1.00	1.00	1.00
80	200.0	1.00	1.00	1.00	1.00	1.00	1.00
81	200.0	1.00	1.00	1.00	1.00	1.00	1.00
82	200.0	1.00	1.00	1.00	1.00	1.00	1.00
83	205.0	1.00	1.00	1.00	1.00	1.00	1.00
84	210.0	1.00	1.00	1.00	1.00	1.00	1.00
85	210.0	1.00	1.00	1.00	1.00	1.00	1.00
86	210.0	1.00	1.00	1.00	1.00	1.00	1.00
87	215.0	1.00	1.00	1.00	1.00	1.00	1.00
88	220.0	1.00	1.00	1.00	1.00	1.00	1.00
89	220.0	1.00	1.00	1.00	1.00	1.00	1.00
90	220.0	1.00	1.00	1.00	1.00	1.00	1.00
91	225.0	1.00	1.00	1.00	1.00	1.00	1.00
92	230.0	1.00	1.00	1.00	1.00	1.00	1.00
93	230.0	1.00	1.00	1.00	1.00	1.00	1.00
94	230.0	1.00	1.00	1.00	1.00	1.00	1.00
95	235.0	1.00	1.00	1.00	1.00	1.00	1.00
96	240.0	1.00	1.00	1.00	1.00	1.00	1.00
97	240.0	1.00	1.00	1.00	1.00	1.00	1.00
98	240.0	1.00	1.00	1.00	1.00	1.00	1.00
99	245.0	1.00	1.00	1.00	1.00	1.00	1.00
100	250.0	1.00	1.00	1.00	1.00	1.00	1.00
101	250.0	1.00	1.00	1.00	1.00	1.00	1.00
102	250.0	1.00	1.00	1.00	1.00	1.00	1.00
103	255.0	1.00	1.00	1.00	1.00	1.00	1.00
104	260.0	1.00	1.00	1.00	1.00	1.00	1.00
105	260.0	1.00	1.00	1.00	1.00	1.00	1.00
106	260.0	1.00	1.00	1.00	1.00	1.00	1.00
107	265.0	1.00	1.00	1.00	1.00	1.00	1.00
108	270.0	1.00	1.00	1.00	1.00	1.00	1.00
109	270.0	1.00	1.00	1.00	1.00	1.00	1.00
110	270.0	1.00	1.00	1.00	1.00	1.00	1.00
111	275.0	1.00	1.00	1.00	1.00	1.00	1.00
112	280.0	1.00	1.00	1.00	1.00	1.00	1.00
113	280.0	1.00	1.00	1.00	1.00	1.00	1.00
114	280.0	1.00	1.00	1.00	1.00	1.00	1.00
115	285.0	1.00	1.00	1.00	1.00	1.00	1.00
116	290.0	1.00	1.00	1.00	1.00	1.00	1.00
117	290.0	1.00	1.00	1.00	1.00	1.00	1.00
118	290.0	1.00	1.00	1.00	1.00	1.00	1.00
119	295.0	1.00	1.00	1.00	1.00	1.00	1.00
120	300.0	1.00	1.00	1.00	1.00	1.00	1.00
121	300.0	1.00	1.00	1.00	1.00	1.00	1.00
122	300.0	1.00	1.00	1.00	1.00	1.00	1.00
123	305.0	1.00	1.00	1.00	1.00	1.00	1.00
124	310.0	1.00	1.00	1.00	1.00	1.00	1.00
125	310.0	1.00	1.00	1.00	1.00	1.00	1.00

Figure 5-22 (Cont.)

126	310.0	1.00	1.00	1.00	1.00	1.00	1.00
127	315.0	1.00	1.00	1.00	1.00	1.00	1.00
128	320.0	1.00	1.00	1.00	1.00	1.00	1.00
129	320.0	1.00	1.00	1.00	1.00	1.00	1.00
130	320.0	1.00	1.00	1.00	1.00	1.00	1.00
131	325.0	1.00	1.00	1.00	1.00	1.00	1.00
132	330.0	1.00	1.00	1.00	1.00	1.00	1.00
133	330.0	1.00	1.00	1.00	1.00	1.00	1.00
134	330.0	1.00	1.00	1.00	1.00	1.00	1.00
135	335.0	1.00	1.00	1.00	1.00	1.00	1.00
136	340.0	1.00	1.00	1.00	1.00	1.00	1.00
137	340.0	1.00	1.00	1.00	1.00	1.00	1.00
138	340.0	1.00	1.00	1.00	1.00	1.00	1.00
139	345.0	1.00	1.00	1.00	1.00	1.00	1.00
140	350.0	1.00	1.00	1.00	1.00	1.00	1.00
141	350.0	1.00	1.00	1.00	1.00	1.00	1.00
142	350.0	1.00	1.00	1.00	1.00	1.00	1.00
143	355.0	1.00	1.00	1.00	1.00	1.00	1.00
144	360.0	1.00	1.00	1.00	1.00	1.00	1.00
145	360.0	1.00	1.00	1.00	1.00	1.00	1.00

NON-DIM CLEARANCE DISTRIBUTION(H/C) FOR PAD NUMBER 1

	I =	7	8	9	10	11	12
	AXIAL LENGTH IN.	2.410	2.500	2.600	2.700	2.800	2.900
J	DEG.						
1	0.0	1.00	1.00	1.00	1.00	1.00	1.00
2	0.0	1.00	1.00	1.00	1.00	1.00	1.00
3	5.0	1.00	1.00	1.00	1.00	1.00	1.00
4	10.0	1.00	1.00	1.00	1.00	1.00	1.00
5	10.0	1.00	1.00	1.00	1.00	1.00	1.00
6	10.0	1.00	1.00	1.00	1.00	1.00	1.00
7	15.0	1.00	1.00	1.00	1.00	1.00	1.00
8	20.0	1.00	1.00	1.00	1.00	1.00	1.00
9	20.0	1.00	1.00	1.00	1.00	1.00	1.00
10	20.0	1.00	1.00	1.00	1.00	1.00	1.00
11	25.0	1.00	1.00	1.00	1.00	1.00	1.00
12	30.0	1.00	1.00	1.00	1.00	1.00	1.00
13	30.0	1.00	1.00	1.00	1.00	1.00	1.00
14	30.0	1.00	1.00	1.00	1.00	1.00	1.00
15	35.0	1.00	1.00	1.00	1.00	1.00	1.00
16	40.0	1.00	1.00	1.00	1.00	1.00	1.00
17	40.0	1.00	1.00	1.00	1.00	1.00	1.00
18	40.0	1.00	1.00	1.00	1.00	1.00	1.00
19	45.0	1.00	1.00	1.00	1.00	1.00	1.00
20	50.0	1.00	1.00	1.00	1.00	1.00	1.00
21	50.0	1.00	1.00	1.00	1.00	1.00	1.00
22	50.0	1.00	1.00	1.00	1.00	1.00	1.00
23	55.0	1.00	1.00	1.00	1.00	1.00	1.00
24	60.0	1.00	1.00	1.00	1.00	1.00	1.00
25	60.0	1.00	1.00	1.00	1.00	1.00	1.00
26	60.0	1.00	1.00	1.00	1.00	1.00	1.00
27	65.0	1.00	1.00	1.00	1.00	1.00	1.00
28	70.0	1.00	1.00	1.00	1.00	1.00	1.00
29	70.0	1.00	1.00	1.00	1.00	1.00	1.00
30	70.0	1.00	1.00	1.00	1.00	1.00	1.00
31	75.0	1.00	1.00	1.00	1.00	1.00	1.00
32	80.0	1.00	1.00	1.00	1.00	1.00	1.00
33	80.0	1.00	1.00	1.00	1.00	1.00	1.00
34	80.0	1.00	1.00	1.00	1.00	1.00	1.00
35	85.0	1.00	1.00	1.00	1.00	1.00	1.00
36	90.0	1.00	1.00	1.00	1.00	1.00	1.00
37	90.0	1.00	1.00	1.00	1.00	1.00	1.00
38	90.0	1.00	1.00	1.00	1.00	1.00	1.00
39	95.0	1.00	1.00	1.00	1.00	1.00	1.00
40	100.0	1.00	1.00	1.00	1.00	1.00	1.00
41	100.0	1.00	1.00	1.00	1.00	1.00	1.00
42	100.0	1.00	1.00	1.00	1.00	1.00	1.00
43	105.0	1.00	1.00	1.00	1.00	1.00	1.00
44	110.0	1.00	1.00	1.00	1.00	1.00	1.00
45	110.0	1.00	1.00	1.00	1.00	1.00	1.00
46	110.0	1.00	1.00	1.00	1.00	1.00	1.00
47	115.0	1.00	1.00	1.00	1.00	1.00	1.00
48	120.0	1.00	1.00	1.00	1.00	1.00	1.00
49	120.0	1.00	1.00	1.00	1.00	1.00	1.00
50	120.0	1.00	1.00	1.00	1.00	1.00	1.00
51	125.0	1.00	1.00	1.00	1.00	1.00	1.00
52	130.0	1.00	1.00	1.00	1.00	1.00	1.00
53	130.0	1.00	1.00	1.00	1.00	1.00	1.00
54	130.0	1.00	1.00	1.00	1.00	1.00	1.00
55	135.0	1.00	1.00	1.00	1.00	1.00	1.00
56	140.0	1.00	1.00	1.00	1.00	1.00	1.00
57	140.0	1.00	1.00	1.00	1.00	1.00	1.00
58	140.0	1.00	1.00	1.00	1.00	1.00	1.00
59	145.0	1.00	1.00	1.00	1.00	1.00	1.00

Figure 5-22 (Cont.)

60	150.0	1.00	1.00	1.00	1.00	1.00	1.00
61	150.0	1.00	1.00	1.00	1.00	1.00	1.00
62	150.0	1.00	1.00	1.00	1.00	1.00	1.00
63	155.0	1.00	1.00	1.00	1.00	1.00	1.00
64	160.0	1.00	1.00	1.00	1.00	1.00	1.00
65	160.0	1.00	1.00	1.00	1.00	1.00	1.00
66	160.0	1.00	1.00	1.00	1.00	1.00	1.00
67	165.0	1.00	1.00	1.00	1.00	1.00	1.00
68	170.0	1.00	1.00	1.00	1.00	1.00	1.00
69	170.0	1.00	1.00	1.00	1.00	1.00	1.00
70	170.0	1.00	1.00	1.00	1.00	1.00	1.00
71	175.0	1.00	1.00	1.00	1.00	1.00	1.00
72	180.0	1.00	1.00	1.00	1.00	1.00	1.00
73	180.0	1.00	1.00	1.00	1.00	1.00	1.00
74	180.0	1.00	1.00	1.00	1.00	1.00	1.00
75	185.0	1.00	1.00	1.00	1.00	1.00	1.00
76	190.0	1.00	1.00	1.00	1.00	1.00	1.00
77	190.0	1.00	1.00	1.00	1.00	1.00	1.00
78	190.0	1.00	1.00	1.00	1.00	1.00	1.00
79	195.0	1.00	1.00	1.00	1.00	1.00	1.00
80	200.0	1.00	1.00	1.00	1.00	1.00	1.00
81	200.0	1.00	1.00	1.00	1.00	1.00	1.00
82	200.0	1.00	1.00	1.00	1.00	1.00	1.00
83	205.0	1.00	1.00	1.00	1.00	1.00	1.00
84	210.0	1.00	1.00	1.00	1.00	1.00	1.00
85	210.0	1.00	1.00	1.00	1.00	1.00	1.00
86	210.0	1.00	1.00	1.00	1.00	1.00	1.00
87	215.0	1.00	1.00	1.00	1.00	1.00	1.00
88	220.0	1.00	1.00	1.00	1.00	1.00	1.00
89	220.0	1.00	1.00	1.00	1.00	1.00	1.00
90	220.0	1.00	1.00	1.00	1.00	1.00	1.00
91	225.0	1.00	1.00	1.00	1.00	1.00	1.00
92	230.0	1.00	1.00	1.00	1.00	1.00	1.00
93	230.0	1.00	1.00	1.00	1.00	1.00	1.00
94	230.0	1.00	1.00	1.00	1.00	1.00	1.00
95	235.0	1.00	1.00	1.00	1.00	1.00	1.00
96	240.0	1.00	1.00	1.00	1.00	1.00	1.00
97	240.0	1.00	1.00	1.00	1.00	1.00	1.00
98	240.0	1.00	1.00	1.00	1.00	1.00	1.00
99	245.0	1.00	1.00	1.00	1.00	1.00	1.00
100	250.0	1.00	1.00	1.00	1.00	1.00	1.00
101	250.0	1.00	1.00	1.00	1.00	1.00	1.00
102	250.0	1.00	1.00	1.00	1.00	1.00	1.00
103	255.0	1.00	1.00	1.00	1.00	1.00	1.00
104	260.0	1.00	1.00	1.00	1.00	1.00	1.00
105	260.0	1.00	1.00	1.00	1.00	1.00	1.00
106	260.0	1.00	1.00	1.00	1.00	1.00	1.00
107	265.0	1.00	1.00	1.00	1.00	1.00	1.00
108	270.0	1.00	1.00	1.00	1.00	1.00	1.00
109	270.0	1.00	1.00	1.00	1.00	1.00	1.00
110	270.0	1.00	1.00	1.00	1.00	1.00	1.00
111	275.0	1.00	1.00	1.00	1.00	1.00	1.00
112	280.0	1.00	1.00	1.00	1.00	1.00	1.00
113	280.0	1.00	1.00	1.00	1.00	1.00	1.00
114	280.0	1.00	1.00	1.00	1.00	1.00	1.00
115	285.0	1.00	1.00	1.00	1.00	1.00	1.00
116	290.0	1.00	1.00	1.00	1.00	1.00	1.00
117	290.0	1.00	1.00	1.00	1.00	1.00	1.00
118	290.0	1.00	1.00	1.00	1.00	1.00	1.00
119	295.0	1.00	1.00	1.00	1.00	1.00	1.00
120	300.0	1.00	1.00	1.00	1.00	1.00	1.00
121	300.0	1.00	1.00	1.00	1.00	1.00	1.00
122	300.0	1.00	1.00	1.00	1.00	1.00	1.00
123	305.0	1.00	1.00	1.00	1.00	1.00	1.00
124	310.0	1.00	1.00	1.00	1.00	1.00	1.00
125	310.0	1.00	1.00	1.00	1.00	1.00	1.00

126	310.0	1.00	1.00	1.00	1.00	1.00	1.00
127	315.0	1.00	1.00	1.00	1.00	1.00	1.00
128	320.0	1.00	1.00	1.00	1.00	1.00	1.00
129	320.0	1.00	1.00	1.00	1.00	1.00	1.00
130	320.0	1.00	1.00	1.00	1.00	1.00	1.00
131	325.0	1.00	1.00	1.00	1.00	1.00	1.00
132	330.0	1.00	1.00	1.00	1.00	1.00	1.00
133	330.0	1.00	1.00	1.00	1.00	1.00	1.00
134	330.0	1.00	1.00	1.00	1.00	1.00	1.00
135	335.0	1.00	1.00	1.00	1.00	1.00	1.00
136	340.0	1.00	1.00	1.00	1.00	1.00	1.00
137	340.0	1.00	1.00	1.00	1.00	1.00	1.00
138	340.0	1.00	1.00	1.00	1.00	1.00	1.00
139	345.0	1.00	1.00	1.00	1.00	1.00	1.00
140	350.0	1.00	1.00	1.00	1.00	1.00	1.00
141	350.0	1.00	1.00	1.00	1.00	1.00	1.00
142	350.0	1.00	1.00	1.00	1.00	1.00	1.00
143	355.0	1.00	1.00	1.00	1.00	1.00	1.00
144	360.0	1.00	1.00	1.00	1.00	1.00	1.00
145	360.0	1.00	1.00	1.00	1.00	1.00	1.00

Figure 5-22 (Cont.)

NON-DIM CLEARANCE DISTRIBUTION(H/C) FOR PAD NUMBER 1

	I =	13	14	15	16	17	18
	AXIAL LENGTH IN.	3.000	3.100	3.200	3.300	3.400	3.500
J	DEG.						
1	0.0	1.00	1.00	1.00	1.00	1.00	1.00
2	0.0	1.00	1.00	1.00	1.00	1.00	1.00
3	5.0	1.00	1.00	1.00	1.00	1.00	1.00
4	10.0	1.00	1.00	1.00	1.00	1.00	1.00
5	10.0	1.00	1.00	1.00	1.00	1.00	1.00
6	10.0	1.00	1.00	1.00	1.00	1.00	1.00
7	15.0	1.00	1.00	1.00	1.00	1.00	1.00
8	20.0	1.00	1.00	1.00	1.00	1.00	1.00
9	20.0	1.00	1.00	1.00	1.00	1.00	1.00
10	20.0	1.00	1.00	1.00	1.00	1.00	1.00
11	25.0	1.00	1.00	1.00	1.00	1.00	1.00
12	30.0	1.00	1.00	1.00	1.00	1.00	1.00
13	30.0	1.00	1.00	1.00	1.00	1.00	1.00
14	30.0	1.00	1.00	1.00	1.00	1.00	1.00
15	35.0	1.00	1.00	1.00	1.00	1.00	1.00
16	40.0	1.00	1.00	1.00	1.00	1.00	1.00
17	40.0	1.00	1.00	1.00	1.00	1.00	1.00
18	40.0	1.00	1.00	1.00	1.00	1.00	1.00
19	45.0	1.00	1.00	1.00	1.00	1.00	1.00
20	50.0	1.00	1.00	1.00	1.00	1.00	1.00
21	50.0	1.00	1.00	1.00	1.00	1.00	1.00
22	50.0	1.00	1.00	1.00	1.00	1.00	1.00
23	55.0	1.00	1.00	1.00	1.00	1.00	1.00
24	60.0	1.00	1.00	1.00	1.00	1.00	1.00
25	60.0	1.00	1.00	1.00	1.00	1.00	1.00
26	60.0	1.00	1.00	1.00	1.00	1.00	1.00
27	65.0	1.00	1.00	1.00	1.00	1.00	1.00
28	70.0	1.00	1.00	1.00	1.00	1.00	1.00
29	70.0	1.00	1.00	1.00	1.00	1.00	1.00
30	70.0	1.00	1.00	1.00	1.00	1.00	1.00
31	75.0	1.00	1.00	1.00	1.00	1.00	1.00
32	80.0	1.00	1.00	1.00	1.00	1.00	1.00
33	80.0	1.00	1.00	1.00	1.00	1.00	1.00
34	80.0	1.00	1.00	1.00	1.00	1.00	1.00
35	85.0	1.00	1.00	1.00	1.00	1.00	1.00
36	90.0	1.00	1.00	1.00	1.00	1.00	1.00
37	90.0	1.00	1.00	1.00	1.00	1.00	1.00
38	90.0	1.00	1.00	1.00	1.00	1.00	1.00
39	95.0	1.00	1.00	1.00	1.00	1.00	1.00
40	100.0	1.00	1.00	1.00	1.00	1.00	1.00
41	100.0	1.00	1.00	1.00	1.00	1.00	1.00
42	100.0	1.00	1.00	1.00	1.00	1.00	1.00
43	105.0	1.00	1.00	1.00	1.00	1.00	1.00
44	110.0	1.00	1.00	1.00	1.00	1.00	1.00
45	110.0	1.00	1.00	1.00	1.00	1.00	1.00
46	110.0	1.00	1.00	1.00	1.00	1.00	1.00
47	115.0	1.00	1.00	1.00	1.00	1.00	1.00
48	120.0	1.00	1.00	1.00	1.00	1.00	1.00
49	120.0	1.00	1.00	1.00	1.00	1.00	1.00
50	120.0	1.00	1.00	1.00	1.00	1.00	1.00
51	125.0	1.00	1.00	1.00	1.00	1.00	1.00
52	130.0	1.00	1.00	1.00	1.00	1.00	1.00
53	130.0	1.00	1.00	1.00	1.00	1.00	1.00
54	130.0	1.00	1.00	1.00	1.00	1.00	1.00
55	135.0	1.00	1.00	1.00	1.00	1.00	1.00
56	140.0	1.00	1.00	1.00	1.00	1.00	1.00
57	140.0	1.00	1.00	1.00	1.00	1.00	1.00
58	140.0	1.00	1.00	1.00	1.00	1.00	1.00
59	145.0	1.00	1.00	1.00	1.00	1.00	1.00

60	150.0	1.00	1.00	1.00	1.00	1.00	1.00
61	150.0	1.00	1.00	1.00	1.00	1.00	1.00
62	150.0	1.00	1.00	1.00	1.00	1.00	1.00
63	155.0	1.00	1.00	1.00	1.00	1.00	1.00
64	160.0	1.00	1.00	1.00	1.00	1.00	1.00
65	160.0	1.00	1.00	1.00	1.00	1.00	1.00
66	160.0	1.00	1.00	1.00	1.00	1.00	1.00
67	165.0	1.00	1.00	1.00	1.00	1.00	1.00
68	170.0	1.00	1.00	1.00	1.00	1.00	1.00
69	170.0	1.00	1.00	1.00	1.00	1.00	1.00
70	170.0	1.00	1.00	1.00	1.00	1.00	1.00
71	175.0	1.00	1.00	1.00	1.00	1.00	1.00
72	180.0	1.00	1.00	1.00	1.00	1.00	1.00
73	180.0	1.00	1.00	1.00	1.00	1.00	1.00
74	180.0	1.00	1.00	1.00	1.00	1.00	1.00
75	185.0	1.00	1.00	1.00	1.00	1.00	1.00
76	190.0	1.00	1.00	1.00	1.00	1.00	1.00
77	190.0	1.00	1.00	1.00	1.00	1.00	1.00
78	190.0	1.00	1.00	1.00	1.00	1.00	1.00
79	195.0	1.00	1.00	1.00	1.00	1.00	1.00
80	200.0	1.00	1.00	1.00	1.00	1.00	1.00
81	200.0	1.00	1.00	1.00	1.00	1.00	1.00
82	200.0	1.00	1.00	1.00	1.00	1.00	1.00
83	205.0	1.00	1.00	1.00	1.00	1.00	1.00
84	210.0	1.00	1.00	1.00	1.00	1.00	1.00
85	210.0	1.00	1.00	1.00	1.00	1.00	1.00
86	210.0	1.00	1.00	1.00	1.00	1.00	1.00
87	215.0	1.00	1.00	1.00	1.00	1.00	1.00
88	220.0	1.00	1.00	1.00	1.00	1.00	1.00
89	220.0	1.00	1.00	1.00	1.00	1.00	1.00
90	220.0	1.00	1.00	1.00	1.00	1.00	1.00
91	225.0	1.00	1.00	1.00	1.00	1.00	1.00
92	230.0	1.00	1.00	1.00	1.00	1.00	1.00
93	230.0	1.00	1.00	1.00	1.00	1.00	1.00
94	230.0	1.00	1.00	1.00	1.00	1.00	1.00
95	235.0	1.00	1.00	1.00	1.00	1.00	1.00
96	240.0	1.00	1.00	1.00	1.00	1.00	1.00
97	240.0	1.00	1.00	1.00	1.00	1.00	1.00
98	240.0	1.00	1.00	1.00	1.00	1.00	1.00
99	245.0	1.00	1.00	1.00	1.00	1.00	1.00
100	250.0	1.00	1.00	1.00	1.00	1.00	1.00
101	250.0	1.00	1.00	1.00	1.00	1.00	1.00
102	250.0	1.00	1.00	1.00	1.00	1.00	1.00
103	255.0	1.00	1.00	1.00	1.00	1.00	1.00
104	260.0	1.00	1.00	1.00	1.00	1.00	1.00
105	260.0	1.00	1.00	1.00	1.00	1.00	1.00
106	260.0	1.00	1.00	1.00	1.00	1.00	1.00
107	265.0	1.00	1.00	1.00	1.00	1.00	1.00
108	270.0	1.00	1.00	1.00	1.00	1.00	1.00
109	270.0	1.00	1.00	1.00	1.00	1.00	1.00
110	270.0	1.00	1.00	1.00	1.00	1.00	1.00
111	275.0	1.00	1.00	1.00	1.00	1.00	1.00
112	280.0	1.00	1.00	1.00	1.00	1.00	1.00
113	280.0	1.00	1.00	1.00	1.00	1.00	1.00
114	280.0	1.00	1.00	1.00	1.00	1.00	1.00
115	285.0	1.00	1.00	1.00	1.00	1.00	1.00
116	290.0	1.00	1.00	1.00	1.00	1.00	1.00
117	290.0	1.00	1.00	1.00	1.00	1.00	1.00
118	290.0	1.00	1.00	1.00	1.00	1.00	1.00
119	295.0	1.00	1.00	1.00	1.00	1.00	1.00
120	300.0	1.00	1.00	1.00	1.00	1.00	1.00
121	300.0	1.00	1.00	1.00	1.00	1.00	1.00
122	300.0	1.00	1.00	1.00	1.00	1.00	1.00
123	305.0	1.00	1.00	1.00	1.00	1.00	1.00
124	310.0	1.00	1.00	1.00	1.00	1.00	1.00
125	310.0	1.00	1.00	1.00	1.00	1.00	1.00

Figure 5-22 (Cont.)

126	310.0	1.00	1.00	1.00	1.00	1.00	1.00
127	315.0	1.00	1.00	1.00	1.00	1.00	1.00
128	320.0	1.00	1.00	1.00	1.00	1.00	1.00
129	320.0	1.00	1.00	1.00	1.00	1.00	1.00
130	320.0	1.00	1.00	1.00	1.00	1.00	1.00
131	325.0	1.00	1.00	1.00	1.00	1.00	1.00
132	330.0	1.00	1.00	1.00	1.00	1.00	1.00
133	330.0	1.00	1.00	1.00	1.00	1.00	1.00
134	330.0	1.00	1.00	1.00	1.00	1.00	1.00
135	335.0	1.00	1.00	1.00	1.00	1.00	1.00
136	340.0	1.00	1.00	1.00	1.00	1.00	1.00
137	340.0	1.00	1.00	1.00	1.00	1.00	1.00
138	340.0	1.00	1.00	1.00	1.00	1.00	1.00
139	345.0	1.00	1.00	1.00	1.00	1.00	1.00
140	350.0	1.00	1.00	1.00	1.00	1.00	1.00
141	350.0	1.00	1.00	1.00	1.00	1.00	1.00
142	350.0	1.00	1.00	1.00	1.00	1.00	1.00
143	355.0	1.00	1.00	1.00	1.00	1.00	1.00
144	360.0	1.00	1.00	1.00	1.00	1.00	1.00
145	360.0	1.00	1.00	1.00	1.00	1.00	1.00

NON-DIM CLEARANCE DISTRIBUTION(H/C) FOR PAD NUMBER 1

	I =	19	20	21	22	23
	AXIAL LENGTH IN.	3.600	3.700	3.800	3.900	4.000
J	DEG.					
1	0.0	1.00	1.00	1.00	1.00	1.00
2	0.0	1.00	1.00	1.00	1.00	1.00
3	5.0	1.00	1.00	1.00	1.00	1.00
4	10.0	1.00	1.00	1.00	1.00	1.00
5	10.0	1.00	1.00	1.00	1.00	1.00
6	10.0	1.00	1.00	1.00	1.00	1.00
7	15.0	1.00	1.00	1.00	1.00	1.00
8	20.0	1.00	1.00	1.00	1.00	1.00
9	20.0	1.00	1.00	1.00	1.00	1.00
10	20.0	1.00	1.00	1.00	1.00	1.00
11	25.0	1.00	1.00	1.00	1.00	1.00
12	30.0	1.00	1.00	1.00	1.00	1.00
13	30.0	1.00	1.00	1.00	1.00	1.00
14	30.0	1.00	1.00	1.00	1.00	1.00
15	35.0	1.00	1.00	1.00	1.00	1.00
16	40.0	1.00	1.00	1.00	1.00	1.00
17	40.0	1.00	1.00	1.00	1.00	1.00
18	40.0	1.00	1.00	1.00	1.00	1.00
19	45.0	1.00	1.00	1.00	1.00	1.00
20	50.0	1.00	1.00	1.00	1.00	1.00
21	50.0	1.00	1.00	1.00	1.00	1.00
22	50.0	1.00	1.00	1.00	1.00	1.00
23	55.0	1.00	1.00	1.00	1.00	1.00
24	60.0	1.00	1.00	1.00	1.00	1.00
25	60.0	1.00	1.00	1.00	1.00	1.00
26	60.0	1.00	1.00	1.00	1.00	1.00
27	65.0	1.00	1.00	1.00	1.00	1.00
28	70.0	1.00	1.00	1.00	1.00	1.00
29	70.0	1.00	1.00	1.00	1.00	1.00
30	70.0	1.00	1.00	1.00	1.00	1.00
31	75.0	1.00	1.00	1.00	1.00	1.00
32	80.0	1.00	1.00	1.00	1.00	1.00
33	80.0	1.00	1.00	1.00	1.00	1.00
34	80.0	1.00	1.00	1.00	1.00	1.00
35	85.0	1.00	1.00	1.00	1.00	1.00
36	90.0	1.00	1.00	1.00	1.00	1.00
37	90.0	1.00	1.00	1.00	1.00	1.00
38	90.0	1.00	1.00	1.00	1.00	1.00
39	95.0	1.00	1.00	1.00	1.00	1.00
40	100.0	1.00	1.00	1.00	1.00	1.00
41	100.0	1.00	1.00	1.00	1.00	1.00
42	100.0	1.00	1.00	1.00	1.00	1.00
43	105.0	1.00	1.00	1.00	1.00	1.00
44	110.0	1.00	1.00	1.00	1.00	1.00
45	110.0	1.00	1.00	1.00	1.00	1.00
46	110.0	1.00	1.00	1.00	1.00	1.00
47	115.0	1.00	1.00	1.00	1.00	1.00
48	120.0	1.00	1.00	1.00	1.00	1.00
49	120.0	1.00	1.00	1.00	1.00	1.00
50	120.0	1.00	1.00	1.00	1.00	1.00
51	125.0	1.00	1.00	1.00	1.00	1.00
52	130.0	1.00	1.00	1.00	1.00	1.00
53	130.0	1.00	1.00	1.00	1.00	1.00
54	130.0	1.00	1.00	1.00	1.00	1.00
55	135.0	1.00	1.00	1.00	1.00	1.00
56	140.0	1.00	1.00	1.00	1.00	1.00
57	140.0	1.00	1.00	1.00	1.00	1.00
58	140.0	1.00	1.00	1.00	1.00	1.00
59	145.0	1.00	1.00	1.00	1.00	1.00
60	150.0	1.00	1.00	1.00	1.00	1.00

Figure 5-22 (Cont.)

61	150.0	1.00	1.00	1.00	1.00	1.00
62	150.0	1.00	1.00	1.00	1.00	1.00
63	155.0	1.00	1.00	1.00	1.00	1.00
64	160.0	1.00	1.00	1.00	1.00	1.00
65	160.0	1.00	1.00	1.00	1.00	1.00
66	160.0	1.00	1.00	1.00	1.00	1.00
67	165.0	1.00	1.00	1.00	1.00	1.00
68	170.0	1.00	1.00	1.00	1.00	1.00
69	170.0	1.00	1.00	1.00	1.00	1.00
70	170.0	1.00	1.00	1.00	1.00	1.00
71	175.0	1.00	1.00	1.00	1.00	1.00
72	180.0	1.00	1.00	1.00	1.00	1.00
73	180.0	1.00	1.00	1.00	1.00	1.00
74	180.0	1.00	1.00	1.00	1.00	1.00
75	185.0	1.00	1.00	1.00	1.00	1.00
76	190.0	1.00	1.00	1.00	1.00	1.00
77	190.0	1.00	1.00	1.00	1.00	1.00
78	190.0	1.00	1.00	1.00	1.00	1.00
79	195.0	1.00	1.00	1.00	1.00	1.00
80	200.0	1.00	1.00	1.00	1.00	1.00
81	200.0	1.00	1.00	1.00	1.00	1.00
82	200.0	1.00	1.00	1.00	1.00	1.00
83	205.0	1.00	1.00	1.00	1.00	1.00
84	210.0	1.00	1.00	1.00	1.00	1.00
85	210.0	1.00	1.00	1.00	1.00	1.00
86	210.0	1.00	1.00	1.00	1.00	1.00
87	215.0	1.00	1.00	1.00	1.00	1.00
88	220.0	1.00	1.00	1.00	1.00	1.00
89	220.0	1.00	1.00	1.00	1.00	1.00
90	220.0	1.00	1.00	1.00	1.00	1.00
91	225.0	1.00	1.00	1.00	1.00	1.00
92	230.0	1.00	1.00	1.00	1.00	1.00
93	230.0	1.00	1.00	1.00	1.00	1.00
94	230.0	1.00	1.00	1.00	1.00	1.00
95	235.0	1.00	1.00	1.00	1.00	1.00
96	240.0	1.00	1.00	1.00	1.00	1.00
97	240.0	1.00	1.00	1.00	1.00	1.00
98	240.0	1.00	1.00	1.00	1.00	1.00
99	245.0	1.00	1.00	1.00	1.00	1.00
100	250.0	1.00	1.00	1.00	1.00	1.00
101	250.0	1.00	1.00	1.00	1.00	1.00
102	250.0	1.00	1.00	1.00	1.00	1.00
103	255.0	1.00	1.00	1.00	1.00	1.00
104	260.0	1.00	1.00	1.00	1.00	1.00
105	260.0	1.00	1.00	1.00	1.00	1.00
106	260.0	1.00	1.00	1.00	1.00	1.00
107	265.0	1.00	1.00	1.00	1.00	1.00
108	270.0	1.00	1.00	1.00	1.00	1.00
109	270.0	1.00	1.00	1.00	1.00	1.00
110	270.0	1.00	1.00	1.00	1.00	1.00
111	275.0	1.00	1.00	1.00	1.00	1.00
112	280.0	1.00	1.00	1.00	1.00	1.00
113	280.0	1.00	1.00	1.00	1.00	1.00
114	280.0	1.00	1.00	1.00	1.00	1.00
115	285.0	1.00	1.00	1.00	1.00	1.00
116	290.0	1.00	1.00	1.00	1.00	1.00
117	290.0	1.00	1.00	1.00	1.00	1.00
118	290.0	1.00	1.00	1.00	1.00	1.00
119	295.0	1.00	1.00	1.00	1.00	1.00
120	300.0	1.00	1.00	1.00	1.00	1.00
121	300.0	1.00	1.00	1.00	1.00	1.00
122	300.0	1.00	1.00	1.00	1.00	1.00
123	305.0	1.00	1.00	1.00	1.00	1.00
124	310.0	1.00	1.00	1.00	1.00	1.00
125	310.0	1.00	1.00	1.00	1.00	1.00
126	310.0	1.00	1.00	1.00	1.00	1.00

127	315.0	1.00	1.00	1.00	1.00	1.00
128	320.0	1.00	1.00	1.00	1.00	1.00
129	320.0	1.00	1.00	1.00	1.00	1.00
130	320.0	1.00	1.00	1.00	1.00	1.00
131	325.0	1.00	1.00	1.00	1.00	1.00
132	330.0	1.00	1.00	1.00	1.00	1.00
133	330.0	1.00	1.00	1.00	1.00	1.00
134	330.0	1.00	1.00	1.00	1.00	1.00
135	335.0	1.00	1.00	1.00	1.00	1.00
136	340.0	1.00	1.00	1.00	1.00	1.00
137	340.0	1.00	1.00	1.00	1.00	1.00
138	340.0	1.00	1.00	1.00	1.00	1.00
139	345.0	1.00	1.00	1.00	1.00	1.00
140	350.0	1.00	1.00	1.00	1.00	1.00
141	350.0	1.00	1.00	1.00	1.00	1.00
142	350.0	1.00	1.00	1.00	1.00	1.00
143	355.0	1.00	1.00	1.00	1.00	1.00
144	360.0	1.00	1.00	1.00	1.00	1.00
145	360.0	1.00	1.00	1.00	1.00	1.00

MIN. CLEAR.= 1.0000 AT 360.00 DEGREES

MAX. CLEAR.= 1.0000 AT 360.00 DEGREES

Figure 5-22 (Cont.)

PRESSURE DISTRIBUTION (PSI) FOR PAD NUMBER 1

		I = 1	2	3	4	5	6
	AXIAL LENGTH IN.	2.000	2.100	2.200	2.300	2.390	2.400
J	DEG.						
1	0.0	0.000E+00	80.3	118.	147.	171.	176.
2	0.0	0.000E+00	80.3	118.	147.	171.	174.
3	5.0	0.000E+00	78.8	115.	140.	156.	157.
4	10.0	0.000E+00	80.3	118.	147.	171.	174.
5	10.0	0.000E+00	80.3	118.	147.	171.	176.
6	10.0	0.000E+00	80.3	118.	147.	171.	174.
7	15.0	0.000E+00	78.8	115.	140.	156.	157.
8	20.0	0.000E+00	80.3	118.	147.	171.	174.
9	20.0	0.000E+00	80.3	118.	147.	171.	176.
10	20.0	0.000E+00	80.3	118.	147.	171.	174.
11	25.0	0.000E+00	78.8	115.	140.	156.	157.
12	30.0	0.000E+00	80.3	118.	147.	171.	174.
13	30.0	0.000E+00	80.3	118.	147.	171.	176.
14	30.0	0.000E+00	80.3	118.	147.	171.	174.
15	35.0	0.000E+00	78.8	115.	140.	156.	157.
16	40.0	0.000E+00	80.3	118.	147.	171.	174.
17	40.0	0.000E+00	80.3	118.	147.	171.	176.
18	40.0	0.000E+00	80.3	118.	147.	171.	174.
19	45.0	0.000E+00	78.8	115.	140.	156.	157.
20	50.0	0.000E+00	80.3	118.	147.	171.	174.
21	50.0	0.000E+00	80.3	118.	147.	171.	176.
22	50.0	0.000E+00	80.3	118.	147.	171.	174.
23	55.0	0.000E+00	78.8	115.	140.	156.	157.
24	60.0	0.000E+00	80.3	118.	147.	171.	174.
25	60.0	0.000E+00	80.3	118.	147.	171.	176.
26	60.0	0.000E+00	80.3	118.	147.	171.	174.
27	65.0	0.000E+00	78.8	115.	140.	156.	157.
28	70.0	0.000E+00	80.3	118.	147.	171.	174.
29	70.0	0.000E+00	80.3	118.	147.	171.	176.
30	70.0	0.000E+00	80.3	118.	147.	171.	174.
31	75.0	0.000E+00	78.8	115.	140.	156.	157.
32	80.0	0.000E+00	80.3	118.	147.	171.	174.
33	80.0	0.000E+00	80.3	118.	147.	171.	176.
34	80.0	0.000E+00	80.3	118.	147.	171.	174.
35	85.0	0.000E+00	78.8	115.	140.	156.	157.
36	90.0	0.000E+00	80.3	118.	147.	171.	174.
37	90.0	0.000E+00	80.3	118.	147.	171.	176.
38	90.0	0.000E+00	80.3	118.	147.	171.	174.
39	95.0	0.000E+00	78.8	115.	140.	156.	157.
40	100.0	0.000E+00	80.3	118.	147.	171.	174.
41	100.0	0.000E+00	80.3	118.	147.	171.	176.
42	100.0	0.000E+00	80.3	118.	147.	171.	174.
43	105.0	0.000E+00	78.8	115.	140.	156.	157.
44	110.0	0.000E+00	80.3	118.	147.	171.	174.
45	110.0	0.000E+00	80.3	118.	147.	171.	176.
46	110.0	0.000E+00	80.3	118.	147.	171.	174.
47	115.0	0.000E+00	78.8	115.	140.	156.	157.
48	120.0	0.000E+00	80.3	118.	147.	171.	174.
49	120.0	0.000E+00	80.3	118.	147.	171.	176.
50	120.0	0.000E+00	80.3	118.	147.	171.	174.
51	125.0	0.000E+00	78.8	115.	140.	156.	157.
52	130.0	0.000E+00	80.3	118.	147.	171.	174.
53	130.0	0.000E+00	80.3	118.	147.	171.	176.
54	130.0	0.000E+00	80.3	118.	147.	171.	174.
55	135.0	0.000E+00	78.8	115.	140.	156.	157.
56	140.0	0.000E+00	80.3	118.	147.	171.	174.
57	140.0	0.000E+00	80.3	118.	147.	171.	176.
58	140.0	0.000E+00	80.3	118.	147.	171.	174.
59	145.0	0.000E+00	78.8	115.	140.	156.	157.

60	150.0	0.000E+00	80.3	118.	147.	171.	174.
61	150.0	0.000E+00	80.3	118.	147.	171.	176.
62	150.0	0.000E+00	80.3	118.	147.	171.	174.
63	155.0	0.000E+00	78.8	115.	140.	156.	157.
64	160.0	0.000E+00	80.3	118.	147.	171.	174.
65	160.0	0.000E+00	80.3	118.	147.	171.	176.
66	160.0	0.000E+00	80.3	118.	147.	171.	174.
67	165.0	0.000E+00	78.8	115.	140.	156.	157.
68	170.0	0.000E+00	80.3	118.	147.	171.	174.
69	170.0	0.000E+00	80.3	118.	147.	171.	176.
70	170.0	0.000E+00	80.3	118.	147.	171.	174.
71	175.0	0.000E+00	78.8	115.	140.	156.	157.
72	180.0	0.000E+00	80.3	118.	147.	171.	174.
73	180.0	0.000E+00	80.3	118.	147.	171.	176.
74	180.0	0.000E+00	80.3	118.	147.	171.	174.
75	185.0	0.000E+00	78.8	115.	140.	156.	157.
76	190.0	0.000E+00	80.3	118.	147.	171.	174.
77	190.0	0.000E+00	80.3	118.	147.	171.	176.
78	190.0	0.000E+00	80.3	118.	147.	171.	174.
79	195.0	0.000E+00	78.8	115.	140.	156.	157.
80	200.0	0.000E+00	80.3	118.	147.	171.	174.
81	200.0	0.000E+00	80.3	118.	147.	171.	176.
82	200.0	0.000E+00	80.3	118.	147.	171.	174.
83	205.0	0.000E+00	78.8	115.	140.	156.	157.
84	210.0	0.000E+00	80.3	118.	147.	171.	174.
85	210.0	0.000E+00	80.3	118.	147.	171.	176.
86	210.0	0.000E+00	80.3	118.	147.	171.	174.
87	215.0	0.000E+00	78.8	115.	140.	156.	157.
88	220.0	0.000E+00	80.3	118.	147.	171.	174.
89	220.0	0.000E+00	80.3	118.	147.	171.	176.
90	220.0	0.000E+00	80.3	118.	147.	171.	174.
91	225.0	0.000E+00	78.8	115.	140.	156.	157.
92	230.0	0.000E+00	80.3	118.	147.	171.	174.
93	230.0	0.000E+00	80.3	118.	147.	171.	176.
94	230.0	0.000E+00	80.3	118.	147.	171.	174.
95	235.0	0.000E+00	78.8	115.	140.	156.	157.
96	240.0	0.000E+00	80.3	118.	147.	171.	174.
97	240.0	0.000E+00	80.3	118.	147.	171.	176.
98	240.0	0.000E+00	80.3	118.	147.	171.	174.
99	245.0	0.000E+00	78.8	115.	140.	156.	157.
100	250.0	0.000E+00	80.3	118.	147.	171.	174.
101	250.0	0.000E+00	80.3	118.	147.	171.	176.
102	250.0	0.000E+00	80.3	118.	147.	171.	174.
103	255.0	0.000E+00	78.8	115.	140.	156.	157.
104	260.0	0.000E+00	80.3	118.	147.	171.	174.
105	260.0	0.000E+00	80.3	118.	147.	171.	176.
106	260.0	0.000E+00	80.3	118.	147.	171.	174.
107	265.0	0.000E+00	78.8	115.	140.	156.	157.
108	270.0	0.000E+00	80.3	118.	147.	171.	174.
109	270.0	0.000E+00	80.3	118.	147.	171.	176.
110	270.0	0.000E+00	80.3	118.	147.	171.	174.
111	275.0	0.000E+00	78.8	115.	140.	156.	157.
112	280.0	0.000E+00	80.3	118.	147.	171.	174.
113	280.0	0.000E+00	80.3	118.	147.	171.	176.
114	280.0	0.000E+00	80.3	118.	147.	171.	174.
115	285.0	0.000E+00	78.8	115.	140.	156.	157.
116	290.0	0.000E+00	80.3	118.	147.	171.	174.
117	290.0	0.000E+00	80.3	118.	147.	171.	176.
118	290.0	0.000E+00	80.3	118.	147.	171.	174.
119	295.0	0.000E+00	78.8	115.	140.	156.	157.
120	300.0	0.000E+00	80.3	118.	147.	171.	174.
121	300.0	0.000E+00	80.3	118.	147.	171.	176.
122	300.0	0.000E+00	80.3	118.	147.	171.	174.
123	305.0	0.000E+00	78.8	115.	140.	156.	157.
124	310.0	0.000E+00	80.3	118.	147.	171.	174.
125	310.0	0.000E+00	80.3	118.	147.	171.	176.

Figure 5-22 (Cont.)

126	310.0	0.000E+00	80.3	118.	147.	171.	174.
127	315.0	0.000E+00	78.8	115.	140.	156.	157.
128	320.0	0.000E+00	80.3	118.	147.	171.	174.
129	320.0	0.000E+00	80.3	118.	147.	171.	176.
130	320.0	0.000E+00	80.3	118.	147.	171.	174.
131	325.0	0.000E+00	78.8	115.	140.	156.	157.
132	330.0	0.000E+00	80.3	118.	147.	171.	174.
133	330.0	0.000E+00	80.3	118.	147.	171.	176.
134	330.0	0.000E+00	80.3	118.	147.	171.	174.
135	335.0	0.000E+00	78.8	115.	140.	156.	157.
136	340.0	0.000E+00	80.3	118.	147.	171.	174.
137	340.0	0.000E+00	80.3	118.	147.	171.	176.
138	340.0	0.000E+00	80.3	118.	147.	171.	174.
139	345.0	0.000E+00	78.8	115.	140.	156.	157.
140	350.0	0.000E+00	80.3	118.	147.	171.	174.
141	350.0	0.000E+00	80.3	118.	147.	171.	176.
142	350.0	0.000E+00	80.3	118.	147.	171.	174.
143	355.0	0.000E+00	78.8	115.	140.	156.	157.
144	360.0	0.000E+00	80.3	118.	147.	171.	174.
145	360.0	0.000E+00	80.3	118.	147.	171.	176.

PRESSURE DISTRIBUTION (PSI) FOR PAD NUMBER 1

I =		7	8	9	10	11	12
AXIAL LENGTH IN.		2.410	2.500	2.600	2.700	2.800	2.900
J	DEG.						
1	0.0	174.	172.	173.	175.	177.	179.
2	0.0	174.	172.	173.	175.	177.	179.
3	5.0	158.	166.	170.	174.	177.	179.
4	10.0	174.	172.	173.	175.	177.	179.
5	10.0	174.	172.	173.	175.	177.	179.
6	10.0	174.	172.	173.	175.	177.	179.
7	15.0	158.	166.	170.	174.	177.	179.
8	20.0	174.	172.	173.	175.	177.	179.
9	20.0	174.	172.	173.	175.	177.	179.
10	20.0	174.	172.	173.	175.	177.	179.
11	25.0	158.	166.	170.	174.	177.	179.
12	30.0	174.	172.	173.	175.	177.	179.
13	30.0	174.	172.	173.	175.	177.	179.
14	30.0	174.	172.	173.	175.	177.	179.
15	35.0	158.	166.	170.	174.	177.	179.
16	40.0	174.	172.	173.	175.	177.	179.
17	40.0	174.	172.	173.	175.	177.	179.
18	40.0	174.	172.	173.	175.	177.	179.
19	45.0	158.	166.	170.	174.	177.	179.
20	50.0	174.	172.	173.	175.	177.	179.
21	50.0	174.	172.	173.	175.	177.	179.
22	50.0	174.	172.	173.	175.	177.	179.
23	55.0	158.	166.	170.	174.	177.	179.
24	60.0	174.	172.	173.	175.	177.	179.
25	60.0	174.	172.	173.	175.	177.	179.
26	60.0	174.	172.	173.	175.	177.	179.
27	65.0	158.	166.	170.	174.	177.	179.
28	70.0	174.	172.	173.	175.	177.	179.
29	70.0	174.	172.	173.	175.	177.	179.
30	70.0	174.	172.	173.	175.	177.	179.
31	75.0	158.	166.	170.	174.	177.	179.
32	80.0	174.	172.	173.	175.	177.	179.
33	80.0	174.	172.	173.	175.	177.	179.
34	80.0	174.	172.	173.	175.	177.	179.
35	85.0	158.	166.	170.	174.	177.	179.
36	90.0	174.	172.	173.	175.	177.	179.
37	90.0	174.	172.	173.	175.	177.	179.
38	90.0	174.	172.	173.	175.	177.	179.
39	95.0	158.	166.	170.	174.	177.	179.
40	100.0	174.	172.	173.	175.	177.	179.
41	100.0	174.	172.	173.	175.	177.	179.
42	100.0	174.	172.	173.	175.	177.	179.
43	105.0	158.	166.	170.	174.	177.	179.
44	110.0	174.	172.	173.	175.	177.	179.
45	110.0	174.	172.	173.	175.	177.	179.
46	110.0	174.	172.	173.	175.	177.	179.
47	115.0	158.	166.	170.	174.	177.	179.
48	120.0	174.	172.	173.	175.	177.	179.
49	120.0	174.	172.	173.	175.	177.	179.
50	120.0	174.	172.	173.	175.	177.	179.
51	125.0	158.	166.	170.	174.	177.	179.
52	130.0	174.	172.	173.	175.	177.	179.
53	130.0	174.	172.	173.	175.	177.	179.
54	130.0	174.	172.	173.	175.	177.	179.
55	135.0	158.	166.	170.	174.	177.	179.
56	140.0	174.	172.	173.	175.	177.	179.
57	140.0	174.	172.	173.	175.	177.	179.
58	140.0	174.	172.	173.	175.	177.	179.
59	145.0	158.	166.	170.	174.	177.	179.

Figure 5-22 (Cont.)

60	150.0	174.	172.	173.	175.	177.	179.
61	150.0	174.	172.	173.	175.	177.	179.
62	150.0	174.	172.	173.	175.	177.	179.
63	155.0	158.	166.	170.	174.	177.	179.
64	160.0	174.	172.	173.	175.	177.	179.
65	160.0	174.	172.	173.	175.	177.	179.
66	160.0	174.	172.	173.	175.	177.	179.
67	165.0	158.	166.	170.	174.	177.	179.
68	170.0	174.	172.	173.	175.	177.	179.
69	170.0	174.	172.	173.	175.	177.	179.
70	170.0	174.	172.	173.	175.	177.	179.
71	175.0	158.	166.	170.	174.	177.	179.
72	180.0	174.	172.	173.	175.	177.	179.
73	180.0	174.	172.	173.	175.	177.	179.
74	180.0	174.	172.	173.	175.	177.	179.
75	185.0	158.	166.	170.	174.	177.	179.
76	190.0	174.	172.	173.	175.	177.	179.
77	190.0	174.	172.	173.	175.	177.	179.
78	190.0	174.	172.	173.	175.	177.	179.
79	195.0	158.	166.	170.	174.	177.	179.
80	200.0	174.	172.	173.	175.	177.	179.
81	200.0	174.	172.	173.	175.	177.	179.
82	200.0	174.	172.	173.	175.	177.	179.
83	205.0	158.	166.	170.	174.	177.	179.
84	210.0	174.	172.	173.	175.	177.	179.
85	210.0	174.	172.	173.	175.	177.	179.
86	210.0	174.	172.	173.	175.	177.	179.
87	215.0	158.	166.	170.	174.	177.	179.
88	220.0	174.	172.	173.	175.	177.	179.
89	220.0	174.	172.	173.	175.	177.	179.
90	220.0	174.	172.	173.	175.	177.	179.
91	225.0	158.	166.	170.	174.	177.	179.
92	230.0	174.	172.	173.	175.	177.	179.
93	230.0	174.	172.	173.	175.	177.	179.
94	230.0	174.	172.	173.	175.	177.	179.
95	235.0	158.	166.	170.	174.	177.	179.
96	240.0	174.	172.	173.	175.	177.	179.
97	240.0	174.	172.	173.	175.	177.	179.
98	240.0	174.	172.	173.	175.	177.	179.
99	245.0	158.	166.	170.	174.	177.	179.
100	250.0	174.	172.	173.	175.	177.	179.
101	250.0	174.	172.	173.	175.	177.	179.
102	250.0	174.	172.	173.	175.	177.	179.
103	255.0	158.	166.	170.	174.	177.	179.
104	260.0	174.	172.	173.	175.	177.	179.
105	260.0	174.	172.	173.	175.	177.	179.
106	260.0	174.	172.	173.	175.	177.	179.
107	265.0	158.	166.	170.	174.	177.	179.
108	270.0	174.	172.	173.	175.	177.	179.
109	270.0	174.	172.	173.	175.	177.	179.
110	270.0	174.	172.	173.	175.	177.	179.
111	275.0	158.	166.	170.	174.	177.	179.
112	280.0	174.	172.	173.	175.	177.	179.
113	280.0	174.	172.	173.	175.	177.	179.
114	280.0	174.	172.	173.	175.	177.	179.
115	285.0	158.	166.	170.	174.	177.	179.
116	290.0	174.	172.	173.	175.	177.	179.
117	290.0	174.	172.	173.	175.	177.	179.
118	290.0	174.	172.	173.	175.	177.	179.
119	295.0	158.	166.	170.	174.	177.	179.
120	300.0	174.	172.	173.	175.	177.	179.
121	300.0	174.	172.	173.	175.	177.	179.
122	300.0	174.	172.	173.	175.	177.	179.
123	305.0	158.	166.	170.	174.	177.	179.
124	310.0	174.	172.	173.	175.	177.	179.
125	310.0	174.	172.	173.	175.	177.	179.

126	310.0	174.	172.	173.	175.	177.	179.
127	315.0	158.	166.	170.	174.	177.	179.
128	320.0	174.	172.	173.	175.	177.	179.
129	320.0	174.	172.	173.	175.	177.	179.
130	320.0	174.	172.	173.	175.	177.	179.
131	325.0	158.	166.	170.	174.	177.	179.
132	330.0	174.	172.	173.	175.	177.	179.
133	330.0	174.	172.	173.	175.	177.	179.
134	330.0	174.	172.	173.	175.	177.	179.
135	335.0	158.	166.	170.	174.	177.	179.
136	340.0	174.	172.	173.	175.	177.	179.
137	340.0	174.	172.	173.	175.	177.	179.
138	340.0	174.	172.	173.	175.	177.	179.
139	345.0	158.	166.	170.	174.	177.	179.
140	350.0	174.	172.	173.	175.	177.	179.
141	350.0	174.	172.	173.	175.	177.	179.
142	350.0	174.	172.	173.	175.	177.	179.
143	355.0	158.	166.	170.	174.	177.	179.
144	360.0	174.	172.	173.	175.	177.	179.
145	360.0	174.	172.	173.	175.	177.	179.

Figure 5-22 (Cont.)

PRESSURE DISTRIBUTION (PSI) FOR PAD NUMBER 1

	I =	13	14	15	16	17	18
AXIAL LENGTH IN.		3.000	3.100	3.200	3.300	3.400	3.500
J	DEG.						
1	0.0	182.	184.	186.	188.	190.	192.
2	0.0	182.	184.	186.	188.	190.	192.
3	5.0	181.	184.	186.	188.	190.	192.
4	10.0	182.	184.	186.	188.	190.	192.
5	10.0	182.	184.	186.	188.	190.	192.
6	10.0	182.	184.	186.	188.	190.	192.
7	15.0	181.	184.	186.	188.	190.	192.
8	20.0	182.	184.	186.	188.	190.	192.
9	20.0	182.	184.	186.	188.	190.	192.
10	20.0	182.	184.	186.	188.	190.	192.
11	25.0	181.	184.	186.	188.	190.	192.
12	30.0	182.	184.	186.	188.	190.	192.
13	30.0	182.	184.	186.	188.	190.	192.
14	30.0	182.	184.	186.	188.	190.	192.
15	35.0	181.	184.	186.	188.	190.	192.
16	40.0	182.	184.	186.	188.	190.	192.
17	40.0	182.	184.	186.	188.	190.	192.
18	40.0	182.	184.	186.	188.	190.	192.
19	45.0	181.	184.	186.	188.	190.	192.
20	50.0	182.	184.	186.	188.	190.	192.
21	50.0	182.	184.	186.	188.	190.	192.
22	50.0	182.	184.	186.	188.	190.	192.
23	55.0	181.	184.	186.	188.	190.	192.
24	60.0	182.	184.	186.	188.	190.	192.
25	60.0	182.	184.	186.	188.	190.	192.
26	60.0	182.	184.	186.	188.	190.	192.
27	65.0	181.	184.	186.	188.	190.	192.
28	70.0	182.	184.	186.	188.	190.	192.
29	70.0	182.	184.	186.	188.	190.	192.
30	70.0	182.	184.	186.	188.	190.	192.
31	75.0	181.	184.	186.	188.	190.	192.
32	80.0	182.	184.	186.	188.	190.	192.
33	80.0	182.	184.	186.	188.	190.	192.
34	80.0	182.	184.	186.	188.	190.	192.
35	85.0	181.	184.	186.	188.	190.	192.
36	90.0	182.	184.	186.	188.	190.	192.
37	90.0	182.	184.	186.	188.	190.	192.
38	90.0	182.	184.	186.	188.	190.	192.
39	95.0	181.	184.	186.	188.	190.	192.
40	100.0	182.	184.	186.	188.	190.	192.
41	100.0	182.	184.	186.	188.	190.	192.
42	100.0	182.	184.	186.	188.	190.	192.
43	105.0	181.	184.	186.	188.	190.	192.
44	110.0	182.	184.	186.	188.	190.	192.
45	110.0	182.	184.	186.	188.	190.	192.
46	110.0	182.	184.	186.	188.	190.	192.
47	115.0	181.	184.	186.	188.	190.	192.
48	120.0	182.	184.	186.	188.	190.	192.
49	120.0	182.	184.	186.	188.	190.	192.
50	120.0	182.	184.	186.	188.	190.	192.
51	125.0	181.	184.	186.	188.	190.	192.
52	130.0	182.	184.	186.	188.	190.	192.
53	130.0	182.	184.	186.	188.	190.	192.
54	130.0	182.	184.	186.	188.	190.	192.
55	135.0	181.	184.	186.	188.	190.	192.
56	140.0	182.	184.	186.	188.	190.	192.
57	140.0	182.	184.	186.	188.	190.	192.
58	140.0	182.	184.	186.	188.	190.	192.
59	145.0	181.	184.	186.	188.	190.	192.

60	150.0	182.	184.	186.	188.	190.	192.
61	150.0	182.	184.	186.	188.	190.	192.
62	150.0	182.	184.	186.	188.	190.	192.
63	155.0	181.	184.	186.	188.	190.	192.
64	160.0	182.	184.	186.	188.	190.	192.
65	160.0	182.	184.	186.	188.	190.	192.
66	160.0	182.	184.	186.	188.	190.	192.
67	165.0	181.	184.	186.	188.	190.	192.
68	170.0	182.	184.	186.	188.	190.	192.
69	170.0	182.	184.	186.	188.	190.	192.
70	170.0	182.	184.	186.	188.	190.	192.
71	175.0	181.	184.	186.	188.	190.	192.
72	180.0	182.	184.	186.	188.	190.	192.
73	180.0	182.	184.	186.	188.	190.	192.
74	180.0	182.	184.	186.	188.	190.	192.
75	185.0	181.	184.	186.	188.	190.	192.
76	190.0	182.	184.	186.	188.	190.	192.
77	190.0	182.	184.	186.	188.	190.	192.
78	190.0	182.	184.	186.	188.	190.	192.
79	195.0	181.	184.	186.	188.	190.	192.
80	200.0	182.	184.	186.	188.	190.	192.
81	200.0	182.	184.	186.	188.	190.	192.
82	200.0	182.	184.	186.	188.	190.	192.
83	205.0	181.	184.	186.	188.	190.	192.
84	210.0	182.	184.	186.	188.	190.	192.
85	210.0	182.	184.	186.	188.	190.	192.
86	210.0	182.	184.	186.	188.	190.	192.
87	215.0	181.	184.	186.	188.	190.	192.
88	220.0	182.	184.	186.	188.	190.	192.
89	220.0	182.	184.	186.	188.	190.	192.
90	220.0	182.	184.	186.	188.	190.	192.
91	225.0	181.	184.	186.	188.	190.	192.
92	230.0	182.	184.	186.	188.	190.	192.
93	230.0	182.	184.	186.	188.	190.	192.
94	230.0	182.	184.	186.	188.	190.	192.
95	235.0	181.	184.	186.	188.	190.	192.
96	240.0	182.	184.	186.	188.	190.	192.
97	240.0	182.	184.	186.	188.	190.	192.
98	240.0	182.	184.	186.	188.	190.	192.
99	245.0	181.	184.	186.	188.	190.	192.
100	250.0	182.	184.	186.	188.	190.	192.
101	250.0	182.	184.	186.	188.	190.	192.
102	250.0	182.	184.	186.	188.	190.	192.
103	255.0	181.	184.	186.	188.	190.	192.
104	260.0	182.	184.	186.	188.	190.	192.
105	260.0	182.	184.	186.	188.	190.	192.
106	260.0	182.	184.	186.	188.	190.	192.
107	265.0	181.	184.	186.	188.	190.	192.
108	270.0	182.	184.	186.	188.	190.	192.
109	270.0	182.	184.	186.	188.	190.	192.
110	270.0	182.	184.	186.	188.	190.	192.
111	275.0	181.	184.	186.	188.	190.	192.
112	280.0	182.	184.	186.	188.	190.	192.
113	280.0	182.	184.	186.	188.	190.	192.
114	280.0	182.	184.	186.	188.	190.	192.
115	285.0	181.	184.	186.	188.	190.	192.
116	290.0	182.	184.	186.	188.	190.	192.
117	290.0	182.	184.	186.	188.	190.	192.
118	290.0	182.	184.	186.	188.	190.	192.
119	295.0	181.	184.	186.	188.	190.	192.
120	300.0	182.	184.	186.	188.	190.	192.
121	300.0	182.	184.	186.	188.	190.	192.
122	300.0	182.	184.	186.	188.	190.	192.
123	305.0	181.	184.	186.	188.	190.	192.
124	310.0	182.	184.	186.	188.	190.	192.
125	310.0	182.	184.	186.	188.	190.	192.

Figure 5-22 (Cont.)

126	310.0	182.	184.	186.	188.	190.	192.
127	315.0	181.	184.	186.	188.	190.	192.
128	320.0	182.	184.	186.	188.	190.	192.
129	320.0	182.	184.	186.	188.	190.	192.
130	320.0	182.	184.	186.	188.	190.	192.
131	325.0	181.	184.	186.	188.	190.	192.
132	330.0	182.	184.	186.	188.	190.	192.
133	330.0	182.	184.	186.	188.	190.	192.
134	330.0	182.	184.	186.	188.	190.	192.
135	335.0	181.	184.	186.	188.	190.	192.
136	340.0	182.	184.	186.	188.	190.	192.
137	340.0	182.	184.	186.	188.	190.	192.
138	340.0	182.	184.	186.	188.	190.	192.
139	345.0	181.	184.	186.	188.	190.	192.
140	350.0	182.	184.	186.	188.	190.	192.
141	350.0	182.	184.	186.	188.	190.	192.
142	350.0	182.	184.	186.	188.	190.	192.
143	355.0	181.	184.	186.	188.	190.	192.
144	360.0	182.	184.	186.	188.	190.	192.
145	360.0	182.	184.	186.	188.	190.	192.

PRESSURE DISTRIBUTION (PSI) FOR PAD NUMBER 1

	I =	19	20	21	22	23
	AXIAL LENGTH IN.	3.600	3.700	3.800	3.900	4.000
J	DEG.					
1	0.0	193.	195.	197.	198.	200.
2	0.0	193.	195.	197.	198.	200.
3	5.0	193.	195.	197.	198.	200.
4	10.0	193.	195.	197.	198.	200.
5	10.0	193.	195.	197.	198.	200.
6	10.0	193.	195.	197.	198.	200.
7	15.0	193.	195.	197.	198.	200.
8	20.0	193.	195.	197.	198.	200.
9	20.0	193.	195.	197.	198.	200.
10	20.0	193.	195.	197.	198.	200.
11	25.0	193.	195.	197.	198.	200.
12	30.0	193.	195.	197.	198.	200.
13	30.0	193.	195.	197.	198.	200.
14	30.0	193.	195.	197.	198.	200.
15	35.0	193.	195.	197.	198.	200.
16	40.0	193.	195.	197.	198.	200.
17	40.0	193.	195.	197.	198.	200.
18	40.0	193.	195.	197.	198.	200.
19	45.0	193.	195.	197.	198.	200.
20	50.0	193.	195.	197.	198.	200.
21	50.0	193.	195.	197.	198.	200.
22	50.0	193.	195.	197.	198.	200.
23	55.0	193.	195.	197.	198.	200.
24	60.0	193.	195.	197.	198.	200.
25	60.0	193.	195.	197.	198.	200.
26	60.0	193.	195.	197.	198.	200.
27	65.0	193.	195.	197.	198.	200.
28	70.0	193.	195.	197.	198.	200.
29	70.0	193.	195.	197.	198.	200.
30	70.0	193.	195.	197.	198.	200.
31	75.0	193.	195.	197.	198.	200.
32	80.0	193.	195.	197.	198.	200.
33	80.0	193.	195.	197.	198.	200.
34	80.0	193.	195.	197.	198.	200.
35	85.0	193.	195.	197.	198.	200.
36	90.0	193.	195.	197.	198.	200.
37	90.0	193.	195.	197.	198.	200.
38	90.0	193.	195.	197.	198.	200.
39	95.0	193.	195.	197.	198.	200.
40	100.0	193.	195.	197.	198.	200.
41	100.0	193.	195.	197.	198.	200.
42	100.0	193.	195.	197.	198.	200.
43	105.0	193.	195.	197.	198.	200.
44	110.0	193.	195.	197.	198.	200.
45	110.0	193.	195.	197.	198.	200.
46	110.0	193.	195.	197.	198.	200.
47	115.0	193.	195.	197.	198.	200.
48	120.0	193.	195.	197.	198.	200.
49	120.0	193.	195.	197.	198.	200.
50	120.0	193.	195.	197.	198.	200.
51	125.0	193.	195.	197.	198.	200.
52	130.0	193.	195.	197.	198.	200.
53	130.0	193.	195.	197.	198.	200.
54	130.0	193.	195.	197.	198.	200.
55	135.0	193.	195.	197.	198.	200.
56	140.0	193.	195.	197.	198.	200.
57	140.0	193.	195.	197.	198.	200.
58	140.0	193.	195.	197.	198.	200.
59	145.0	193.	195.	197.	198.	200.
60	150.0	193.	195.	197.		

Figure 5-22 (Cont.)

61	150.0	193.	195.	197.	198.	200.
62	150.0	193.	195.	197.	198.	200.
63	155.0	193.	195.	197.	198.	200.
64	160.0	193.	195.	197.	198.	200.
65	160.0	193.	195.	197.	198.	200.
66	160.0	193.	195.	197.	198.	200.
67	165.0	193.	195.	197.	198.	200.
68	170.0	193.	195.	197.	198.	200.
69	170.0	193.	195.	197.	198.	200.
70	170.0	193.	195.	197.	198.	200.
71	175.0	193.	195.	197.	198.	200.
72	180.0	193.	195.	197.	198.	200.
73	180.0	193.	195.	197.	198.	200.
74	180.0	193.	195.	197.	198.	200.
75	185.0	193.	195.	197.	198.	200.
76	190.0	193.	195.	197.	198.	200.
77	190.0	193.	195.	197.	198.	200.
78	190.0	193.	195.	197.	198.	200.
79	195.0	193.	195.	197.	198.	200.
80	200.0	193.	195.	197.	198.	200.
81	200.0	193.	195.	197.	198.	200.
82	200.0	193.	195.	197.	198.	200.
83	205.0	193.	195.	197.	198.	200.
84	210.0	193.	195.	197.	198.	200.
85	210.0	193.	195.	197.	198.	200.
86	210.0	193.	195.	197.	198.	200.
87	215.0	193.	195.	197.	198.	200.
88	220.0	193.	195.	197.	198.	200.
89	220.0	193.	195.	197.	198.	200.
90	220.0	193.	195.	197.	198.	200.
91	225.0	193.	195.	197.	198.	200.
92	230.0	193.	195.	197.	198.	200.
93	230.0	193.	195.	197.	198.	200.
94	230.0	193.	195.	197.	198.	200.
95	235.0	193.	195.	197.	198.	200.
96	240.0	193.	195.	197.	198.	200.
97	240.0	193.	195.	197.	198.	200.
98	240.0	193.	195.	197.	198.	200.
99	245.0	193.	195.	197.	198.	200.
100	250.0	193.	195.	197.	198.	200.
101	250.0	193.	195.	197.	198.	200.
102	250.0	193.	195.	197.	198.	200.
103	255.0	193.	195.	197.	198.	200.
104	260.0	193.	195.	197.	198.	200.
105	260.0	193.	195.	197.	198.	200.
106	260.0	193.	195.	197.	198.	200.
107	265.0	193.	195.	197.	198.	200.
108	270.0	193.	195.	197.	198.	200.
109	270.0	193.	195.	197.	198.	200.
110	270.0	193.	195.	197.	198.	200.
111	275.0	193.	195.	197.	198.	200.
112	280.0	193.	195.	197.	198.	200.
113	280.0	193.	195.	197.	198.	200.
114	280.0	193.	195.	197.	198.	200.
115	285.0	193.	195.	197.	198.	200.
116	290.0	193.	195.	197.	198.	200.
117	290.0	193.	195.	197.	198.	200.
118	290.0	193.	195.	197.	198.	200.
119	295.0	193.	195.	197.	198.	200.
120	300.0	193.	195.	197.	198.	200.
121	300.0	193.	195.	197.	198.	200.
122	300.0	193.	195.	197.	198.	200.
123	305.0	193.	195.	197.	198.	200.
124	310.0	193.	195.	197.	198.	200.
125	310.0	193.	195.	197.	198.	200.
126	310.0	193.	195.	197.	198.	200.

127	315.0	193.	195.	197.	198.	200.
128	320.0	193.	195.	197.	198.	200.
129	320.0	193.	195.	197.	198.	200.
130	320.0	193.	195.	197.	198.	200.
131	325.0	193.	195.	197.	198.	200.
132	330.0	193.	195.	197.	198.	200.
133	330.0	193.	195.	197.	198.	200.
134	330.0	193.	195.	197.	198.	200.
135	335.0	193.	195.	197.	198.	200.
136	340.0	193.	195.	197.	198.	200.
137	340.0	193.	195.	197.	198.	200.
138	340.0	193.	195.	197.	198.	200.
139	345.0	193.	195.	197.	198.	200.
140	350.0	193.	195.	197.	198.	200.
141	350.0	193.	195.	197.	198.	200.
142	350.0	193.	195.	197.	198.	200.
143	355.0	193.	195.	197.	198.	200.
144	360.0	193.	195.	197.	198.	200.
145	360.0	193.	195.	197.	198.	200.

```
MIN. PRESS=  0.00000E+00  AT   360.00      DEGREES

MAX. PRESS=  200.00       AT   360.00      DEGREES


HYDROSTATIC SOURCE SEAL
  GFACE

  -JOURNAL POSITION & FORCES

    MINIMUM CLEARANCE      =    0.000500 IN
    LOAD CAPACITY          =   6588.     LB
    MOMENT ABOUT X-X       =  0.9286E-09 IN-LB
    MOMENT ABOUT Y-Y       = -0.8015E-09 IN-LB

    POWER LOSS             =  0.0000E+00 HP

    LEAKAGE AT INNER       = -0.1165E-02 LB/S
    LEAKAGE AT OUTER       = -0.1727E-03 LB/S

  -STIFFNESS COEFFICIENTS
    PRINCIPAL  Z      KZZ =  0.1722E+07 LB/IN
    CROSS-COUPLED     KZA =   410.1     LB/RAD
    CROSS-COUPLED     KZB =   410.1     LB/RAD
    CROSS-COUPLED     KAZ = -0.2244E-03 IN-LB/IN
    PRINCIPAL  A      KAA =  0.2562E+07 IN-LB/RAD
    CROSS-COUPLED     KAB =  0.6152E-03 IN-LB/RAD
    CROSS-COUPLED     KBZ = -0.1138E-03 IN-LB/IN
    CROSS-COUPLED     KBA =  0.1788E-02 IN-LB/RAD
    PRINCIPAL  B      KBB =  0.2562E+07 IN-LB/RAD

  -DAMPING COEFFICIENTS
    PRINCIPAL  Z      DZZ =   4538.     LB-S/IN
    CROSS-COUPLED     DZA = -0.1395     LB-S/RAD
    CROSS-COUPLED     DZB = -0.1395     LB-S/RAD
    CROSS-COUPLED     DAZ =  0.8589E-07 IN-LB-S/IN
    PRINCIPAL  A      DAA =  0.2322E+05 IN-LB-S/RAD
    CROSS-COUPLED     DAB = -0.2646E-06 IN-LB-S/RAD
    CROSS-COUPLED     DBZ =  0.2733E-10 IN-LB-S/IN
    CROSS-COUPLED     DBA = -0.7288E-06 IN-LB-S/RAD
    PRINCIPAL  B      DBB =  0.2322E+05 IN-LB-S/RAD


HYDROSTATIC SOURCE SEAL
  GFACE
```

Figure 5-22 (Cont.)

```
 ECHO OF INPUT

NO MORE INPUT, PROGRAM TERMINATED
```

Figure 5-22 (Cont.)

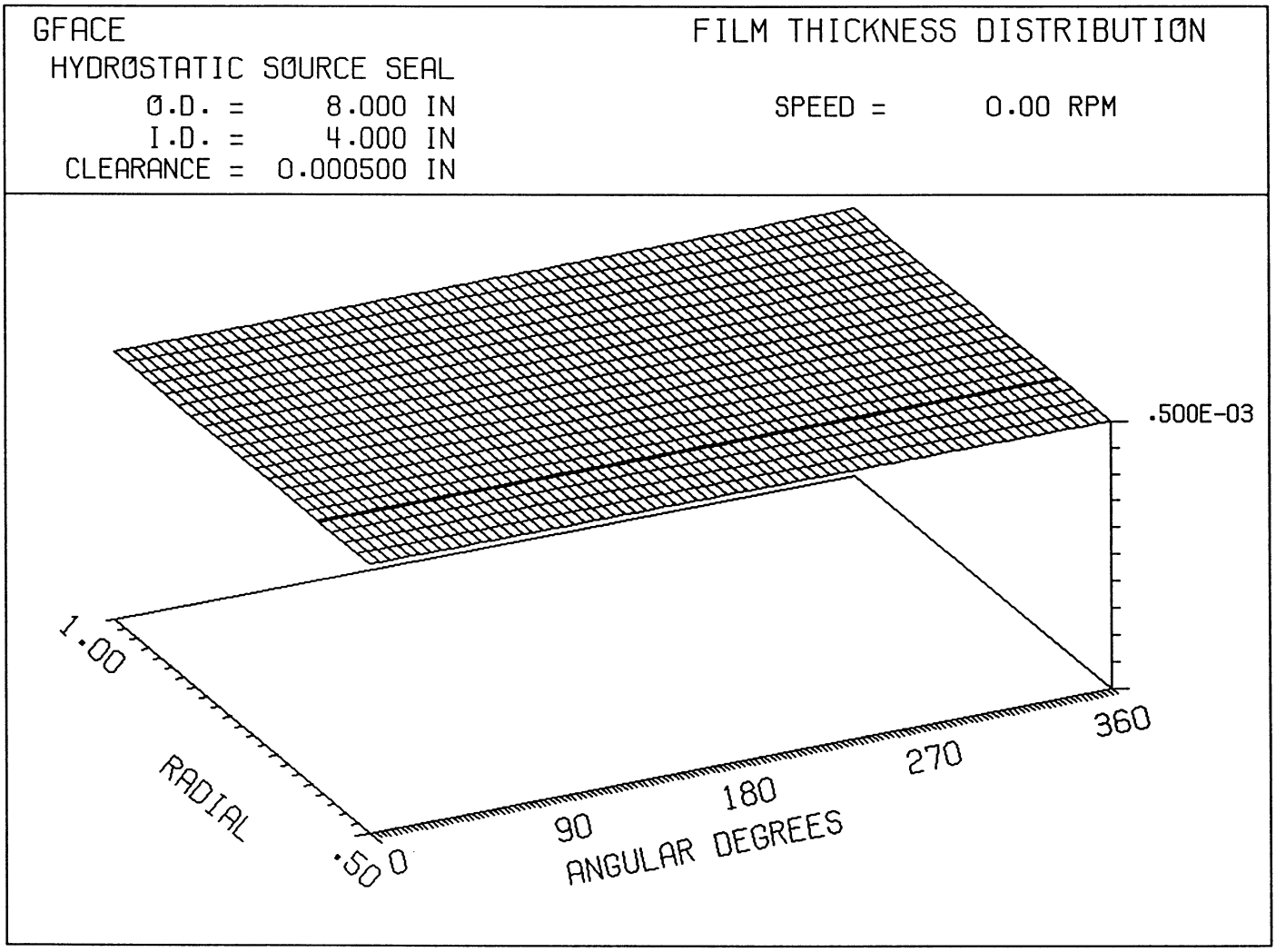

Figure 5-23 Sample Problem 6, Inherently Compensated Seal, Clearance Distribution

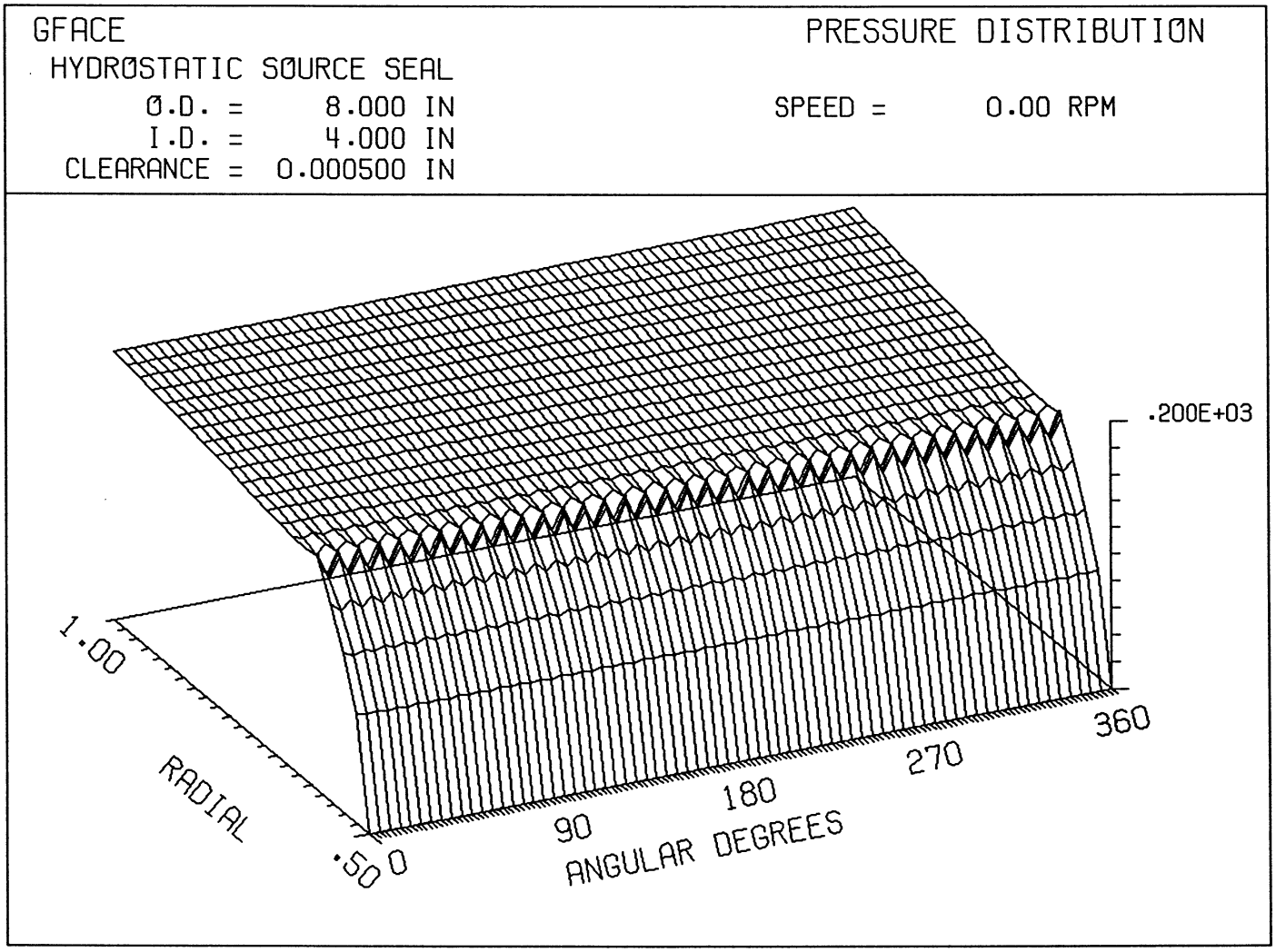

Figure 5-24 Sample Problem 6, Inherently Compensated Seal, Pressure Distribution

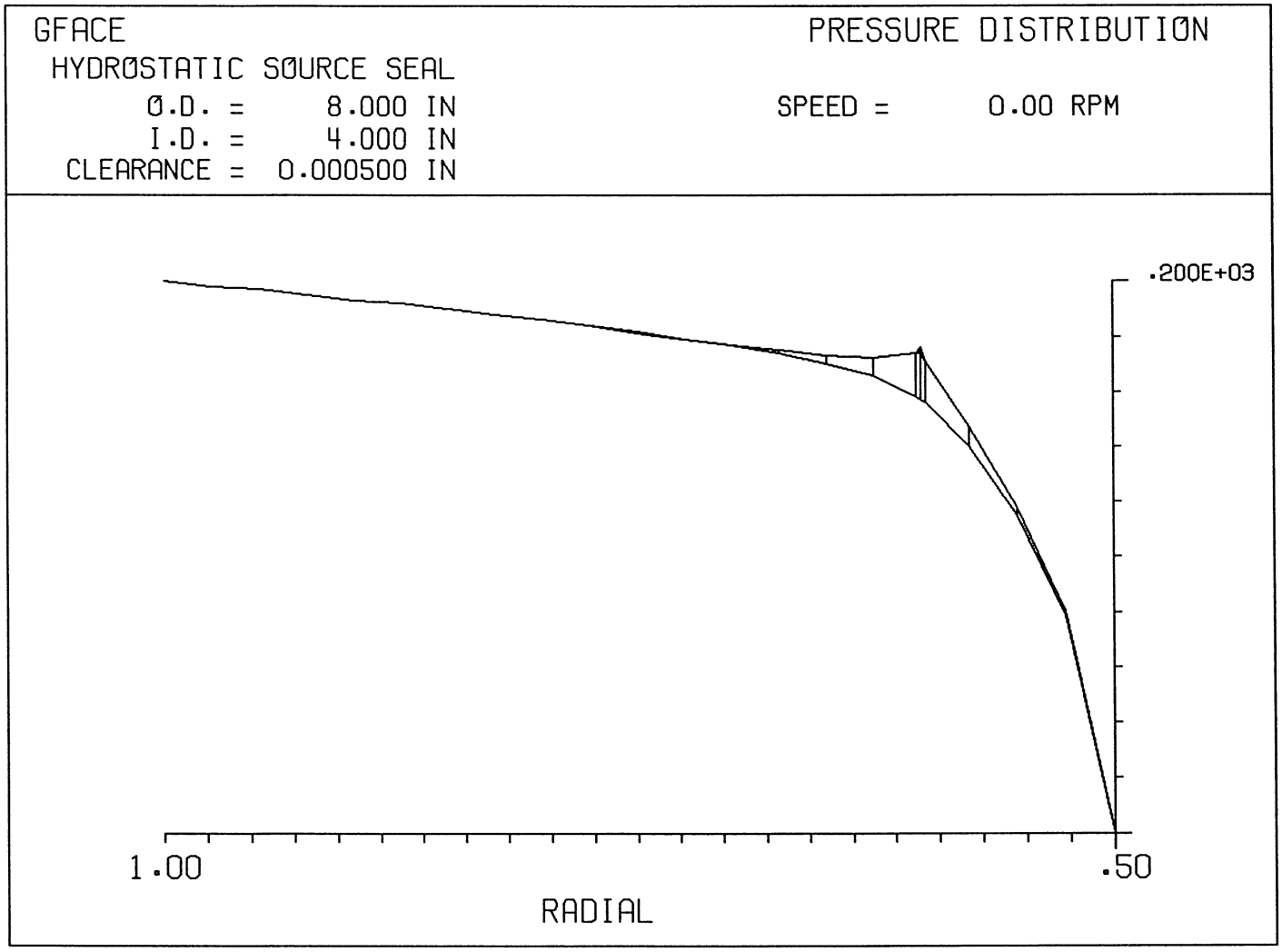

Figure 5-25 Sample Problem 6, Inherently Compensated Seal, Pressure Distribution Along Radius

5.7 Radial Taper Seal

A seal with an inside radial taper was analyzed. The following input parameters were applied:

TAPER	13	0.1833	1

The word TAPER in colums 1-10 indicate a radial tapered seal is being analyzed. The number 13 corresponds to the radial grid number where the taper begins or ends (for an inside taper). The following number 0.1833 is the slope of the taper. The final number,1 indicates that the taper is located at the inside radius. The taper slope is such to produce a maximum axial distance from the surface of 0.0004 in. The seal has an inner diameter of 1 inch and an outer diamete of 1.5 inches. The high pressure at the inner radius is 400 psig. The sealed gas is air and the land clearance is 0.0004 in. The input file is shown on Fig. 5-26 and the output file is Fig. 5-27. Clearance and pressure plots are shown on Figures 5-28 and 5-29.

08/31/1993 10:07 Filename: RTAPER.INP Page 1

```
RTAPER
INSIDE RADIAL TAPERED LAND
*
NPAD          1
OPTION        1.
*
STIFFNESS     30000.
INNER      1.0
OUTER      1.5
*
CLEARANCE    0.0004
START      0.0
PADANGLE   360.0
GRIDN      72.
GRIDM      25.
JOINED
TAPER      13  0.1833  1
SPHEAT       1.4
GASCONST     2.55488E5
ABSTEMP      520.
VISCOSITY    0.25E-8
TOLERA        0.01
SPEED        30000.
PO            14.7
PLEFT          0.
PRITE          0.
PTOP           0.
PBOT           400.0
END
```

Figure 5-26 Sample Problem 7, Radial Tapered Seal, Input File

```
08/31/1993  10:17        Filename: RTAPER.OUT                          Page   1


INSIDE RADIAL TAPERED LAND
  GFACE

  ECHO OF INPUT

  *
  NPAD       =    1          NUMBER OF PADS
  OPTION     =    1          GIVEN CLEARANCE FIND LOAD CAPACITY
  *
  ISTIF      =    1          STIFFNESS CALCULATION
  EXCITATION SPEED, RPM  =   30000.0000
  INNER DIA =    1.0000      INNER DIAMETER
  OUTER DIA =    1.5000      OUTER DIAMETER
  *
  CLEARANCE =  0.000400      BEARING CLEARANCE
  START     =      0.00      STARTING ANGLE OF PAD # 1
  PAD ANGLE =    360.00          PAD ANGLE OF PAD # 1
  GRIDN     =   72          GRID POINTS IN CIRCUMFERENTIAL DIRECTION
  GRIDM     =   25          GRID POINTS IN RADIAL DIRECTION
  JOINED BOUNDARY
  TAPERED LAND - RADIAL (INSIDE)
  TAPER     =  13.          TAPER START AT I LOCATION
            =    0.1833     SLOPE OF TAPER
  SPECIFIC  =    1.4000     SPECIFIC HEAT RATIO
  GAS CONST =  255488.0     GAS CONSTANT
  ABS TEMP  =    520.00     ABSOLUTE TEMPERATURE
  VISCOSITY =  0.2500E-08   ABSOLUTE VISCOSITY
  TOL1      =    0.0100     TOLERANCE(COMPRESSIBILITY)
  TOL2      =    0.0000     ITERATION(OPTION 2)
  SPEED     =  30000.00     ROTATIONAL SPEED IN RPM
  PO        =     14.70     REFERENCE(AMBIENT)  PRESSURE
  PLEFT     =      0.00     GAGE PRESSURE AT LEFT BOUNDARY
  PRITE     =      0.00     GAGE PRESSURE AT RIGHT BOUNDARY
  PTOP      =      0.00     GAGE PRESSURE AT TOP BOUNDARY
  PBOT      =    400.00     GAGE PRESSURE AT BOTTOM BOUNDARY


INSIDE RADIAL TAPERED LAND
  GFACE

  GAS THRUST BEARING/SEAL


  -BEARING GEOMETRY
   NUMBER OF PADS =    1
   OUTER DIAMETER =     1.500 IN
   INNER DIAMETER =     1.000 IN
        CLEARANCE =  0.000400 IN
   STARTING ANGLE =      0.00 DEG
        PAD ANGLE =    360.00 DEG

  -SPECIAL FILM THICKNESS SPECIFICATION
  TAPER START   J =  13.      NODE NUMBER
           AMOUNT =    0.1833 DEG

  -LUBRICANT PROPERTIES
                VISCOSITY =  0.2500000E-08 LB-S/IN**2
            GAS CONSTANT =   255488.0     IN**2/S**2-R
        ABS. TEMPERATURE =   520.0000     DEG R

  -BOUNDARY CONDITIONS
      REFERENCE P =   14.70000     PSI
            PLEFT =  0.0000000E+00 PSI
            PRITE =  0.0000000E+00 PSI
```

```
08/31/1993  10:17        Filename: RTAPER.OUT                          Page   2

            PTOP =  0.0000000E+00 PSI
            PBOT =   400.0000     PSI
           SPEED =   30000.00     RPM

  -BEARING MODEL
                M =   25
                N =   72
           JOINED =    T

   DZ
   0.139E-01 0.139E-01 0.139E-01 0.139E-01 0.139E-01
   0.139E-01 0.139E-01 0.139E-01 0.139E-01 0.139E-01
   0.139E-01 0.139E-01 0.139E-01 0.139E-01 0.139E-01
   0.139E-01 0.139E-01 0.139E-01 0.139E-01 0.139E-01
   0.139E-01 0.139E-01 0.139E-01 0.139E-01 0.139E-01

   DTHETA
   0.885E-01 0.885E-01 0.885E-01 0.885E-01 0.885E-01
   0.885E-01 0.885E-01 0.885E-01 0.885E-01 0.885E-01
   0.885E-01 0.885E-01 0.885E-01 0.885E-01 0.885E-01
   0.885E-01 0.885E-01 0.885E-01 0.885E-01 0.885E-01
   0.885E-01 0.885E-01 0.885E-01 0.885E-01 0.885E-01
   0.885E-01 0.885E-01 0.885E-01 0.885E-01 0.885E-01
   0.885E-01 0.885E-01 0.885E-01 0.885E-01 0.885E-01
   0.885E-01 0.885E-01 0.885E-01 0.885E-01 0.885E-01
   0.885E-01 0.885E-01 0.885E-01 0.885E-01 0.885E-01
   0.885E-01 0.885E-01 0.885E-01 0.885E-01 0.885E-01
   0.885E-01 0.885E-01 0.885E-01 0.885E-01 0.885E-01
   0.885E-01 0.885E-01 0.885E-01 0.885E-01 0.885E-01
   0.885E-01 0.885E-01 0.885E-01 0.885E-01 0.885E-01
   0.885E-01 0.885E-01 0.885E-01 0.885E-01 0.885E-01
   0.885E-01 0.885E-01

INSIDE RADIAL TAPERED LAND
  GFACE

  -MAXIMUM NUMBER OF ITERATIONS
     MXIT1 =   10       (FOR COMPRESSIBILITY)
     MXIT2 =    5       (FOR OPTION 2)

  -TOLERANCE
      TOL1 =   0.01000  (FOR COMPRESSIBILITY)
      TOL2 =   0.01000  (FOR OPTION 2)

  -OPTION  =    1       GIVEN CLEARANCE  FIND LOAD CAPACITY
```

Figure 5-27 Sample Problem 7, Radial Tapered Seal, Output File

08/31/1993 10:17 Filename: RTAPER.OUT Page 3

NON-DIM CLEARANCE DISTRIBUTION(H/C) FOR PAD NUMBER 1

	I =	1	2	3	4	5	6
	AXIAL LENGTH IN.	0.500	0.510	0.521	0.531	0.542	0.552
J	DEG.						
1	0.0	2.00	1.92	1.83	1.75	1.67	1.58
2	5.1	2.00	1.92	1.83	1.75	1.67	1.58
3	10.1	2.00	1.92	1.83	1.75	1.67	1.58
4	15.2	2.00	1.92	1.83	1.75	1.67	1.58
5	20.3	2.00	1.92	1.83	1.75	1.67	1.58
6	25.4	2.00	1.92	1.83	1.75	1.67	1.58
7	30.4	2.00	1.92	1.83	1.75	1.67	1.58
8	35.5	2.00	1.92	1.83	1.75	1.67	1.58
9	40.6	2.00	1.92	1.83	1.75	1.67	1.58
10	45.6	2.00	1.92	1.83	1.75	1.67	1.58
11	50.7	2.00	1.92	1.83	1.75	1.67	1.58
12	55.8	2.00	1.92	1.83	1.75	1.67	1.58
13	60.8	2.00	1.92	1.83	1.75	1.67	1.58
14	65.9	2.00	1.92	1.83	1.75	1.67	1.58
15	71.0	2.00	1.92	1.83	1.75	1.67	1.58
16	76.1	2.00	1.92	1.83	1.75	1.67	1.58
17	81.1	2.00	1.92	1.83	1.75	1.67	1.58
18	86.2	2.00	1.92	1.83	1.75	1.67	1.58
19	91.3	2.00	1.92	1.83	1.75	1.67	1.58
20	96.3	2.00	1.92	1.83	1.75	1.67	1.58
21	101.4	2.00	1.92	1.83	1.75	1.67	1.58
22	106.5	2.00	1.92	1.83	1.75	1.67	1.58
23	111.5	2.00	1.92	1.83	1.75	1.67	1.58
24	116.6	2.00	1.92	1.83	1.75	1.67	1.58
25	121.7	2.00	1.92	1.83	1.75	1.67	1.58
26	126.8	2.00	1.92	1.83	1.75	1.67	1.58
27	131.8	2.00	1.92	1.83	1.75	1.67	1.58
28	136.9	2.00	1.92	1.83	1.75	1.67	1.58
29	142.0	2.00	1.92	1.83	1.75	1.67	1.58
30	147.0	2.00	1.92	1.83	1.75	1.67	1.58
31	152.1	2.00	1.92	1.83	1.75	1.67	1.58
32	157.2	2.00	1.92	1.83	1.75	1.67	1.58
33	162.3	2.00	1.92	1.83	1.75	1.67	1.58
34	167.3	2.00	1.92	1.83	1.75	1.67	1.58
35	172.4	2.00	1.92	1.83	1.75	1.67	1.58
36	177.5	2.00	1.92	1.83	1.75	1.67	1.58
37	182.5	2.00	1.92	1.83	1.75	1.67	1.58
38	187.6	2.00	1.92	1.83	1.75	1.67	1.58
39	192.7	2.00	1.92	1.83	1.75	1.67	1.58
40	197.7	2.00	1.92	1.83	1.75	1.67	1.58
41	202.8	2.00	1.92	1.83	1.75	1.67	1.58
42	207.9	2.00	1.92	1.83	1.75	1.67	1.58
43	213.0	2.00	1.92	1.83	1.75	1.67	1.58
44	218.0	2.00	1.92	1.83	1.75	1.67	1.58
45	223.1	2.00	1.92	1.83	1.75	1.67	1.58
46	228.2	2.00	1.92	1.83	1.75	1.67	1.58
47	233.2	2.00	1.92	1.83	1.75	1.67	1.58
48	238.3	2.00	1.92	1.83	1.75	1.67	1.58
49	243.4	2.00	1.92	1.83	1.75	1.67	1.58
50	248.5	2.00	1.92	1.83	1.75	1.67	1.58
51	253.5	2.00	1.92	1.83	1.75	1.67	1.58
52	258.6	2.00	1.92	1.83	1.75	1.67	1.58
53	263.7	2.00	1.92	1.83	1.75	1.67	1.58
54	268.7	2.00	1.92	1.83	1.75	1.67	1.58
55	273.8	2.00	1.92	1.83	1.75	1.67	1.58
56	278.9	2.00	1.92	1.83	1.75	1.67	1.58
57	283.9	2.00	1.92	1.83	1.75	1.67	1.58
58	289.0	2.00	1.92	1.83	1.75	1.67	1.58
59	294.1	2.00	1.92	1.83	1.75	1.67	1.58

08/31/1993 10:17 Filename: RTAPER.OUT Page 4

60	299.2	2.00	1.92	1.83	1.75	1.67	1.58
61	304.2	2.00	1.92	1.83	1.75	1.67	1.58
62	309.3	2.00	1.92	1.83	1.75	1.67	1.58
63	314.4	2.00	1.92	1.83	1.75	1.67	1.58
64	319.4	2.00	1.92	1.83	1.75	1.67	1.58
65	324.5	2.00	1.92	1.83	1.75	1.67	1.58
66	329.6	2.00	1.92	1.83	1.75	1.67	1.58
67	334.6	2.00	1.92	1.83	1.75	1.67	1.58
68	339.7	2.00	1.92	1.83	1.75	1.67	1.58
69	344.8	2.00	1.92	1.83	1.75	1.67	1.58
70	349.9	2.00	1.92	1.83	1.75	1.67	1.58
71	354.9	2.00	1.92	1.83	1.75	1.67	1.58
72	360.0	2.00	1.92	1.83	1.75	1.67	1.58

Figure 5-27 (Cont.)

NON-DIM CLEARANCE DISTRIBUTION(H/C) FOR PAD NUMBER 1

	I =	7	8	9	10	11	12
	AXIAL LENGTH IN.	0.562	0.573	0.583	0.594	0.604	0.615
J	DEG.						
1	0.0	1.50	1.42	1.33	1.25	1.17	1.08
2	5.1	1.50	1.42	1.33	1.25	1.17	1.08
3	10.1	1.50	1.42	1.33	1.25	1.17	1.08
4	15.2	1.50	1.42	1.33	1.25	1.17	1.08
5	20.3	1.50	1.42	1.33	1.25	1.17	1.08
6	25.4	1.50	1.42	1.33	1.25	1.17	1.08
7	30.4	1.50	1.42	1.33	1.25	1.17	1.08
8	35.5	1.50	1.42	1.33	1.25	1.17	1.08
9	40.6	1.50	1.42	1.33	1.25	1.17	1.08
10	45.6	1.50	1.42	1.33	1.25	1.17	1.08
11	50.7	1.50	1.42	1.33	1.25	1.17	1.08
12	55.8	1.50	1.42	1.33	1.25	1.17	1.08
13	60.8	1.50	1.42	1.33	1.25	1.17	1.08
14	65.9	1.50	1.42	1.33	1.25	1.17	1.08
15	71.0	1.50	1.42	1.33	1.25	1.17	1.08
16	76.1	1.50	1.42	1.33	1.25	1.17	1.08
17	81.1	1.50	1.42	1.33	1.25	1.17	1.08
18	86.2	1.50	1.42	1.33	1.25	1.17	1.08
19	91.3	1.50	1.42	1.33	1.25	1.17	1.08
20	96.3	1.50	1.42	1.33	1.25	1.17	1.08
21	101.4	1.50	1.42	1.33	1.25	1.17	1.08
22	106.5	1.50	1.42	1.33	1.25	1.17	1.08
23	111.5	1.50	1.42	1.33	1.25	1.17	1.08
24	116.6	1.50	1.42	1.33	1.25	1.17	1.08
25	121.7	1.50	1.42	1.33	1.25	1.17	1.08
26	126.8	1.50	1.42	1.33	1.25	1.17	1.08
27	131.8	1.50	1.42	1.33	1.25	1.17	1.08
28	136.9	1.50	1.42	1.33	1.25	1.17	1.08
29	142.0	1.50	1.42	1.33	1.25	1.17	1.08
30	147.0	1.50	1.42	1.33	1.25	1.17	1.08
31	152.1	1.50	1.42	1.33	1.25	1.17	1.08
32	157.2	1.50	1.42	1.33	1.25	1.17	1.08
33	162.3	1.50	1.42	1.33	1.25	1.17	1.08
34	167.3	1.50	1.42	1.33	1.25	1.17	1.08
35	172.4	1.50	1.42	1.33	1.25	1.17	1.08
36	177.5	1.50	1.42	1.33	1.25	1.17	1.08
37	182.5	1.50	1.42	1.33	1.25	1.17	1.08
38	187.6	1.50	1.42	1.33	1.25	1.17	1.08
39	192.7	1.50	1.42	1.33	1.25	1.17	1.08
40	197.7	1.50	1.42	1.33	1.25	1.17	1.08
41	202.8	1.50	1.42	1.33	1.25	1.17	1.08
42	207.9	1.50	1.42	1.33	1.25	1.17	1.08
43	213.0	1.50	1.42	1.33	1.25	1.17	1.08
44	218.0	1.50	1.42	1.33	1.25	1.17	1.08
45	223.1	1.50	1.42	1.33	1.25	1.17	1.08
46	228.2	1.50	1.42	1.33	1.25	1.17	1.08
47	233.2	1.50	1.42	1.33	1.25	1.17	1.08
48	238.3	1.50	1.42	1.33	1.25	1.17	1.08
49	243.4	1.50	1.42	1.33	1.25	1.17	1.08
50	248.5	1.50	1.42	1.33	1.25	1.17	1.08
51	253.5	1.50	1.42	1.33	1.25	1.17	1.08
52	258.6	1.50	1.42	1.33	1.25	1.17	1.08
53	263.7	1.50	1.42	1.33	1.25	1.17	1.08
54	268.7	1.50	1.42	1.33	1.25	1.17	1.08
55	273.8	1.50	1.42	1.33	1.25	1.17	1.08
56	278.9	1.50	1.42	1.33	1.25	1.17	1.08
57	283.9	1.50	1.42	1.33	1.25	1.17	1.08
58	289.0	1.50	1.42	1.33	1.25	1.17	1.08
59	294.1	1.50	1.42	1.33	1.25	1.17	1.08

60	299.2	1.50	1.42	1.33	1.25	1.17	1.08
61	304.2	1.50	1.42	1.33	1.25	1.17	1.08
62	309.3	1.50	1.42	1.33	1.25	1.17	1.08
63	314.4	1.50	1.42	1.33	1.25	1.17	1.08
64	319.4	1.50	1.42	1.33	1.25	1.17	1.08
65	324.5	1.50	1.42	1.33	1.25	1.17	1.08
66	329.6	1.50	1.42	1.33	1.25	1.17	1.08
67	334.6	1.50	1.42	1.33	1.25	1.17	1.08
68	339.7	1.50	1.42	1.33	1.25	1.17	1.08
69	344.8	1.50	1.42	1.33	1.25	1.17	1.08
70	349.9	1.50	1.42	1.33	1.25	1.17	1.08
71	354.9	1.50	1.42	1.33	1.25	1.17	1.08
72	360.0	1.50	1.42	1.33	1.25	1.17	1.08

Figure 5-27 (Cont.)

NON-DIM CLEARANCE DISTRIBUTION(H/C) FOR PAD NUMBER 1

	I =	13	14	15	16	17	18
	AXIAL LENGTH IN.	0.625	0.635	0.646	0.656	0.667	0.677
J	DEG.						
1	0.0	1.00	1.00	1.00	1.00	1.00	1.00
2	5.1	1.00	1.00	1.00	1.00	1.00	1.00
3	10.1	1.00	1.00	1.00	1.00	1.00	1.00
4	15.2	1.00	1.00	1.00	1.00	1.00	1.00
5	20.3	1.00	1.00	1.00	1.00	1.00	1.00
6	25.4	1.00	1.00	1.00	1.00	1.00	1.00
7	30.4	1.00	1.00	1.00	1.00	1.00	1.00
8	35.5	1.00	1.00	1.00	1.00	1.00	1.00
9	40.6	1.00	1.00	1.00	1.00	1.00	1.00
10	45.6	1.00	1.00	1.00	1.00	1.00	1.00
11	50.7	1.00	1.00	1.00	1.00	1.00	1.00
12	55.8	1.00	1.00	1.00	1.00	1.00	1.00
13	60.8	1.00	1.00	1.00	1.00	1.00	1.00
14	65.9	1.00	1.00	1.00	1.00	1.00	1.00
15	71.0	1.00	1.00	1.00	1.00	1.00	1.00
16	76.1	1.00	1.00	1.00	1.00	1.00	1.00
17	81.1	1.00	1.00	1.00	1.00	1.00	1.00
18	86.2	1.00	1.00	1.00	1.00	1.00	1.00
19	91.3	1.00	1.00	1.00	1.00	1.00	1.00
20	96.3	1.00	1.00	1.00	1.00	1.00	1.00
21	101.4	1.00	1.00	1.00	1.00	1.00	1.00
22	106.5	1.00	1.00	1.00	1.00	1.00	1.00
23	111.5	1.00	1.00	1.00	1.00	1.00	1.00
24	116.6	1.00	1.00	1.00	1.00	1.00	1.00
25	121.7	1.00	1.00	1.00	1.00	1.00	1.00
26	126.8	1.00	1.00	1.00	1.00	1.00	1.00
27	131.8	1.00	1.00	1.00	1.00	1.00	1.00
28	136.9	1.00	1.00	1.00	1.00	1.00	1.00
29	142.0	1.00	1.00	1.00	1.00	1.00	1.00
30	147.0	1.00	1.00	1.00	1.00	1.00	1.00
31	152.1	1.00	1.00	1.00	1.00	1.00	1.00
32	157.2	1.00	1.00	1.00	1.00	1.00	1.00
33	162.3	1.00	1.00	1.00	1.00	1.00	1.00
34	167.3	1.00	1.00	1.00	1.00	1.00	1.00
35	172.4	1.00	1.00	1.00	1.00	1.00	1.00
36	177.5	1.00	1.00	1.00	1.00	1.00	1.00
37	182.5	1.00	1.00	1.00	1.00	1.00	1.00
38	187.6	1.00	1.00	1.00	1.00	1.00	1.00
39	192.7	1.00	1.00	1.00	1.00	1.00	1.00
40	197.7	1.00	1.00	1.00	1.00	1.00	1.00
41	202.8	1.00	1.00	1.00	1.00	1.00	1.00
42	207.9	1.00	1.00	1.00	1.00	1.00	1.00
43	213.0	1.00	1.00	1.00	1.00	1.00	1.00
44	218.0	1.00	1.00	1.00	1.00	1.00	1.00
45	223.1	1.00	1.00	1.00	1.00	1.00	1.00
46	228.2	1.00	1.00	1.00	1.00	1.00	1.00
47	233.2	1.00	1.00	1.00	1.00	1.00	1.00
48	238.3	1.00	1.00	1.00	1.00	1.00	1.00
49	243.4	1.00	1.00	1.00	1.00	1.00	1.00
50	248.5	1.00	1.00	1.00	1.00	1.00	1.00
51	253.5	1.00	1.00	1.00	1.00	1.00	1.00
52	258.6	1.00	1.00	1.00	1.00	1.00	1.00
53	263.7	1.00	1.00	1.00	1.00	1.00	1.00
54	268.7	1.00	1.00	1.00	1.00	1.00	1.00
55	273.8	1.00	1.00	1.00	1.00	1.00	1.00
56	278.9	1.00	1.00	1.00	1.00	1.00	1.00
57	283.9	1.00	1.00	1.00	1.00	1.00	1.00
58	289.0	1.00	1.00	1.00	1.00	1.00	1.00
59	294.1	1.00	1.00	1.00	1.00	1.00	1.00

60	299.2	1.00	1.00	1.00	1.00	1.00	1.00
61	304.2	1.00	1.00	1.00	1.00	1.00	1.00
62	309.3	1.00	1.00	1.00	1.00	1.00	1.00
63	314.4	1.00	1.00	1.00	1.00	1.00	1.00
64	319.4	1.00	1.00	1.00	1.00	1.00	1.00
65	324.5	1.00	1.00	1.00	1.00	1.00	1.00
66	329.6	1.00	1.00	1.00	1.00	1.00	1.00
67	334.6	1.00	1.00	1.00	1.00	1.00	1.00
68	339.7	1.00	1.00	1.00	1.00	1.00	1.00
69	344.8	1.00	1.00	1.00	1.00	1.00	1.00
70	349.9	1.00	1.00	1.00	1.00	1.00	1.00
71	354.9	1.00	1.00	1.00	1.00	1.00	1.00
72	360.0	1.00	1.00	1.00	1.00	1.00	1.00

Figure 5-27 (Cont.)

NON-DIM CLEARANCE DISTRIBUTION(H/C) FOR PAD NUMBER 1

	I =	19	20	21	22	23	24
	AXIAL LENGTH IN.	0.687	0.698	0.708	0.719	0.729	0.740
J	DEG.						
1	0.0	1.00	1.00	1.00	1.00	1.00	1.00
2	5.1	1.00	1.00	1.00	1.00	1.00	1.00
3	10.1	1.00	1.00	1.00	1.00	1.00	1.00
4	15.2	1.00	1.00	1.00	1.00	1.00	1.00
5	20.3	1.00	1.00	1.00	1.00	1.00	1.00
6	25.4	1.00	1.00	1.00	1.00	1.00	1.00
7	30.4	1.00	1.00	1.00	1.00	1.00	1.00
8	35.5	1.00	1.00	1.00	1.00	1.00	1.00
9	40.6	1.00	1.00	1.00	1.00	1.00	1.00
10	45.6	1.00	1.00	1.00	1.00	1.00	1.00
11	50.7	1.00	1.00	1.00	1.00	1.00	1.00
12	55.8	1.00	1.00	1.00	1.00	1.00	1.00
13	60.8	1.00	1.00	1.00	1.00	1.00	1.00
14	65.9	1.00	1.00	1.00	1.00	1.00	1.00
15	71.0	1.00	1.00	1.00	1.00	1.00	1.00
16	76.1	1.00	1.00	1.00	1.00	1.00	1.00
17	81.1	1.00	1.00	1.00	1.00	1.00	1.00
18	86.2	1.00	1.00	1.00	1.00	1.00	1.00
19	91.3	1.00	1.00	1.00	1.00	1.00	1.00
20	96.3	1.00	1.00	1.00	1.00	1.00	1.00
21	101.4	1.00	1.00	1.00	1.00	1.00	1.00
22	106.5	1.00	1.00	1.00	1.00	1.00	1.00
23	111.5	1.00	1.00	1.00	1.00	1.00	1.00
24	116.6	1.00	1.00	1.00	1.00	1.00	1.00
25	121.7	1.00	1.00	1.00	1.00	1.00	1.00
26	126.8	1.00	1.00	1.00	1.00	1.00	1.00
27	131.8	1.00	1.00	1.00	1.00	1.00	1.00
28	136.9	1.00	1.00	1.00	1.00	1.00	1.00
29	142.0	1.00	1.00	1.00	1.00	1.00	1.00
30	147.0	1.00	1.00	1.00	1.00	1.00	1.00
31	152.1	1.00	1.00	1.00	1.00	1.00	1.00
32	157.2	1.00	1.00	1.00	1.00	1.00	1.00
33	162.3	1.00	1.00	1.00	1.00	1.00	1.00
34	167.3	1.00	1.00	1.00	1.00	1.00	1.00
35	172.4	1.00	1.00	1.00	1.00	1.00	1.00
36	177.5	1.00	1.00	1.00	1.00	1.00	1.00
37	182.5	1.00	1.00	1.00	1.00	1.00	1.00
38	187.6	1.00	1.00	1.00	1.00	1.00	1.00
39	192.7	1.00	1.00	1.00	1.00	1.00	1.00
40	197.7	1.00	1.00	1.00	1.00	1.00	1.00
41	202.8	1.00	1.00	1.00	1.00	1.00	1.00
42	207.9	1.00	1.00	1.00	1.00	1.00	1.00
43	213.0	1.00	1.00	1.00	1.00	1.00	1.00
44	218.0	1.00	1.00	1.00	1.00	1.00	1.00
45	223.1	1.00	1.00	1.00	1.00	1.00	1.00
46	228.2	1.00	1.00	1.00	1.00	1.00	1.00
47	233.2	1.00	1.00	1.00	1.00	1.00	1.00
48	238.3	1.00	1.00	1.00	1.00	1.00	1.00
49	243.4	1.00	1.00	1.00	1.00	1.00	1.00
50	248.5	1.00	1.00	1.00	1.00	1.00	1.00
51	253.5	1.00	1.00	1.00	1.00	1.00	1.00
52	258.6	1.00	1.00	1.00	1.00	1.00	1.00
53	263.7	1.00	1.00	1.00	1.00	1.00	1.00
54	268.7	1.00	1.00	1.00	1.00	1.00	1.00
55	273.8	1.00	1.00	1.00	1.00	1.00	1.00
56	278.9	1.00	1.00	1.00	1.00	1.00	1.00
57	283.9	1.00	1.00	1.00	1.00	1.00	1.00
58	289.0	1.00	1.00	1.00	1.00	1.00	1.00
59	294.1	1.00	1.00	1.00	1.00	1.00	1.00

60	299.2	1.00	1.00	1.00	1.00	1.00	1.00
61	304.2	1.00	1.00	1.00	1.00	1.00	1.00
62	309.3	1.00	1.00	1.00	1.00	1.00	1.00
63	314.4	1.00	1.00	1.00	1.00	1.00	1.00
64	319.4	1.00	1.00	1.00	1.00	1.00	1.00
65	324.5	1.00	1.00	1.00	1.00	1.00	1.00
66	329.6	1.00	1.00	1.00	1.00	1.00	1.00
67	334.6	1.00	1.00	1.00	1.00	1.00	1.00
68	339.7	1.00	1.00	1.00	1.00	1.00	1.00
69	344.8	1.00	1.00	1.00	1.00	1.00	1.00
70	349.9	1.00	1.00	1.00	1.00	1.00	1.00
71	354.9	1.00	1.00	1.00	1.00	1.00	1.00
72	360.0	1.00	1.00	1.00	1.00	1.00	1.00

Figure 5-27 (Cont.)

NON-DIM CLEARANCE DISTRIBUTION(H/C) FOR PAD NUMBER 1

I = 25
AXIAL LENGTH IN.
0.750

J	DEG.	
1	0.0	1.00
2	5.1	1.00
3	10.1	1.00
4	15.2	1.00
5	20.3	1.00
6	25.4	1.00
7	30.4	1.00
8	35.5	1.00
9	40.6	1.00
10	45.6	1.00
11	50.7	1.00
12	55.8	1.00
13	60.8	1.00
14	65.9	1.00
15	71.0	1.00
16	76.1	1.00
17	81.1	1.00
18	86.2	1.00
19	91.3	1.00
20	96.3	1.00
21	101.4	1.00
22	106.5	1.00
23	111.5	1.00
24	116.6	1.00
25	121.7	1.00
26	126.8	1.00
27	131.8	1.00
28	136.9	1.00
29	142.0	1.00
30	147.0	1.00
31	152.1	1.00
32	157.2	1.00
33	162.3	1.00
34	167.3	1.00
35	172.4	1.00
36	177.5	1.00
37	182.5	1.00
38	187.6	1.00
39	192.7	1.00
40	197.7	1.00
41	202.8	1.00
42	207.9	1.00
43	213.0	1.00
44	218.0	1.00
45	223.1	1.00
46	228.2	1.00
47	233.2	1.00
48	238.3	1.00
49	243.4	1.00
50	248.5	1.00
51	253.5	1.00
52	258.6	1.00
53	263.7	1.00
54	268.7	1.00
55	273.8	1.00
56	278.9	1.00
57	283.9	1.00
58	289.0	1.00
59	294.1	1.00
60	299.2	1.00

61	304.2	1.00
62	309.3	1.00
63	314.4	1.00
64	319.4	1.00
65	324.5	1.00
66	329.6	1.00
67	334.6	1.00
68	339.7	1.00
69	344.8	1.00
70	349.9	1.00
71	354.9	1.00
72	360.0	1.00

MIN. CLEAR.= 1.0000 AT 360.00 DEGREES

MAX. CLEAR.= 1.9997 AT 360.00 DEGREES

Figure 5-27 (Cont.)

PRESSURE DISTRIBUTION (PSI) FOR PAD NUMBER 1

	I =	1	2	3	4	5	6
	AXIAL LENGTH IN.	0.500	0.510	0.521	0.531	0.542	0.552
J	DEG.						
1	0.0	400.	398.	395.	393.	390.	386.
2	5.1	400.	398.	395.	393.	390.	386.
3	10.1	400.	398.	395.	393.	390.	386.
4	15.2	400.	398.	395.	393.	390.	386.
5	20.3	400.	398.	395.	393.	390.	386.
6	25.4	400.	398.	395.	393.	390.	386.
7	30.4	400.	398.	395.	393.	390.	386.
8	35.5	400.	398.	395.	393.	390.	386.
9	40.6	400.	398.	395.	393.	390.	386.
10	45.6	400.	398.	395.	393.	390.	386.
11	50.7	400.	398.	395.	393.	390.	386.
12	55.8	400.	398.	395.	393.	390.	386.
13	60.8	400.	398.	395.	393.	390.	386.
14	65.9	400.	398.	395.	393.	390.	386.
15	71.0	400.	398.	395.	393.	390.	386.
16	76.1	400.	398.	395.	393.	390.	386.
17	81.1	400.	398.	395.	393.	390.	386.
18	86.2	400.	398.	395.	393.	390.	386.
19	91.3	400.	398.	395.	393.	390.	386.
20	96.3	400.	398.	395.	393.	390.	386.
21	101.4	400.	398.	395.	393.	390.	386.
22	106.5	400.	398.	395.	393.	390.	386.
23	111.5	400.	398.	395.	393.	390.	386.
24	116.6	400.	398.	395.	393.	390.	386.
25	121.7	400.	398.	395.	393.	390.	386.
26	126.8	400.	398.	395.	393.	390.	386.
27	131.8	400.	398.	395.	393.	390.	386.
28	136.9	400.	398.	395.	393.	390.	386.
29	142.0	400.	398.	395.	393.	390.	386.
30	147.0	400.	398.	395.	393.	390.	386.
31	152.1	400.	398.	395.	393.	390.	386.
32	157.2	400.	398.	395.	393.	390.	386.
33	162.3	400.	398.	395.	393.	390.	386.
34	167.3	400.	398.	395.	393.	390.	386.
35	172.4	400.	398.	395.	393.	390.	386.
36	177.5	400.	398.	395.	393.	390.	386.
37	182.5	400.	398.	395.	393.	390.	386.
38	187.6	400.	398.	395.	393.	390.	386.
39	192.7	400.	398.	395.	393.	390.	386.
40	197.7	400.	398.	395.	393.	390.	386.
41	202.8	400.	398.	395.	393.	390.	386.
42	207.9	400.	398.	395.	393.	390.	386.
43	213.0	400.	398.	395.	393.	390.	386.
44	218.0	400.	398.	395.	393.	390.	386.
45	223.1	400.	398.	395.	393.	390.	386.
46	228.2	400.	398.	395.	393.	390.	386.
47	233.2	400.	398.	395.	393.	390.	386.
48	238.3	400.	398.	395.	393.	390.	386.
49	243.4	400.	398.	395.	393.	390.	386.
50	248.5	400.	398.	395.	393.	390.	386.
51	253.5	400.	398.	395.	393.	390.	386.
52	258.6	400.	398.	395.	393.	390.	386.
53	263.7	400.	398.	395.	393.	390.	386.
54	268.7	400.	398.	395.	393.	390.	386.
55	273.8	400.	398.	395.	393.	390.	386.
56	278.9	400.	398.	395.	393.	390.	386.
57	283.9	400.	398.	395.	393.	390.	386.
58	289.0	400.	398.	395.	393.	390.	386.
59	294.1	400.	398.	395.	393.	390.	386.

60	299.2	400.	398.	395.	393.	390.	386.
61	304.2	400.	398.	395.	393.	390.	386.
62	309.3	400.	398.	395.	393.	390.	386.
63	314.4	400.	398.	395.	393.	390.	386.
64	319.4	400.	398.	395.	393.	390.	386.
65	324.5	400.	398.	395.	393.	390.	386.
66	329.6	400.	398.	395.	393.	390.	386.
67	334.6	400.	398.	395.	393.	390.	386.
68	339.7	400.	398.	395.	393.	390.	386.
69	344.8	400.	398.	395.	393.	390.	386.
70	349.9	400.	398.	395.	393.	390.	386.
71	354.9	400.	398.	395.	393.	390.	386.
72	360.0	400.	398.	395.	393.	390.	386.

Figure 5-27 (Cont.)

PRESSURE DISTRIBUTION (PSI) FOR PAD NUMBER 1

	I =	7	8	9	10	11	12
	AXIAL LENGTH IN.	0.562	0.573	0.583	0.594	0.604	0.615
J	DEG.						
1	0.0	382.	377.	371.	364.	355.	345.
2	5.1	382.	377.	371.	364.	355.	345.
3	10.1	382.	377.	371.	364.	355.	345.
4	15.2	382.	377.	371.	364.	355.	345.
5	20.3	382.	377.	371.	364.	355.	345.
6	25.4	382.	377.	371.	364.	355.	345.
7	30.4	382.	377.	371.	364.	355.	345.
8	35.5	382.	377.	371.	364.	355.	345.
9	40.6	382.	377.	371.	364.	355.	345.
10	45.6	382.	377.	371.	364.	355.	345.
11	50.7	382.	377.	371.	364.	355.	345.
12	55.8	382.	377.	371.	364.	355.	345.
13	60.8	382.	377.	371.	364.	355.	345.
14	65.9	382.	377.	371.	364.	355.	345.
15	71.0	382.	377.	371.	364.	355.	345.
16	76.1	382.	377.	371.	364.	355.	345.
17	81.1	382.	377.	371.	364.	355.	345.
18	86.2	382.	377.	371.	364.	355.	345.
19	91.3	382.	377.	371.	364.	355.	345.
20	96.3	382.	377.	371.	364.	355.	345.
21	101.4	382.	377.	371.	364.	355.	345.
22	106.5	382.	377.	371.	364.	355.	345.
23	111.5	382.	377.	371.	364.	355.	345.
24	116.6	382.	377.	371.	364.	355.	345.
25	121.7	382.	377.	371.	364.	355.	345.
26	126.8	382.	377.	371.	364.	355.	345.
27	131.8	382.	377.	371.	364.	355.	345.
28	136.9	382.	377.	371.	364.	355.	345.
29	142.0	382.	377.	371.	364.	355.	345.
30	147.0	382.	377.	371.	364.	355.	345.
31	152.1	382.	377.	371.	364.	355.	345.
32	157.2	382.	377.	371.	364.	355.	345.
33	162.3	382.	377.	371.	364.	355.	345.
34	167.3	382.	377.	371.	364.	355.	345.
35	172.4	382.	377.	371.	364.	355.	345.
36	177.5	382.	377.	371.	364.	355.	345.
37	182.5	382.	377.	371.	364.	355.	345.
38	187.6	382.	377.	371.	364.	355.	345.
39	192.7	382.	377.	371.	364.	355.	345.
40	197.7	382.	377.	371.	364.	355.	345.
41	202.8	382.	377.	371.	364.	355.	345.
42	207.9	382.	377.	371.	364.	355.	345.
43	213.0	382.	377.	371.	364.	355.	345.
44	218.0	382.	377.	371.	364.	355.	345.
45	223.1	382.	377.	371.	364.	355.	345.
46	228.2	382.	377.	371.	364.	355.	345.
47	233.2	382.	377.	371.	364.	355.	345.
48	238.3	382.	377.	371.	364.	355.	345.
49	243.4	382.	377.	371.	364.	355.	345.
50	248.5	382.	377.	371.	364.	355.	345.
51	253.5	382.	377.	371.	364.	355.	345.
52	258.6	382.	377.	371.	364.	355.	345.
53	263.7	382.	377.	371.	364.	355.	345.
54	268.7	382.	377.	371.	364.	355.	345.
55	273.8	382.	377.	371.	364.	355.	345.
56	278.9	382.	377.	371.	364.	355.	345.
57	283.9	382.	377.	371.	364.	355.	345.
58	289.0	382.	377.	371.	364.	355.	345.
59	294.1	382.	377.	371.	364.	355.	345.

60	299.2	382.	377.	371.	364.	355.	345.
61	304.2	382.	377.	371.	364.	355.	345.
62	309.3	382.	377.	371.	364.	355.	345.
63	314.4	382.	377.	371.	364.	355.	345.
64	319.4	382.	377.	371.	364.	355.	345.
65	324.5	382.	377.	371.	364.	355.	345.
66	329.6	382.	377.	371.	364.	355.	345.
67	334.6	382.	377.	371.	364.	355.	345.
68	339.7	382.	377.	371.	364.	355.	345.
69	344.8	382.	377.	371.	364.	355.	345.
70	349.9	382.	377.	371.	364.	355.	345.
71	354.9	382.	377.	371.	364.	355.	345.
72	360.0	382.	377.	371.	364.	355.	345.

Figure 5-27 (Cont.)

PRESSURE DISTRIBUTION (PSI) FOR PAD NUMBER 1

	I =	13	14	15	16	17	18
	AXIAL LENGTH IN.	0.625	0.635	0.646	0.656	0.667	0.677
J	DEG.						
1	0.0	331.	315.	298.	281.	263.	244.
2	5.1	331.	315.	298.	281.	263.	244.
3	10.1	331.	315.	298.	281.	263.	244.
4	15.2	331.	315.	298.	281.	263.	244.
5	20.3	331.	315.	298.	281.	263.	244.
6	25.4	331.	315.	298.	281.	263.	244.
7	30.4	331.	315.	298.	281.	263.	244.
8	35.5	331.	315.	298.	281.	263.	244.
9	40.6	331.	315.	298.	281.	263.	244.
10	45.6	331.	315.	298.	281.	263.	244.
11	50.7	331.	315.	298.	281.	263.	244.
12	55.8	331.	315.	298.	281.	263.	244.
13	60.8	331.	315.	298.	281.	263.	244.
14	65.9	331.	315.	298.	281.	263.	244.
15	71.0	331.	315.	298.	281.	263.	244.
16	76.1	331.	315.	298.	281.	263.	244.
17	81.1	331.	315.	298.	281.	263.	244.
18	86.2	331.	315.	298.	281.	263.	244.
19	91.3	331.	315.	298.	281.	263.	244.
20	96.3	331.	315.	298.	281.	263.	244.
21	101.4	331.	315.	298.	281.	263.	244.
22	106.5	331.	315.	298.	281.	263.	244.
23	111.5	331.	315.	298.	281.	263.	244.
24	116.6	331.	315.	298.	281.	263.	244.
25	121.7	331.	315.	298.	281.	263.	244.
26	126.8	331.	315.	298.	281.	263.	244.
27	131.8	331.	315.	298.	281.	263.	244.
28	136.9	331.	315.	298.	281.	263.	244.
29	142.0	331.	315.	298.	281.	263.	244.
30	147.0	331.	315.	298.	281.	263.	244.
31	152.1	331.	315.	298.	281.	263.	244.
32	157.2	331.	315.	298.	281.	263.	244.
33	162.3	331.	315.	298.	281.	263.	244.
34	167.3	331.	315.	298.	281.	263.	244.
35	172.4	331.	315.	298.	281.	263.	244.
36	177.5	331.	315.	298.	281.	263.	244.
37	182.5	331.	315.	298.	281.	263.	244.
38	187.6	331.	315.	298.	281.	263.	244.
39	192.7	331.	315.	298.	281.	263.	244.
40	197.7	331.	315.	298.	281.	263.	244.
41	202.8	331.	315.	298.	281.	263.	244.
42	207.9	331.	315.	298.	281.	263.	244.
43	213.0	331.	315.	298.	281.	263.	244.
44	218.0	331.	315.	298.	281.	263.	244.
45	223.1	331.	315.	298.	281.	263.	244.
46	228.2	331.	315.	298.	281.	263.	244.
47	233.2	331.	315.	298.	281.	263.	244.
48	238.3	331.	315.	298.	281.	263.	244.
49	243.4	331.	315.	298.	281.	263.	244.
50	248.5	331.	315.	298.	281.	263.	244.
51	253.5	331.	315.	298.	281.	263.	244.
52	258.6	331.	315.	298.	281.	263.	244.
53	263.7	331.	315.	298.	281.	263.	244.
54	268.7	331.	315.	298.	281.	263.	244.
55	273.8	331.	315.	298.	281.	263.	244.
56	278.9	331.	315.	298.	281.	263.	244.
57	283.9	331.	315.	298.	281.	263.	244.
58	289.0	331.	315.	298.	281.	263.	244.
59	294.1	331.	315.	298.	281.	263.	244.

60	299.2	331.	315.	298.	281.	263.	244.
61	304.2	331.	315.	298.	281.	263.	244.
62	309.3	331.	315.	298.	281.	263.	244.
63	314.4	331.	315.	298.	281.	263.	244.
64	319.4	331.	315.	298.	281.	263.	244.
65	324.5	331.	315.	298.	281.	263.	244.
66	329.6	331.	315.	298.	281.	263.	244.
67	334.6	331.	315.	298.	281.	263.	244.
68	339.7	331.	315.	298.	281.	263.	244.
69	344.8	331.	315.	298.	281.	263.	244.
70	349.9	331.	315.	298.	281.	263.	244.
71	354.9	331.	315.	298.	281.	263.	244.
72	360.0	331.	315.	298.	281.	263.	244.

Figure 5-27 (Cont.)

PRESSURE DISTRIBUTION (PSI) FOR PAD NUMBER 1

	I =	19	20	21	22	23	24
	AXIAL LENGTH IN.	0.687	0.698	0.708	0.719	0.729	0.740
J	DEG.						
1	0.0	224.	203.	179.	153.	122.	82.0
2	5.1	224.	203.	179.	153.	122.	82.0
3	10.1	224.	203.	179.	153.	122.	82.0
4	15.2	224.	203.	179.	153.	122.	82.0
5	20.3	224.	203.	179.	153.	122.	82.0
6	25.4	224.	203.	179.	153.	122.	82.0
7	30.4	224.	203.	179.	153.	122.	82.0
8	35.5	224.	203.	179.	153.	122.	82.0
9	40.6	224.	203.	179.	153.	122.	82.0
10	45.6	224.	203.	179.	153.	122.	82.0
11	50.7	224.	203.	179.	153.	122.	82.0
12	55.8	224.	203.	179.	153.	122.	82.0
13	60.8	224.	203.	179.	153.	122.	82.0
14	65.9	224.	203.	179.	153.	122.	82.0
15	71.0	224.	203.	179.	153.	122.	82.0
16	76.1	224.	203.	179.	153.	122.	82.0
17	81.1	224.	203.	179.	153.	122.	82.0
18	86.2	224.	203.	179.	153.	122.	82.0
19	91.3	224.	203.	179.	153.	122.	82.0
20	96.3	224.	203.	179.	153.	122.	82.0
21	101.4	224.	203.	179.	153.	122.	82.0
22	106.5	224.	203.	179.	153.	122.	82.0
23	111.5	224.	203.	179.	153.	122.	82.0
24	116.6	224.	203.	179.	153.	122.	82.0
25	121.7	224.	203.	179.	153.	122.	82.0
26	126.8	224.	203.	179.	153.	122.	82.0
27	131.8	224.	203.	179.	153.	122.	82.0
28	136.9	224.	203.	179.	153.	122.	82.0
29	142.0	224.	203.	179.	153.	122.	82.0
30	147.0	224.	203.	179.	153.	122.	82.0
31	152.1	224.	203.	179.	153.	122.	82.0
32	157.2	224.	203.	179.	153.	122.	82.0
33	162.3	224.	203.	179.	153.	122.	82.0
34	167.3	224.	203.	179.	153.	122.	82.0
35	172.4	224.	203.	179.	153.	122.	82.0
36	177.5	224.	203.	179.	153.	122.	82.0
37	182.5	224.	203.	179.	153.	122.	82.0
38	187.6	224.	203.	179.	153.	122.	82.0
39	192.7	224.	203.	179.	153.	122.	82.0
40	197.7	224.	203.	179.	153.	122.	82.0
41	202.8	224.	203.	179.	153.	122.	82.0
42	207.9	224.	203.	179.	153.	122.	82.0
43	213.0	224.	203.	179.	153.	122.	82.0
44	218.0	224.	203.	179.	153.	122.	82.0
45	223.1	224.	203.	179.	153.	122.	82.0
46	228.2	224.	203.	179.	153.	122.	82.0
47	233.2	224.	203.	179.	153.	122.	82.0
48	238.3	224.	203.	179.	153.	122.	82.0
49	243.4	224.	203.	179.	153.	122.	82.0
50	248.5	224.	203.	179.	153.	122.	82.0
51	253.5	224.	203.	179.	153.	122.	82.0
52	258.6	224.	203.	179.	153.	122.	82.0
53	263.7	224.	203.	179.	153.	122.	82.0
54	268.7	224.	203.	179.	153.	122.	82.0
55	273.8	224.	203.	179.	153.	122.	82.0
56	278.9	224.	203.	179.	153.	122.	82.0
57	283.9	224.	203.	179.	153.	122.	82.0
58	289.0	224.	203.	179.	153.	122.	82.0
59	294.1	224.	203.	179.	153.	122.	82.0

60	299.2	224.	203.	179.	153.	122.	82.0
61	304.2	224.	203.	179.	153.	122.	82.0
62	309.3	224.	203.	179.	153.	122.	82.0
63	314.4	224.	203.	179.	153.	122.	82.0
64	319.4	224.	203.	179.	153.	122.	82.0
65	324.5	224.	203.	179.	153.	122.	82.0
66	329.6	224.	203.	179.	153.	122.	82.0
67	334.6	224.	203.	179.	153.	122.	82.0
68	339.7	224.	203.	179.	153.	122.	82.0
69	344.8	224.	203.	179.	153.	122.	82.0
70	349.9	224.	203.	179.	153.	122.	82.0
71	354.9	224.	203.	179.	153.	122.	82.0
72	360.0	224.	203.	179.	153.	122.	82.0

Figure 5-27 (Cont.)

PRESSURE DISTRIBUTION (PSI) FOR PAD NUMBER 1

I = 25
AXIAL LENGTH IN.
0.750

J	DEG.	
1	0.0	0.000E+00
2	5.1	0.000E+00
3	10.1	0.000E+00
4	15.2	0.000E+00
5	20.3	0.000E+00
6	25.4	0.000E+00
7	30.4	0.000E+00
8	35.5	0.000E+00
9	40.6	0.000E+00
10	45.6	0.000E+00
11	50.7	0.000E+00
12	55.8	0.000E+00
13	60.8	0.000E+00
14	65.9	0.000E+00
15	71.0	0.000E+00
16	76.1	0.000E+00
17	81.1	0.000E+00
18	86.2	0.000E+00
19	91.3	0.000E+00
20	96.3	0.000E+00
21	101.4	0.000E+00
22	106.5	0.000E+00
23	111.5	0.000E+00
24	116.6	0.000E+00
25	121.7	0.000E+00
26	126.8	0.000E+00
27	131.8	0.000E+00
28	136.9	0.000E+00
29	142.0	0.000E+00
30	147.0	0.000E+00
31	152.1	0.000E+00
32	157.2	0.000E+00
33	162.3	0.000E+00
34	167.3	0.000E+00
35	172.4	0.000E+00
36	177.5	0.000E+00
37	182.5	0.000E+00
38	187.6	0.000E+00
39	192.7	0.000E+00
40	197.7	0.000E+00
41	202.8	0.000E+00
42	207.9	0.000E+00
43	213.0	0.000E+00
44	218.0	0.000E+00
45	223.1	0.000E+00
46	228.2	0.000E+00
47	233.2	0.000E+00
48	238.3	0.000E+00
49	243.4	0.000E+00
50	248.5	0.000E+00
51	253.5	0.000E+00
52	258.6	0.000E+00
53	263.7	0.000E+00
54	268.7	0.000E+00
55	273.8	0.000E+00
56	278.9	0.000E+00
57	283.9	0.000E+00
58	289.0	0.000E+00
59	294.1	0.000E+00
60	299.2	0.000E+00

61	304.2	0.000E+00
62	309.3	0.000E+00
63	314.4	0.000E+00
64	319.4	0.000E+00
65	324.5	0.000E+00
66	329.6	0.000E+00
67	334.6	0.000E+00
68	339.7	0.000E+00
69	344.8	0.000E+00
70	349.9	0.000E+00
71	354.9	0.000E+00
72	360.0	0.000E+00

MIN. PRESS= 0.00000E+00 AT 360.00 DEGREES

MAX. PRESS= 400.00 AT 360.00 DEGREES

INSIDE RADIAL TAPERED LAND
GFACE

-JOURNAL POSITION & FORCES

MINIMUM CLEARANCE	=	0.000400	IN
LOAD CAPACITY	=	277.4	LB
MOMENT ABOUT X-X	=	-0.1214E-12	IN-LB
MOMENT ABOUT Y-Y	=	-0.8861E-13	IN-LB
POWER LOSS	=	0.3356E-02	HP
LEAKAGE AT INNER	=	0.1264E-01	LB/S
LEAKAGE AT OUTER	=	0.1246E-01	LB/S

-STIFFNESS COEFFICIENTS

PRINCIPAL Z	KZZ	=	0.5404E+05	LB/IN
CROSS-COUPLED	KZA	=	47.84	LB/RAD
CROSS-COUPLED	KZB	=	47.84	LB/RAD
CROSS-COUPLED	KAZ	=	-0.3066E-07	IN-LB/IN
PRINCIPAL A	KAA	=	0.2056E+05	IN-LB/RAD
CROSS-COUPLED	KAB	=	321.0	IN-LB/RAD
CROSS-COUPLED	KBZ	=	0.2232E-07	IN-LB/IN
CROSS-COUPLED	KBA	=	-321.0	IN-LB/RAD
PRINCIPAL B	KBB	=	0.2056E+05	IN-LB/RAD

-DAMPING COEFFICIENTS

PRINCIPAL Z	DZZ	=	1.088	LB-S/IN
CROSS-COUPLED	DZA	=	-0.1101E-03	LB-S/RAD
CROSS-COUPLED	DZB	=	-0.1101E-03	LB-S/RAD
CROSS-COUPLED	DAZ	=	0.8441E-13	IN-LB-S/IN
PRINCIPAL A	DAA	=	0.2047	IN-LB-S/RAD
CROSS-COUPLED	DAB	=	-0.1491E-02	IN-LB-S/RAD
CROSS-COUPLED	DBZ	=	-0.2549E-16	IN-LB-S/IN
CROSS-COUPLED	DBA	=	0.1491E-02	IN-LB-S/RAD
PRINCIPAL B	DBB	=	0.2047	IN-LB-S/RAD

INSIDE RADIAL TAPERED LAND
GFACE

ECHO OF INPUT

NO MORE INPUT, PROGRAM TERMINATED

Figure 5-27 (Cont.)

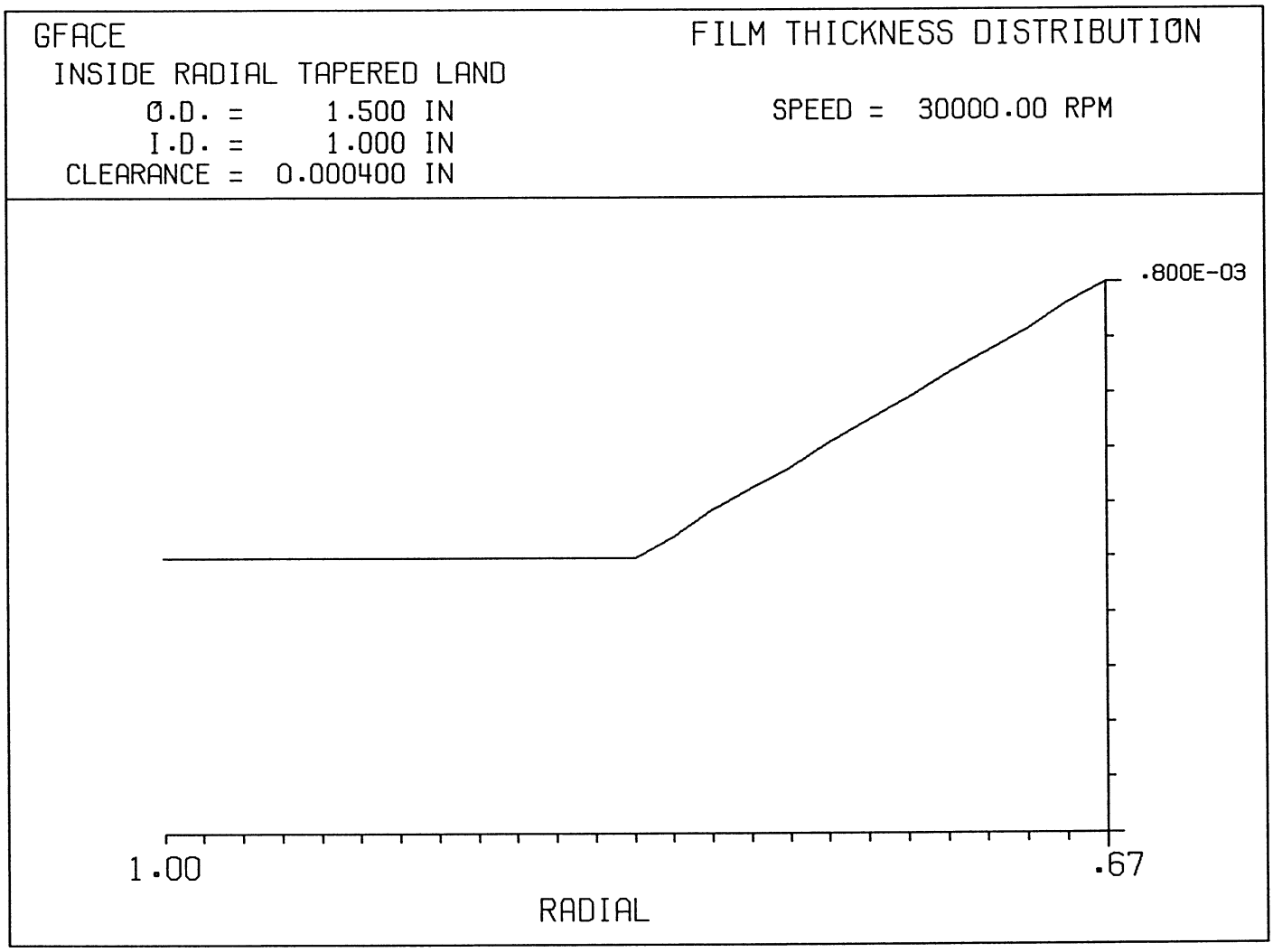

Figure 5-28 Sample Problem 7, Radial Taper Seal - Clearance Distribution

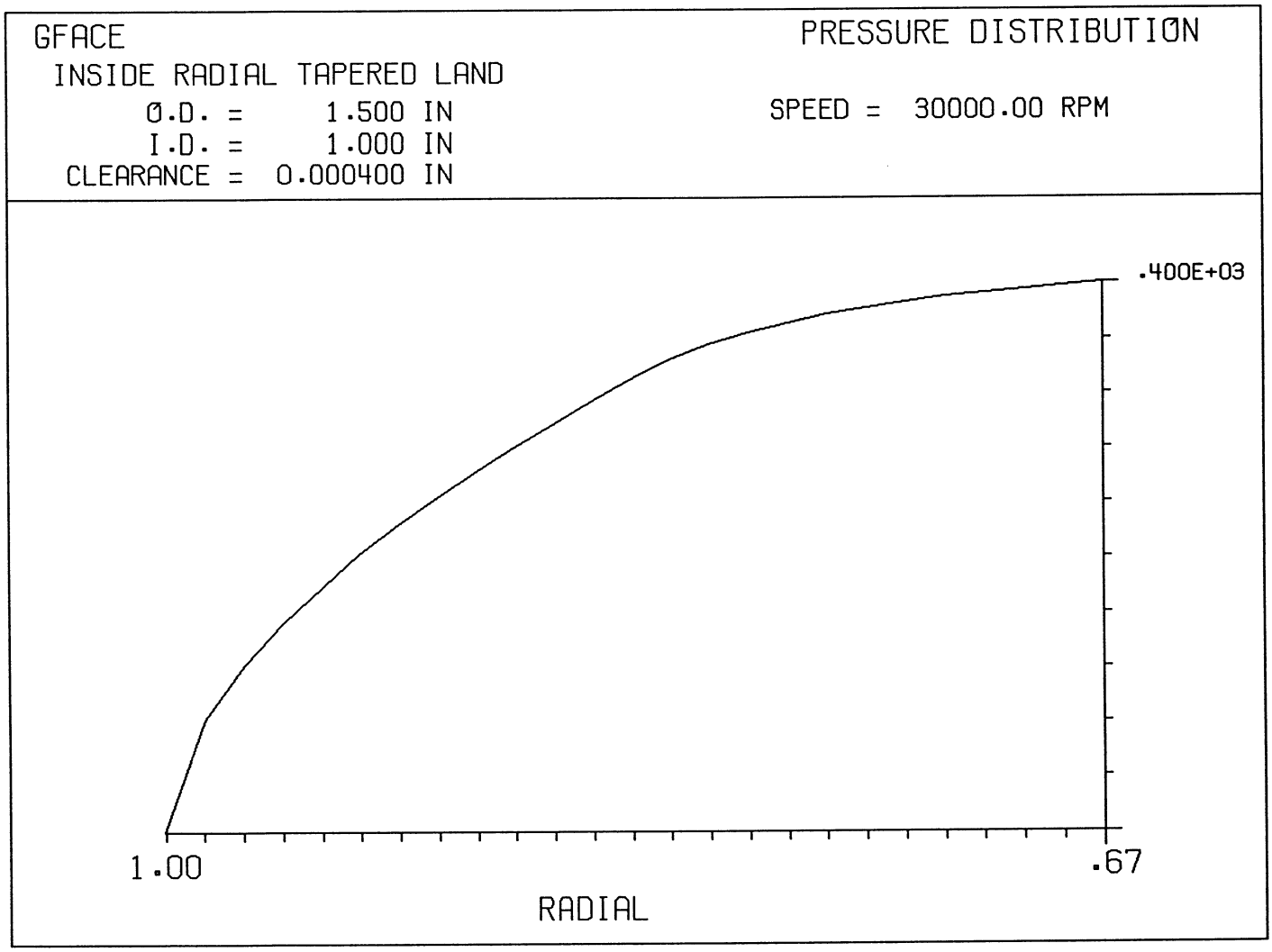

Figure 5-29 Sample Problem 7, Radial Taper Seal - Pressure Distribution

6.0 VERIFICATION

6.1 Tilted Slider

Etsion and Fleming [3]found that maximum load capacity of a slider occurs when it is tilted about the trailing edge and they produced analytical data for varying compressibility numbers, sector angles and radius ratios.. Table 6-1 below shows comparisons for a 45 degree sector.

Table 6-1
Comparisons of GFACE with Etsion and Fleming
Load Capacity

Λ	ε	ζ degrees	N rpm	W' GFACE	W' Etsion & Fleming	Δ%
1	2.5	.0143	133.69	0.00476	0.0047	1.27
10	2.5	.0143	1,336.9	0.0466	0.0460	1.30
25	3.0	.0172	3,342.25	0.1086	0.1080	0.56
50	3.5	.0201	6,684.5	0.1897	0.1850	2.5
100	4.5	.0258	13,369	0.3014	0.2950	2.17

[3]Etsion I., and D. P. Fleming, " An Accurate Solution of the Gas Lubricated, Flat Sector Thrust Bearing", Trans. ASME, *J. Lubr. Technology.*, 99: 82-88

where:

$$\Lambda = \frac{6\mu\omega r_2^2}{h_2^2 P_a}; \quad \varepsilon = \frac{\zeta' r_2}{h_2}; \quad W' = \frac{2W}{P_a \beta \left(r_2^2 - r_1^2\right)}$$

$\mu = absolute\ vis\cos ity, = 1.75\ x\ 10^{-9} \frac{lb-s}{in^2}$

$\omega = shaft\ speed, \quad \frac{rad}{s}$

$N = shaftspeed,\ rpm$

$W = load, \quad lbs.$

$P_a = ambient\ pressure, = 14.7 psia$

$r_2 = outside\ radius, \ = 2.0\ in.$

$r_1 = inside\ radius, \ = \ 0.6\ in.$

$\zeta' = tilt\ angle,\ radians$

$\zeta = tilt\ angle,\ degrees$

$h_2 = trailing edge film\ thickness \ = \ 0.0002\ in.$

The comparative values of non-dimensional load, W' is within 3%. Comparisons were also made for the Power Loss Coefficient (PLC). Results are indicated on Table 6-2.

Table 6-2
Comparison of GFACE with Etsion and Fleming
Power Loss

Λ	ε	PLC GFACE	PLC Etsion
1	2.5	49.4	12
10	2.5	12.86	12
25	3.0	12.987	13
50	3.5	14.193	15
100	4.5	16.15	17

$$PLC = \frac{F}{W\omega h_2} \quad where:$$

$F = Power\ Loss,\ in\text{-}lbs/s$

Figure 6-1 and 6-2 are GFACE input and output for for the 3342 rpm case

```
CHECK3
TILTED SECTOR PAD VS. ETSION AND FLEMING
NPAD       1
OUTER      4.000
INNER      1.2
CLEARANCE  0.0002
START      -45.0
PADANGLE   45.0
GRIDN      37.
GRIDM      15.
VISCOSITY  1.75E-09
ABSTEMP    576.
GASCONST   423184.
ITERATION  15  15
TOLERANCE  .020  .02
SPEED      3342.25
PO         14.7
PLEFT      0.0
PRITE      0.0
PTOP       0.0
PBOT       0.0
MISALIGN   -0.0172
END
```

Figure 6-1 Check Case with Etsion and Fleming, Input File

```
08/04/1993  09:13        Filename: CHECK3.OUT                    Page   1


TILTED SECTOR PAD VS. ETSION AND FLEMING
  GFACE

  ECHO OF INPUT

  NPAD       =    1           NUMBER OF PADS
  OUTER DIA  =    4.0000      OUTER DIAMETER
  INNER DIA  =    1.2000      INNER DIAMETER
  CLEARANCE  =  0.000200      BEARING CLEARANCE
  START      =   -45.00       STARTING ANGLE OF PAD # 1
  PAD ANGLE  =    45.00            PAD ANGLE OF PAD # 1
  GRIDN      =   37           GRID POINTS IN CIRCUMFERENTIAL DIRECTION
  GRIDM      =   15           GRID POINTS IN RADIAL DIRECTION
  VISCOSITY  =  0.1750E-08    ABSOLUTE VISCOSITY
  ABS TEMP   =   576.00       ABSOLUTE TEMPERATURE
  GAS CONST  =  423184.0      GAS CONSTANT
  MXIT1      =  15.           (FOR COMPRESSIBILITY)
  MXIT2      =  15.           (FOR OPTION 2)
  TOL1       =    0.0200      TOLERANCE(COMPRESSIBILITY)
  TOL2       =    0.0200      ITERATION(OPTION 2)
  SPEED      =   3342.25      ROTATIONAL SPEED IN RPM
  PO         =     14.70      REFERENCE(AMBIENT)  PRESSURE
  PLEFT      =      0.00      GAGE PRESSURE AT LEFT BOUNDARY
  PRITE      =      0.00      GAGE PRESSURE AT RIGHT BOUNDARY
  PTOP       =      0.00      GAGE PRESSURE AT TOP BOUNDARY
  PBOT       =      0.00      GAGE PRESSURE AT BOTTOM BOUNDARY
  ALFA       =   -0.0172      X-ANGLE (MISALIGNMENT)
  BETA       =    0.0000      Y-ANGLE (MISALIGNMENT)


TILTED SECTOR PAD VS. ETSION AND FLEMING
  GFACE

  GAS THRUST BEARING/SEAL


  -BEARING GEOMETRY
   NUMBER OF PADS =     1
   OUTER DIAMETER =     4.000 IN
   INNER DIAMETER =     1.200 IN
        CLEARANCE =  0.000200 IN
   STARTING ANGLE =    -45.00 DEG
        PAD ANGLE =     45.00 DEG

  -SPECIAL FILM THICKNESS SPECIFICATION
             ALFA =   -0.0172 DEG  ALIGNMENT ABOUT X-X
             BETA =    0.0000 DEG  ALIGNMENT ABOUT Y-Y

  -LUBRICANT PROPERTIES
                VISCOSITY =  0.1750000E-08 LB-S/IN**2
             GAS CONSTANT =   423184.0     IN**2/S**2-R
        ABS. TEMPERATURE =   576.0000      DEG R

  -BOUNDARY CONDITIONS
      REFERENCE P =   14.70000      PSI
            PLEFT =  0.0000000E+00 PSI
            PRITE =  0.0000000E+00 PSI
             PTOP =  0.0000000E+00 PSI
             PBOT =  0.0000000E+00 PSI
            SPEED =   3342.250     RPM

  -BEARING MODEL
                M =   15
                N =   37
```

```
08/04/1993  09:13        Filename: CHECK3.OUT                    Page   2

          JOINED =    F

   DZ
   0.500E-01 0.500E-01 0.500E-01 0.500E-01 0.500E-01
   0.500E-01 0.500E-01 0.500E-01 0.500E-01 0.500E-01
   0.500E-01 0.500E-01 0.500E-01 0.500E-01 0.500E-01

   DTHETA
   0.218E-01 0.218E-01 0.218E-01 0.218E-01 0.218E-01
   0.218E-01 0.218E-01 0.218E-01 0.218E-01 0.218E-01
   0.218E-01 0.218E-01 0.218E-01 0.218E-01 0.218E-01
   0.218E-01 0.218E-01 0.218E-01 0.218E-01 0.218E-01
   0.218E-01 0.218E-01 0.218E-01 0.218E-01 0.218E-01
   0.218E-01 0.218E-01 0.218E-01 0.218E-01 0.218E-01
   0.218E-01 0.218E-01 0.218E-01 0.218E-01 0.218E-01
   0.218E-01 0.218E-01

TILTED SECTOR PAD VS. ETSION AND FLEMING
  GFACE

  -MAXIMUM NUMBER OF ITERATIONS
     MXIT1 =   15       (FOR COMPRESSIBILITY)
     MXIT2 =   15       (FOR OPTION 2)

  -TOLERANCE
      TOL1 =   0.02000  (FOR COMPRESSIBILITY)
      TOL2 =   0.02000  (FOR OPTION 2)

  -OPTION  =    1       GIVEN CLEARANCE  FIND LOAD CAPACITY
```

Figure 6-2 Check Case with Etsion and Fleming, Output File

08/04/1993 09:13 Filename: CHECK3.OUT Page 3

NON-DIM CLEARANCE DISTRIBUTION(H/C) FOR PAD NUMBER 1

I =		1	2	3	4	5	6
AXIAL LENGTH IN.		0.600	0.700	0.800	0.900	1.000	1.100
J	DEG.						
1	-45.0	1.64	1.74	1.85	1.96	2.06	2.17
2	-43.8	1.62	1.73	1.83	1.93	2.04	2.14
3	-42.5	1.61	1.71	1.81	1.91	2.01	2.12
4	-41.3	1.59	1.69	1.79	1.89	1.99	2.09
5	-40.0	1.58	1.68	1.77	1.87	1.96	2.06
6	-38.8	1.56	1.66	1.75	1.85	1.94	2.03
7	-37.5	1.55	1.64	1.73	1.82	1.91	2.01
8	-36.3	1.53	1.62	1.71	1.80	1.89	1.98
9	-35.0	1.52	1.60	1.69	1.77	1.86	1.95
10	-33.8	1.50	1.58	1.67	1.75	1.83	1.92
11	-32.5	1.48	1.56	1.65	1.73	1.81	1.89
12	-31.3	1.47	1.55	1.62	1.70	1.78	1.86
13	-30.0	1.45	1.53	1.60	1.68	1.75	1.83
14	-28.8	1.43	1.51	1.58	1.65	1.72	1.79
15	-27.5	1.42	1.49	1.55	1.62	1.69	1.76
16	-26.3	1.40	1.46	1.53	1.60	1.66	1.73
17	-25.0	1.38	1.44	1.51	1.57	1.63	1.70
18	-23.8	1.36	1.42	1.48	1.54	1.60	1.66
19	-22.5	1.34	1.40	1.46	1.52	1.57	1.63
20	-21.3	1.33	1.38	1.44	1.49	1.54	1.60
21	-20.0	1.31	1.36	1.41	1.46	1.51	1.56
22	-18.8	1.29	1.34	1.39	1.43	1.48	1.53
23	-17.5	1.27	1.32	1.36	1.41	1.45	1.50
24	-16.3	1.25	1.29	1.34	1.38	1.42	1.46
25	-15.0	1.23	1.27	1.31	1.35	1.39	1.43
26	-13.8	1.21	1.25	1.29	1.32	1.36	1.39
27	-12.5	1.19	1.23	1.26	1.29	1.32	1.36
28	-11.3	1.18	1.20	1.23	1.26	1.29	1.32
29	-10.0	1.16	1.18	1.21	1.23	1.26	1.29
30	-8.8	1.14	1.16	1.18	1.21	1.23	1.25
31	-7.5	1.12	1.14	1.16	1.18	1.20	1.22
32	-6.3	1.10	1.11	1.13	1.15	1.16	1.18
33	-5.0	1.08	1.09	1.10	1.12	1.13	1.14
34	-3.8	1.06	1.07	1.08	1.09	1.10	1.11
35	-2.5	1.04	1.05	1.05	1.06	1.07	1.07
36	-1.3	1.02	1.02	1.03	1.03	1.03	1.04
37	0.0	1.00	1.00	1.00	1.00	1.00	1.00

08/04/1993 09:13 Filename: CHECK3.OUT Page 4

NON-DIM CLEARANCE DISTRIBUTION(H/C) FOR PAD NUMBER 1

I =		7	8	9	10	11	12
AXIAL LENGTH IN.		1.200	1.300	1.400	1.500	1.600	1.700
J	DEG.						
1	-45.0	2.27	2.38	2.49	2.59	2.70	2.80
2	-43.8	2.25	2.35	2.45	2.56	2.66	2.76
3	-42.5	2.22	2.32	2.42	2.52	2.62	2.72
4	-41.3	2.19	2.29	2.39	2.48	2.58	2.68
5	-40.0	2.16	2.25	2.35	2.45	2.54	2.64
6	-38.8	2.13	2.22	2.32	2.41	2.50	2.60
7	-37.5	2.10	2.19	2.28	2.37	2.46	2.55
8	-36.3	2.07	2.15	2.24	2.33	2.42	2.51
9	-35.0	2.03	2.12	2.21	2.29	2.38	2.46
10	-33.8	2.00	2.08	2.17	2.25	2.33	2.42
11	-32.5	1.97	2.05	2.13	2.21	2.29	2.37
12	-31.3	1.93	2.01	2.09	2.17	2.25	2.32
13	-30.0	1.90	1.98	2.05	2.13	2.20	2.28
14	-28.8	1.87	1.94	2.01	2.08	2.16	2.23
15	-27.5	1.83	1.90	1.97	2.04	2.11	2.18
16	-26.3	1.80	1.86	1.93	2.00	2.06	2.13
17	-25.0	1.76	1.82	1.89	1.95	2.01	2.08
18	-23.8	1.73	1.79	1.85	1.91	1.97	2.03
19	-22.5	1.69	1.75	1.80	1.86	1.92	1.98
20	-21.3	1.65	1.71	1.76	1.82	1.87	1.92
21	-20.0	1.62	1.67	1.72	1.77	1.82	1.87
22	-18.8	1.58	1.63	1.68	1.72	1.77	1.82
23	-17.5	1.54	1.59	1.63	1.68	1.72	1.77
24	-16.3	1.50	1.55	1.59	1.63	1.67	1.71
25	-15.0	1.47	1.51	1.54	1.58	1.62	1.66
26	-13.8	1.43	1.46	1.50	1.54	1.57	1.61
27	-12.5	1.39	1.42	1.45	1.49	1.52	1.55
28	-11.3	1.35	1.38	1.41	1.44	1.47	1.50
29	-10.0	1.31	1.34	1.36	1.39	1.42	1.44
30	-8.8	1.27	1.30	1.32	1.34	1.37	1.39
31	-7.5	1.24	1.25	1.27	1.29	1.31	1.33
32	-6.3	1.20	1.21	1.23	1.25	1.26	1.28
33	-5.0	1.16	1.17	1.18	1.20	1.21	1.22
34	-3.8	1.12	1.13	1.14	1.15	1.16	1.17
35	-2.5	1.08	1.09	1.09	1.10	1.10	1.11
36	-1.3	1.04	1.04	1.05	1.05	1.05	1.06
37	0.0	1.00	1.00	1.00	1.00	1.00	1.00

Figure 6-2 (Cont.)

08/04/1993 09:13 Filename: CHECK3.OUT Page 5

NON-DIM CLEARANCE DISTRIBUTION(H/C) FOR PAD NUMBER 1

I =		13	14	15
AXIAL LENGTH IN.		1.800	1.900	2.000
J	DEG.			
1	-45.0	2.91	3.02	3.12
2	-43.8	2.87	2.97	3.08
3	-42.5	2.83	2.93	3.03
4	-41.3	2.78	2.88	2.98
5	-40.0	2.74	2.83	2.93
6	-38.8	2.69	2.79	2.88
7	-37.5	2.64	2.74	2.83
8	-36.3	2.60	2.69	2.78
9	-35.0	2.55	2.64	2.72
10	-33.8	2.50	2.58	2.67
11	-32.5	2.45	2.53	2.61
12	-31.3	2.40	2.48	2.56
13	-30.0	2.35	2.43	2.50
14	-28.8	2.30	2.37	2.44
15	-27.5	2.25	2.32	2.39
16	-26.3	2.19	2.26	2.33
17	-25.0	2.14	2.21	2.27
18	-23.8	2.09	2.15	2.21
19	-22.5	2.03	2.09	2.15
20	-21.3	1.98	2.03	2.09
21	-20.0	1.92	1.98	2.03
22	-18.8	1.87	1.92	1.96
23	-17.5	1.81	1.86	1.90
24	-16.3	1.76	1.80	1.84
25	-15.0	1.70	1.74	1.78
26	-13.8	1.64	1.68	1.71
27	-12.5	1.58	1.62	1.65
28	-11.3	1.53	1.56	1.59
29	-10.0	1.47	1.50	1.52
30	-8.8	1.41	1.43	1.46
31	-7.5	1.35	1.37	1.39
32	-6.3	1.29	1.31	1.33
33	-5.0	1.24	1.25	1.26
34	-3.8	1.18	1.19	1.20
35	-2.5	1.12	1.12	1.13
36	-1.3	1.06	1.06	1.07
37	0.0	1.00	1.00	1.00

MIN. CLEAR.= 1.0000 AT 0.00000E+00 DEGREES

MAX. CLEAR.= 3.1227 AT -45.000 DEGREES

08/04/1993 09:13 Filename: CHECK3.OUT Page 6

PRESSURE DISTRIBUTION (PSI) FOR PAD NUMBER 1

I =		1	2	3	4	5	6
AXIAL LENGTH IN.		0.600	0.700	0.800	0.900	1.000	1.100
J	DEG.						
1	-45.0	0.000E+00	0.000E+00	0.000E+00	0.000E+00	0.000E+00	0.000E+00
2	-43.8	0.000E+00	0.515E-01	0.795E-01	0.976E-01	0.110	0.118
3	-42.5	0.000E+00	0.103	0.159	0.196	0.221	0.237
4	-41.3	0.000E+00	0.153	0.239	0.295	0.333	0.357
5	-40.0	0.000E+00	0.204	0.320	0.395	0.446	0.479
6	-38.8	0.000E+00	0.254	0.400	0.496	0.561	0.603
7	-37.5	0.000E+00	0.304	0.481	0.597	0.676	0.727
8	-36.3	0.000E+00	0.354	0.562	0.699	0.793	0.854
9	-35.0	0.000E+00	0.403	0.643	0.802	0.911	0.982
10	-33.8	0.000E+00	0.453	0.724	0.905	1.03	1.11
11	-32.5	0.000E+00	0.502	0.805	1.01	1.15	1.24
12	-31.3	0.000E+00	0.551	0.885	1.11	1.27	1.38
13	-30.0	0.000E+00	0.599	0.966	1.22	1.39	1.51
14	-28.8	0.000E+00	0.647	1.05	1.32	1.51	1.64
15	-27.5	0.000E+00	0.693	1.12	1.42	1.64	1.78
16	-26.3	0.000E+00	0.739	1.20	1.52	1.76	1.92
17	-25.0	0.000E+00	0.784	1.28	1.63	1.88	2.06
18	-23.8	0.000E+00	0.827	1.35	1.72	2.00	2.19
19	-22.5	0.000E+00	0.868	1.42	1.82	2.12	2.33
20	-21.3	0.000E+00	0.907	1.49	1.91	2.23	2.47
21	-20.0	0.000E+00	0.943	1.55	2.00	2.34	2.60
22	-18.8	0.000E+00	0.975	1.61	2.08	2.45	2.73
23	-17.5	0.000E+00	1.00	1.66	2.16	2.55	2.85
24	-16.3	0.000E+00	1.03	1.71	2.23	2.64	2.96
25	-15.0	0.000E+00	1.04	1.74	2.28	2.72	3.07
26	-13.8	0.000E+00	1.05	1.77	2.33	2.79	3.16
27	-12.5	0.000E+00	1.06	1.78	2.35	2.83	3.23
28	-11.3	0.000E+00	1.05	1.77	2.36	2.86	3.28
29	-10.0	0.000E+00	1.03	1.74	2.34	2.85	3.30
30	-8.8	0.000E+00	0.991	1.69	2.29	2.81	3.28
31	-7.5	0.000E+00	0.938	1.61	2.20	2.72	3.20
32	-6.3	0.000E+00	0.865	1.50	2.06	2.58	3.06
33	-5.0	0.000E+00	0.767	1.34	1.86	2.35	2.83
34	-3.8	0.000E+00	0.639	1.12	1.58	2.03	2.47
35	-2.5	0.000E+00	0.474	0.843	1.20	1.57	1.94
36	-1.3	0.000E+00	0.265	0.476	0.691	0.918	1.16
37	0.0	0.000E+00	0.000E+00	0.000E+00	0.000E+00	0.000E+00	0.000E+00

Figure 6-2 (Cont.)

PRESSURE DISTRIBUTION (PSI) FOR PAD NUMBER 1

J	DEG.	I = 7	8	9	10	11	12
	AXIAL LENGTH IN.	1.200	1.300	1.400	1.500	1.600	1.700
1	-45.0	0.000E+00	0.000E+00	0.000E+00	0.000E+00	0.000E+00	0.000E+00
2	-43.8	0.122	0.123	0.120	0.115	0.105	0.911E-01
3	-42.5	0.245	0.247	0.242	0.229	0.209	0.180
4	-41.3	0.370	0.372	0.364	0.345	0.313	0.268
5	-40.0	0.497	0.499	0.487	0.461	0.417	0.356
6	-38.8	0.625	0.628	0.612	0.578	0.522	0.443
7	-37.5	0.754	0.758	0.739	0.697	0.628	0.530
8	-36.3	0.886	0.891	0.868	0.817	0.735	0.619
9	-35.0	1.02	1.03	0.999	0.940	0.844	0.709
10	-33.8	1.16	1.16	1.13	1.07	0.956	0.802
11	-32.5	1.29	1.30	1.27	1.19	1.07	0.897
12	-31.3	1.43	1.44	1.41	1.33	1.19	0.995
13	-30.0	1.57	1.59	1.55	1.46	1.31	1.10
14	-28.8	1.72	1.74	1.70	1.60	1.44	1.20
15	-27.5	1.87	1.89	1.85	1.74	1.57	1.31
16	-26.3	2.01	2.04	2.00	1.89	1.70	1.43
17	-25.0	2.16	2.20	2.16	2.04	1.84	1.55
18	-23.8	2.31	2.36	2.32	2.20	1.99	1.68
19	-22.5	2.46	2.52	2.49	2.37	2.14	1.81
20	-21.3	2.62	2.68	2.66	2.53	2.30	1.95
21	-20.0	2.77	2.85	2.83	2.70	2.47	2.09
22	-18.8	2.91	3.01	3.00	2.88	2.64	2.25
23	-17.5	3.06	3.17	3.18	3.06	2.81	2.41
24	-16.3	3.20	3.33	3.35	3.24	2.99	2.58
25	-15.0	3.32	3.48	3.52	3.42	3.18	2.75
26	-13.8	3.44	3.62	3.68	3.60	3.36	2.93
27	-12.5	3.54	3.75	3.83	3.77	3.54	3.11
28	-11.3	3.62	3.85	3.97	3.93	3.72	3.29
29	-10.0	3.66	3.93	4.07	4.07	3.88	3.46
30	-8.8	3.67	3.97	4.14	4.17	4.02	3.62
31	-7.5	3.62	3.94	4.16	4.23	4.11	3.74
32	-6.3	3.49	3.84	4.09	4.20	4.13	3.81
33	-5.0	3.26	3.63	3.91	4.06	4.04	3.78
34	-3.8	2.88	3.25	3.55	3.74	3.78	3.59
35	-2.5	2.30	2.64	2.93	3.14	3.22	3.12
36	-1.3	1.40	1.64	1.86	2.04	2.14	2.12
37	0.0	0.000E+00	0.000E+00	0.000E+00	0.000E+00	0.000E+00	0.000E+00

PRESSURE DISTRIBUTION (PSI) FOR PAD NUMBER 1

J	DEG.	I = 13	14	15
	AXIAL LENGTH IN.	1.800	1.900	2.000
1	-45.0	0.000E+00	0.000E+00	0.000E+00
2	-43.8	0.717E-01	0.442E-01	0.000E+00
3	-42.5	0.140	0.839E-01	0.000E+00
4	-41.3	0.206	0.121	0.000E+00
5	-40.0	0.271	0.156	0.000E+00
6	-38.8	0.335	0.191	0.000E+00
7	-37.5	0.399	0.225	0.000E+00
8	-36.3	0.463	0.260	0.000E+00
9	-35.0	0.529	0.295	0.000E+00
10	-33.8	0.596	0.332	0.000E+00
11	-32.5	0.665	0.370	0.000E+00
12	-31.3	0.737	0.409	0.000E+00
13	-30.0	0.812	0.450	0.000E+00
14	-28.8	0.891	0.494	0.000E+00
15	-27.5	0.974	0.540	0.000E+00
16	-26.3	1.06	0.589	0.000E+00
17	-25.0	1.15	0.641	0.000E+00
18	-23.8	1.25	0.697	0.000E+00
19	-22.5	1.35	0.757	0.000E+00
20	-21.3	1.46	0.821	0.000E+00
21	-20.0	1.58	0.890	0.000E+00
22	-18.8	1.70	0.964	0.000E+00
23	-17.5	1.83	1.04	0.000E+00
24	-16.3	1.97	1.13	0.000E+00
25	-15.0	2.11	1.22	0.000E+00
26	-13.8	2.27	1.32	0.000E+00
27	-12.5	2.42	1.42	0.000E+00
28	-11.3	2.59	1.53	0.000E+00
29	-10.0	2.75	1.65	0.000E+00
30	-8.8	2.90	1.76	0.000E+00
31	-7.5	3.04	1.87	0.000E+00
32	-6.3	3.14	1.97	0.000E+00
33	-5.0	3.17	2.02	0.000E+00
34	-3.8	3.07	2.01	0.000E+00
35	-2.5	2.72	1.84	0.000E+00
36	-1.3	1.90	1.33	0.000E+00
37	0.0	0.000E+00	0.000E+00	0.000E+00

MIN. PRESS= 0.00000E+00 AT 0.00000E+00 DEGREES

MAX. PRESS= 4.2278 AT -7.5000 DEGREES

TILTED SECTOR PAD VS. ETSION AND FLEMING
GFACE

-JOURNAL POSITION & FORCES

MINIMUM CLEARANCE	=	0.000200	IN
LOAD CAPACITY	=	2.281	LB
MOMENT ABOUT X-X	=	-0.8609	IN-LB
MOMENT ABOUT Y-Y	=	-3.049	IN-LB
POWER LOSS	=	0.3142E-03	HP
LEAKAGE AT INNER	=	-0.8702E-07	LB/S
LEAKAGE AT OUTER	=	0.9055E-06	LB/S

Figure 6-2 (Cont.)

```
TILTED SECTOR PAD VS. ETSION AND FLEMING
  GFACE

  ECHO OF INPUT


 NO MORE INPUT, PROGRAM TERMINATED
```

Figure 6-2 (Cont.)

The correlation is excellent except for Λ =1. The friction levels are on a precipitous upward curve at his value of Λ and is very easy to be off by a substantial amount. The curve fitting of the Etsion data could easily produce significant error. It is the authors inclination that the GFACE values are accurate.

6.2 Ausman Rayleigh-step Analysis

In 1961 Ausman produced theoretical results for a Rayleigh step sector[4]for varying radius ratios, number of pads and compressibility parameter Λ. Comparative results with GFACE are indicated on Table 6-3.

Table 6-3
GFACE Comparison with Ausman
Rayleigh-step Pad

Λ	n	W	W' GFACE	W' Ausman	Δ %
10	8	0.7539	0.0456	0.046	-.87
20	7	1.821	0.0957	0.103	-7
40	7	3.701	0.1946	0.219	-11
80	6	7.766	0.3479	0.397	-12
160	6	11.71	0.5246	0.572	-8

$$\Lambda = \frac{6\mu\omega r_2^2}{P_a h_2^2}; \quad n = number\ of pads, \quad \frac{r_1}{r_2} = 0.5$$

Variables remain as defined above. The correlation as indicated is fair, but not as good as expected. The Ausman analysis was done in 1961, when contemporary numerical analysis was unavailable. Therefore, it is believed that the GFACE data is more accurate.

Further cases were compared with information in Gross[5] for a step pad configuration with the following geometry and operating conditions:

Shaft speed, N	36,000 rpm
Ambient pressure, P_a	42.6psia
Viscosity, μ	5×10^{-9} lb-s/in^2
Radius ratio, R	0.6
Outside radius, r_2	1.75 in.
Inside radius, r_1	1.05 in.
Pad Angle, β	38°

[4]Ausman, J. S. "An Approximate Analytical Solution for Self-Acting Gas Lubrication of Stepped Sector Thrust Bearings", *ASLE Transactions* 4: 304-314
[5]Gross, W. A. ,et. al "Fluid-Film Lubrication", *John Wiley & Sons*, copyright 1980

Step Angle, β_1	15°
Land film thickness, h_2	0.0005 in.

Comparative results are shown on Figures 6-3 and 6-4. The comparisons are reasonable and descrepancies are probably due to the inaccuracies of the numerical methods utilized by Gross that appears to overestimate load capacity and underestimate power loss. Thus, the application of GFACE would provide conservative designs as compared to Gross.

6.3 Internal Verification

There are a number of internal checks that can be made to assure numerical correctness and accuracy. The first case is a recess hydrostatic bearing without rotation. Then the mass flow entering the recess from an external source should equal the mass flow exiting the pad. A 35 degree pad was examined with variable grid geometry and a recess specified. The input is shown on Figure 6-5. Four flow paths were specified at the perimiters of the pad. Fig. 6-6 shows the output for this case. The following calculations were made:

Flow exiting from pad:

- Flow path 1 = -0.1968×10^{-4} lbs/s
- Flow path 1 = 0.3519×10^{-4} lbs/s
- Flow path 1 = -0.6005×10^{-4} lbs/s
- Flow path 1 = 0.8530×10^{-4} lbs/s

- Total =. 2.0022×10^{-4} lbs/s

The negative number implies that the flow is ina a direction opposite to that of the positive sign convention. In this case all flows are exiting the pad and the total outflow is the absolute sum.

The inflow is the total flow going through the orifice feeding the recess. The following equation applies:

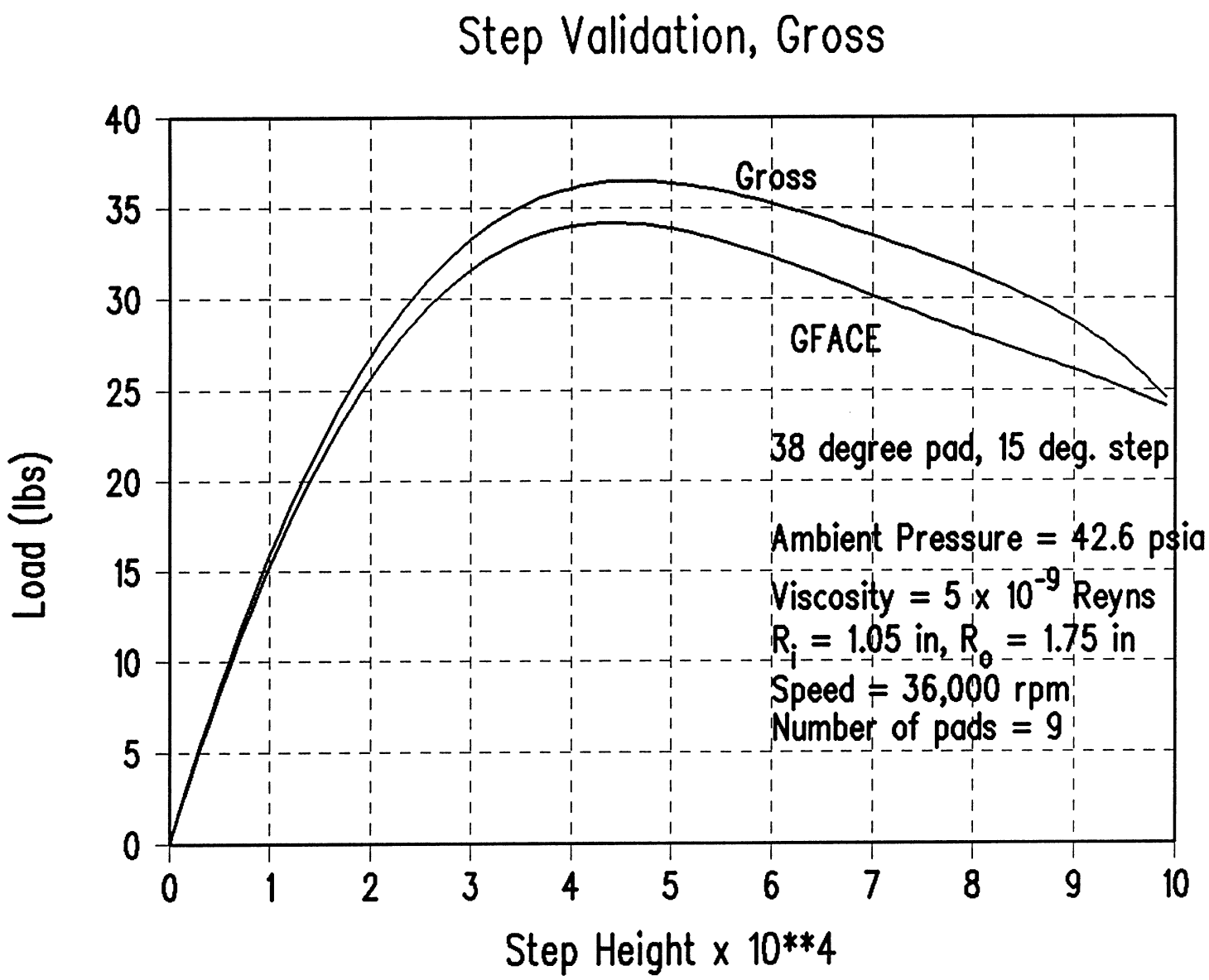

Figure 6-3 Validation, Step Pad, Load vs. Step Height

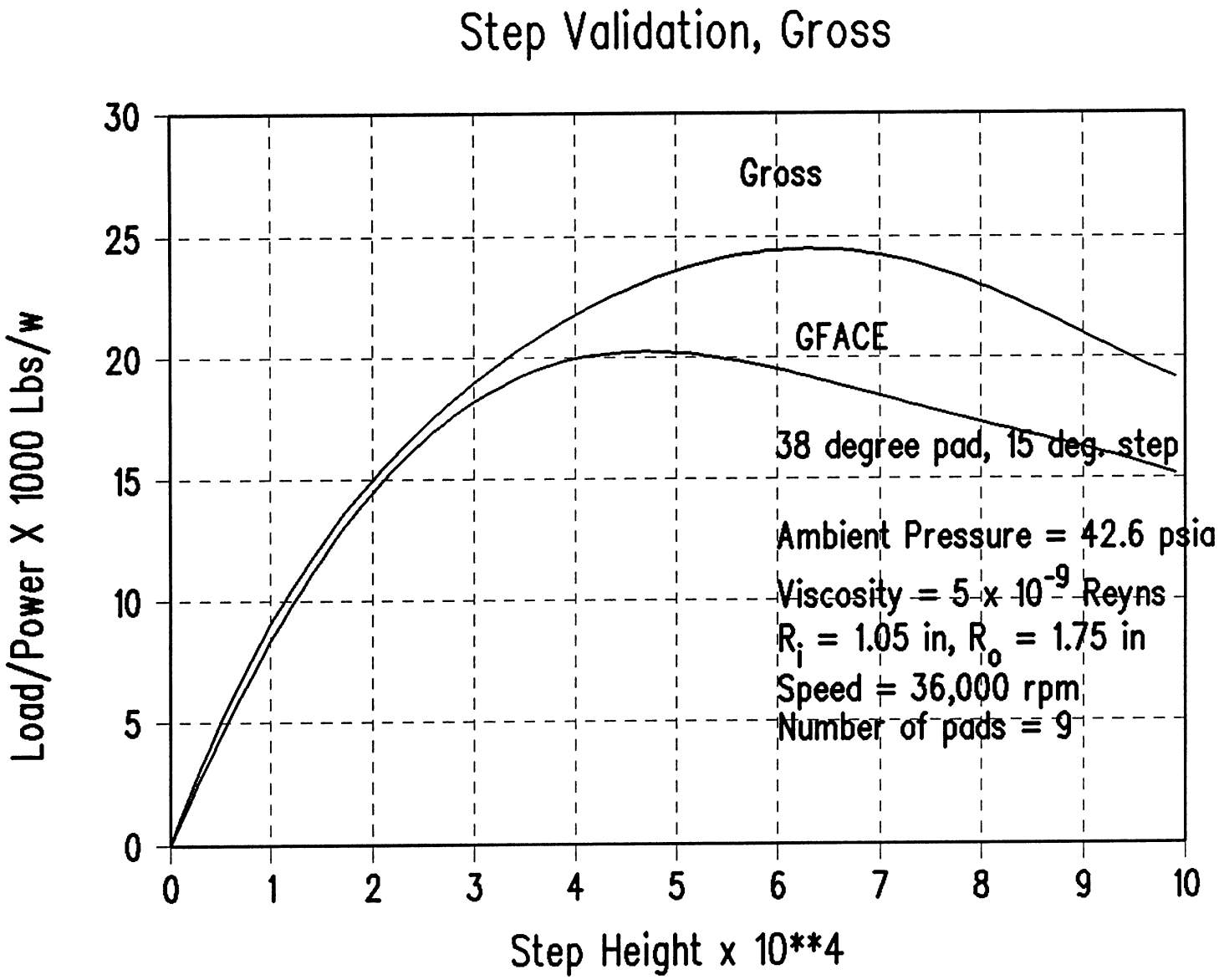

Figure 6-4 Validation, Step-Pad, Load/Power vs. Step Height

05/24/1993 10:18 Filename: REC1.INP Page 1

```
REC1
RECESS SEAL
*
NPAD          1
OPTION        1.
*
STIFFNESS     .0001
DIAGNOS       1.
VGRIDM        16
    1.25  1.30  1.35  1.40 1.41 1.42 1.43 1.45 1.55 1.70
    1.84  1.85  1.86 1.90  1.95  2.00
VGRIDN        21.
     5.  10.  15.  20. 21. 22. 23. 24.  26.  28.  30.  30.1 30.5  31.
    32.  34.  36.  37.  38.  39.  40.
*
CLEARANCE    0.0005
RECESS        1
             .0200 5 4 11 11
SPOTRE       1
   7 7
DO           .010
PS           200.
SPHEAT       1.4
GASCONST     2.469E5
ABSTEMP      1460.
VISCOSITY    0.535E-8
TOLERA        0.001
SPEED        0.0
PO            14.7
PLEFT          0.
PRITE          0.
PTOP           0.
PBOT           0.
FLOW           4
               1 1  16 1
               1 21 16 21
               1 1 1 21
               16 1 16 21
END
```

Figure 6-5 Flow Validation, Recess Seal, Input File

```
05/24/1993  11:49        Filename: REC1.OUT                          Page   1

GFACE -V1.0-   RECESS SEAL


ECHO OF INPUT

*
NPAD      =    1          NUMBER OF PADS
OPTION    =    1          GIVEN CLEARANCE FIND LOAD CAPACITY
*
ISTIF     =    1          STIFFNESS CALCULATION
EXCITATION SPEED, RPM  =       0.0001
DIAGNOSTIC=   1.          DIAGNOSTIC OUTPUT
GRIDM     =   16          GRID POINTS IN RADIAL DIRECTION
VARIABLE GRID IN AXIAL DIRECTION
   1.250       1.300       1.350       1.400       1.410
   1.420       1.430       1.450       1.550       1.700
   1.840       1.850       1.860       1.900       1.950
   2.000
GRIDN     =   21          GRID POINTS IN CIRCUMFERENTIAL DIRECTION
VARIABLE GRID IN CIRCUMFERENTIAL DIRECTION
   5.000       10.00       15.00       20.00       21.00
   22.00       23.00       24.00       26.00       28.00
   30.00       30.10       30.50       31.00       32.00
   34.00       36.00       37.00       38.00       39.00
   40.00
*
CLEARANCE =  0.000500     BEARING CLEARANCE
RECESS
RECESS HEIGHT =      0.02000          IL =     5     JL =     4     IR =    11
  JR =   11
SPOT RECESSES
    7    7
DO        =    0.0100     ORIFICE DIAMETER
PS        =    200.00     SUPPLY PRESSURE(ORIFICE)
SPECIFIC  =    1.4000     SPECIFIC HEAT RATIO
GAS CONST =  246900.0     GAS CONSTANT
ABS TEMP  =   1460.00     ABSOLUTE TEMPERATURE
VISCOSITY =  0.5350E-08   ABSOLUTE VISCOSITY
TOL1      =    0.0010     TOLERANCE(COMPRESSIBILITY)
TOL2      =    0.0000     ITERATION(OPTION 2)
SPEED     =      0.00     ROTATIONAL SPEED IN RPM
PO        =     14.70     REFERENCE(AMBIENT)  PRESSURE
PLEFT     =      0.00     GAGE PRESSURE AT LEFT BOUNDARY
PRITE     =      0.00     GAGE PRESSURE AT RIGHT BOUNDARY
PTOP      =      0.00     GAGE PRESSURE AT TOP BOUNDARY
PBOT      =      0.00     GAGE PRESSURE AT BOTTOM BOUNDARY
FLOW RATE CALCULATION
FLOW BETWEEN NODES   1.   1. AND  16.   1.
FLOW BETWEEN NODES   1.  21. AND  16.  21.
FLOW BETWEEN NODES   1.   1. AND   1.  21.
FLOW BETWEEN NODES  16.   1. AND  16.  21.

GFACE -V1.0-   RECESS SEAL


GAS THRUST BEARING/SEAL


-BEARING GEOMETRY
```

```
05/24/1993  11:49        Filename: REC1.OUT                          Page   2

NUMBER OF PADS =     1
OUTER DIAMETER =     4.000 IN
INNER DIAMETER =     2.500 IN
     CLEARANCE =  0.000500 IN
STARTING ANGLE =     5.00 DEG
     PAD ANGLE =    35.00 DEG

-LUBRICANT PROPERTIES
             VISCOSITY =  0.5350000E-08 LB-S/IN**2
          GAS CONSTANT =   246900.0     IN**2/S**2-R
      ABS. TEMPERATURE =   1460.000     DEG R

-ORIFICE RELATED PROPERTIES
 ORIFICE
              DIAMETER =  0.1000000E-01 IN
       DISCHARGE COEF =  0.9000000
      SUPPLY PRESSURE =   200.0000     PSI

   SPECIFIC HEAT RATIO =   1.400000

***RECESS TYPE

-BOUNDARY CONDITIONS
    REFERENCE P =   14.70000     PSI
          PLEFT =  0.0000000E+00 PSI
          PRITE =  0.0000000E+00 PSI
           PTOP =  0.0000000E+00 PSI
           PBOT =  0.0000000E+00 PSI
          SPEED =  0.0000000E+00 RPM

-BEARING MODEL
              M =   16
              N =   21
         JOINED =    F

 DZ
 0.250E-01 0.250E-01 0.250E-01 0.500E-02 0.500E-02
 0.500E-02 0.100E-01 0.500E-01 0.750E-01 0.700E-01
 0.500E-02 0.500E-02 0.200E-01 0.250E-01 0.250E-01
 0.250E-01

 DTHETA
 0.873E-01 0.873E-01 0.873E-01 0.175E-01 0.175E-01
 0.175E-01 0.175E-01 0.349E-01 0.349E-01 0.349E-01
 0.175E-02 0.698E-02 0.873E-02 0.175E-01 0.349E-01
 0.349E-01 0.175E-01 0.175E-01 0.175E-01 0.175E-01
 0.175E-01

GFACE -V1.0-   RECESS SEAL


-MAXIMUM NUMBER OF ITERATIONS
   MXIT1 =   10       (FOR COMPRESSIBILITY)
   MXIT2 =    5       (FOR OPTION 2)

-TOLERANCE
    TOL1 =   0.00100  (FOR COMPRESSIBILITY)
    TOL2 =   0.01000  (FOR OPTION 2)

-OPTION  =    1       GIVEN CLEARANCE  FIND LOAD CAPACITY


SPECIFIED SOURCE
```

Figure 6-6 Flow Validation, Recess Seal, Output File

1	F	F	F	F	F	F	F	F	F	F	F	F	F	F	F	F
2	F	F	F	F	F	F	F	F	F	F	F	F	F	F	F	F
3	F	F	F	F	F	F	F	F	F	F	F	F	F	F	F	F
4	F	F	F	F	F	F	F	F	F	F	F	F	F	F	F	F
5	F	F	F	F	F	F	F	F	F	F	F	F	F	F	F	F
6	F	F	F	F	F	F	F	F	F	F	F	F	F	F	F	F
7	F	F	F	F	F	F	T	F	F	F	F	F	F	F	F	F
8	F	F	F	F	F	F	F	F	F	F	F	F	F	F	F	F
9	F	F	F	F	F	F	F	F	F	F	F	F	F	F	F	F
10	F	F	F	F	F	F	F	F	F	F	F	F	F	F	F	F
11	F	F	F	F	F	F	F	F	F	F	F	F	F	F	F	F
12	F	F	F	F	F	F	F	F	F	F	F	F	F	F	F	F
13	F	F	F	F	F	F	F	F	F	F	F	F	F	F	F	F
14	F	F	F	F	F	F	F	F	F	F	F	F	F	F	F	F
15	F	F	F	F	F	F	F	F	F	F	F	F	F	F	F	F
16	F	F	F	F	F	F	F	F	F	F	F	F	F	F	F	F
17	F	F	F	F	F	F	F	F	F	F	F	F	F	F	F	F
18	F	F	F	F	F	F	F	F	F	F	F	F	F	F	F	F
19	F	F	F	F	F	F	F	F	F	F	F	F	F	F	F	F
20	F	F	F	F	F	F	F	F	F	F	F	F	F	F	F	F
21	F	F	F	F	F	F	F	F	F	F	F	F	F	F	F	F

FLOW THRU SPECIFIED GRID LINE
FROM 1 1 TO 16 1 FLOW= -0.1968E-04 LB/S

FLOW THRU SPECIFIED GRID LINE
FROM 1 21 TO 16 21 FLOW= 0.3519E-04 LB/S

FLOW THRU SPECIFIED GRID LINE
FROM 1 1 TO 1 21 FLOW= -0.6005E-04 LB/S

FLOW THRU SPECIFIED GRID LINE
FROM 16 1 TO 16 21 FLOW= 0.8530E-04 LB/S

NON-DIM CLEARANCE DISTRIBUTION(H/C) FOR PAD NUMBER 1

I =		1	2	3	4	5	6
AXIAL LENGTH IN.		1.250	1.300	1.350	1.400	1.410	1.420
J	DEG.						
1	5.0	1.00	1.00	1.00	1.00	1.00	1.00
2	10.0	1.00	1.00	1.00	1.00	1.00	1.00
3	15.0	1.00	1.00	1.00	1.00	1.00	1.00
4	20.0	1.00	1.00	1.00	1.00	41.0	41.0
5	21.0	1.00	1.00	1.00	1.00	41.0	41.0
6	22.0	1.00	1.00	1.00	1.00	41.0	41.0
7	23.0	1.00	1.00	1.00	1.00	41.0	41.0
8	24.0	1.00	1.00	1.00	1.00	41.0	41.0
9	26.0	1.00	1.00	1.00	1.00	41.0	41.0
10	28.0	1.00	1.00	1.00	1.00	41.0	41.0
11	30.0	1.00	1.00	1.00	1.00	41.0	41.0
12	30.1	1.00	1.00	1.00	1.00	1.00	1.00
13	30.5	1.00	1.00	1.00	1.00	1.00	1.00
14	31.0	1.00	1.00	1.00	1.00	1.00	1.00
15	32.0	1.00	1.00	1.00	1.00	1.00	1.00
16	34.0	1.00	1.00	1.00	1.00	1.00	1.00
17	36.0	1.00	1.00	1.00	1.00	1.00	1.00
18	37.0	1.00	1.00	1.00	1.00	1.00	1.00
19	38.0	1.00	1.00	1.00	1.00	1.00	1.00
20	39.0	1.00	1.00	1.00	1.00	1.00	1.00
21	40.0	1.00	1.00	1.00	1.00	1.00	1.00

Figure 6-6 (Cont.)

05/24/1993 11:49 Filename: REC1.OUT Page 5

NON-DIM CLEARANCE DISTRIBUTION(H/C) FOR PAD NUMBER 1

I =		7	8	9	10	11	12
AXIAL LENGTH IN.		1.430	1.450	1.550	1.700	1.840	1.850
J	DEG.						
1	5.0	1.00	1.00	1.00	1.00	1.00	1.00
2	10.0	1.00	1.00	1.00	1.00	1.00	1.00
3	15.0	1.00	1.00	1.00	1.00	1.00	1.00
4	20.0	41.0	41.0	41.0	41.0	41.0	1.00
5	21.0	41.0	41.0	41.0	41.0	41.0	1.00
6	22.0	41.0	41.0	41.0	41.0	41.0	1.00
7	23.0	41.0	41.0	41.0	41.0	41.0	1.00
8	24.0	41.0	41.0	41.0	41.0	41.0	1.00
9	26.0	41.0	41.0	41.0	41.0	41.0	1.00
10	28.0	41.0	41.0	41.0	41.0	41.0	1.00
11	30.0	41.0	41.0	41.0	41.0	41.0	1.00
12	30.1	1.00	1.00	1.00	1.00	1.00	1.00
13	30.5	1.00	1.00	1.00	1.00	1.00	1.00
14	31.0	1.00	1.00	1.00	1.00	1.00	1.00
15	32.0	1.00	1.00	1.00	1.00	1.00	1.00
16	34.0	1.00	1.00	1.00	1.00	1.00	1.00
17	36.0	1.00	1.00	1.00	1.00	1.00	1.00
18	37.0	1.00	1.00	1.00	1.00	1.00	1.00
19	38.0	1.00	1.00	1.00	1.00	1.00	1.00
20	39.0	1.00	1.00	1.00	1.00	1.00	1.00
21	40.0	1.00	1.00	1.00	1.00	1.00	1.00

05/24/1993 11:49 Filename: REC1.OUT Page 6

NON-DIM CLEARANCE DISTRIBUTION(H/C) FOR PAD NUMBER 1

I =		13	14	15	16
AXIAL LENGTH IN.		1.860	1.900	1.950	2.000
J	DEG.				
1	5.0	1.00	1.00	1.00	1.00
2	10.0	1.00	1.00	1.00	1.00
3	15.0	1.00	1.00	1.00	1.00
4	20.0	1.00	1.00	1.00	1.00
5	21.0	1.00	1.00	1.00	1.00
6	22.0	1.00	1.00	1.00	1.00
7	23.0	1.00	1.00	1.00	1.00
8	24.0	1.00	1.00	1.00	1.00
9	26.0	1.00	1.00	1.00	1.00
10	28.0	1.00	1.00	1.00	1.00
11	30.0	1.00	1.00	1.00	1.00
12	30.1	1.00	1.00	1.00	1.00
13	30.5	1.00	1.00	1.00	1.00
14	31.0	1.00	1.00	1.00	1.00
15	32.0	1.00	1.00	1.00	1.00
16	34.0	1.00	1.00	1.00	1.00
17	36.0	1.00	1.00	1.00	1.00
18	37.0	1.00	1.00	1.00	1.00
19	38.0	1.00	1.00	1.00	1.00
20	39.0	1.00	1.00	1.00	1.00
21	40.0	1.00	1.00	1.00	1.00

MIN. CLEAR.= 1.0000 AT 40.000 DEGREES

MAX. CLEAR.= 41.000 AT 30.000 DEGREES

Figure 6-6 (Cont.)

05/24/1993 11:49 Filename: REC1.OUT Page 7

PRESSURE DISTRIBUTION (PSI) FOR PAD NUMBER 1

I =	1	2	3	4	5	6
AXIAL LENGTH IN.	1.250	1.300	1.350	1.400	1.410	1.420
J DEG.						
1 5.0	0.000E+00	0.000E+00	0.000E+00	0.000E+00	0.000E+00	0.000E+00
2 10.0	0.000E+00	25.9	39.5	48.6	50.0	51.3
3 15.0	0.000E+00	45.1	67.0	81.7	83.8	85.7
4 20.0	0.000E+00	64.2	96.9	125.	131.	131.
5 21.0	0.000E+00	65.7	98.8	126.	131.	131.
6 22.0	0.000E+00	66.7	99.9	126.	131.	131.
7 23.0	0.000E+00	67.3	100.	126.	131.	131.
8 24.0	0.000E+00	67.6	101.	126.	131.	131.
9 26.0	0.000E+00	67.1	100.	126.	131.	131.
10 28.0	0.000E+00	65.2	98.2	126.	131.	131.
11 30.0	0.000E+00	60.9	92.5	122.	131.	131.
12 30.1	0.000E+00	60.6	92.1	121.	128.	129.
13 30.5	0.000E+00	59.3	90.0	117.	121.	123.
14 31.0	0.000E+00	57.5	87.0	111.	114.	117.
15 32.0	0.000E+00	53.5	80.4	100.	103.	105.
16 34.0	0.000E+00	44.1	65.9	80.9	83.1	85.0
17 36.0	0.000E+00	33.4	50.4	61.8	63.5	65.1
18 37.0	0.000E+00	27.3	41.7	51.4	52.8	54.2
19 38.0	0.000E+00	20.5	31.9	39.6	40.7	41.8
20 39.0	0.000E+00	12.2	19.7	24.9	25.7	26.4
21 40.0	0.000E+00	0.000E+00	0.000E+00	0.000E+00	0.000E+00	0.000E+00

05/24/1993 11:49 Filename: REC1.OUT Page 8

PRESSURE DISTRIBUTION (PSI) FOR PAD NUMBER 1

I =	7	8	9	10	11	12
AXIAL LENGTH IN.	1.430	1.450	1.550	1.700	1.840	1.850
J DEG.						
1 5.0	0.000E+00	0.000E+00	0.000E+00	0.000E+00	0.000E+00	0.000E+00
2 10.0	52.4	54.4	59.6	57.1	44.0	42.5
3 15.0	87.3	90.1	95.9	93.4	77.9	75.6
4 20.0	131.	131.	131.	131.	131.	125.
5 21.0	131.	131.	131.	131.	131.	126.
6 22.0	131.	131.	131.	131.	131.	126.
7 23.0	131.	131.	131.	131.	131.	126.
8 24.0	131.	131.	131.	131.	131.	126.
9 26.0	131.	131.	131.	131.	131.	126.
10 28.0	131.	131.	131.	131.	131.	126.
11 30.0	131.	131.	131.	131.	131.	123.
12 30.1	130.	130.	130.	130.	129.	122.
13 30.5	125.	126.	127.	127.	122.	117.
14 31.0	118.	120.	123.	122.	114.	110.
15 32.0	107.	110.	114.	113.	101.	97.6
16 34.0	86.8	89.7	95.1	93.3	78.8	76.5
17 36.0	66.5	68.9	74.1	72.3	58.9	57.1
18 37.0	55.4	57.5	62.2	60.5	48.5	46.9
19 38.0	42.8	44.5	48.4	47.0	37.1	35.8
20 39.0	27.1	28.3	31.0	30.0	23.1	22.3
21 40.0	0.000E+00	0.000E+00	0.000E+00	0.000E+00	0.000E+00	0.000E+00

Figure 6-6 (Cont.)

PRESSURE DISTRIBUTION (PSI) FOR PAD NUMBER 1

	I = 13	14	15	16
AXIAL LENGTH IN.	1.860	1.900	1.950	2.000
J DEG.				
1 5.0	0.000E+00	0.000E+00	0.000E+00	0.000E+00
2 10.0	40.9	33.5	21.1	0.000E+00
3 15.0	73.0	60.7	39.9	0.000E+00
4 20.0	119.	96.4	63.1	0.000E+00
5 21.0	121.	98.1	64.6	0.000E+00
6 22.0	121.	98.9	65.4	0.000E+00
7 23.0	121.	99.4	65.8	0.000E+00
8 24.0	121.	99.5	66.0	0.000E+00
9 26.0	121.	99.3	65.7	0.000E+00
10 28.0	120.	97.8	64.3	0.000E+00
11 30.0	117.	92.5	60.1	0.000E+00
12 30.1	116.	92.0	59.8	0.000E+00
13 30.5	112.	89.5	58.3	0.000E+00
14 31.0	106.	86.0	56.2	0.000E+00
15 32.0	94.3	78.0	51.3	0.000E+00
16 34.0	73.9	61.6	40.5	0.000E+00
17 36.0	55.1	45.7	29.6	0.000E+00
18 37.0	45.3	37.4	23.8	0.000E+00
19 38.0	34.5	28.2	17.6	0.000E+00
20 39.0	21.4	17.2	10.3	0.000E+00
21 40.0	0.000E+00	0.000E+00	0.000E+00	0.000E+00

MIN. PRESS= 0.00000E+00 AT 40.000 DEGREES

MAX. PRESS= 131.02 AT 23.000 DEGREES

GFACE -V1.0- RECESS SEAL

-JOURNAL POSITION & FORCES

MINIMUM CLEARANCE	=	0.000500	IN
LOAD CAPACITY	=	54.53	LB
MOMENT ABOUT X-X	=	35.57	IN-LB
MOMENT ABOUT Y-Y	=	-81.29	IN-LB
POWER LOSS	=	0.0000E+00	HP
LEAKAGE AT INNER	=	-0.6005E-04	LB/S
LEAKAGE AT OUTER	=	0.8530E-04	LB/S

-STIFFNESS COEFFICIENTS

PRINCIPAL Z	KZZ	=	0.1495E+06	LB/IN
CROSS-COUPLED	KZA	=	0.1008E+06	LB/RAD
CROSS-COUPLED	KZB	=	-0.2223E+06	LB/RAD
CROSS-COUPLED	KAZ	=	0.9742E+05	IN-LB/IN
PRINCIPAL A	KAA	=	0.6783E+05	IN-LB/RAD
CROSS-COUPLED	KAB	=	-0.1443E+06	IN-LB/RAD
CROSS-COUPLED	KBZ	=	-0.2230E+06	IN-LB/IN
CROSS-COUPLED	KBA	=	-0.1498E+06	IN-LB/RAD
PRINCIPAL B	KBB	=	0.3326E+06	IN-LB/RAD

-DAMPING COEFFICIENTS

PRINCIPAL Z	DZZ	=	-113.8	LB-S/IN
CROSS-COUPLED	DZA	=	-78.23	LB-S/RAD
CROSS-COUPLED	DZB	=	168.6	LB-S/RAD

CROSS-COUPLED	DAZ	=	-74.09	IN-LB-S/IN
PRINCIPAL A	DAA	=	-50.82	IN-LB-S/RAD
CROSS-COUPLED	DAB	=	109.8	IN-LB-S/RAD
CROSS-COUPLED	DBZ	=	0.8484E-01	IN-LB-S/IN
CROSS-COUPLED	DBA	=	116.7	IN-LB-S/RAD
PRINCIPAL B	DBB	=	-251.4	IN-LB-S/RAD

GFACE -V1.0- RECESS SEAL

ECHO OF INPUT

NO MORE INPUT, PROGRAM TERMINATED

Figure 6-6 (Cont.)

$$f_b = 386.4\, A_o\, C_D\, G_1\, P_S \left\{ \left(\frac{P_r}{P_s}\right)^{\frac{2}{\gamma}} \left[1 - \left(\frac{P_r}{P_s}\right)^{\frac{\gamma-1}{\gamma}} \right] \right\}^{\frac{1}{2}}$$

$$A_o = orifice\ area = \frac{\pi d_o^{\,2}}{4} = \frac{\pi 0.010^2}{4} = 7.854\ x\ 10^{-5}$$

$$C_D = Coefficient\ of\ Discharge = 0.9$$

$$\frac{P_r}{P_s} = \frac{recess\ pressure}{supply\ pressure} = \frac{131+14.7}{200+14.7} = 0.678621$$

$$G_1 = \sqrt{\frac{2\gamma}{G_c \Theta(\gamma-1)}}$$

$$where\ \gamma = ratio\ of\ specific\ heats = 1.4$$

$$G_c = gas\ constant = 246{,}900\ \frac{in^2}{s^2 -^o R}$$

$$\Theta = absolute\ temperature = 1460^0 R$$

$$f_b = 386.4x7.854x10^{-5}x0.9x1.3935x10^{-4}x214.7$$

$$x\left\{ (0.678621)^{\frac{2}{1.4}} \left[1 - (0.678621)^{\frac{0.4}{1.4}} \right] \right\}^{\frac{1}{2}} = 2.006x10^{-4}\ \frac{lbs}{s}$$

The correlation between the exit and inlet flows is excellent.

A check on the stiffness can be made, at zero excitation frequency, by checking the stiffness values against incremental displacements in the three degrees of freedom. A Rayleigh -step pad was examined with an input map as shown on Figure 6-7. The output for aligned operation is shown on Figure 6-8. Table 6-4 shows the results of the displacements on Forces and Moments.

Table 6-4
Forces and Moments as a Function of Displacements
$\delta z = 0.0001$ in, $\delta\alpha = 0.0001$ deg., $\delta\beta = 0.0001$ deg

Displacement	0	Z	α	β
Axial Force, F_Z lbs	4.861	4.531	4.854	4.869
Moment about x-axis, M_{XX} in-lbs	3.838	3.571	3.832	3.844

```
05/20/1993  10:28        Filename: FEX1.INP                    Page   1

FEX1
RAYLEIGH STEP BEARING (SINGLE PAD)  EXAMPLE #1
*
NPAD          1
OPTION        1.
*
STIFFNESS     .0001
DIAGNOS       1.
VGRIDM        12
    1.25  1.30  1.35  1.40 1.41 1.55 1.70
    1.84  1.85  1.90  1.95  2.00
VGRIDN        16
     5.  10.  15.  20.  24.  26.  28.  30.  30.1
    32.  34.  36.  37.  38.  39.  40.
*
CLEARANCE    0.0002
STEP          1
             .0004 5 1 8 8
SPHEAT       1.4
GASCONST     2.469E5
ABSTEMP      1460.
VISCOSITY    0.535E-8
TOLERA        0.001
SPEED        5000.
PO            14.7
PLEFT          0.
PRITE          0.
PTOP           0.
PBOT           0.
END
```

Figure 6-7 Stiffness Verification, Rayleigh-Step Pad, Input File

```
05/20/1993  10:29        Filename: FEX1.OUT                                  Page   1

GFACE -V1.0-   RAYLEIGH STEP BEARING (SINGLE PAD)  EXAMPLE #1


ECHO OF INPUT

*
NPAD      =    1          NUMBER OF PADS
OPTION    =    1          GIVEN CLEARANCE FIND LOAD CAPACITY
*
ISTIF     =    1          STIFFNESS CALCULATION
EXCITATION SPEED, RPM  =        0.0001
DIAGNOSTIC=   1.          DIAGNOSTIC OUTPUT
GRIDM     =   12          GRID POINTS IN RADIAL DIRECTION
VARIABLE GRID IN AXIAL DIRECTION
   1.250       1.300       1.350       1.400       1.410
   1.550       1.700       1.840       1.850       1.900
   1.950       2.000
GRIDN     =   16          GRID POINTS IN CIRCUMFERENTIAL DIRECTION
VARIABLE GRID IN CIRCUMFERENTIAL DIRECTION
   5.000       10.00       15.00       20.00       24.00
   26.00       28.00       30.00       30.10       32.00
   34.00       36.00       37.00       38.00       39.00
   40.00
*
CLEARANCE =  0.000200     BEARING CLEARANCE
RAYLEIGH STEP
STEP HEIGHT =      0.00040          IL =     5     JL =     1     IR =     8
JR =    8
SPECIFIC  =    1.4000     SPECIFIC HEAT RATIO
GAS CONST =  246900.0     GAS CONSTANT
ABS TEMP  =   1460.00     ABSOLUTE TEMPERATURE
VISCOSITY =  0.5350E-08   ABSOLUTE VISCOSITY
TOL1      =    0.0010     TOLERANCE(COMPRESSIBILITY)
TOL2      =    0.0000     ITERATION(OPTION 2)
SPEED     =   5000.00     ROTATIONAL SPEED IN RPM
PO        =     14.70     REFERENCE(AMBIENT)  PRESSURE
PLEFT     =      0.00     GAGE PRESSURE AT LEFT BOUNDARY
PRITE     =      0.00     GAGE PRESSURE AT RIGHT BOUNDARY
PTOP      =      0.00     GAGE PRESSURE AT TOP BOUNDARY
PBOT      =      0.00     GAGE PRESSURE AT BOTTOM BOUNDARY

GFACE -V1.0-   RAYLEIGH STEP BEARING (SINGLE PAD)  EXAMPLE #1


GAS THRUST BEARING/SEAL


-BEARING GEOMETRY
 NUMBER OF PADS =     1
 OUTER DIAMETER =     4.000 IN
 INNER DIAMETER =     2.500 IN
      CLEARANCE =  0.000200 IN
 STARTING ANGLE =     5.00 DEG
      PAD ANGLE =    35.00 DEG

-LUBRICANT PROPERTIES
              VISCOSITY =  0.5350000E-08 LB-S/IN**2
           GAS CONSTANT =   246900.0     IN**2/S**2-R
      ABS. TEMPERATURE =   1460.000      DEG R
```

```
05/20/1993  10:29        Filename: FEX1.OUT                                  Page   2

-BOUNDARY CONDITIONS
    REFERENCE P =    14.70000      PSI
          PLEFT =  0.0000000E+00 PSI
          PRITE =  0.0000000E+00 PSI
           PTOP =  0.0000000E+00 PSI
           PBOT =  0.0000000E+00 PSI
          SPEED =   5000.000      RPM

-BEARING MODEL
              M =   12
              N =   16
         JOINED =    F

DZ
0.250E-01 0.250E-01 0.250E-01 0.500E-02 0.700E-01
0.750E-01 0.700E-01 0.500E-02 0.250E-01 0.250E-01
0.250E-01 0.250E-01

DTHETA
0.873E-01 0.873E-01 0.873E-01 0.698E-01 0.349E-01
0.349E-01 0.349E-01 0.175E-02 0.332E-01 0.349E-01
0.349E-01 0.175E-01 0.175E-01 0.175E-01 0.175E-01
0.175E-01

GFACE -V1.0-   RAYLEIGH STEP BEARING (SINGLE PAD)  EXAMPLE #1


-MAXIMUM NUMBER OF ITERATIONS
   MXIT1 =   10       (FOR COMPRESSIBILITY)
   MXIT2 =    5       (FOR OPTION 2)

-TOLERANCE
    TOL1 =   0.00100  (FOR COMPRESSIBILITY)
    TOL2 =   0.01000  (FOR OPTION 2)

-OPTION  =    1       GIVEN CLEARANCE  FIND LOAD CAPACITY
```

Figure 6-8 Stiffness Verification, Rayleigh-Step Pad, Output File

05/20/1993 10:29 Filename: FEX1.OUT Page 3

NON-DIM CLEARANCE DISTRIBUTION(H/C) FOR PAD NUMBER 1

I =		1	2	3	4	5	6
AXIAL LENGTH IN.		1.250	1.300	1.350	1.400	1.410	1.550
J	DEG.						
1	5.0	1.00	1.00	1.00	1.00	3.00	3.00
2	10.0	1.00	1.00	1.00	1.00	3.00	3.00
3	15.0	1.00	1.00	1.00	1.00	3.00	3.00
4	20.0	1.00	1.00	1.00	1.00	3.00	3.00
5	24.0	1.00	1.00	1.00	1.00	3.00	3.00
6	26.0	1.00	1.00	1.00	1.00	3.00	3.00
7	28.0	1.00	1.00	1.00	1.00	3.00	3.00
8	30.0	1.00	1.00	1.00	1.00	3.00	3.00
9	30.1	1.00	1.00	1.00	1.00	1.00	1.00
10	32.0	1.00	1.00	1.00	1.00	1.00	1.00
11	34.0	1.00	1.00	1.00	1.00	1.00	1.00
12	36.0	1.00	1.00	1.00	1.00	1.00	1.00
13	37.0	1.00	1.00	1.00	1.00	1.00	1.00
14	38.0	1.00	1.00	1.00	1.00	1.00	1.00
15	39.0	1.00	1.00	1.00	1.00	1.00	1.00
16	40.0	1.00	1.00	1.00	1.00	1.00	1.00

05/20/1993 10:29 Filename: FEX1.OUT Page 4

NON-DIM CLEARANCE DISTRIBUTION(H/C) FOR PAD NUMBER 1

I =		7	8	9	10	11	12
AXIAL LENGTH IN.		1.700	1.840	1.850	1.900	1.950	2.000
J	DEG.						
1	5.0	3.00	3.00	1.00	1.00	1.00	1.00
2	10.0	3.00	3.00	1.00	1.00	1.00	1.00
3	15.0	3.00	3.00	1.00	1.00	1.00	1.00
4	20.0	3.00	3.00	1.00	1.00	1.00	1.00
5	24.0	3.00	3.00	1.00	1.00	1.00	1.00
6	26.0	3.00	3.00	1.00	1.00	1.00	1.00
7	28.0	3.00	3.00	1.00	1.00	1.00	1.00
8	30.0	3.00	3.00	1.00	1.00	1.00	1.00
9	30.1	1.00	1.00	1.00	1.00	1.00	1.00
10	32.0	1.00	1.00	1.00	1.00	1.00	1.00
11	34.0	1.00	1.00	1.00	1.00	1.00	1.00
12	36.0	1.00	1.00	1.00	1.00	1.00	1.00
13	37.0	1.00	1.00	1.00	1.00	1.00	1.00
14	38.0	1.00	1.00	1.00	1.00	1.00	1.00
15	39.0	1.00	1.00	1.00	1.00	1.00	1.00
16	40.0	1.00	1.00	1.00	1.00	1.00	1.00

MIN. CLEAR.= 1.0000 AT 40.000 DEGREES

MAX. CLEAR.= 3.0000 AT 30.000 DEGREES

Figure 6-8 (Cont.)

05/20/1993 10:29 Filename: FEX1.OUT Page 5

PRESSURE DISTRIBUTION (PSI) FOR PAD NUMBER 1

I =	1	2	3	4	5	6
AXIAL LENGTH IN.	1.250	1.300	1.350	1.400	1.410	1.550
J DEG.						
1 5.0	0.000E+00	0.000E+00	0.000E+00	0.000E+00	0.000E+00	0.000E+00
2 10.0	0.000E+00	0.110	0.354	0.977	1.20	1.17
3 15.0	0.000E+00	0.485	1.31	2.86	3.31	3.29
4 20.0	0.000E+00	1.35	3.19	5.93	6.63	6.71
5 24.0	0.000E+00	2.52	5.45	9.26	10.2	10.4
6 26.0	0.000E+00	3.21	6.76	11.1	12.1	12.6
7 28.0	0.000E+00	4.00	8.17	13.1	14.2	15.0
8 30.0	0.000E+00	4.75	9.44	14.9	16.3	17.5
9 30.1	0.000E+00	4.78	9.50	14.9	16.2	17.5
10 32.0	0.000E+00	5.21	9.84	14.2	14.9	17.3
11 34.0	0.000E+00	5.35	9.70	13.3	13.9	16.8
12 36.0	0.000E+00	5.12	9.08	12.2	12.7	15.9
13 37.0	0.000E+00	4.81	8.47	11.3	11.8	15.1
14 38.0	0.000E+00	4.20	7.41	9.90	10.3	13.5
15 39.0	0.000E+00	2.97	5.33	7.22	7.53	10.3
16 40.0	0.000E+00	0.000E+00	0.000E+00	0.000E+00	0.000E+00	0.000E+00

05/20/1993 10:29 Filename: FEX1.OUT Page 6

PRESSURE DISTRIBUTION (PSI) FOR PAD NUMBER 1

I =	7	8	9	10	11	12
AXIAL LENGTH IN.	1.700	1.840	1.850	1.900	1.950	2.000
J DEG.						
1 5.0	0.000E+00	0.000E+00	0.000E+00	0.000E+00	0.000E+00	0.000E+00
2 10.0	1.01	0.864	0.676	0.206	0.516E-01	0.000E+00
3 15.0	3.00	2.69	2.26	0.894	0.287	0.000E+00
4 20.0	6.41	5.97	5.23	2.52	0.955	0.000E+00
5 24.0	10.3	9.87	8.87	4.84	2.06	0.000E+00
6 26.0	12.7	12.3	11.1	6.29	2.76	0.000E+00
7 28.0	15.4	15.1	13.8	8.08	3.67	0.000E+00
8 30.0	18.4	18.3	16.7	10.1	4.83	0.000E+00
9 30.1	18.4	18.1	16.7	10.2	4.89	0.000E+00
10 32.0	18.0	16.3	15.5	10.7	5.54	0.000E+00
11 34.0	17.5	15.0	14.4	10.5	5.75	0.000E+00
12 36.0	16.7	13.9	13.4	10.0	5.65	0.000E+00
13 37.0	15.9	13.3	12.8	9.71	5.53	0.000E+00
14 38.0	14.6	12.3	11.9	9.15	5.29	0.000E+00
15 39.0	11.5	10.2	9.87	7.79	4.65	0.000E+00
16 40.0	0.000E+00	0.000E+00	0.000E+00	0.000E+00	0.000E+00	0.000E+00

MIN. PRESS= 0.00000E+00 AT 40.000 DEGREES

MAX. PRESS= 18.395 AT 30.000 DEGREES

GFACE -V1.0- RAYLEIGH STEP BEARING (SINGLE PAD) EXAMPLE #1

-JOURNAL POSITION & FORCES

MINIMUM CLEARANCE	=	0.000200	IN
LOAD CAPACITY	=	4.861	LB
MOMENT ABOUT X-X	=	3.838	IN-LB
MOMENT ABOUT Y-Y	=	-6.946	IN-LB
POWER LOSS	=	0.1890E-02	HP
LEAKAGE AT INNER	=	-0.8106E-07	LB/S
LEAKAGE AT OUTER	=	0.1256E-06	LB/S

-STIFFNESS COEFFICIENTS

PRINCIPAL Z	KZZ	=	0.3457E+05	LB/IN
CROSS-COUPLED	KZA	=	0.3990E+05	LB/RAD
CROSS-COUPLED	KZB	=	-0.4420E+05	LB/RAD
CROSS-COUPLED	KAZ	=	0.2793E+05	IN-LB/IN
PRINCIPAL A	KAA	=	0.3175E+05	IN-LB/RAD
CROSS-COUPLED	KAB	=	-0.3584E+05	IN-LB/RAD
CROSS-COUPLED	KBZ	=	-0.4898E+05	IN-LB/IN
CROSS-COUPLED	KBA	=	-0.5715E+05	IN-LB/RAD
PRINCIPAL B	KBB	=	0.6271E+05	IN-LB/RAD

-DAMPING COEFFICIENTS

PRINCIPAL Z	DZZ	=	2.566	LB-S/IN
CROSS-COUPLED	DZA	=	-18.35	LB-S/RAD
CROSS-COUPLED	DZB	=	-11.70	LB-S/RAD
CROSS-COUPLED	DAZ	=	1.468	IN-LB-S/IN
PRINCIPAL A	DAA	=	-13.12	IN-LB-S/RAD
CROSS-COUPLED	DAB	=	-7.997	IN-LB-S/RAD
CROSS-COUPLED	DBZ	=	-0.8108E-03	IN-LB-S/IN

Figure 6-8 (Cont.)

```
05/20/1993  10:29        Filename: FEX1.OUT                          Page   7

   CROSS-COUPLED     DBA =   26.64     IN-LB-S/RAD
   PRINCIPAL  B      DBB =   18.03     IN-LB-S/RAD


 GFACE -V1.0-   RAYLEIGH STEP BEARING (SINGLE PAD)  EXAMPLE #1


 ECHO OF INPUT

NO MORE INPUT, PROGRAM TERMINATED
```

Figure 6-8 (Cont.)

Moment about Y-axis, M_{yy} in-lbs	-6.946	-6.479	-6.936	6.957

The stiffness is computed by subtracting the equilibrium values from the displaced values and dividing by the displacement. Since a positive displacement results in a negative force differential, the quantities are multiplied by -1 to maintain the accepted stiffness sign convention. Table 6-5 below compares the computed values of stiffness as calculated by the code against those manually computed by the above procedure. The top value is computed by exercising the stiffness option of the code and the bottom value is the manually computed number. The corroboration is excellent. Additional runs were made with full 360° pads with similar results.

Table 6-5
Stiffness Comparisons Between Automatic and Manual Computed Values
Rayleigh-step Pad
$\delta z = 0.0001$ in, $\delta\alpha = 0.0001$ deg., $\delta\beta = 0.0001$ deg

K_{zz}	$K_{\alpha z}$	$K_{\beta z}$
34,570	27,930	-48,980
33,000	26,700	-46,700
$K_{z\alpha}$	$K_{\alpha\alpha}$	$K_{\beta\alpha}$
39,900	31,750	-57,150
40,107	34,377	-57296
$K_{z\beta}$	$K_{\alpha\beta}$	$K_{\beta\beta}$
-44,200	-35,840	62,710
-45,836	-34,337	63,025

7.0 OPERATING ENVIRONMENT

The code GFACE has been produced with a WATCOM compiler under an OS/2 operating system. The code will operate with many other compilers with a minimum of modification. GFACE includes two features that are supported by a wide variety of compilers that are extensions of FORTRAN 77. The first of these is the use of an INCLUDE file called GFCOM.FIN. Many of the subroutines reference this file, which contains a one line parameter statement for dimensioning grid dependent arrays that control the memory requirements of the program. The size of the grid in the axial direction is 51 and in the circumferential direction the maximum number of grid points is 361. Users with compilers that do not support an INCLUDE statement can replace this statement with the entire GFCOM.FIN file. The second extension relates to the implementation of complex double precision variables to compute frequency dependent stiffness and damping values. These extensions are part of both the IBM Systems Application Architecture and VAX extensions to FORTRAN 77. The executable file of the program takes 342,188 bytes.

8.0 ERROR and STATUS MESSAGES

When running the program, status and error messages are printed on the screen. A summary of these messages follows:

Status Messages

'NOT A VALID KEYWORD' - An input parameter was not correctly specified.

'NO MORE INPUT, PROGRAM TERMINATED' - Occurs at the conclusion of a run, and no further input is designated.

'***** GFACE Analysis Code Running *****'- Lets the user know that the code has accepted the input an has begun the run.

' Reading Input File For Case: 'Lets the user know that the input is being read.

' beginning main computations' Occurs after the input is read and computations are started.

' *** GFACE Analysis Code Complete ***' The analysis has completed for a particular case.

'ITERATION # 'Occurs for OPTION =2 and provides the load iteration number.

'LOAD CONVERGENCE WAS NOT ACHEIVED WITHIN '
'ITERATIONS'
'THE FINAL PERCENTAGE ERROR WAS = ' Occurs when OPTION =2 and load convergence was not acheived in the number of iterations specified.

Error Messages

'GFINP1 - Error Reading From Input File: GFACE.INP' - An error exists in the input file, either in the parameter designation or inthe numerical format.

' Error Reading Title From Input File' The title was not inserted properly in line 2 of the input file.

' Error Reading Output Filename From Input File: 'The output file name must be included in line one of the input file. The name applies as well to the graphics. The name cannot be greater than 7 letters.

' RDLINE -- Error Reading Line From Input File '

The following diagnostics apply to writing to an output file. The name of the subroutine is first provided followed by a description of the diagnostic.

' GFOUT1 -- Error Writing To Output File: xxxx.OUT '
'GFINP1 - Error Writing To Output File: xxxx.OUT'
' GFOUT2 -- Error Writing To Output File: xxxx.OUT'
' WTITLE -- Error Writing To Output File: xxxx.OUT'
' GFOPTA -- Error Writing To Output File: xxxx.OUT '
' GJBRG -- Error Writing To Output File: xxxxxx.OUT '
' FLOA1 -- Error Writing To Output File: xxxx.OUT '
' FLOAN -- Error Writing To Output File: xxxxxx.OUT '
' PBNEW -- Error Writing To Output File: xxxx.OUT '
' DIST -- Error Writing To Output File: xxxx.OUT'
' GFOPTA -- Error Writing To Output Pressure File: xxxx.HP'
' COLP -- Error Writing To Output File: xxxx.OUT '
' Illegal output file '
' Error Opening Output File: '

The following represents errors in reading an initial pressure file with the FILE option of the code. The error message is preceded by the subroutine name where the error occured.

' GFOUT2 -- Error Reading From Pressure File: xxxx.HP '
' SETPRS -- Error Reading From Pressure File: xxxx.HP '
' CGCOPTA -- Error Reading From Pressure File: XXXX.HP '

The following is an error code generated during writing of the pressure or clearance distribution to the .HP file (The .HP file is used for plotting).

' HPFILE -- Error Writing To Pressure File: xxxx.HPF '

The following messages are displayed when a buffer write can not be completed. The error message is preceded by the subroutine name where the error occured.

' Error Writing To Internal Buffer '
' GFOPTA -- Error Writing To Internal Buffer '
' GJBRG -- Error Writing To Internal Buffer '
' PBNEW -- Error Writing To Internal Buffer '
' CGCOPTA -- Error Writing To Internal Buffer '

' NEGATIVE FILM ENCOUNTERED' Implies that displacements are to large and the clearance is consumed. The code aborts at this point.

' !!ABORTED, NEGATIVE FILM ENCOUNTERED IN STIFFNESS '
'COMPUTATION' Negative stiffness occurs during a stiffness computation.

The following message occurs when the pressure cannot converge within the iterations specified.

```
'!!CALCULATION DID NOT CONVERGE FOR COMPRESSIBLE FLOW'
' AFTER ',I4,' ITERATIONS'
'NO. OF GRID POINTS DID NOT CONVERGE '
```

REPORT DOCUMENTATION PAGE

Form Approved
OMB No. 0704-0188

Public reporting burden for this collection of information is estimated to average 1 hour per response, including the time for reviewing instructions, searching existing data sources, gathering and maintaining the data needed, and completing and reviewing the collection of information. Send comments regarding this burden estimate or any other aspect of this collection of information, including suggestions for reducing this burden, to Washington Headquarters Services, Directorate for Information Operations and Reports, 1215 Jefferson Davis Highway, Suite 1204, Arlington, VA 22202-4302, and to the Office of Management and Budget, Paperwork Reduction Project (0704-0188), Washington, DC 20503.

1. AGENCY USE ONLY (*Leave blank*)

2. REPORT DATE
October 2005

3. REPORT TYPE AND DATES COVERED
Final Contractor Report

4. TITLE AND SUBTITLE
Users' Manual for Computer Code GFACE
Gas Lubricated Face Seals

5. FUNDING NUMBERS
WU–506–42–31–00
WU–590–21–11–00
NAS3–25644

6. AUTHOR(S)
Wilbur Shapiro

7. PERFORMING ORGANIZATION NAME(S) AND ADDRESS(ES)
Mechanical Technology, Inc.
968 Albany Shaker Road
Latham, New York 12110

8. PERFORMING ORGANIZATION REPORT NUMBER
E–13623

9. SPONSORING/MONITORING AGENCY NAME(S) AND ADDRESS(ES)
National Aeronautics and Space Administration
Washington, DC 20546–0001

10. SPONSORING/MONITORING AGENCY REPORT NUMBER
NASA CR—2003-212363
93TM5

11. SUPPLEMENTARY NOTES
Project Manager, Anita D. Liang, Aeropropulsion Projects Office, NASA Glenn Research Center, organization code P, 216–977–7439.

12a. DISTRIBUTION/AVAILABILITY STATEMENT
Restriction changed to Unclassified/Unlimited on July 27, 2005, by authority of the NASA Glenn Research Center, Structures Division.

~~**Export Administration Regulations (EAR) Notice**~~
~~This document contains information within the purview of the Export Administration Regulations (EAR), 15 CFR 730–774, and is export controlled. It may not be transferred to foreign nationals in the U.S. or abroad without specific approval of a knowledgeable NASA export control official, and/or unless an export license/license exception is obtained/available from the Bureau of Industry and Security, United States Department of Commerce. Violations of these regulations are punishable by fine, imprisonment, or both.~~

Unclassified-Unlimited
Subject Category: 34
Available electronically at http://gltrs.grc.nasa.gov
This publication is available from the NASA Center for AeroSpace Information, 301–621–0390.

12b. DISTRIBUTION CODE

13. ABSTRACT ***(Maximum 200 words)***
The program GFACE (an acronym for gas lubricated face) is used to analyze a variety of seals that can be defined in a polar coordinate reference frame. The capabilities of the program include the following: varying geometries; variable or constant grid representation; specified boundary pressures or circumferential periodic boundaries; axial symmetry option; three degrees of freedom; external pressurization (hydrostatic) of inherently compensated orifices; and choice of English or SI units. The output of the program includes: clearance distribution; pressure distribution; leakage along specified flow paths; load capacity; righting moments; viscous dissipation; cross-coupled, frequency dependent, stiffness and damping coefficients; and plotting routines for the pressure and clearance distribution. This users' manual describes the theory, numerical methods, program organization, inputs, sample problems and verification of the code.

14. SUBJECT TERMS
Seals; Face seals; Gas lubricated; Leakage; Users' manual

15. NUMBER OF PAGES
221

16. PRICE CODE

17. SECURITY CLASSIFICATION OF REPORT
Unclassified

18. SECURITY CLASSIFICATION OF THIS PAGE
Unclassified

19. SECURITY CLASSIFICATION OF ABSTRACT
Unclassified

20. LIMITATION OF ABSTRACT