NASA/CR—2003-212362 94TM10

Users' Manual for Computer Code GCYLT

Gas Lubricated Cylindrical Seals, Laminar and Turbulent

Wilbur Shapiro
Mechanical Technology, Inc., Latham, New York

Restriction changed to Unclassified/Unlimited on July 27, 2005, by authority of the NASA Glenn Research Center, Structures Division.

Export Administration Regulations (EAR) Notice

This document contains information within the purview of the Export Administration Regulations (EAR), 15 CFR 730–774, and is export controlled. It may not be transferred to foreign nationals in the U.S. or abroad without specific approval of a knowledgeable NASA export control official, and/or unless an export license/license exception is obtained/available from the Bureau of Industry and Security, United States Department of Commerce. Violations of these regulations are punishable by fine, imprisonment, or both.

October 2005

The NASA STI Program Office . . . in Profile

Since its founding, NASA has been dedicated to the advancement of aeronautics and space science. The NASA Scientific and Technical Information (STI) Program Office plays a key part in helping NASA maintain this important role.

The NASA STI Program Office is operated by Langley Research Center, the Lead Center for NASA's scientific and technical information. The NASA STI Program Office provides access to the NASA STI Database, the largest collection of aeronautical and space science STI in the world. The Program Office is also NASA's institutional mechanism for disseminating the results of its research and development activities. These results are published by NASA in the NASA STI Report Series, which includes the following report types:

- TECHNICAL PUBLICATION. Reports of completed research or a major significant phase of research that present the results of NASA programs and include extensive data or theoretical analysis. Includes compilations of significant scientific and technical data and information deemed to be of continuing reference value. NASA's counterpart of peer-reviewed formal professional papers but has less stringent limitations on manuscript length and extent of graphic presentations.

- TECHNICAL MEMORANDUM. Scientific and technical findings that are preliminary or of specialized interest, e.g., quick release reports, working papers, and bibliographies that contain minimal annotation. Does not contain extensive analysis.

- CONTRACTOR REPORT. Scientific and technical findings by NASA-sponsored contractors and grantees.

- CONFERENCE PUBLICATION. Collected papers from scientific and technical conferences, symposia, seminars, or other meetings sponsored or cosponsored by NASA.

- SPECIAL PUBLICATION. Scientific, technical, or historical information from NASA programs, projects, and missions, often concerned with subjects having substantial public interest.

- TECHNICAL TRANSLATION. English-language translations of foreign scientific and technical material pertinent to NASA's mission.

Specialized services that complement the STI Program Office's diverse offerings include creating custom thesauri, building customized databases, organizing and publishing research results . . . even providing videos.

For more information about the NASA STI Program Office, see the following:

- Access the NASA STI Program Home Page at ***http://www.sti.nasa.gov***

- E-mail your question via the Internet to help@sti.nasa.gov

- Fax your question to the NASA Access Help Desk at 301–621–0134

- Telephone the NASA Access Help Desk at 301–621–0390

- Write to:
  NASA Access Help Desk
  NASA Center for AeroSpace Information
  7121 Standard Drive
  Hanover, MD 21076

NASA/CR—2003-212362 94TM10

Users' Manual for Computer Code GCYLT

Gas Lubricated Cylindrical Seals, Laminar and Turbulent

Wilbur Shapiro
Mechanical Technology, Inc., Latham, New York

Restriction changed to Unclassified/Unlimited on July 27, 2005, by authority of the NASA Glenn Research Center, Structures Division.

Export Administration Regulations (EAR) Notice

This document contains information within the purview of the Export Administration Regulations (EAR), 15 CFR 730–774, and is export controlled. It may not be transferred to foreign nationals in the U.S. or abroad without specific approval of a knowledgeable NASA export control official, and/or unless an export license/license exception is obtained/available from the Bureau of Industry and Security, United States Department of Commerce. Violations of these regulations are punishable by fine, imprisonment, or both.

Prepared under Contract NAS3–25644

National Aeronautics and
Space Administration

Glenn Research Center

October 2005

Document History

The source and executable files for the CFD Seal Analysis Industrial Codes, of which this is a part, were released as LEW–16582 in 1998. This report was originally published by Mechanical Technology, Inc., in January 1995.

Document Availability Change Notice

NASA/CR—2003-212362

Users' Manual for Computer Code GCYLT
Gas Lubricated Cylindrical Seals, Laminar and Turbulent

Wilbur Shapiro

This document was published in July 2003 with the restriction Export Administration Regulations (EAR). It was changed to Unclassified/Unlimited July 27, 2005, by authority of the NASA Glenn Research Center, Structures Division.

Per the STI Program Office and Code I at Headquarters, you may modify copies in your possession. The restriction notice on the cover, title page, and Report Documentation Page should be boldly crossed out and the above statement printed clearly above or below it.

Trade names or manufacturers' names are used in this report for identification only. This usage does not constitute an official endorsement, either expressed or implied, by the National Aeronautics and Space Administration.

This work was sponsored by the Low Emissions Alternative Power Project of the Vehicle Systems Program at the NASA Glenn Research Center.

Available from

NASA Center for Aerospace Information
7121 Standard Drive
Hanover, MD 21076

National Technical Information Service
5285 Port Royal Road
Springfield, VA 22100

Available electronically at http://gltrs.grc.nasa.gov

NOMENCLATURE

C_d = inherently compensated orifice coefficient of discharge

C_o = reference clearance (concentric clearance)

d_o = orifice diameter

e = shaft displacement from concentric position

F_f = viscous friction force

FF = dimensionless viscous friction force = $F_f/(p_oC_oR)$

G = turbulent modifier of power loss

G_C = universal gas constant

G_x = turbulent modifier in direction of rotation

G_z = turbulent modifier in direction normal to rotation

h = local film thickness

H = dimensionless film thickness = h/C_o

l = bearing length

L = dimensionless length = l/R

M_c = critical mass

p = pressure

p_o = reference pressure

P = dimensionless pressure = p/p_o

P_{CR} = critical pressure ratio

P_R = orifice downstream pressure

P_S = supply pressure upstream of orifice

q = mass flow

r = orifice hole radius

R = journal radius

R_e = Couette Reynolds number

R_e* = modified Poiseuille Reynolds number

t = time

t_o = reference time $= \dfrac{12\mu R^2}{p_oC_o^2}$

T = dimensionless time = t/t_o

T_a = absolute temperature

T_f = viscous friction torque

TF = dimensionless viscous friction torque = $T_f/(p_oC_oR^2)$

U = journal surface velocity

z = axial direction coordinate

Z = dimensionless axial coordinate = z/R

α = misalignment angle about x-x axis

β = misalignment angle about y-y axis

γ = ratio of specific heats

ε = eccentricity ratio = e/C_o

θ = angular direction (direction of sliding)

θ_p = angular extent of pad

Λ = compressibility parameter = $\dfrac{6\mu\omega R^2}{p_oC_o^2}$

μ = absolute viscosity

ω = rotating speed

TABLE OF CONTENTS

SECTION	PAGE
NOMENCLATURE	iii
LIST OF FIGURES	vi
LIST OF TABLES	viii
1.0 INTRODUCTION	1
2.0 THEOTRETICAL DESCRIPTION AND NUMERICAL METHODS	5
2.1 General Theory	5
2.2 Formation of Equations for Determining Pressure Distribution	5
2.3 The Column Method Solution of Newton-Raphson Equations	13
2.4 Film Thickness Distribution Eccentricity and Misalignment	18
2.5 Power Loss	21
2.6 Computation of Bearing Flows	26
2.7 Frequency-Dependent Spring and Damping Coefficients	27
2.8 Critical Mass and Frequency	30
2.9 Program Organization	32
3.0 INPUT DESCRIPTION	39
3.1 Input Format	39
3.2 Plotting Routines	47
4.0 OUTPUT DESCRIPTION	49
5.0 SAMPLE PROBLEMS	61
5.1 Rayleigh-Step Seal	61
5.2 Sample Problem 2 - Nongrooved Lobe Seal	77
5.3 Sample Problem 3 - Three-Lobe Seal	90
5.4 Sample Problem 4 - T-Shaped Sectored Seal	102
5.5 Sample Problem 5 - Rayleigh-Step, Floating-Ring Seal	119
5.6 Sample Problem 6 - Rayleigh-Step Seal with Eccentricity	133
5.7 Critical Mass - Sample Problem	156
5.8 Comparisons of GCYLT with GCYL	158
6.0 VERIFICATION	165
7.0 OPERATING ENVIRONMENT	175
8.0 ERROR MESSAGES	177
9.0 REFERENCES	179

LIST OF FIGURES

NUMBER		PAGE
1-1	Leakage Path Geometries	2
1-2	Floating Ring Concept with Jointed Segmented Rings	3
1-3	Unwrapped Seal Surface	4
2-1	Flow-Balance Cell and Associated Grid Network	7
2-2	Flow-Balance Across Cell	7
2-3	Couette Turbulence Coefficients	9
2-4	Poiseuille Turbulence Coefficients	10
2-5	Film Thickness Parameters	19
2-6	Preloaded Bearing	20
2-7	Rayleigh-Step	22
2-8	Axial Taper	23
2-9	Viscous Power Loss	24
2-10	Flow Across Circumferential Line	28
2-11	Flow Across Axial Line	28
2-12	Main Program Flow Chart	32
2-13	Flow Chart for Beginning Computations	34
2-14	GCOPTA Flow Chart	35
2-15	Flow Chart for GCOPT2	37
2-16	Flow Chart of GCBRG	38
3-1	Sectored Lobe Seal	42
3-2	Plot Routine Menus	48
5-1	Rayleigh-Step Geometry	62
5-2	Rayleigh-Step Seal Clearance Distribution	75
5-3	Rayleigh-Step Seal Pressure Distribution	76
5-4	Sectored Lobe Seal	78
5-5	Clearance Distribution, Sectored Lobe Seal	88
5-6	Pressure Distribution, Sectored Lobe Seal	89
5-7	Three-Lobe Seal	91
5-8	Clearance Distribution, Three-Lobe Seal	99
5-9	Pressure Distribution, Three-Lobe Seal	100
5-10	Pressure Distribution, Viewing in Axial Direction	100
5-11	T-Shaped Sectored Ring Seal	104
5-12	Pressure Distribution and Force Balance, T Sectored Seal	105
5-13	Clearance Distribution, Sectored Seal	117
5-14	Pressure Distribution, Sectored Seal	118
5-15	Rayleigh-Step, Floating Ring Seal	120
5-16	Developed View of 50-mm Rayleigh-Step Pad	121
5-17	Clearance Distribution, Rayleigh-Step Pad	131
5-18	Pressure Distribution, Rayleigh-Step Pad	132
5-19	Clearance Distribution, Rayleigh-Step Seal with Eccentricity	154

LIST OF FIGURES (continued)

NUMBER		PAGE
5-20	Pressure Distribution, Rayleigh-Step Seal with Eccentricity	155
5-21	Rayleigh-Step Seal, Critical Mass versus Speed	156
5-22	Rayleigh-Step Seal, Critical Frequency versus Speed	157
6-1	Rayleigh-Step, Program Verification	167
6-2	Dimensionless Load Capacity versus Λ	168
6-3	Attitude Angle versus Λ	169

LIST OF TABLES

NUMBER		PAGE
2-1	Disk File Functions	33
5-1	Rayleigh-Step Seal	158
5-2	Three-Pad Sectored Seal	159
5-3	Three-Lobe Seal	160
5-4	Hydrostatic Sector	161
5-5	Rayleigh-Step Seal, Single Pad	162
5-6	Four-Pad Rayleigh-Step Seal	163
6-1	360° Plain Seal Parameters	165
6-2	Laminar Check of GCYLT	166
6-3	Couette Turbulence Comparison	170
6-4	Poiseuille Turbulence Comparison	172
6-5	Recessed Pad Flow Comparisons	173
6-6	Comparative Studies - Discrete Orifices versus Grid Size A	

1.0 INTRODUCTION

GCYLT ("gas lubricated cylindrical turbulent") is used for analyzing seals that can be defined in a cylindrical coordinate reference frame. This turbulent version supplants a previous laminar version, GCYL. The laminar results are identical to the previous code, but GCYLT includes Couette and Poiseuille turbulence when Reynolds numbers dictate the presence of turbulence. Figure 1-1 shows solid ring configurations and Figure 1-2 shows typical sectored ring configurations that the program analyzes. Program capabilities include the following:

- Varying geometries, as indicated on Figures 1-1 and 1-2
- Variable or constant grid representation. Maximum grid size is 30 grid points in the axial direction and 74 grid points in the circumferential direction. Figure 1-3 shows a typical grid network. The circumferential parameter is θ, and the axial parameter is Z. The grid points are identified in the axial direction as I and in the circumferential direction as J. The extent of I is $1 \rightarrow M$, and the extent of J is $1 \rightarrow N$.
- Specified boundary pressures or periodic boundary conditions in the circumferential direction
- Axial symmetry option
- Four degrees of freedom, x and y translations of rotor origin and angular displacements about the x and y axes through the rotor origin
- Determining load as a function of shaft position or determining shaft position to satisfy a given load
- External Pressurization (hydrostatic) of inherently compensated orifices, spot recesses or full recesses
- Choice of English or SI units.

The output of the program includes:

- Clearance distribution
- Pressure distribution
- Leakage along specified flow paths
- Load and load angle
- Righting moments
- Viscous dissipation
- Cross-coupled, frequency-dependent, stiffness and damping coefficients
- Plotting routines for the pressure and clearance distribution
- Critical mass and frequency.

The program was written for a PC environment using OS/2 as an operating system. The relatively large dimensions used would exceed the memory limitations of a DOS environment. The FORTRAN code, however, would be amenable to other systems that use FORTRAN 77, as long as memory is sufficient.

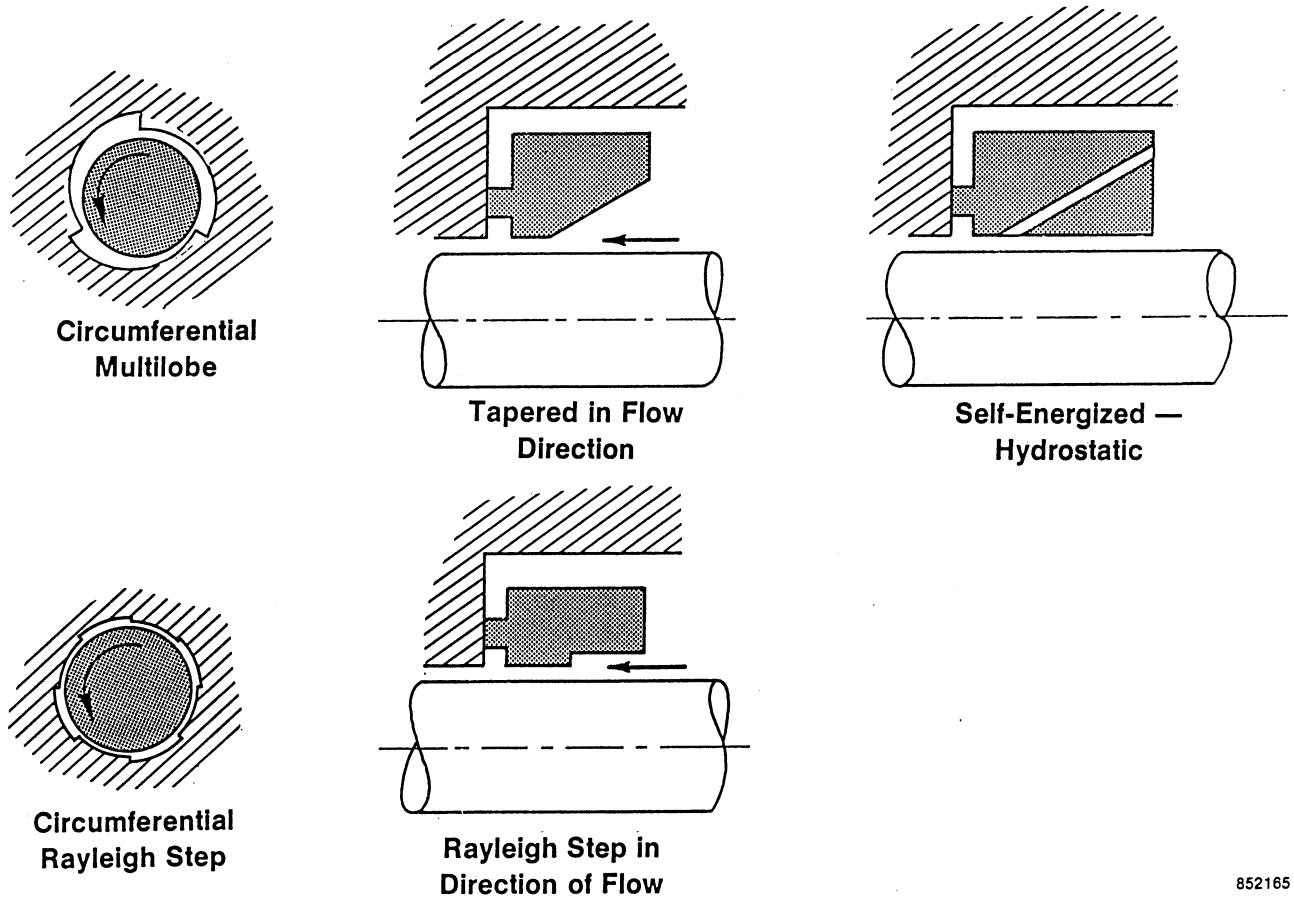

Figure 1-1. Leakage Path Geometries (Floating Ring)

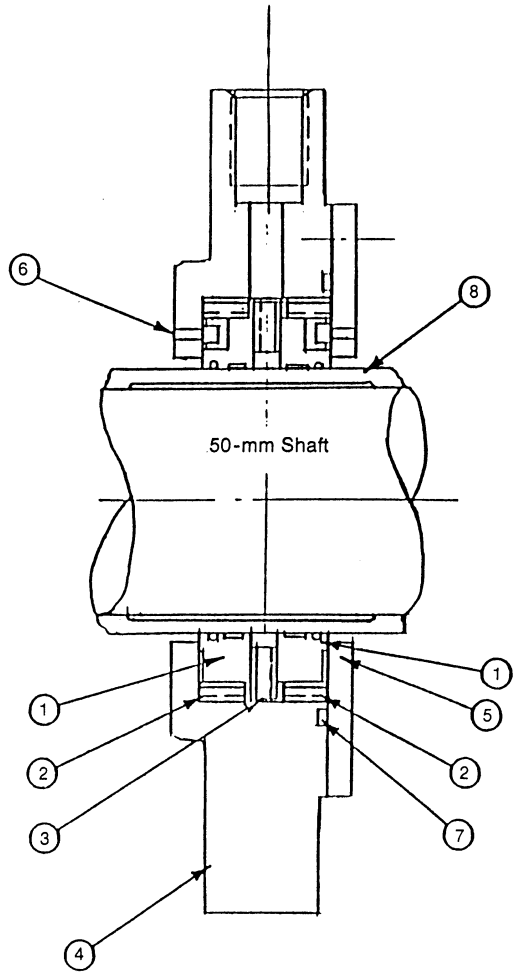

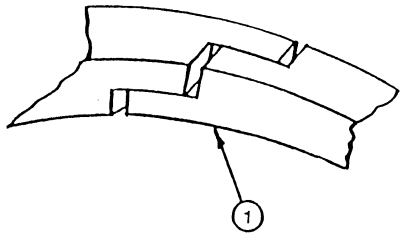

Item	Description	Material
1	Segmented Ring Rayleigh Step	Carbon
2	Spring-Radial	Inconel X-750
3	Spring-Axial	Inconel X-750
4	Housing	Stainless Steel 17-4 PH
5	Cover	Stainless Steel 17-4 PH
6	Stop Pin	Stainless Steel 17-4 PH
7	Seal	Teflon
8	Sleeve	Inconel 718 Hard Chromium Plated

852166

Figure 1-2. Floating Ring Concept with Jointed Segmented Rings

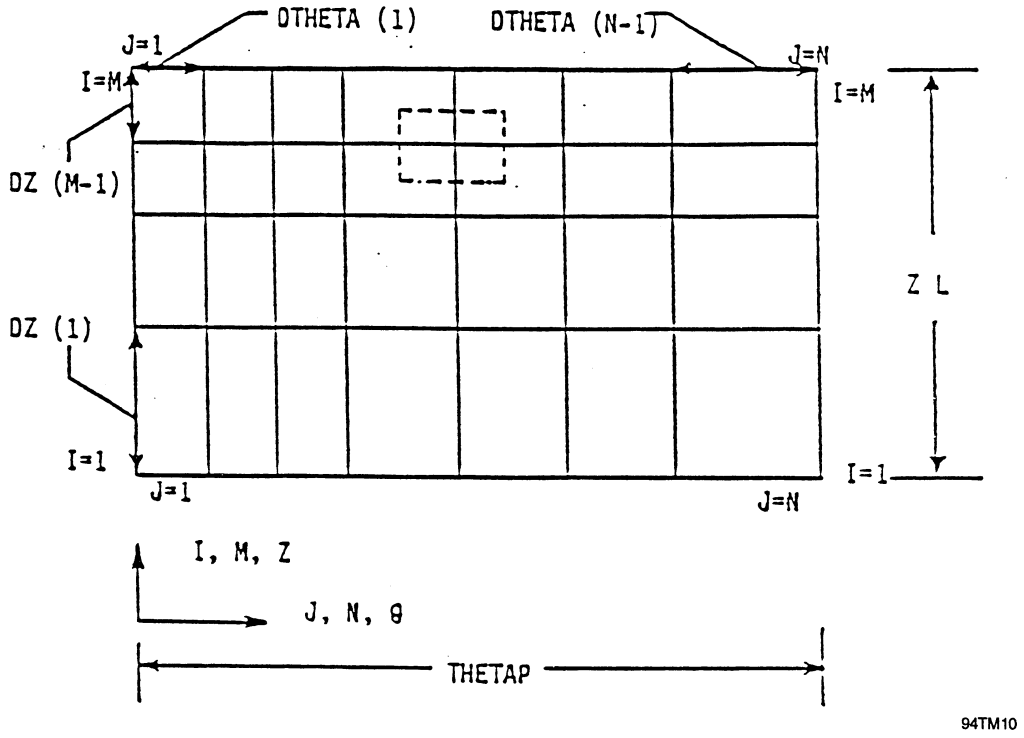

Figure 1-3. Unwrapped Seal Surface

2.0 THEORETICAL DESCRIPTION AND NUMERICAL METHODS

2.1 General Theory

Reynolds equation for turbulent compressible flow for journal bearings is as follows:

$$\frac{1}{R^2}\frac{\partial}{\partial\theta}\left(ph^3G_x\frac{\partial p}{\partial\theta}\right)+\frac{\partial}{\partial z}\left(ph^3G_z\frac{\partial p}{\partial z}\right)=6\mu\omega\frac{\partial(ph)}{\partial\theta}+12\mu\frac{\partial(ph)}{\partial t} \tag{2-1}$$

The equation is made dimensionless with the following definitions. (Upper case variables are dimensionless).

$$Z=z/R,\quad H=h/C_o,\quad T=t/t_o,\quad P=p/p_o,$$

$$\Lambda=\frac{6\mu\omega R^2}{p_oC_o^2},\ t_o=\frac{12\mu R^2}{p_oC_o^2},\ G_x \text{ and } G_z = \textit{turbulence modifiers}$$

Substituting the dimensionless variables into the turbulent Reynolds equation produces a dimensionless equation.

$$\frac{\partial}{\partial\theta}\left(PH^3G_x\frac{\partial P}{\partial\theta}\right)+\frac{\partial}{\partial Z}\left(PH^3G_z\frac{\partial P}{\partial Z}\right)=\Lambda\frac{\partial(PH)}{\partial\theta}+\frac{\partial(PH)}{\partial T} \tag{2-2}$$

For steady-state solutions, the time-dependent term on the right-hand side is eliminated except for the computation of spring and damping coefficients.

In the solution methods subsequently described, the Reynolds equation is not applied directly. The Reynolds equation represents the divergence of the mass flow at any grid point. The more convenient cell method is to conduct a mass balance directly, and not the divergence of the mass flow at each point.

2.2 Formation of Equations for Determining Pressure Distribution

Solving for the pressure distribution is accomplished by a method [1]* that uses a flow balance through a cell volume. The perimeter of the cell extends halfway between the grid point and its four neighboring points. A typical cell is shown by the dashed lines on Figure 2-1. The principal grid point is at Row i (length direction) and Column j (circumferential direction). For convenience of programming, the grid points are numbered for each cell sequentially from 1 to 9, with grid point 5 being the principal point. The corners of the cell boundaries are also numbered from 1 to 4.

---

*Numbers in brackets indicate references located in Section 9.0.

Figure 2-2 shows the flow balance through the cell. There are eight flows across the cell boundaries, and there can also be a source (or sink) flow into or out of the cell control volume. The reason eight flows are used in lieu of four is that it permits discontinuous clearance boundaries at grid lines (such as Rayleigh steps) without taking derivatives across a discontinuous boundary.

The net flow through a cell can be expressed as:

$$Q_{12}^{+}\frac{\Delta Z_i}{2} + Q_{12}^{-}\frac{\Delta Z_{i-1}}{2} + Q_{14}^{+}\frac{\Delta\theta_j}{2} + Q_{14}^{-}\frac{\Delta\theta_{j-1}}{2}$$
$$-Q_{34}^{+}\frac{\Delta Z_i}{2} - Q_{34}^{-}\frac{\Delta Z_{i-1}}{2} - Q_{23}^{+}\frac{\Delta\theta_j}{2} - Q_{23}^{-}\frac{\Delta\theta_{j-1}}{2} = Q_{in} \qquad \textbf{(2-3)}$$

Q_{12}^{+} means the mass flow per unit length across the plus side of cell boundary 1-2, etc.

The Q's are dimensionless mass flows per unit length, except for Q_{in} which is a dimensionless source inlet flow. (Primed values of P are absolute pressures; unprimed values are gage pressures).

In the θ direction:

$$Q = -\acute{P}H^3\frac{\partial P}{\partial\theta}G_x\frac{\Delta Z}{2} + \Lambda\acute{P}H\frac{\Delta Z}{2} \qquad \textbf{(2-4)}$$

In the length or Z direction:

$$Q = -\acute{P}H^3\frac{\partial P}{\partial Z}G_z\frac{\Delta\theta}{2} \qquad \textbf{(2-5)}$$

where Q is defined as

$$Q = \frac{12\mu G_c T_a\, q}{p_o^2 C_o^3} \qquad \textbf{(2-6)}$$

An optional flow can enter the cell from an external source, which can be treated as an inherently compensated orifice, or a conventional orifice restriction. Inherent compensation presumes the orifice area is the surface area of a cylinder circumvented by the hole size and length equal to the clearance under the inlet hole. The conventional orifice area is the area of the hole. The conventional orifice generally discharges into a recess that allows the flow velocity to dissipate into a region of constant pressure. Two types of recesses are permitted; a spot recess, which is treated as a source at one grid point, or a recess of finite length in the axial and circumferential directions, which is fed by an inlet orifice.

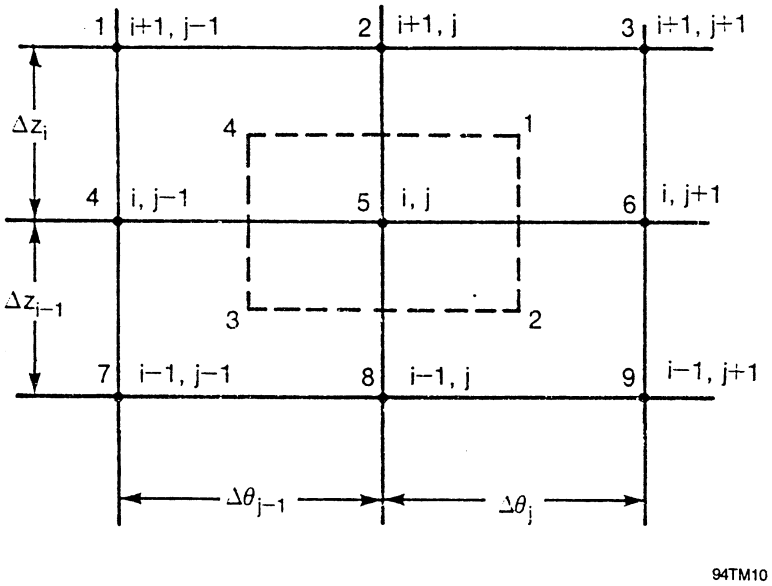

Figure 2-1. Flow-Balance Cell and Associated Grid Network

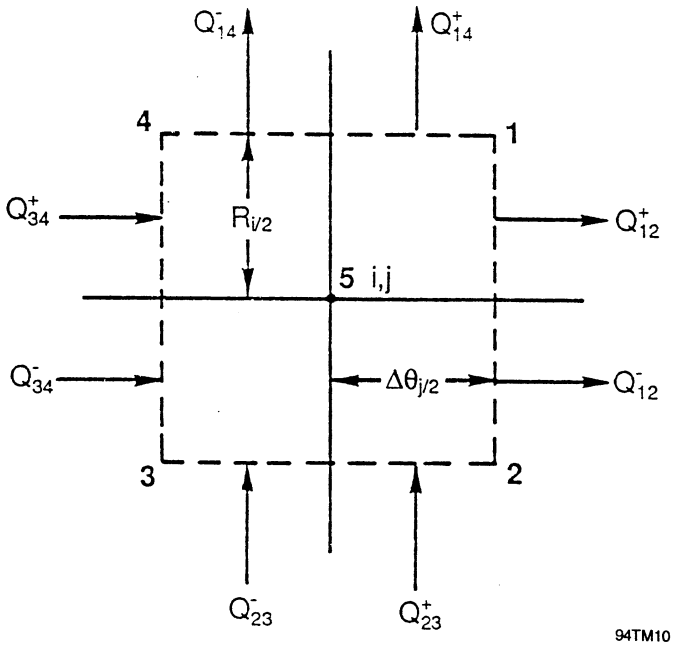

Figure 2-2. Flow-Balance Across Cell

Pressures are taken as the average pressure across the boundary. For example:

$$P_{12} = \frac{P_{i,j} + P_{i,j+1}}{2} \tag{2-7}$$

and

$$\frac{\partial P}{\partial \theta}\Big|_{12} = \frac{P_{i,j+1} - P_{i,j}}{\Delta\theta_j} \tag{2-8}$$

etc.

The turbulent G factors are dependent upon the Couette and Poiseuille Reynolds numbers which are at each grid point[2].

The Couette Reynolds number is

$$Re = \frac{CR\omega p_o}{\mu G_c T_a} P_c H_c \tag{2-9}$$

where the subscript c refers to the cell corner point (e.g., for Q^{+}_{12}, $P_c = P_1$). The Poiseuille Reynolds number is defined as:

$$R_e^* = R_{e0}^* |\nabla P| H_c^3 P_c$$

$$\text{where } R_{e0}^* = \frac{C^3 p_o^2}{\mu^2 R G_c T_a} \tag{2-10}$$

$$|\nabla P| = \left[\left(\frac{\partial P}{\partial \theta}\right)^2 + \left(\frac{\partial P}{\partial Z}\right)^2\right]^{1/2}$$

The value of P_c is the average of the four surrounding grid points, i.e.,

$$P_c = \frac{P_{i+i,j} + P_{i+1,j+1} + P_{ij} + P_{i,j+1}}{4}$$

The variation of the G factors with Reynolds numbers are shown on Figures 2-3 and 2-4. Once the Reynolds numbers have been computed at the cell corner points, the appropriate G coefficients are obtained from curve fitting routines.

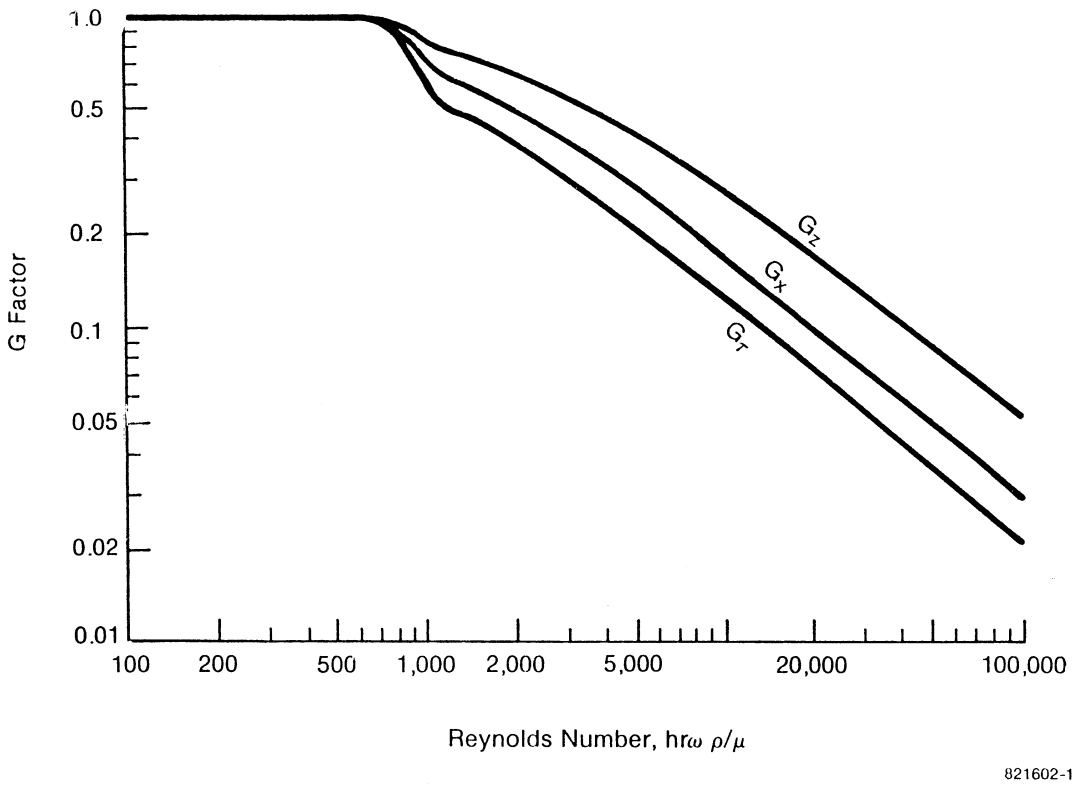

Figure 2-3. Couette Turbulence Coefficients

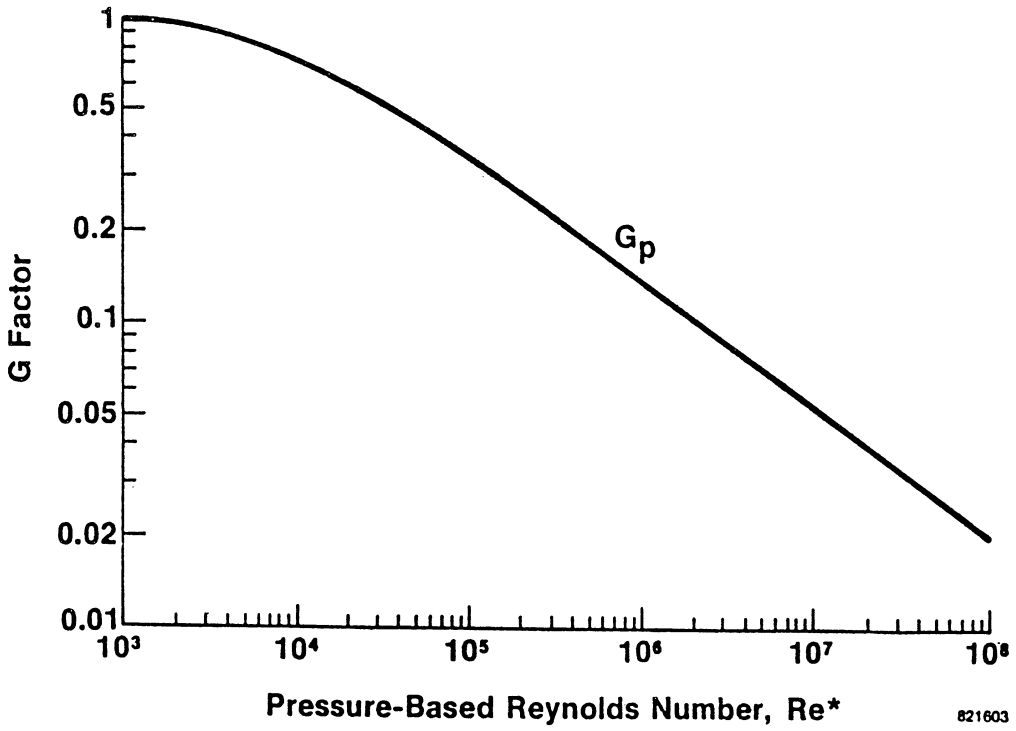

Figure 2-4. Poiseuille Turbulence Coefficients

The final values utilized are:

$$G_x = Min\left[G_x(R_e),\ G_p(R_e^*)\right] \tag{2-11}$$

$$G_z = Min\left[G_z(R_e),\ G_p(R_e^*)\right] \tag{2-12}$$

where G_x (R_e) and G_z (R_e) are Couette, and G_p are Poiseuille factors. This procedure selects the dominant turbulence factor for each of the eight cell flows.

By substituting the pressures and pressure derivatives (Equations 2-7 and 2-8) into the mass flow balance equations (2-3 and 2-4), an equation is derived that is a function of the nine pressures, P_1 through P_9, and the clearances taken at the cell corner points, H_1 -- H_4. Each cell corner point film thickness is computed in the clearance routine by appropriate values of Z and θ and is designated as HC_i, i = 1, 4. For example, HC_1 is the clearance at the cell corner point 1.

An optional flow can enter the cell from an external source, which is treated as an inherently compensated orifice or the usual hole size orifice restriction. Point sources pose numerical instability problems, which are circumvented by applying fine grids surrounding the source points. Flow through the orifice is given as:

$$Q_{in} = OFCxAOx\acute{P}_S \left\{ \left(\frac{\acute{P}_R}{\acute{P}_S}\right)^{2/\gamma} \left[1 - \left(\frac{\acute{P}_R}{\acute{P}_S}\right)^{\frac{\gamma-1}{\gamma}}\right] \right\}^{1/2} \tag{2-13}$$

where

$$OFC = \frac{12\mu C_d}{p_o C_o^3} \sqrt{\frac{2\gamma G_c T_a}{\gamma - 1}} \tag{2-14}$$

$$A_o = \begin{cases} \pi do H_5 C_o & \textit{for Inherent Compensation} \\ \dfrac{\pi do^2}{4} & \textit{for Orifice Compensation} \\ & (\textit{spot recess or full recess}) \end{cases} \tag{2-15}$$

If

$$\left(\frac{\acute{P}_R}{\acute{P}_S}\right) \leq P_{CR} \quad then \left(\frac{\acute{P}_R}{\acute{P}_S}\right) = P_{CR} \tag{2-16}$$

$$where\ P_{CR} = \left[\frac{2.0}{(\gamma+1)}\right]\left(\frac{\gamma}{\gamma-1}\right) \tag{2-17}$$

$$Also,\ if\ \frac{\acute{P}_R}{\acute{P}_S} > 1.0,\ \frac{\acute{P}_R}{\acute{P}_S} = \frac{1}{\acute{P}_R/\acute{P}_S}\ and\ \acute{P}_S = \acute{P}_R \tag{2-18}$$

This condition implies backflow through the orifice.

The primed values indicate absolute pressure (i.e., $\acute{P}_R = P_R+1$).

Thus, a system of numerical equations can be derived as a function of nine pressures. There is an equation for every grid point.

$$f\ (P_1,\ P_2,\ ....\ P_9)\ i,j\ = 0 \tag{2-19}$$

The system is nonlinear since it is dependent upon multiples of P and its derivatives.

The solution process starts by assuming a pressure distribution, and using Newton-Raphson iteration until the functions f converge to zero within a prespecified truncation error. In equation form, the iteration process is:

$$f_{i,j}^{(old)} + \sum_{k=1}^{9} \partial\frac{f_{i,j}^{(old)}}{\partial P_K}\left(P_K^{(new)} - P_K^{(old)}\right) = 0 \tag{2-20}$$

where the partial derivatives are explicitly determined, e.g.,

$$\frac{\partial f_{i,j}}{\partial P_K} = \frac{f(P_1, P_2,\ ...\ P_{K+\varepsilon/2}\ ...\ P_9)_{i,j} - f(P_1, P_2,\ ...\ P_{K-\varepsilon/2},\ ...\ P_9)_{i,j}}{\varepsilon} \tag{2-21}$$

The actual convergence is not on f, but on $P_K^{(new)} - P_K^{(old)}$, for when the difference vanishes, the condition that f = 0 is satisfied.

The subroutine, QSUM, computes the mass flow residues at each cell from Equation 2-3. The subroutine, PD, computes the partial derivatives of the flow residue. It calls on QSUM with pressures sequentially incremented to establish partial derivatives.

2.3 The Column Method Solution of Newton-Raphson Equations

The column method[3] is used to solve the new pressures in the set of M x N equations defined by Equation 2-20. The advantage of the column matrix method is that its inversions are M x M rather than M x N so that its use saves computational time.

The linearized N-R equations may be written in the form:

$$C_j P_j + E_j P_{j-1} + D_j P_{j+1} = R_j \tag{2-22}$$

For each value of j, P_j is a vector containing the jth column of new pressures, R_j is the right-hand side column vector and C_j, E_j and D_j are in general tri-diagonal matrices.

Case 1 - Pressure Prescribed at Start and End of Pads

Equations of form 2-22 are written at all points in the grid corresponding to i = 1, 2, →M and j = 2, 3, →N-1 with boundary column vectors P_1 and P_N prescribed. Look for a solution in the form:

$$P_{j-1} = A_j P_j + B_j \tag{2-23}$$

Where A_j is an M x M matrix and B_j is a vector. Use Equation 2-23 to eliminate P_{j-1} appearing in Equation 2-22.

$$(C_j + E_j A_j) P_j + E_j B_j + D_j P_{j+1} = R_j \tag{2-24}$$

Solve Equation 2-24 for P_j to obtain:

$$P_j = -I_j D_j P_{j+1} + I_j(R_j - E_j B_j) \tag{2-25}$$

Where $I_j = (C_j + E_j A_j)^{-1}$ (M x M matrix)

Set j = j+1 in Equation 2-23 to obtain

$$P_j = A_{j+1} P_{j+1} + B_{j+1} \tag{2-26}$$

Compare coefficients in Equations 2-25 and 2-26.

$$A_{j+1} = -I_j P_j \,,\; B_{j+1} = I_j (R_j - E_j B_j) \tag{2-27}$$

Set $A_2 = 0$, $B_2 = P_1$.

Use Equation 2-27 to compute A_3, A_4, --, A_N and B_3, B_4 -- B_N.

Since P_N is given and all A_j and B_j are computed, we may use Equation 2-23 to compute P_{N-1}, P_{N-2}, P_{N-3}, ---, P_2.

Review of General Procedure for Nonperiodic Boundaries

1) Set $A_2 = 0$

$B_2 = P_1$

2) Compute A_{j+1}, B_{j+1}

$A_{j+1} = -I_j D_j$

$B_{j+1} = I_j (R_j - E_j B_j)$

$j \rightarrow 2, N\text{-}1$

where $I_j = (C_j + E_j A_j)^{-1}$

3) Compute P_j

$P_{j-1} = A_j P_j + B_j$

$j \rightarrow N, 2$

Case 2 - Column Method for Periodic Boundaries

P_j , B_j , R_j , Z_j are vectors. $\acute{N} = N - 1$

For periodic boundaries, the condition is that $P_1 = P_N$. At the boundary, j = 1, the general equation is:

$$C_1 P_1 + E_1 P_{\acute{N}} + D_1 P_2 = R_1 \tag{2-28}$$

At column $\acute{N}$, the equation becomes

$$C_{N'} P_{N'} + E_{N'} P_{N'-1} + D_N P_1 = R_{N'} \tag{2-29}$$

To satisfy the boundary conditions, a solution is assumed of the form:

$$P_{j-1} = A_j P_j + B_j + F_j P_{N'} \tag{2-30}$$

$$A_1 = 0,\ B_1 = 0,\ F_1 = \delta \ \textit{(Kronecker delta matrix)} \tag{2-31}$$

Returning to the general equation:

$$C_j P_j + E_j P_{j-1} + D_j P_{j+1} = R_j \tag{2-32}$$

Substituting for P_{j-1} from Equation 2-30, the following results:

$$(C_j + E_j A_j) P_j + E_j B_j + E_j F_j P_{N'} + D_j P_{j+1} = R_j \tag{2-33}$$

$$I_j = (C_j + E_j A_j)^{-1} \tag{2-34}$$

Then,

$$P_j = -I_j D_j P_{j+1} + I_j (R_j - E_j B_j) - I_j E_j F_j P_{N'} \tag{2-35}$$

From Equation 2-30:

$$P_j = A_{j+1} P_{j+1} + B_{j+1} + F_{j+1} P_{N'} \tag{2-36}$$

Comparing Equations 2-35 and 2-36:

$$A_{j+1} = -I_j D_j \; B_{j+1} = I_j(R_j - E_j B_j), \; F_{j+1} = -I_j E_j F_j \; j=1, 2, --, N-1 \tag{2-37}$$

For $P_N = P_1$, we obtain from Equation 2-30:

$$P_{N'} = A_{N'+1} P_1 + B_{N'+1} + F_{N'+1} P_{N'} \tag{2-38}$$

After rearranging:

$$P_{N'} = (\delta - F_{N'+1})^{-1} (A_{N'+1} P_1 + B_{N'+1}) \tag{2-39}$$

or

$$P_{N'} = Y_{N'} P_1 + Z_{N'} \tag{2-40}$$

where

$$Y_{N'} = (\delta - F_{N'+1})^{-1} A_{N'+1}, \; Z_{N'} = (\delta - F_{N'+1})^{-1} B_{N'+1} \tag{2-41}$$

Substituting Equation 2-40 into 2-30 we obtain:

$$\begin{aligned} P_{N'-1} &= A_{N'} (Y_{N'} P_1 + Z_{N'}) + B_{N'} + F_{N'} (Y_{N'} P_1 + Z_{N'}) \\ &= (A_{N'} Y_{N'} + F_{N'} Y_{N'}) P_1 + A_{N'} Z_{N'} + B_{N'} + F_{N'} Z_{N'} \\ &= Y_{N'-1} P_1 + Z_{N'-1} \end{aligned} \tag{2-42}$$

where

$$Y_{N'-1} = A_{N'} Y_{N'} + F_{N'} Y_{N'} \ , \ Z_{N'-1} = A_{N'} Z_{N'} + B_{N'} + F_{N'} Z_{N'} \tag{2-43}$$

Similarly,

$$\begin{aligned} P_{N'-2} &= A_{N'-1} (Y_{N'-1} P_1 + Z_{N'-1}) + B_{N'-1} + F_{N'-1} (Y_{N'} P_1 + Z_{N'}) \\ &= (A_{N'-1} Y_{N'-1} + F_{N'-1} Y_{N'}) P_1 + A_{N'-1} Z_{N'-1} + B_{N'-1} + F_{N'-1} Z_{N'} \end{aligned} \tag{2-44}$$

$$= Y_{N'-2} P_1 + Z_{N'-2} \tag{2-45}$$

$$\begin{aligned} Y_{j-1} &= A_j Y_j + F_j Y_{N'} \\ Z_{j-1} &= A_j Z_j + B_j + F_j Z_{N'} \end{aligned} \tag{2-46}$$

Therefore, in general:

$$P_{j-1} = Y_{j-1} P_1 + Z_{j-1} \ or \ P_j = Y_j P_1 + Z_j \tag{2-47}$$

$$P_1 = (\delta - Y_1)^{-1} Z_1 \tag{2-48}$$

Review of General Procedure for Joined or Periodic Boundaries

1) Compute A_{j+1}, B_{j+1}, F_{j+1}

$A_{j+1} = -I_j D_j$

$B_{j+1} = I_j (R_j - E_j B_j)$

$j=1, N-1$

$F_{j+1} = -I_j E_j F_j$

$A_1 = 0$

$I_j = (C_j + E_j A_j)^{-1}$

$B_1 = 0$

$F_1 = \delta$

2) *Compute* Y_N', Z_N'

$$Y_N' = (\delta - F_N)^{-1} A_N$$
$$Z_N' = (\delta - F_N)^{-1} B_N$$

3) *Compute*

$$Y_{j-1} = A_j Y_j + F_j Y_N'$$
$$j = N \rightarrow 2$$
$$Z_{j-1} = A_j Z_j + B_j + F_j Z_N'$$

4) *Compute* $P_1 = (\delta - Y_1)^{-1} Z_1$

5) *Compute* $P_j = Y_j P_1 + Z_j$
$j = 2 \rightarrow N$

The coefficient matrices C_j, E_j and D_j, and the right-hand side vector R_j, are easily formulated. C_j contains all the coefficients multiplied by P_j. By examining Equation 2-20, it is seen that for any row i and column j that values of C are:

$$C_{i,i-1,j} = \frac{\partial f_5}{\partial P_8}$$
$$C_{i,i,j} = \frac{\partial f_5}{\partial P_5} \qquad \textbf{(2-49)}$$
$$C_{i,i+1,j} = \frac{\partial f_5}{\partial P_2}$$

Similarly, the coefficient matrix E_j contains the elements:

$$E_{i,i,j} = \frac{\partial f_5}{\partial P_4}, \; E_{i,i+1,j} = \frac{\partial f_5}{\partial P_1}, \; E_{i,i-1,j} = \frac{\partial f_5}{\partial P_7} \qquad \textbf{(2-50)}$$

and

$$D_{i,i,j} = \frac{\partial f_5}{\partial P_6}, \; D_{i,i+1,j} = \frac{\partial f_5}{\partial P_3}, \; D_{i,i-1,j} = \frac{\partial f_5}{\partial P_9} \qquad \textbf{(2-51)}$$

R_j contains all elements not multiplied by the pressure

$$R_j = -f_{ij}^{(old)} + \sum_{k=1}^{9} \frac{\partial f_{ij}}{\partial P_K} P_K^{(old)} \qquad \textbf{(2-52)}$$

Separate subroutines are used depending upon the pressure boundary conditions. The subroutine COLP implements the column method for prescribed boundary conditions while COLJ does it for periodic or joined boundaries. The subroutine COEFC forms the C matrix coefficients while COEFF forms the coefficient matrices and right-hand side vectors D, E, R, respectively.

2.4 Film Thickness Distribution (see Figure 2-5) Eccentricity and Misalignment

In vector format, the clearance due to eccentricity and misalignment at any angle θ and at distance z' from the mid-plane is:

$$\bar{h} = \left(C_o\bar{e}_r - e_x\hat{i} - e_y\hat{j} - \alpha\hat{i} \times z'\hat{k} - \beta\hat{j} \times z'\hat{k}\right) \cdot \hat{e}_r \tag{2-53}$$

$$\begin{aligned} h &= C_o - e_x\cos\theta - e_y\sin\theta + \alpha z' \sin\theta - \beta z'\cos\theta \\ &= C_o - (e_x + \beta z')\cos\theta - (e_y - \alpha z')\sin\theta \end{aligned} \tag{2-54}$$

Using dimensionless variables, Equation (2-54) becomes:

$$\begin{aligned} H = 1 &- \left(\varepsilon_x + \beta\frac{(Z - L/2)R}{C_o}\right)\cos\theta \\ &- \left(\varepsilon_y - \alpha\frac{(Z - L/2)R}{C_o}\right)\sin\theta \end{aligned} \tag{2-55}$$

which is set equal to

$$H = 1 - (\varepsilon_x + \varepsilon_\beta)\cos\theta - (\varepsilon_y + \varepsilon_\alpha)\sin\theta \tag{2-56}$$

where

$$\begin{aligned} \varepsilon_\beta &= \beta\,\frac{(Z - L/2)R}{C_o} \\ \varepsilon_\alpha &= \alpha\,\frac{(Z - L/2)R}{C_o} \end{aligned} \tag{2-57}$$

Preloaded Bearings

Preloaded bearings (see Figure 2-6) can be modeled by adding an additional eccentricity in the x and y directions.

$$\begin{aligned} \varepsilon_{PR}^{x} &= \varepsilon_{PR}\cos\theta_p \\ \varepsilon_{PR}^{y} &= \varepsilon_{PR}\sin\theta_p \end{aligned} \tag{2-58}$$

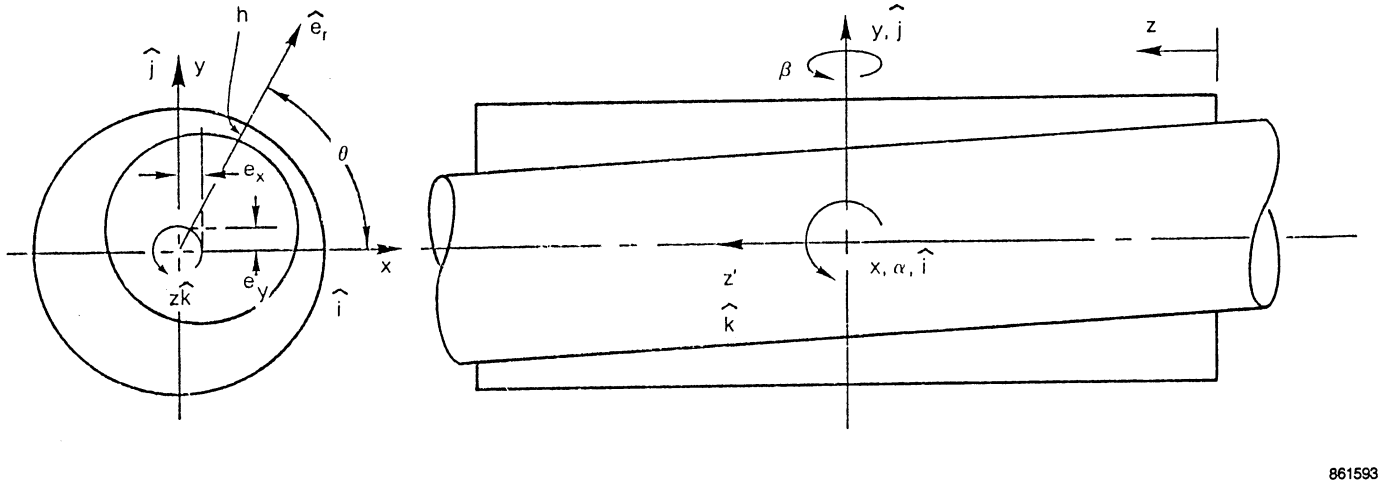

Figure 2-5. Film Thickness Parameters

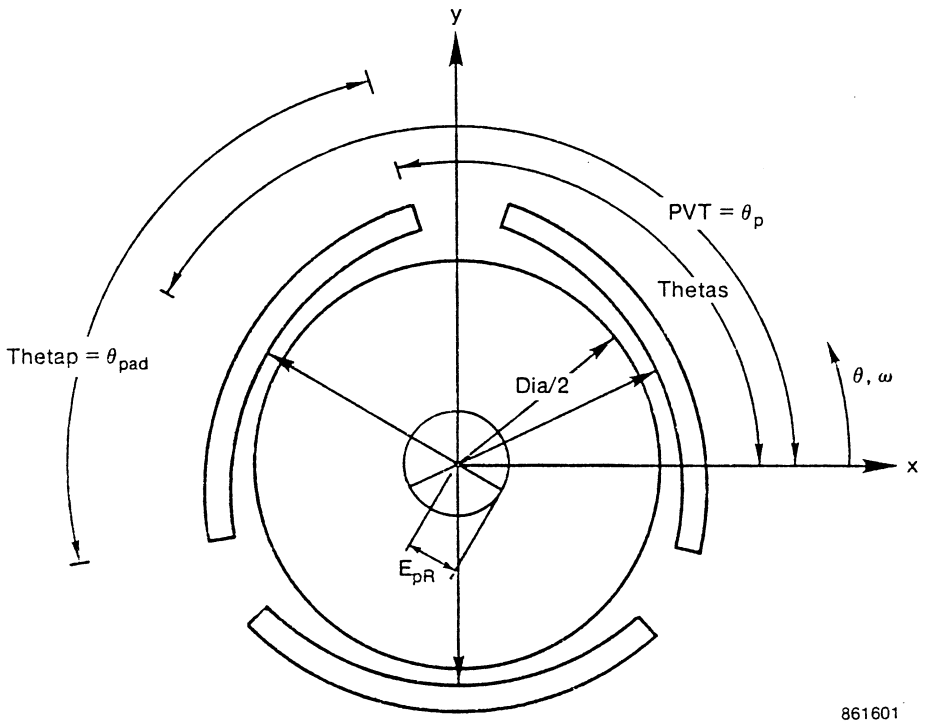

Keyword	Variable	Description
START	THETAS	Pad Start Angle
PADANGLE	THETAP	Pad Angle
PIVOT	PVT	Pivot Angle
PRELOAD	EPR	Offset/Clearance

Figure 2-6. Preloaded Bearing

where

ε_{PR}^{x} = x eccentricity due to preload

ε_{PR}^{y} = y eccentricity due to preload

θ_p = preload angle.

Rayleigh Step

The grid network for the Rayleigh step is shown on Figure 2-7. The boundaries of the step are defined by the lower left and upper right corners of the depressed region. Interior grid points include the step height in the clearance distribution.

Axial Taper

An axial taper is indicated as Figure 2-8. If $Z \geq Z_t$ then

$$H = H + \delta(Z - Z_t) \tag{2-59}$$

2.5 Power Loss (Torque)

Power loss is obtained by integrating the viscous shear forces across the film. From Figure 2-9, a force balance on an element produces:

$$\frac{\partial p}{\partial x} = \frac{\partial \tau}{\partial z}, \tag{2-60}$$

but

$$\tau = \mu \frac{\partial U}{\partial z} \tag{2-61}$$

Therefore,

$$\frac{\partial p}{\partial x} = \frac{\mu}{G\tau} \frac{\partial U^2}{\partial z^2} \tag{2-62}$$

where G_τ is the turbulence shear modifier. See Figure 2-3.

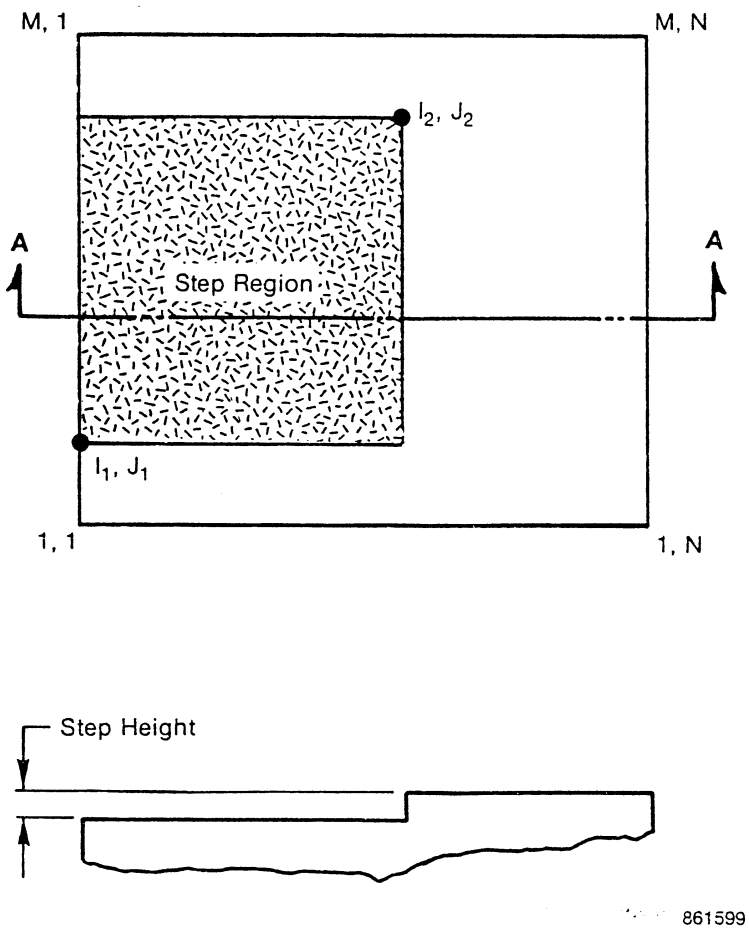

Figure 2-7. Rayleigh-Step

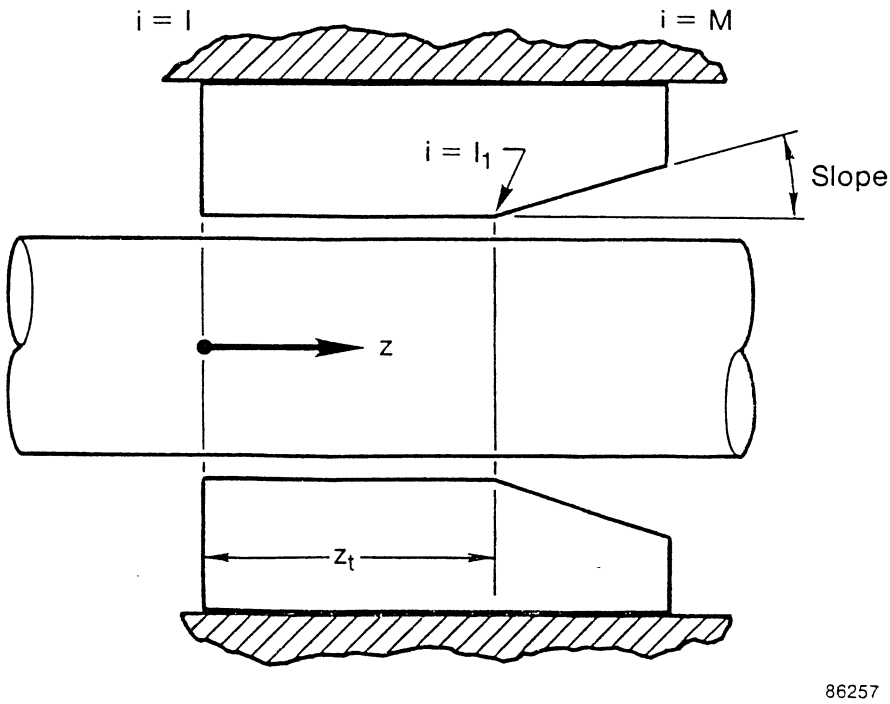

Figure 2-8. Axial Taper

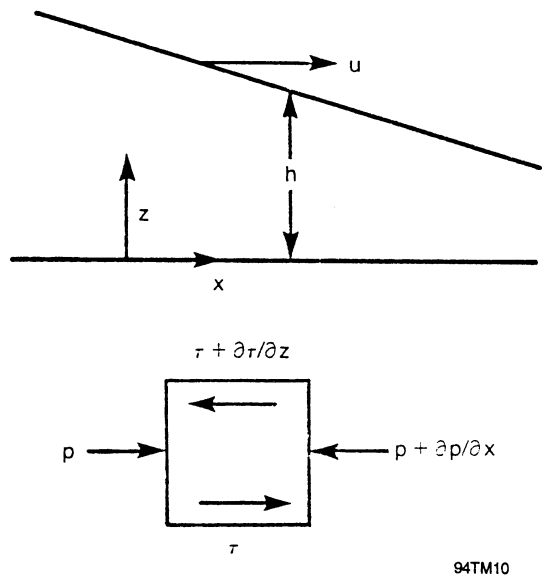

Figure 2-9. Viscous Power Loss

Integrating,

$$\frac{\partial U}{\partial z} = \frac{G_\tau}{\mu}\frac{\partial p}{\partial x} z + C_1 \tag{2-63}$$

$$U = \frac{G_\tau}{\mu}\frac{\partial p}{\partial x}\frac{z^2}{2} + C_1 z + C_2 \tag{2-64}$$

The boundary conditions are:

$$\begin{gathered} U = 0 \quad z = 0 \therefore C_2 = 0 \\ U = U \quad when\ z = h \end{gathered} \tag{2-65}$$

Substituting:

$$U = \frac{G_\tau}{\mu}\frac{\partial p}{\partial x}\frac{h^2}{2} + C_1 h \tag{2-66}$$

Therefore,

$$C_1 = \frac{U}{h} - \frac{G}{\mu}\frac{\partial p}{\partial x}\frac{h}{2} \tag{2-67}$$

and

$$U = \frac{G}{\mu}\frac{\partial p}{\partial x}\left[\frac{z^2}{2} - \frac{h}{2}z\right] + \frac{U}{h}z \tag{2-68}$$

$$\frac{\partial U}{\partial z} = \frac{1}{\mu}\frac{\partial p}{\partial x}\left[z - \frac{h}{2}\right] + \frac{U}{h} \tag{2-69}$$

$$\tau = \frac{\mu}{G}\frac{\partial u}{\partial z} = \frac{\partial p}{\partial x}\left[z - \frac{h}{2}\right] + \frac{U}{h}\frac{\mu}{G} \tag{2-70}$$

$$\tau\ (at\ z{=}h) = \frac{\partial p}{\partial x}\frac{h}{2} + \frac{\mu}{G}\frac{U}{h} \tag{2-71}$$

$$\begin{aligned} F_f &= friction\ force = \iint \tau dA \\ &= \iint \left[\frac{\partial P}{R\partial\theta}\frac{h}{2} + \frac{\mu}{G}\frac{R\omega}{h}\right] Rd\theta dZ \\ &= \iint \left[\frac{p_o C_o}{2R} H \frac{\partial P}{\partial\theta} + \frac{\mu}{C_o}\frac{R\omega}{HG}\right] R^2 d\theta dZ \\ &= \iint \left[p_o C_o R \frac{h}{2}\frac{\partial P}{\partial\theta} + \frac{\mu}{G}\frac{\omega R^3}{C_o H}\right] d\theta dZ \end{aligned} \tag{2-72}$$

$$\begin{aligned} FF &= \iint \left[p_o C_o \frac{H}{2}\frac{\partial P}{\partial\theta} + \frac{\Lambda}{G}\frac{C_o p_o}{6} R \frac{1}{H}\right] d\theta dZ \\ FF &= \iint \left[\frac{H}{2}\frac{\partial P}{\partial\theta} + \frac{\Lambda}{G6H}\right] d\theta dZ \end{aligned} \tag{2-73}$$

$$TF = \iint \left[\frac{H}{2} \frac{\partial P}{\partial \theta} + \frac{\Lambda}{G6H} \right] d\theta dZ \tag{2-74}$$

G, the turbulence modifier for friction, is the minimum of the Couette and Poiseuille values. The Couette and Poiseuille Reynolds numbers are computed as before (see Section 2-2). For the Couette number, G_τ, as shown on Figure 2-3, is obtained. For the Poiseuille flow, G_p, as shown on Figure 2-4, is obtained. The value of G is the minimum of G_τ and G_p.

2.6 Computation of Bearing Flows

The program computes the flow across specified axial and circumferential grid lines. A total of four grid lines can be prespecified. The subroutine FLOCIR determines flow across a circumferential line and the subroutine FLOAXL computes the flow across an axial grid line.

Circumferential Flow Line (see Figure 2-10)

There are three types of points to consider. A point on a grid boundary J = 1 or J = N, and an interior point. Also, a flow line on I = M requires special consideration. For each point, a flow balance is accomplished through the cell surrounding the point as depicted on Figure 2-10. Consider an interior grid point on an interior grid line (I ≠ M).

$$Q_C\ (I, J) = Q_{14}^- + Q_{14}^+ + Q_{12}^+ - Q_{34}^+ \tag{2-75}$$

where

$$Q^+_{12} = \left(- \left(H_1^3\ G_x \frac{\partial P}{\partial \theta} \right)_{12} P_{12} + \Lambda\ H_1\ P_{12} \right) DZ_i/2 \tag{2-76}$$

$$\frac{\partial p}{\partial \theta}\Big|_{12} = \left(P_{i,j+1} - P_{i,j}\right) / \Delta\theta_j \tag{2-77}$$

$$P_{12} = \left(P_{i,j} + P_{i,j+1}\right)/2.0 \tag{2-78}$$

The remaining flow components are similarly computed and Q_C (I, J) determined.

At J = 1, $\partial P/\partial\theta \mid_{34}$ is computed by forward difference and is equal to $\partial P/\partial\theta \mid_{12}$.

The pressure $P_{34}+ = P_{12}+$.

The clearance H_4 is not a regular grid point clearance and thus is not included in the grid clearance array. H_4 is computed as the average of $H_{i,j}$ and $H_{i+i,j}$.

The grid line mass flows are accumulated to obtain the total flow across the grid line.

Similar procedures are used for computing flows across axial lines (see Figure 2-11).

2.7 Frequency-Dependent Spring and Damping Coefficients

Discretization has been carried out with the use of the cell method [1], which involves a flow balance about each grid point.

$$\int \bar{\nabla} \cdot \bar{Q} dA = \oint \bar{Q} \cdot \bar{n} dS = -\frac{\partial}{\partial T} \int (1 + P)\ H dA \tag{2-79}$$

where Q = the mass flow vector per unit length.

The equality of the first two terms comes from the divergence theorem.

In numerical format, the right-hand side becomes:

$$-\frac{\partial}{\partial T}\left[(1 + P_{ij})\ H_{ij} A_{ij}\right] \tag{2-80}$$

where,

$$A_{ij} = \frac{1}{4}(\Delta\theta_j + \Delta\theta_{j-1})\ (\Delta Z_i + \Delta Z_{i-1}) \tag{2-81}$$

Generally, a small perturbation analysis is used for determining frequency-dependent spring and damping coefficients and solving the complete equation (2-79). A small perturbation analysis, however, is generally limited to concentric operation and produces complex expressions for the perturbation coefficients. Identical results can be achieved by direct numerical perturbation of the difference equations used in the column matrix solution approach. This method, which is described below, avoids algebraic error in determining the perturbation coefficients and may be used in complex situations where analytical determination of the perturbation coefficients is not feasible.

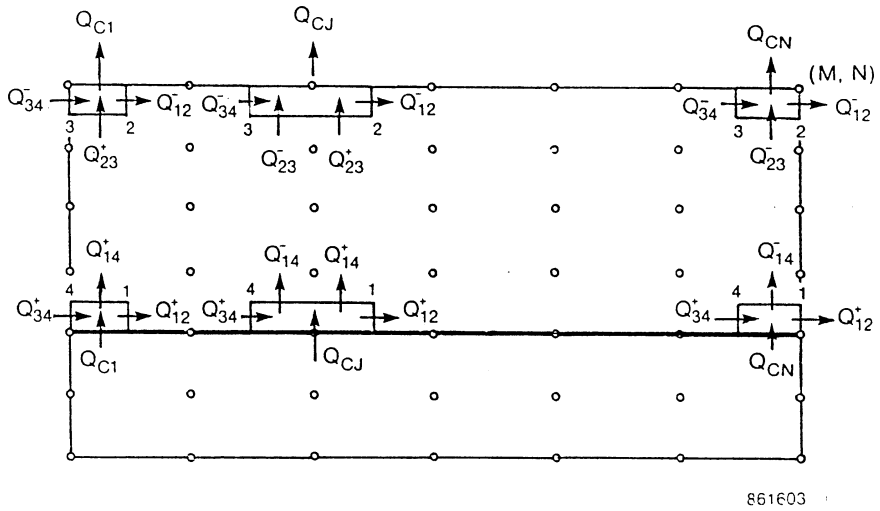

Figure 2-10. Flow Across Circumferential Line

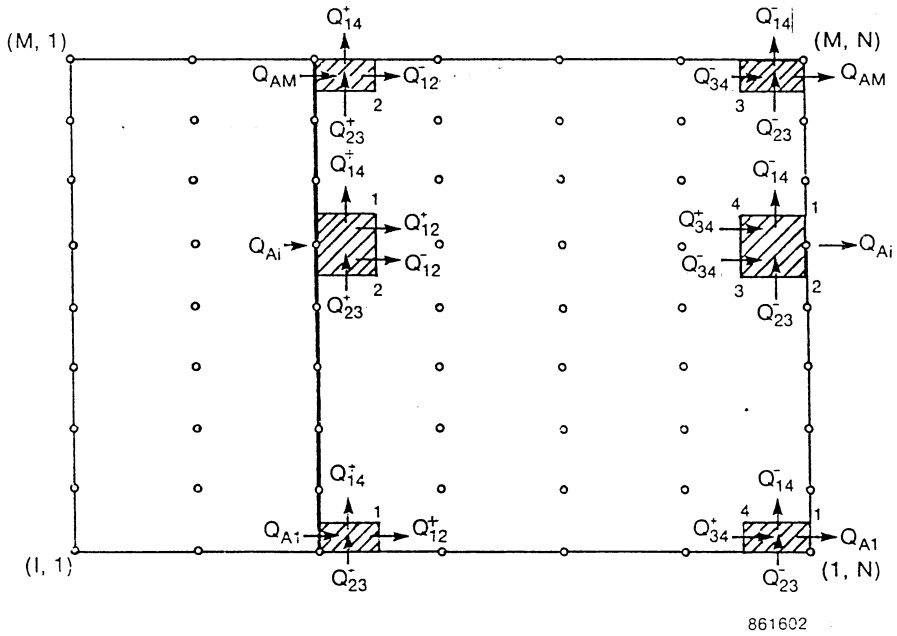

Figure 2-11. Flow Across Axial Line

After desired convergence of the Newton-Raphson process has been achieved under steady (unperturbed) conditions, the resulting steady-state pressure vectors are denoted as $\{\hat{P}\}$ and the coefficient matrices as $[\hat{C}^j]$, etc. and, as before, the steady state becomes:

$$[\hat{C}^j]\{\hat{P}_j\} + [\hat{E}^j]\{\hat{P}_{j-1}\} + [\hat{D}^j]\{\hat{P}_{j+1}\} = \{\hat{R}^j\} \tag{2-82}$$

The eccentricity components can be perturbed individually by an amount, η, and the matrix $[\hat{C}^j]$ recalculated at the new film thickness (but old pressure distribution, $\hat{P}$); then subtract $[\hat{C}^j]$ at the old film thickness and divide the difference by η to numerically obtain the partial derivative of $[\hat{C}^j]$ with respect to the eccentricity perturbation. This partial derivative will be denoted by $[\hat{C}^{j,k}]$.

Thus,

$$[\hat{C}^{j,k}] = \frac{[\hat{C}^j]|_{\epsilon_k+\eta} - [\hat{C}^j]|_{\epsilon_k}}{\eta} \tag{2-83}$$

The matrices $[\hat{E}^{j,k}]$, $[\hat{D}^{j,k}]$ and $[\hat{R}^{j,k}\}$ are obtained in a similar manner. Equation (2-78) may now formally be differentiated with respect to ε_k to obtain the expression:

$$[\hat{C}^j]\{\hat{P}'^{,k}_j\} + [\hat{E}^j]\{\hat{P}'^{,k}_{j-1}\} + [\hat{D}^j]\{\hat{P}'^{,k}_{j+1}\} = \{\hat{R}^{j,k}\} - [\hat{C}^{j,k}]\{\hat{P}_j\} - [\hat{E}^{j,k}]\{\hat{P}_{j-1}\} - [\hat{D}^{j,k}]\{\hat{P}_{j+1}\} \tag{2-84}$$

where $\{\hat{P}_j^{,k}\} = \partial\{\hat{P}_j\}/\partial\varepsilon_k$ is the zero-frequency stiffness pressure. This expression does not yet contain the time-dependent terms found on the right-hand side of Equation (2-75). It is assumed that a sinusoidal disturbance is applied to the shaft, such that the clearance and pressure derivatives are affected as follows:

$$H = e^{i\sigma\bar{t}};\ \hat{P}^{,k}_j = P^{,k}_j e^{i\sigma\bar{t}} \tag{2-85}$$

To complete the process, the right-hand side of Equation (2-75) is differentiated with respect to ε_k and the results added to the right-hand side of Equation (2-80) with $\partial/\partial t$ replaced by $i\sigma$. The terms to be added to the right-hand side of Equation (2-80) in this manner are $-i\sigma\,[C^j](\hat{P}_j^{,k})$-$i\sigma\{\bar{R}^{j,k}\}$ where $[\bar{C}^j]$ are diagonal matrices whose components are

$$\bar{C}^j_{ii} = H_{ij}A_{ij} \tag{2-86}$$

Because a cell can have clearance discontinuities, such as a step, it is advantageous to partition the cell into four components as indicated on Figure 2-2, and then sum the components to obtain $[\bar{C}^j]$. Thus, Equation (2-82) becomes:

$$\bar{C}_{ii}^{j} = HC_1A_1 + HC_2A_2 + HC_3A_3 + HC_4A_4 \tag{2-87}$$

where HC_1 is the clearance at the corner point 1 of the cell and

$$A_1 = \frac{(\Delta\theta_j)(\Delta Z_i)}{4}$$
$$A_2 = \frac{(\Delta\theta_j)(\Delta Z_{i-1})}{4} \; ; \; etc. \tag{2-88}$$

and $\{\bar{R}^{j,k}\}$ are column vectors whose components are

$$\bar{R}_i^{j,k} = A_{ij}\frac{\partial H_{ij}}{\partial \varepsilon_k}(1 + P_{ij}) \tag{2-89}$$

By combining terms, the final set of linear difference equations for the complex stiffness pressure derivatives $(\acute{P}_j^k)$ are obtained

$$[C^{*j}]\{\acute{P}_j^k\} + [\hat{E}^j]\{\acute{P}_{j-1}^k\} + [\hat{D}^j]\{\acute{P}_{j+1}^k\} = \{R^{j,k}\} - [\hat{C}^{j,k}]\{\hat{P}_j\} - [\hat{E}^{j,k}]\{\hat{P}_{j-1}\} - [\hat{D}^{j,k}]\{\hat{P}_{j+1}\} \tag{2-90}$$

where,

$$[C^{*j}] = [\hat{C}^j] + i\sigma[\bar{C}^j] \; ; \; \{R^{j,k}\} = \{\hat{R}^{j,k}\} - i\sigma\{\bar{R}^{j,k}\} \tag{2-91}$$

The system of equations given by Equation (2-86) is solved by the column method in a directly analogous manner to that used in solving the steady-state equation. The principal difference is that all the matrix operations are performed using complex arithmetic. Integration of the real part of the pressure derivatives yields the stiffness; and the complex parts, when integrated and divided by σ, yield damping.

2.8 Critical Mass and Frequency

A critical mass routine was also added to the turbulent version of GCYLT.

For incompressible theory, a closed-form solution exists for the condition of neutral stability for a two-degree-of-freedom, point mass supported by cross-coupled springs and dampers [4]. The so-called critical mass and frequency are obtained, which provides a measure of the stability margin. If the mass attributable to a seal or bearing exceeds the critical mass, then an instability may occur at the orbital frequency calculated. A similar analysis, including the effects of

compressibility, is complicated by the frequency dependence of the coefficients. A solution exists when the computed frequency of the point mass is equal to the excitation frequency used to compute the stiffness and damping coefficients. The critical mass and the orbital frequency are given by the following equations:

$$M_c = \frac{BED}{E^2 + AED + CD^2} \tag{2-92}$$

$$\omega_c = \sqrt{\frac{-(AED + E^2 + CD^2)}{ED^2}}$$

$$\text{where } A = K_{yy} + K_{xx},\ B = D_{yx}D_{xy} - D_{xx}D_{yy} \tag{2-93}$$

$$C = K_{xx}K_{yy} - K_{xy}K_{yx};\ D = D_{yy} + D_{xx}$$

$$E = D_{xy}K_{yx} + D_{yx}K_{xy} - D_{xx}K_{yy} - D_{yy}K_{xx}$$

A Newton-Raphson algorithm was utilized. For convergence, the frequency assumed in computing stiffness and damping, ω_a, should equal the frequency computed by the critical mass equations, ω_c. Initially there will be an error, δ.

$$\omega_a - \omega_c = \delta \tag{2-94}$$

To compute the incremental change in ω_a, the following equations apply:

$$\delta^{old} + \frac{\partial \delta}{\partial \omega_a} \Delta\omega_a = 0 \tag{2-95}$$

but from Equation (2-94)

$$\frac{\partial \delta}{\partial \omega_a} = 1 - \frac{\partial \omega_c}{\partial \omega_a} = 1 - \sum_{i=1}^{2} \sum_{j=1}^{2} \left(\frac{\partial \omega_c}{\partial K_{ij}} \frac{\partial K_{ij}}{\partial \omega_a} + \frac{\partial \omega_c}{\partial D_{ij}} \frac{\partial D_{ij}}{\partial \omega_a} \right) \tag{2-96}$$

The partial derivatives, $\frac{\partial \omega_c}{\partial \omega_{ij}}$ and $\frac{\partial \omega_c}{\partial \omega_{ij}}$, can be computed directly from Equation (2-99).

The derivatives $\frac{\partial K_{ij}}{\partial \omega_2}$ and $\frac{\partial D_{ij}}{\partial \omega_2}$ are explicitly determined by computing the gas seal stiffnesses at two incremental frequencies and computing $\frac{\Delta K_{ij}}{\Delta \omega_2}$ and $\frac{\Delta D_{ij}}{\Delta \omega_2}$, respectively;

and from Equation (2-95)

$$\Delta\omega_a = \frac{\dfrac{-\delta^{old}}{\partial\delta}}{\partial\omega_a} \tag{2-97}$$

The new value of ω_2 for the next iteration is obtained from:

$$\omega_a^{new} = \omega_a^{old} + \Delta\omega_a \tag{2-98}$$

At times, the computed frequency, ω_c, was insensitive to variations in the assumed frequency, ω_a. In such cases, successive substitution was found to converge very rapidly.

The critical mass as defined above applies to a two-degree-of-freedom system. It does not include cross-coupling moments. Thus, it would not have application to seals with pressure gradients where moment cross-coupling may be significant.

2.9 Program Organization

In this section a description of the manner in which the program is organized is presented. The principal subroutines are identified by name and function, and flow charts are used liberally. Program listings are supplied under separate cover.

The main program, GCYL, is a short routine whose function is to call subroutines that set up the code for computation (see Figure 2-12).

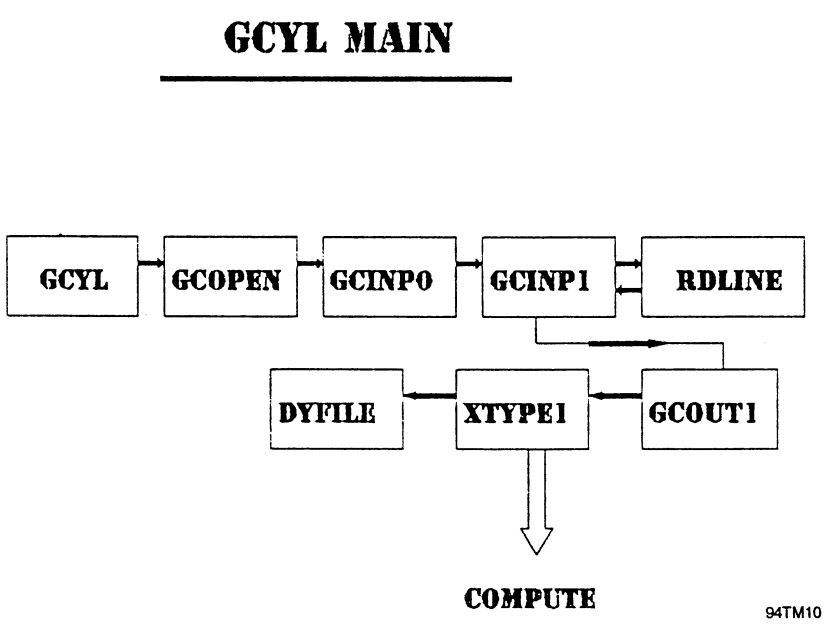

Figure 2-12. Main Program Flow Chart

The first call is to subroutine GCOPEN where various disk files are designated. Seven sequential files are established and their functions are as described in Table 2-1.

Table 2-1. Disk File Functions

Disk File	PC Extension	Description
1	HPF	Saves the pressure and clearance distribution for subsequent plotting.
2	HP	Saves the pressure and clearance distribution for initialization of subsequent problems using the FILE option.
3	DGS	A file used for diagnostic purposes.
4	"CON"	Read from or write to screen.
5	GCYL.INP	Input file
6	OUT	Output file
7	DYC	A file that stores data for subsequent dynamic runs by another code.

94TM10

The input file must be named "GCYL.INP". All other files use the filename that is defined on the first line of the input file, as well as the file extension as defined in Table 2-1.

The two input routines are GCINP0 and GCINP1. GCINP0 merely sets the default values for all optional variables. GCINP1 reads in all the input and converts dimensional numbers to dimensionless numbers for program execution. It has been deliberately set up to facilitate interactive computations on a main frame computer terminal or on an independent PC. It reads the input a line at a time, calling upon the subroutine RDLINE for every line of input read. Both routines have been set up with character variables so that input is transmitted by *name* and not strictly by numerical format in designated fields. RDLINE reads the first 80 characters on any line and assigns them to the variable CH80. It then assigns the first character of CH80 to the variable CH1 and the first six characters to the variable CH6. If the first character is an asterisk (*), a return to GCINP1 is made; if not, columns 11 through 70 of CH80 are read and assigned to VAL(I), I = 1,10. A return to GCINP1 is then made, where VAL(I) is assigned to the proper variable. For example, if CH6 is the variable DIAMET (diameter) then GCINP1 will assign VAL(I) to the variable DIA and print out its value. In this manner all input quantities are assigned and subsequently printed in the output file.

The subroutine GCOUT1 is an initial output routine that executes after the input has been read and before computational execution. It first produces a replica of the input file and then organizes input printout by geometry, film thickness specification, boundary conditions, grid model, etc. It also accomplishes several computations needed elsewhere in the program, such as the value of the dimensionless variable lambda, Λ. The principal computational routine is XTYPE1, which is subsequently described in greater detail. DYFILE writes output to an external file for use in dynamic investigations.

The XTYPE1 flow chart is shown on Figure 2-13. XTYPE1 offers two options. The first is to compute performance for a given position of the shaft within the seal; the second will determine the position of the shaft for a given load and load direction applied to the shaft. For Option 1, steady-state performance is determined by calling GCOPTA, and for Option 2, GCOPT2 is called. Further details of these significant routines are presented below.

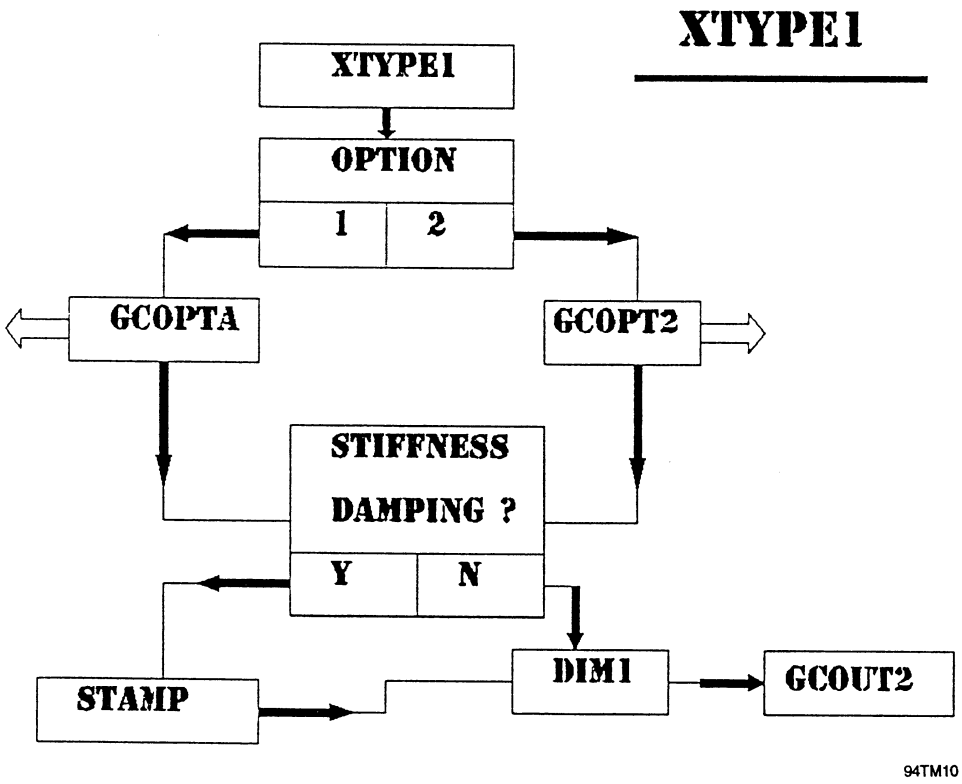

Figure 2-13. Flow Chart for Beginning Computations

After determining steady-state performance, the option of computing cross-coupled stiffness and damping is made available. Stiffness and damping are computed via the subroutine STAMP. DIM1 converts dimensionless output to dimensional numbers and GCOUT2 is the primary output file that is called when computations are completed.

GCOPTA is one of the principal interior routines that is used to compute the pressure distribution and the performance produced by various operations performed on the pressure distribution. The flow chart for GCOPTA is shown on Figure 2-14. GCOPTA first enters a pad loop, where the separate pad option of the code can be exercised. The film thickness of the pad is next determined by the subroutine FILMJ2. This routine will calculate special film thickness geometries, such as steps and lobes as well as circular clearances. The film thickness is computed at each grid point as well as at each corner point of the cell (see Figures 2-1 and 2-2).

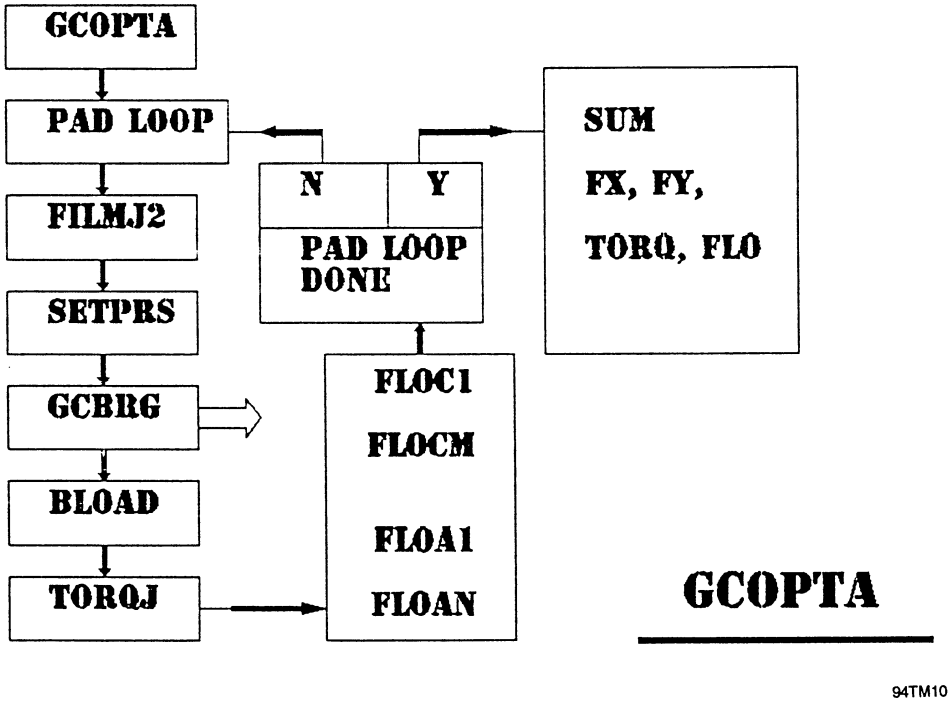

Figure 2-14. GCOPTA Flow Chart

SETPRS is a routine that sets the initial values of pressure at the grid points to the non-dimensional reference pressure of 1. These basic setup routines develop the information necessary to proceed to the actual computation of the pressures at the grid points, by calling the subroutine GCBRG. Further details of this routine will follow. After the pressures have been computed, performance parameters such as load, viscous torque and flows can be computed. BLOAD integrates the pressures over the seal area to determine load capacity. TORQJ computes viscous torques, and FLOC1 and FLOCM determine flows across circumferential lines, while FLOA1 and FLOAN determine flows across axial lines.

Figure 2-15 is a flow diagram for GCOPT2, which implements Option 2, the option that determines shaft displacements to satisfy given loads and load direction. Option 2 begins with initial guesses for the eccentricity ratios, ε_x and ε_y.

Newton-Raphson algorithms are used to produce journal displacements to balance the given loads. The requirements are that:

$$F_{XR} - F_{XC} = 0 \tag{2-99}$$

$$F_{YR} - F_{YC} = 0 \tag{2-100}$$

where,

F_{XR} = required load in X direction

F_{YR} = required load in Y direction

F_{XC} = calculated load in X direction

F_{YC} = calculated load in Y direction

but,

$$F_{XC} = F_{Xold} + \Delta F_X = F_{Xold} + \frac{\partial F_X}{\partial X}\Delta X + \frac{\partial F_X}{\partial Y}\Delta Y \tag{2-101}$$

$$F_{YC} = F_{Yold} + \Delta F_Y = F_{Yold} + \frac{\partial F_Y}{\partial X}\Delta X + \frac{\partial F_X}{\partial Y}\Delta Y \tag{2-102}$$

The partial derivatives are stiffnesses which are obtained by incrementing X and Y displacements. Equations (2-101) and (2-102) are substituted into Equations (2-100) and (2-101). The system of equations are solved for ΔX and ΔY which provides the new displacements for the next iteration. The process continues until the calculated load equals the required load within the convergence criteria.

The flow chart for this process is shown on Figure 2-15. Initial guesses are made on the displacements ε_x and ε_y and GCOPTA is called to determine the loads at the incremented displacements. Stiffnesses are determined explicitly by subtracting the incremental loads from the steady-state loads and dividing by the incremented displacement.

GCBRG (Figure 2-16) is the remaining principal routine to discuss. It is the routine that implements the column matrix method to determine the grid point pressures. It first calls NRPRC which is the core program for computing the Newton Raphson pressure coefficients. These are a series of partial derivatives and flow residues for each of the cells where a mass flow balance takes place. NRPRC calls on the subroutine QSUM which accomplishes the flow balance. It obtains the partial derivatives by sequentially incrementing the five pressures P_1 through P_5 individually and calling on QSUM for each pressure increment. The partial derivatives are equal to the incremented flow less the nonincremented flow divided by the pressure increment. These partial derivatives are determined in subroutine PD. Once the flow residues and partial derivatives of flow residues with respect to pressures are known, sufficient information is available to solve for the pressures using the column method. GCBRG will call COLP for known pressure boundary conditions or it will call COLJ for joined or periodic boundary conditions in the θ direction. Both COLP and COLJ call upon the subroutines COEFC and COEFF to form the coefficient matrices [C], [D], [E] and [R], where [C] is formulated in COEFC and the remainder in COEFF. They also call upon MATINV for the necessary matrix inversions. Once the coefficient matrices are formulated, pressures are solved for by either COLP or COLJ. A return is then made to GCBRG where the new pressures are compared against the previous ones. If convergence is not achieved within the specified tolerance, the old pressures are replaced by the new ones and the process continues until convergence is achieved or an iteration limit has been reached.

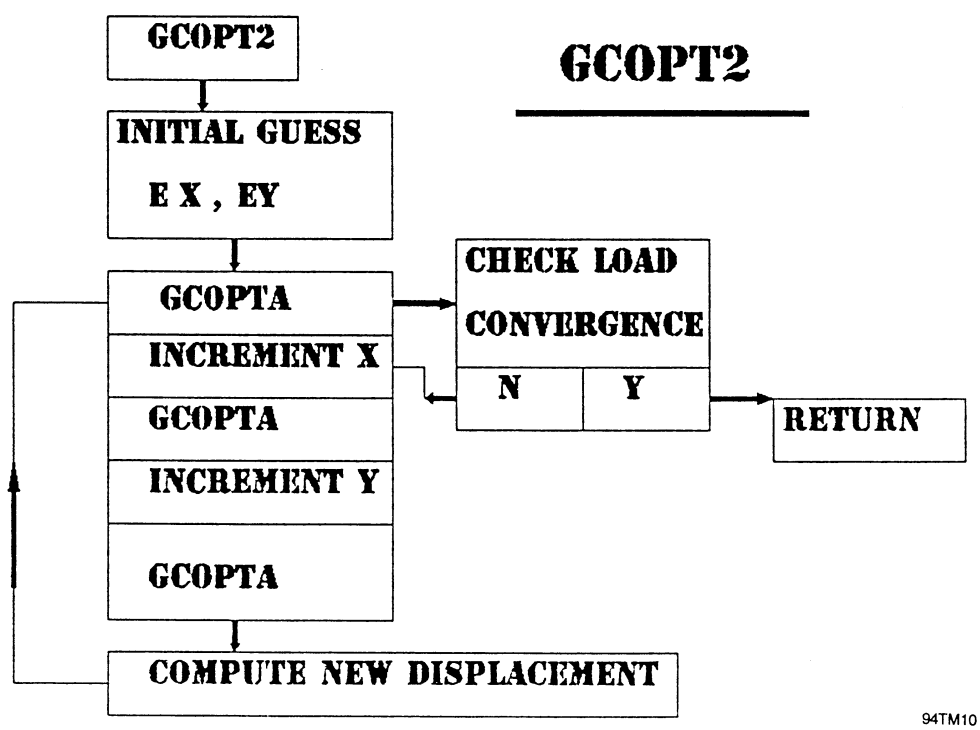

Figure 2-15. Flow Chart for GCOPT2

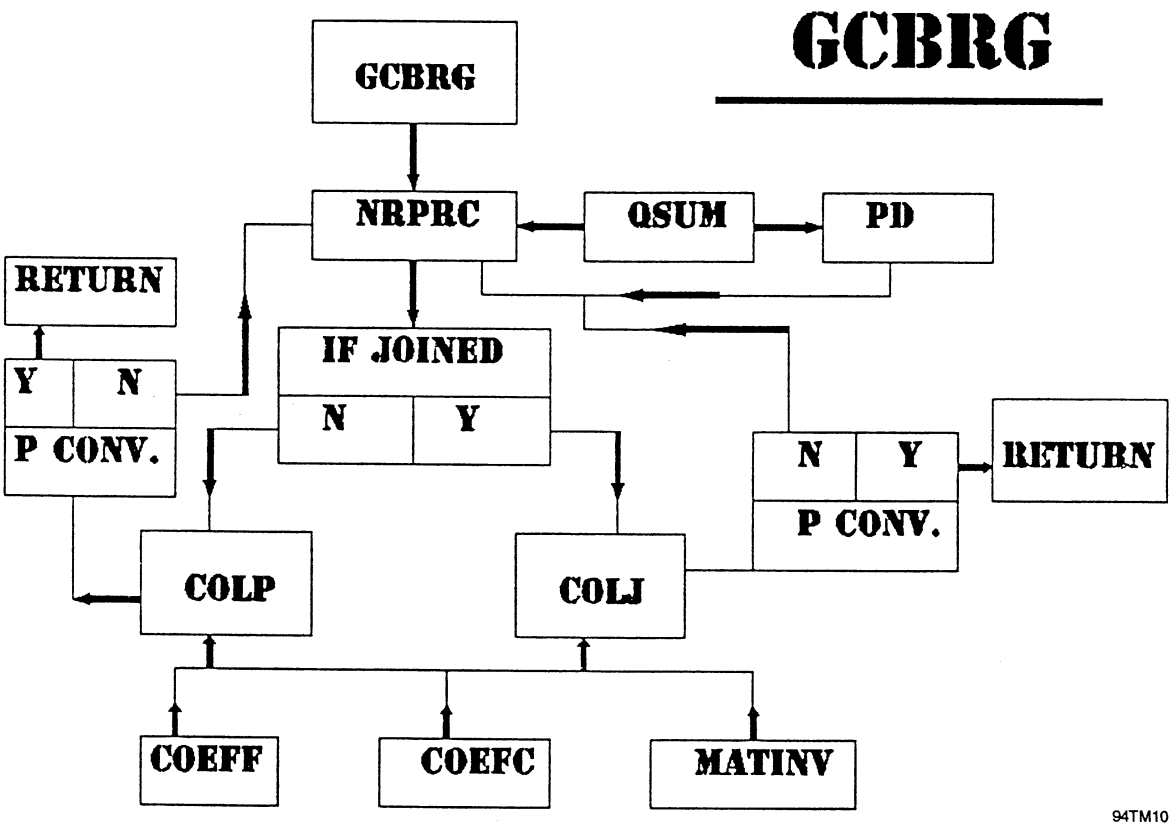

Figure 2-16. Flow Chart of GCBRG

3.0 INPUT DESCRIPTION

The program has been set up to run prespecified input files. The input file must be named GCYL.INP; however, this is automatically done when GCYL is run from the CFD Executive. The output will be given the name that was specified on the first line in the input file along with the file extension ".OUT". To run the program, the command GCYLT is executed.

The input is divided into eight principal groups, as follows:

- Group 1, Control Parameters
- Group 2, Geometry
- Group 3, Film Thickness Specification
- Group 4, Lubricant Properties
- Group 5, Additional User Controls
- Group 6, Operating Conditions
- Group 7, Hydrostatic Parameters
- Group 8, Flow Rate and End of Input.

Significant geometric nomenclature used in the computer code are shown on Figure 1-3. The seal surface is divided into a mesh and each nodal point is identified by a unique node number (I, J). The user may specify the number of nodes in both the axial and circumferential direction, in which case equally spaced nodal distribution is implied. Alternatively, the user can specify variable grid spacing, in which case the starting pad distance and subsequent distance to the grid points are individually identified.

3.1 Input Format

To facilitate generating input, two key principles have been applied. The input is identified by words, not just pure numbers, and free format of input values obviates formatting. The identifying parameter is typed in alphanumeric format in Columns 1 to 10. The values of the parameter are placed in Columns 11 through 80. If more than one line of values is required, they can be continued on the following line in free format starting in Column 1. The parameters can be inserted in any order, except for the first title line. Any line that begins with an asterisk in Column 1 is considered as a comment by the code, and the parameter and associated values are ignored in the computations. Certain parameters will have default values that the user can accept, in which case an input value does not have to be entered. If the parameter is entered, the default is overriden.

Group 1 - Control Parameters

The first input is the output Filename (no extension) which is entered in alphanumeric format in columns 1-80. This name will be used to generate all output files with their various extensions, as indicated in Table 2-1.

The second input is the title, which is entered in alphanumeric format in columns 1-80. The title will be printed with the output and will also appear on plots. A title with fewer than 60 characters is recommended.

PARAMETER IN COLUMNS 1-10	DESCRIPTION, VALUES IN COLUMNS 11-80
OPTION	There are two options. For OPTION =1, the user provides the shaft or journal position in the form of eccentricity and eccentricity angle (see Figure 2-3), and the program predicts the load and load angle. For OPTION =2, the user provides the load, load angle and initial estimates of eccentricity and eccentricity angle, and the program will determine the eccentricity and eccentricity angle. An iterative homing procedure is used for OPTION =2, and it will take more computer time than OPTION =1. The default value is OPTION =1.
UNIT	If the international or metric system of units is desired, enter SI somewhere in columns 11 through 80. The default units are English. The units for SI and English are as follows:

Description	SI	English
Length	m	in
Diameter	m	in
Clearance	m	in
Load	N	lb
Gas Const.	$m^2/(s^2\text{-}°K)$	$in^2/(s^2\text{-}°R)$
Temperature	°K	°R
Density	kg/m^3	lb/in^3
Viscosity	$N\text{-}s/m^2$	$lb\text{-}s/in^2$
Pressure	N/m^2	lb/in^2
Stiffness	N/m	lb/in.
Damping	N-s/m	lb-s/in.

*	An asterisk in column 1 is the designation for a comment. Any input following the asterisk will be treated as a comment and will not be an input parameter. This feature is useful in running multiple cases when certain input variables can be modified or eliminated. For example, if the user desires to repeat a case without stiffness and damping, an asterisk is inserted before the input parameters, and when stiffness and damping are desired, the asterisks are eliminated.
STIFFNESS	Cross-coupled frequency-dependent stiffnesses are to be computed. The program provides the option of determining stiffnesses in two or four degrees of freedom. Two degrees of freedom include the x and y modes of the center of the journal while four degrees of freedom include the two orthogonal angular modes about the mass center (see Figure 2-3). In columns 11 through 80, enter the number of degrees of freedom and the excitation frequency in rpm. Generally, synchronous frequency is used.

Group 2 - Bearing Geometry

PARAMETER IN COLUMNS 1-10	DESCRIPTION, VALUES IN COLUMNS 11-80
NPAD	The number of pads (always required).
DIAMETER	Shaft diameter (always required).
LENGTH	Seal length (always required).
CLEARANCE	Seal clearance (always required).
START	Angular location in degrees for the start of the first pad (see Figure 2-4; always required except for variable grid).
PADANGLE	The angle of the pad represented by the grid, in degrees (see Figure 2-4; always required except for variable grid).
GRIDN	Number of grid points in the circumferential direction. Maximum number is 74 (always required, except for variable grid; see Figure 1-3).
GRIDM	Number of grid points in the axial direction. Maximum number is 30 (always required except for variable grid; see Figure 1-3).
VGRIDN	Enter the number of grid points used in the circumferential direction for variable grid problems. The maximum number is 74 (see Figure 1-3). Following this entry, enter the angular location of the grid points in degrees in columns 1-80 using free format. There should be N entries. If variable grid is used, GRIDN need not be entered.
VGRIDM	Enter the number of points in the axial direction for variable grid problems. There should be M entries. The maximum number is 30 (see Figure 1-3). Following this entry, enter the axial location of the grid points in dimensional units in columns 1-80 using free format. There should be M entries. If variable grid is used, GRIDM need not be entered.
JOINED	To be entered when periodic boundary conditions apply in the circumferential direction, e.g., a complete circular seal.
SYMMETRIC	To be entered when symmetric boundary conditions apply in the axial direction. Can be applied to reduce the number of grid points in the axial direction and thus reduce computer time, or can be used to increase the effective number of grid points in the axial direction to increase accuracy. The restriction that applies to using symmetry is that misalignment cannot be specified and righting moment will not be calculated.
SECTOR	Number of sectors for a sectored lobe seal (see Figure 3-1).

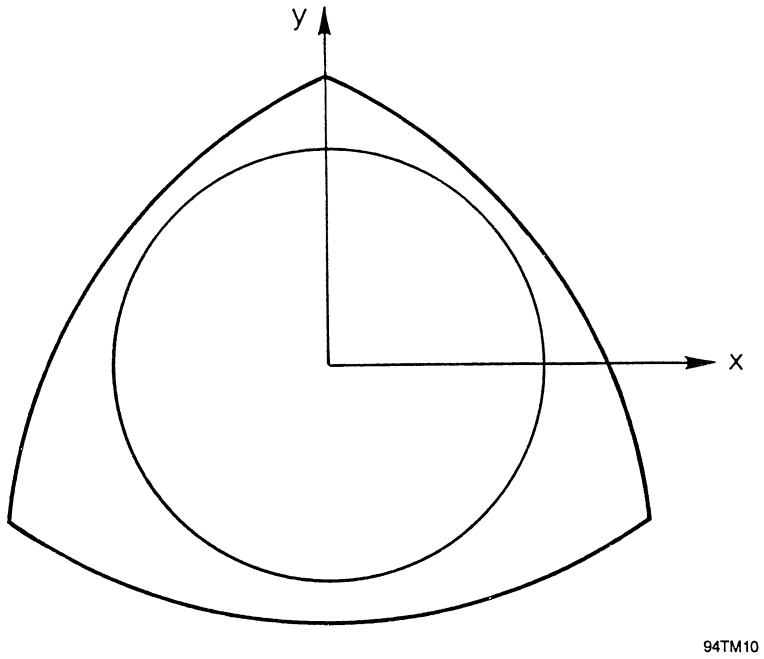

Figure 3-1. Sectored Lobe Seal

Group 3 - Film Thickness Specification

PARAMETER IN COLUMNS 1-10	DESCRIPTION, VALUES IN COLUMNS 11-80
MISALIGN	Angular misalignment of the shaft in degrees (see Figure 2-3). The first value is the misalignment about the x-axis. The second value is the misalignment about the y-axis.
STEP	Designates that a Rayleigh Step is being analyzed (see Figure 2-5). The number of steps included in the grid is specified in columns 11-80. Following the STEP input line is additional input designating the location and depth of each step. For each step, the I, J grid values of the lower left corner and upper right corner are provided, followed by the step depth. These five values can be inserted in free format anywhere from columns 1-80. One line of values for each step is required.
TAPER	An axial taper is depicted on Figure 2-6. For each taper the position of the axial node and the slope of the taper is inserted in columns 11-80.
PRELOAD	Pertains to a preloaded pad or sector (see Figure 2-4). The value entered in columns 11-80 is the pad preload/clearance.
PIVOT	The angular location of the preload from the leading edge of the pad, in degrees.

Group 4 - Lubricant Properties

PARAMETER IN COLUMNS 1-10	DESCRIPTION, VALUES IN COLUMNS 11-80
VISCOSITY	Enter the value of viscosity in units specified in the description of UNIT (always required).
ABSTEMP	Enter the absolute temperature in the units specified in the description of UNIT (always required).
SPHEAT	Enter the ratio of the specific heat at constant pressure to the specific heat at constant volume (always required).
GASCONST	Enter the gas constant in the units specified in the description of UNIT (always required).

Group 5 - Parameters for Additional User Control

PARAMETER IN COLUMNS 1-10	DESCRIPTION, VALUES IN COLUMNS 11-80
ITERATION	There are two variables that may be entered. (1) Maximum number of iterations for convergence of the pressure distribution. If the number of iterations is exceeded, the program will terminate with an error message. The default value is 10. (2) The maximum number of iterations to find the equilibrium position for OPTION = 2. This variable need only be entered if Option 2 is applied. The default value is 5. If the maximum number is exceeded, the program will terminate.
TOLERANCE	There are two variables that may be entered. (1) The tolerance on pressure convergence, and (2) the tolerance on the equilibrium position (to be entered only if Option 2 is applied). The default values are .01, and .01 respectively.
FILE	If it is desired to use the pressure distribution from a previous run, then FILE should be entered. The pressure distribution will be read from the file xxxx.HP created from the previous run. The name of the file will be the same as the name of the output file. Therefore, if it is desired to change the name of the input file for subsequent runs, the name of the .HP file should also be changed. This variable is very useful in situations where convergence problems are encountered. Low eccentricities usually converge better than high eccentricities, so that to attain the high-eccentricity case, it is sometimes required to read the initial pressure distribution from the low eccentricity case that has converged. In general, using FILE will speed convergence because of the closer initial pressure distribution.
SHORT	The short form of the output will be printed, which excludes the clearance and pressure distribution.

Group 6 - Operating Conditions

PARAMETER IN COLUMNS 1-10	DESCRIPTION, VALUES IN COLUMNS 11-80
LOAD	Required for OPTION = 2. Enter the load applied to the shaft.
LOADANGLE	Required for OPTION = 2. Enter the angular location of the applied load to the shaft in degrees.
ECC	Enter the shaft eccentricity ratio, which is the displacement/clearance. The default value is 0. For OPTION = 2, this value will be an initial guess.

ECCANGLE	Enter the angular location, in degrees, of the shaft eccentricity. For OPTION = 2, this will be an initial guess. The default value is 0.
EX	Eccentricity ratio in x direction. EX and EY are alternatives to ECC and ECCANGLE. They are not used simultaneously.
EY	Eccentricity ratio in y direction. EX and EY are alternatives to ECC and ECCANGLE. They are not used simultaneously.
SPEED	Enter the shaft speed in rpm. The default value is 0.
PO	PO is the reference gage pressure to which all other pressures are divided by in nondimensionalizing the problem. The units are specified in the description of UNIT. In most cases, atmospheric pressure is used.
PLEFT	Gage pressure at left grid boundary. Always required except for periodic boundary conditions (JOINED) applied. Units are as specified in description of parameter UNIT.
PRITE	Gage pressure at right grid boundary. Always required except for periodic boundary conditions (JOINED) applied. Units are as specified in description of parameter UNIT.
PTOP	Gage pressure at top circumferential boundary. Not required when symmetry option is used. Units are as specified in description of parameter UNIT.
PBOT	Gage pressure at bottom circumferential boundary. Units are as specified in description of parameter UNIT.
PRESSURE	This parameter is to be used when pressures are to be specified inside the grid. Enter the number of specified pressures. Following this entry the locations of the specified pressures and the values of the pressures are input. For each pressure, the location is specified by the I, J grid location, followed by the numerical value of the gage pressure. There is to be a single-line entry for each specified pressure that contains I, J gage pressure value. Units of pressure are as specified in description of parameter UNIT.
PCON	Use when constant-pressure regions are specified. In columns 11-80, input the number of regions. On the following lines, specify the region pressure and the I, J grid points of opposite corner of region. Use one line for each region. Each line would have five parameters.

Group 7 - Hydrostatic Parameters

PARAMETER IN COLUMNS 1-10	DESCRIPTION, VALUES IN COLUMNS 11-80
RECESS	Designates that hydrostatic recesses are located in the film. The number of recesses included in the grid is specified in columns 11-80. Following the RECESS input line is additional input designating the location of each recess. For each recess, the I, J grid values of the lower left corner and upper right corner are provided. These four values can be inserted in free format anywhere in columns 1-80. One line of values for each recess is required.
SOURCE	To be applied when external inherently compensated sources are to be introduced in the film. Enter the number of sources in columns 11-80. Following this entry, the locations of the sources are input. For each source, the location is specified by the I, J grid location. There is one single-line entry for each source.
SPOTRECESS	To be applied when external orifice-compensated spot recesses are to be introduced in the film. Enter the number of spot recesses in columns 11-80. Following this entry, the locations of the spot recesses are input. For each spot recess, the location is specified by the I, J grid location. There is one single line entry for each spot recess.
DO	Enter the orifice diameter for sources, recesses or spot recesses.
CD	Orifice flow coefficient. Generally varies from 0.9 to 1.0.
PS	Gage pressure upstream of orifice.

Group 8 - Flow Rate and End of Input

PARAMETER IN COLUMNS 1-10	DESCRIPTION, VALUES IN COLUMNS 11-80
FLOW	This parameter is applied when flow across an axial or circumferential grid line is desired. Enter the number of flow lines (maximum is 6). Following the FLOW line entry are the locations of each of the grid lines across which the flow is to be computed. This is done by specifying the I, J parameters at the beginning of each line and at the end of each line. Four values are entered on

	one line in columns 11-80, for each flow line; thus, there are as many line entries as there are flow lines.
END	The last card of the input file is the END card. No further input is read. This card is always required.
DIAGNO	This parameter is used to turn on "debug write" statements. If nonzero, "debug writes" will be output to the output file with extension ".DGS". This input is not required and will default to "debugs off" in the program.
STABIL	Use when critical mass and frequency are to be calculated.

3.2 Plotting Routines

The plotting routine that provides 3-D plots of the clearance and pressure distribution is exercised by the instruction:

PLOT filename

The menus indicated on Figure 3-2 show up and the ENTER key displays the first plot. A second ENTER produces the pressure plot. The various options available are indicated on Figure 3-2.

```
**READING DATA BLOCK#  1 -FILM
[PAD#  0 OUT OF   1] [DATA BLOCK#  1] FILM
                FILE BEING PLOTTED:icylgr4d
(SPACE-BAR) TOGGLES BETWEEN TEXT & GRAPHICS SCREENS
(ENTER) or (N) TO PLOT NEXT SET
(A) to toggle axial titles Now set to:ON
(B) TO SKIP TO NEXT BLOCK
(I) TO CHANGE INPUT FILE
(M) TO CHANGE MODE, NOW SET TO:    6
(O) TO CHANGE PAD PLOT OPTION NOW SET TO: PLOT ENTIRE BEARING
(P,H) TO PRINT TO LASERJET, HPGL
(Q) OR (ESC) TO QUIT PROGRAM
(S) TO SKIP NEXT SET
(T) to toggle titles ON/OFF Now set to:ON
(U) TO toggle what to plot, now set to:H+P
(V) TO CHANGE VIEW PARAMETERS
(Z) to CHANGE MAX OF VERITCAL SCALE NOW SET TO:     .00000


**READING DATA BLOCK#  2 -PRESSURE
[PAD#  1 OUT OF   1] [DATA BLOCK#  2] PRESSURE
                FILE BEING PLOTTED:icylgr4d
(SPACE-BAR) TOGGLES BETWEEN TEXT & GRAPHICS SCREENS
(ENTER) or (N) TO PLOT NEXT SET
(A) to toggle axial titles Now set to:ON
(B) TO SKIP TO NEXT BLOCK
(I) TO CHANGE INPUT FILE
(M) TO CHANGE MODE, NOW SET TO:    6
(O) TO CHANGE PAD PLOT OPTION NOW SET TO: PLOT ENTIRE BEARING
(P,H) TO PRINT TO LASERJET, HPGL
(Q) OR (ESC) TO QUIT PROGRAM
(S) TO SKIP NEXT SET
(T) to toggle titles ON/OFF Now set to:ON
(U) TO toggle what to plot, now set to:H+P
(V) TO CHANGE VIEW PARAMETERS
(Z) to CHANGE MAX OF VERITCAL SCALE NOW SET TO:     .00000



HIT:  to choose:

D     Defaults [from corner (1,1)]
C     from corner (1,N)
Z     view along z
T     view along Theta
```

94TM10

Figure 3-2. Plot Routine Menus

4.0 OUTPUT DESCRIPTION

A sample problem that produces extensive output can best illustrate the output from the code. Shown on the following pages is the output from "Sample Problem 4," which includes all of the major items that go into the output. The output is produced in a separate file that has the following format: *filename*.out. The file can be printed or edited on screen in accordance with the wishes of the user.

The first page of the output echoes the input. The title is repeated at the beginning of the first several pages. Following the input, more detailed information concerning the geometry and lubricant properties is included. Some of this information is again a repeat of input quantities. The new information provided on Page 4 is the values of the axial distance to all axial grid points and the value of the angular distance to all circumferential grid points. This information is produced whether or not the variable grid is implemented.

Since this problem has specified source points in the grid network, a specified source file, as shown on Page 6, is produced. The axial grid runs across the page and the circumferential grid runs down the page. At each grid point, an F or T is produced. T stands for TRUE, which means that a source point is located at that grid location.

Following is information on the number of iterations required to reach convergence on the pressure distribution. Since stiffness and damping are being calculated and OPTION = 2, it is necessary to calculate the pressure distribution several times.

On Pages 7 through 11, the clearance distribution is printed. The axial length runs across the page and the circumferential position proceeds down the page. Six columns of clearance are produced on each page. Subsequent pages extend the seal length until the total length is expended. Similar files are produced for the pressure distribution, which begins on Page 12. On the last page of both the clearance and pressure distribution, minimum and maximum values are provided.

On the last several pages of the output, important summary information is produced, including eccentricity, eccentricity angle, minimum film thickness, load capacity, load angle, power loss and leakage at both ends of the seal. Following this information are the complete matrices of cross-coupled stiffness and damping coefficients with the appropriate units provided. Righting moments about orthogonal axes through the axial center of the seal are provided next. The subsequent output provides flows requested through various specified grid lines, followed by a listing of the cross-coupled stiffness and damping.

```
GCYL      MTI     NASA SECTORED SEAL INHERENT COMPENSATION,DRAWING DIMENSIONS,DO
=.020 IN.


 ECHO OF INPUT

 NPAD       =    1          NUMBER OF PADS
 OPTION     =    2          GIVEN LOAD, LOAD ANGLE FIND EX, EY
 LOAD       =  370.0000     LOAD
 LOAD ANGLE=    270.00      LOAD ANGLE
 ECC        =    0.5000     ECCENTRICITY RATIO
 ECCANGLE   =     90.00     ECCENTRICITY ANGLE
 GRIDN      =   34          GRID POINTS IN CIRCUMFERENTIAL DIRECTION
 VGRIDN                     VARIABLE GRID IN CIRCUMFERENTIAL DIRECTION
    30.00       33.95       37.91       41.86       42.50
    43.14       49.05       54.95       60.86       61.50
    62.14       68.05       73.95       79.86       80.50
    81.14       87.05       92.95       98.86       99.50
    100.1       106.0       112.0       117.9       118.5
    119.1       125.0       131.0       136.9       137.5
    138.1       142.1       146.0       150.0
 GRIDM      =   27          GRID POINTS IN AXIAL DIRECTION
 VGRIDM                     VARIABLE GRID IN AXIAL DIRECTION
   0.0000E+00  0.6650E-01  0.1331      0.1996      0.2662
   0.3327      0.3992      0.4658      0.5324      0.5989
   0.6654      0.7320      0.7985      0.8135      0.8285
   0.8950      0.9616       1.028       1.095       1.161
    1.228       1.294       1.361       1.427       1.494
    1.561       1.627
 DIAMETER   =    2.6798     BEARING DIAMETER
 CLEARANCE  =  0.001000     BEARING CLEARANCE
 SPECIFIC   =    1.6600     SPECIFIC HEAT RATIO
 GAS CONST  = 1790000.0     GAS CONSTANT
 ABS TEMP   =    528.00     ABSOLUTE TEMPERATURE
 VISCOSITY  =  0.2900E-08   ABSOLUTE VISCOSITY
 SPEED      =      0.00     ROTATIONAL SPEED IN RPM
 MXIT1      =  15.          (FOR COMPRESSIBILITY)
 MXIT2      =   5.          (FOR OPTION 2)
 TOL1       =    0.0100     TOLERANCE(COMPRESSIBILITY)
 TOL2       =    0.0100     ITERATION(OPTION 2)
 PO         =     14.70     REFERENCE(AMBIENT)  PRESSURE
 PTOP       =     50.00     GAGE PRESSURE AT TOP BOUNDARY
 PBOT       =     50.00     GAGE PRESSURE AT BOTTOM BOUNDARY
 PLEFT      =     50.00     GAGE PRESSURE AT LEFT BOUNDARY
 PRITE      =     50.00     GAGE PRESSURE AT RIGHT BOUNDARY
 *PRELOAD    0.5
 *PIVOT      90.
 ISTIF      =    1          STIFFNESS CALCULATION
 DEGREES OF FREEDOM =   4.
 EXCITATION SPEED, RPM  =       0.0001
 INHERENTLY COMPENSATED ORIFICES
 NUMBER OF SOURCES =   6
 SPECIFIED SOURCE AT I =  14  J =   5
 SPECIFIED SOURCE AT I =  14  J =  10
 SPECIFIED SOURCE AT I =  14  J =  15
 SPECIFIED SOURCE AT I =  14  J =  20
 SPECIFIED SOURCE AT I =  14  J =  25
 SPECIFIED SOURCE AT I =  14  J =  30
 DO         =    0.0200     ORIFICE DIAMETER
 CD         =    1.0000     DISCHARGE COEFFICIENT
 PS         =    200.00     SUPPLY PRESSURE(ORIFICE)
 FLOW RATE CALCULATION
 FLOW BETWEEN NODES   1.   1. AND  27.   1.
 FLOW BETWEEN NODES   1.  34. AND  27.  34.
 FLOW BETWEEN NODES   1.   1. AND   1.  34.
 FLOW BETWEEN NODES  27.   1. AND  27.  34.
```

```
FILE                    INITIAL PRESSURE FROM PREVIOUS RUN
END                     END OF INPUT
```



```
GCYL      MTI     NASA SECTORED SEAL INHERENT COMPENSATION,DRAWING DIMENSIONS,DO
=.020 IN.


 GAS JOURNAL BEARING/SEAL


 -BEARING GEOMETRY
  NUMBER OF PADS =     1
          LENGTH =     1.627 IN
        DIAMETER =     2.680 IN
       CLEARANCE =  0.001000 IN
  STARTING ANGLE =    30.00 DEG
       PAD ANGLE =   120.00 DEG

 -LUBRICANT PROPERTIES
               VISCOSITY =  0.2900000E-08 LB-S/IN**2
            GAS CONSTANT =   1790000.     IN**2/S**2-R
        ABS. TEMPERATURE =   528.0000     DEG R
     SPECIFIC HEAT RATIO =   1.660000

 -ORIFICE RELATED PROPERTIES
  ORIFICE
      NUMBER OF ORIFICES =         6
                DIAMETER =  0.2000000E-01 IN
          DISCHARGE COEF =   1.000000
         SUPPLY PRESSURE =   200.0000     PSI
***INHERENTLY COMPENSATED

 -BOUNDARY CONDITIONS
     REFERENCE P =   14.70000     PSI
           PLEFT =   50.00000     PSI
           PRITE =   50.00000     PSI
            PTOP =   50.00000     PSI
            PBOT =   50.00000     PSI
           SPEED =  0.0000000E+00 RPM

 -BEARING MODEL
                M =   27
                N =   34
           JOINED =    F
         SYMMETRY =    F

   Z -
   0.0000E+00  0.6650E-01  0.1331      0.1996      0.2662
   0.3327      0.3992      0.4658      0.5324      0.5989
   0.6654      0.7320      0.7985      0.8135      0.8285
   0.8950      0.9616       1.028       1.095       1.161
    1.228       1.294       1.361       1.427       1.494
    1.561       1.627

   THETA -
    30.00       33.95       37.91       41.86       42.50
    43.14       49.05       54.95       60.86       61.50
    62.14       68.05       73.95       79.86       80.50
    81.14       87.05       92.95       98.86       99.50
    100.1       106.0       112.0       117.9       118.5
    119.1       125.0       131.0       136.9       137.5
    138.1       142.1       146.0       150.0

 -MAXIMUM NUMBER OF ITERATIONS
    MXIT1 =   15       (FOR COMPRESSIBILITY)
    MXIT2 =    5       (FOR OPTION 2)

 -TOLERANCE
     TOL1 =   0.01000  (FOR COMPRESSIBILITY)
```

```
     TOL2 =   0.01000  (FOR OPTION 2)

 -OPTION  =    2       GIVEN LOAD, LOAD ANGLE FIND SHAFT POSITION
```



```
GCYL      MTI     NASA SECTORED SEAL INHERENT COMPENSATION,DRAWING DIMENSIONS,DO
=.020 IN.


 SPECIFIED SOURCE
     1 F F F F F F F F F F F F F F F F F F F F F F F F F F
     2 F F F F F F F F F F F F F F F F F F F F F F F F F F
     3 F F F F F F F F F F F F F F F F F F F F F F F F F F
     4 F F F F F F F F F F F F F F F F F F F F F F F F F F
     5 F F F F F F F F F F F F T F F F F F F F F F F F F F
     6 F F F F F F F F F F F F F F F F F F F F F F F F F F
     7 F F F F F F F F F F F F F F F F F F F F F F F F F F
     8 F F F F F F F F F F F F F F F F F F F F F F F F F F
     9 F F F F F F F F F F F F F F F F F F F F F F F F F F
    10 F F F F F F F F F F F F T F F F F F F F F F F F F F
    11 F F F F F F F F F F F F F F F F F F F F F F F F F F
    12 F F F F F F F F F F F F F F F F F F F F F F F F F F
    13 F F F F F F F F F F F F F F F F F F F F F F F F F F
    14 F F F F F F F F F F F F F F F F F F F F F F F F F F
    15 F F F F F F F F F F F F T F F F F F F F F F F F F F
    16 F F F F F F F F F F F F F F F F F F F F F F F F F F
    17 F F F F F F F F F F F F F F F F F F F F F F F F F F
    18 F F F F F F F F F F F F F F F F F F F F F F F F F F
    19 F F F F F F F F F F F F F F F F F F F F F F F F F F
    20 F F F F F F F F F F F F T F F F F F F F F F F F F F
    21 F F F F F F F F F F F F F F F F F F F F F F F F F F
    22 F F F F F F F F F F F F F F F F F F F F F F F F F F
    23 F F F F F F F F F F F F F F F F F F F F F F F F F F
    24 F F F F F F F F F F F F F F F F F F F F F F F F F F
    25 F F F F F F F F F F F F T F F F F F F F F F F F F F
    26 F F F F F F F F F F F F F F F F F F F F F F F F F F
    27 F F F F F F F F F F F F F F F F F F F F F F F F F F
    28 F F F F F F F F F F F F F F F F F F F F F F F F F F
    29 F F F F F F F F F F F F F F F F F F F F F F F F F F
    30 F F F F F F F F F F F F T F F F F F F F F F F F F F
    31 F F F F F F F F F F F F F F F F F F F F F F F F F F
    32 F F F F F F F F F F F F F F F F F F F F F F F F F F
    33 F F F F F F F F F F F F F F F F F F F F F F F F F F
    34 F F F F F F F F F F F F F F F F F F F F F F F F F F
 PAD #  1  PRESSURE CALCULATION CONVERGED IN  3 ITERATIONS
 PAD #  1  PRESSURE CALCULATION CONVERGED IN  1 ITERATIONS
 PAD #  1  PRESSURE CALCULATION CONVERGED IN  1 ITERATIONS
 PAD #  1  PRESSURE CALCULATION CONVERGED IN  2 ITERATIONS
```

NON-DIM CLEARANCE DISTRIBUTION(H/C) FOR PAD NUMBER 1

	I =	1	2	3	4	5	6
	AXIAL LENGTH IN.	0.000	0.067	0.133	0.200	0.266	0.333
J	DEG.						
1	30.0	0.700	0.700	0.700	0.700	0.700	0.700
2	34.0	0.665	0.665	0.665	0.665	0.665	0.665
3	37.9	0.631	0.631	0.631	0.631	0.631	0.631
4	41.9	0.600	0.600	0.600	0.600	0.600	0.600
5	42.5	0.595	0.595	0.595	0.595	0.595	0.595
6	43.1	0.590	0.590	0.590	0.590	0.590	0.590
7	49.0	0.547	0.547	0.547	0.547	0.547	0.547
8	55.0	0.509	0.509	0.509	0.509	0.509	0.509
9	60.9	0.476	0.476	0.476	0.476	0.476	0.476
10	61.5	0.473	0.473	0.473	0.473	0.473	0.473
11	62.1	0.470	0.470	0.470	0.470	0.470	0.470
12	68.0	0.444	0.444	0.444	0.444	0.444	0.444
13	74.0	0.423	0.423	0.423	0.423	0.423	0.423
14	79.9	0.409	0.409	0.409	0.409	0.409	0.409
15	80.5	0.408	0.408	0.408	0.408	0.408	0.408
16	81.1	0.407	0.407	0.407	0.407	0.407	0.407
17	87.0	0.401	0.401	0.401	0.401	0.401	0.401
18	93.0	0.401	0.401	0.401	0.401	0.401	0.401
19	98.9	0.407	0.407	0.407	0.407	0.407	0.407
20	99.5	0.408	0.408	0.408	0.408	0.408	0.408
21	100.1	0.409	0.409	0.409	0.409	0.409	0.409
22	106.0	0.423	0.423	0.423	0.423	0.423	0.423
23	112.0	0.444	0.444	0.444	0.444	0.444	0.444
24	117.9	0.470	0.470	0.470	0.470	0.470	0.470
25	118.5	0.473	0.473	0.473	0.473	0.473	0.473
26	119.1	0.476	0.476	0.476	0.476	0.476	0.476
27	125.0	0.509	0.509	0.509	0.509	0.509	0.509
28	131.0	0.547	0.547	0.547	0.547	0.547	0.547
29	136.9	0.590	0.590	0.590	0.590	0.590	0.590
30	137.5	0.595	0.595	0.595	0.595	0.595	0.595
31	138.1	0.600	0.600	0.600	0.600	0.600	0.600
32	142.1	0.631	0.631	0.631	0.631	0.631	0.631
33	146.0	0.665	0.665	0.665	0.665	0.665	0.665
34	150.0	0.700	0.700	0.700	0.700	0.700	0.700

NON-DIM CLEARANCE DISTRIBUTION(H/C) FOR PAD NUMBER 1

	I =	7	8	9	10	11	12
	AXIAL LENGTH IN.	0.399	0.466	0.532	0.599	0.665	0.732
J	DEG.						
1	30.0	0.700	0.700	0.700	0.700	0.700	0.700
2	34.0	0.665	0.665	0.665	0.665	0.665	0.665
3	37.9	0.631	0.631	0.631	0.631	0.631	0.631
4	41.9	0.600	0.600	0.600	0.600	0.600	0.600
5	42.5	0.595	0.595	0.595	0.595	0.595	0.595
6	43.1	0.590	0.590	0.590	0.590	0.590	0.590
7	49.0	0.547	0.547	0.547	0.547	0.547	0.547
8	55.0	0.509	0.509	0.509	0.509	0.509	0.509
9	60.9	0.476	0.476	0.476	0.476	0.476	0.476
10	61.5	0.473	0.473	0.473	0.473	0.473	0.473
11	62.1	0.470	0.470	0.470	0.470	0.470	0.470
12	68.0	0.444	0.444	0.444	0.444	0.444	0.444
13	74.0	0.423	0.423	0.423	0.423	0.423	0.423
14	79.9	0.409	0.409	0.409	0.409	0.409	0.409
15	80.5	0.408	0.408	0.408	0.408	0.408	0.408
16	81.1	0.407	0.407	0.407	0.407	0.407	0.407
17	87.0	0.401	0.401	0.401	0.401	0.401	0.401
18	93.0	0.401	0.401	0.401	0.401	0.401	0.401
19	98.9	0.407	0.407	0.407	0.407	0.407	0.407
20	99.5	0.408	0.408	0.408	0.408	0.408	0.408
21	100.1	0.409	0.409	0.409	0.409	0.409	0.409
22	106.0	0.423	0.423	0.423	0.423	0.423	0.423
23	112.0	0.444	0.444	0.444	0.444	0.444	0.444
24	117.9	0.470	0.470	0.470	0.470	0.470	0.470
25	118.5	0.473	0.473	0.473	0.473	0.473	0.473
26	119.1	0.476	0.476	0.476	0.476	0.476	0.476
27	125.0	0.509	0.509	0.509	0.509	0.509	0.509
28	131.0	0.547	0.547	0.547	0.547	0.547	0.547
29	136.9	0.590	0.590	0.590	0.590	0.590	0.590
30	137.5	0.595	0.595	0.595	0.595	0.595	0.595
31	138.1	0.600	0.600	0.600	0.600	0.600	0.600
32	142.1	0.631	0.631	0.631	0.631	0.631	0.631
33	146.0	0.665	0.665	0.665	0.665	0.665	0.665
34	150.0	0.700	0.700	0.700	0.700	0.700	0.700

NON-DIM CLEARANCE DISTRIBUTION(H/C) FOR PAD NUMBER 1

	I =	13	14	15	16	17	18
	AXIAL LENGTH IN.	0.799	0.814	0.829	0.895	0.962	1.028
J	DEG.						
1	30.0	0.700	0.700	0.700	0.700	0.700	0.700
2	34.0	0.665	0.665	0.665	0.665	0.665	0.665
3	37.9	0.631	0.631	0.631	0.631	0.631	0.631
4	41.9	0.600	0.600	0.600	0.600	0.600	0.600
5	42.5	0.595	0.595	0.595	0.595	0.595	0.595
6	43.1	0.590	0.590	0.590	0.590	0.590	0.590
7	49.0	0.547	0.547	0.547	0.547	0.547	0.547
8	55.0	0.509	0.509	0.509	0.509	0.509	0.509
9	60.9	0.476	0.476	0.476	0.476	0.476	0.476
10	61.5	0.473	0.473	0.473	0.473	0.473	0.473
11	62.1	0.470	0.470	0.470	0.470	0.470	0.470
12	68.0	0.444	0.444	0.444	0.444	0.444	0.444
13	74.0	0.423	0.423	0.423	0.423	0.423	0.423
14	79.9	0.409	0.409	0.409	0.409	0.409	0.409
15	80.5	0.408	0.408	0.408	0.408	0.408	0.408
16	81.1	0.407	0.407	0.407	0.407	0.407	0.407
17	87.0	0.401	0.401	0.401	0.401	0.401	0.401
18	93.0	0.401	0.401	0.401	0.401	0.401	0.401
19	98.9	0.407	0.407	0.407	0.407	0.407	0.407
20	99.5	0.408	0.408	0.408	0.408	0.408	0.408
21	100.1	0.409	0.409	0.409	0.409	0.409	0.409
22	106.0	0.423	0.423	0.423	0.423	0.423	0.423
23	112.0	0.444	0.444	0.444	0.444	0.444	0.444
24	117.9	0.470	0.470	0.470	0.470	0.470	0.470
25	118.5	0.473	0.473	0.473	0.473	0.473	0.473
26	119.1	0.476	0.476	0.476	0.476	0.476	0.476
27	125.0	0.509	0.509	0.509	0.509	0.509	0.509
28	131.0	0.547	0.547	0.547	0.547	0.547	0.547
29	136.9	0.590	0.590	0.590	0.590	0.590	0.590
30	137.5	0.595	0.595	0.595	0.595	0.595	0.595
31	138.1	0.600	0.600	0.600	0.600	0.600	0.600
32	142.1	0.631	0.631	0.631	0.631	0.631	0.631
33	146.0	0.665	0.665	0.665	0.665	0.665	0.665
34	150.0	0.700	0.700	0.700	0.700	0.700	0.700

NON-DIM CLEARANCE DISTRIBUTION(H/C) FOR PAD NUMBER 1

	I =	19	20	21	22	23	24
	AXIAL LENGTH IN.	1.095	1.161	1.228	1.294	1.361	1.427
J	DEG.						
1	30.0	0.700	0.700	0.700	0.700	0.700	0.700
2	34.0	0.665	0.665	0.665	0.665	0.665	0.665
3	37.9	0.631	0.631	0.631	0.631	0.631	0.631
4	41.9	0.600	0.600	0.600	0.600	0.600	0.600
5	42.5	0.595	0.595	0.595	0.595	0.595	0.595
6	43.1	0.590	0.590	0.590	0.590	0.590	0.590
7	49.0	0.547	0.547	0.547	0.547	0.547	0.547
8	55.0	0.509	0.509	0.509	0.509	0.509	0.509
9	60.9	0.476	0.476	0.476	0.476	0.476	0.476
10	61.5	0.473	0.473	0.473	0.473	0.473	0.473
11	62.1	0.470	0.470	0.470	0.470	0.470	0.470
12	68.0	0.444	0.444	0.444	0.444	0.444	0.444
13	74.0	0.423	0.423	0.423	0.423	0.423	0.423
14	79.9	0.409	0.409	0.409	0.409	0.409	0.409
15	80.5	0.408	0.408	0.408	0.408	0.408	0.408
16	81.1	0.407	0.407	0.407	0.407	0.407	0.407
17	87.0	0.401	0.401	0.401	0.401	0.401	0.401
18	93.0	0.401	0.401	0.401	0.401	0.401	0.401
19	98.9	0.407	0.407	0.407	0.407	0.407	0.407
20	99.5	0.408	0.408	0.408	0.408	0.408	0.408
21	100.1	0.409	0.409	0.409	0.409	0.409	0.409
22	106.0	0.423	0.423	0.423	0.423	0.423	0.423
23	112.0	0.444	0.444	0.444	0.444	0.444	0.444
24	117.9	0.470	0.470	0.470	0.470	0.470	0.470
25	118.5	0.473	0.473	0.473	0.473	0.473	0.473
26	119.1	0.476	0.476	0.476	0.476	0.476	0.476
27	125.0	0.509	0.509	0.509	0.509	0.509	0.509
28	131.0	0.547	0.547	0.547	0.547	0.547	0.547
29	136.9	0.590	0.590	0.590	0.590	0.590	0.590
30	137.5	0.595	0.595	0.595	0.595	0.595	0.595
31	138.1	0.600	0.600	0.600	0.600	0.600	0.600
32	142.1	0.631	0.631	0.631	0.631	0.631	0.631
33	146.0	0.665	0.665	0.665	0.665	0.665	0.665
34	150.0	0.700	0.700	0.700	0.700	0.700	0.700

NON-DIM CLEARANCE DISTRIBUTION(H/C) FOR PAD NUMBER 1

	I =	25	26	27
	AXIAL LENGTH IN.	1.494	1.561	1.627
J	DEG.			
1	30.0	0.700	0.700	0.700
2	34.0	0.665	0.665	0.665
3	37.9	0.631	0.631	0.631
4	41.9	0.600	0.600	0.600
5	42.5	0.595	0.595	0.595
6	43.1	0.590	0.590	0.590
7	49.0	0.547	0.547	0.547
8	55.0	0.509	0.509	0.509
9	60.9	0.476	0.476	0.476
10	61.5	0.473	0.473	0.473
11	62.1	0.470	0.470	0.470
12	68.0	0.444	0.444	0.444
13	74.0	0.423	0.423	0.423
14	79.9	0.409	0.409	0.409
15	80.5	0.408	0.408	0.408
16	81.1	0.407	0.407	0.407
17	87.0	0.401	0.401	0.401
18	93.0	0.401	0.401	0.401
19	98.9	0.407	0.407	0.407
20	99.5	0.408	0.408	0.408
21	100.1	0.409	0.409	0.409
22	106.0	0.423	0.423	0.423
23	112.0	0.444	0.444	0.444
24	117.9	0.470	0.470	0.470
25	118.5	0.473	0.473	0.473
26	119.1	0.476	0.476	0.476
27	125.0	0.509	0.509	0.509
28	131.0	0.547	0.547	0.547
29	136.9	0.590	0.590	0.590
30	137.5	0.595	0.595	0.595
31	138.1	0.600	0.600	0.600
32	142.1	0.631	0.631	0.631
33	146.0	0.665	0.665	0.665
34	150.0	0.700	0.700	0.700

MIN. CLEAR.= 0.40091 AT 87.047 DEGREES

MAX. CLEAR.= 0.70006 AT 150.00 DEGREES

PRESSURE DISTRIBUTION (PSI) FOR PAD NUMBER 1

	I =	1	2	3	4	5	6
	AXIAL LENGTH IN.	0.000	0.067	0.133	0.200	0.266	0.333
J	DEG.						
1	30.0	50.0	50.0	50.0	50.0	50.0	50.0
2	34.0	50.0	51.3	52.6	54.0	55.5	57.2
3	37.9	50.0	52.7	55.4	58.2	61.1	64.2
4	41.9	50.0	54.2	58.2	62.2	66.4	70.8
5	42.5	50.0	54.4	58.6	62.9	67.2	71.8
6	43.1	50.0	54.6	59.1	63.5	68.0	72.7
7	49.0	50.0	56.7	62.9	68.9	74.8	80.8
8	55.0	50.0	58.5	66.3	73.6	80.6	87.6
9	60.9	50.0	60.1	69.2	77.5	85.5	93.2
10	61.5	50.0	60.3	69.4	77.9	85.9	93.7
11	62.1	50.0	60.4	69.7	78.2	86.4	94.2
12	68.0	50.0	61.7	71.9	81.1	89.8	98.1
13	74.0	50.0	62.6	73.5	83.3	92.4	101.
14	79.9	50.0	63.3	74.7	84.9	94.3	103.
15	80.5	50.0	63.3	74.7	85.0	94.4	103.
16	81.1	50.0	63.4	74.8	85.1	94.6	104.
17	87.0	50.0	63.6	75.3	85.7	95.3	104.
18	93.0	50.0	63.6	75.3	85.7	95.3	104.
19	98.9	50.0	63.4	74.8	85.1	94.6	104.
20	99.5	50.0	63.3	74.7	85.0	94.4	103.
21	100.1	50.0	63.3	74.7	84.9	94.3	103.
22	106.0	50.0	62.6	73.5	83.3	92.4	101.
23	112.0	50.0	61.7	71.9	81.1	89.8	98.1
24	117.9	50.0	60.4	69.7	78.2	86.4	94.2
25	118.5	50.0	60.3	69.4	77.9	85.9	93.7
26	119.1	50.0	60.1	69.2	77.5	85.5	93.2
27	125.0	50.0	58.5	66.3	73.6	80.6	87.6
28	131.0	50.0	56.7	62.9	68.9	74.8	80.8
29	136.9	50.0	54.6	59.1	63.5	68.0	72.7
30	137.5	50.0	54.4	58.6	62.9	67.2	71.8
31	138.1	50.0	54.2	58.2	62.2	66.4	70.8
32	142.1	50.0	52.7	55.4	58.2	61.1	64.2
33	146.0	50.0	51.3	52.6	54.0	55.5	57.2
34	150.0	50.0	50.0	50.0	50.0	50.0	50.0

PRESSURE DISTRIBUTION (PSI) FOR PAD NUMBER 1

	I =	7	8	9	10	11	12
	AXIAL LENGTH IN.	0.399	0.466	0.532	0.599	0.665	0.732
J	DEG.						
1	30.0	50.0	50.0	50.0	50.0	50.0	50.0
2	34.0	59.0	61.2	63.7	66.5	69.5	72.3
3	37.9	67.7	71.7	76.3	81.7	87.8	94.3
4	41.9	75.6	81.0	87.3	94.8	104.	117.
5	42.5	76.8	82.3	88.7	96.4	106.	119.
6	43.1	77.9	83.6	90.2	98.0	108.	121.
7	49.0	87.0	93.4	100.	107.	114.	120.
8	55.0	94.5	102.	109.	116.	122.	128.
9	60.9	101.	109.	117.	125.	135.	146.
10	61.5	101.	109.	117.	126.	136.	147.
11	62.1	102.	110.	118.	127.	136.	148.
12	68.0	106.	114.	122.	129.	136.	142.
13	74.0	109.	117.	125.	132.	139.	144.
14	79.9	112.	120.	128.	137.	146.	157.
15	80.5	112.	120.	129.	137.	146.	157.
16	81.1	112.	120.	129.	137.	146.	157.
17	87.0	113.	121.	129.	136.	143.	148.
18	93.0	113.	121.	129.	136.	143.	148.
19	98.9	112.	120.	129.	137.	146.	157.
20	99.5	112.	120.	129.	137.	146.	157.
21	100.1	112.	120.	128.	137.	146.	157.
22	106.0	109.	117.	125.	132.	139.	144.
23	112.0	106.	114.	122.	129.	136.	142.
24	117.9	102.	110.	118.	127.	136.	148.
25	118.5	101.	109.	117.	126.	136.	147.
26	119.1	101.	109.	117.	125.	135.	146.
27	125.0	94.5	102.	109.	116.	122.	128.
28	131.0	87.0	93.4	100.	107.	114.	120.
29	136.9	77.9	83.6	90.2	98.0	108.	121.
30	137.5	76.8	82.3	88.7	96.4	106.	119.
31	138.1	75.6	81.0	87.3	94.8	104.	117.
32	142.1	67.7	71.7	76.3	81.7	87.8	94.3
33	146.0	59.0	61.2	63.7	66.5	69.5	72.3
34	150.0	50.0	50.0	50.0	50.0	50.0	50.0

PRESSURE DISTRIBUTION (PSI) FOR PAD NUMBER 1

	I =	13	14	15	16	17	18
	AXIAL LENGTH IN.	0.799	0.814	0.829	0.895	0.962	1.028
J	DEG.						
1	30.0	50.0	50.0	50.0	50.0	50.0	50.0
2	34.0	74.1	74.1	74.1	72.3	69.5	66.5
3	37.9	99.7	99.9	99.7	94.3	87.8	81.7
4	41.9	136.	139.	136.	117.	104.	94.8
5	42.5	142.	176.	142.	119.	106.	96.4
6	43.1	139.	143.	139.	121.	108.	98.0
7	49.0	124.	125.	124.	120.	114.	107.
8	55.0	132.	132.	132.	128.	122.	116.
9	60.9	160.	163.	160.	146.	135.	125.
10	61.5	165.	191.	165.	147.	136.	126.
11	62.1	163.	165.	163.	148.	136.	127.
12	68.0	146.	146.	146.	142.	136.	129.
13	74.0	148.	148.	148.	144.	139.	132.
14	79.9	170.	172.	170.	157.	146.	137.
15	80.5	174.	196.	174.	157.	146.	137.
16	81.1	170.	173.	170.	157.	146.	137.
17	87.0	152.	152.	152.	148.	143.	136.
18	93.0	152.	152.	152.	148.	143.	136.
19	98.9	170.	173.	170.	157.	146.	137.
20	99.5	174.	196.	174.	157.	146.	137.
21	100.1	170.	172.	170.	157.	146.	137.
22	106.0	148.	148.	148.	144.	139.	132.
23	112.0	146.	146.	146.	142.	136.	129.
24	117.9	163.	165.	163.	148.	136.	127.
25	118.5	165.	191.	165.	147.	136.	126.
26	119.1	160.	163.	160.	146.	135.	125.
27	125.0	132.	132.	132.	128.	122.	116.
28	131.0	124.	125.	124.	120.	114.	107.
29	136.9	139.	143.	139.	121.	108.	98.0
30	137.5	142.	176.	142.	119.	106.	96.4
31	138.1	136.	139.	136.	117.	104.	94.8
32	142.1	99.7	99.9	99.7	94.3	87.8	81.7
33	146.0	74.1	74.1	74.1	72.3	69.5	66.5
34	150.0	50.0	50.0	50.0	50.0	50.0	50.0

PRESSURE DISTRIBUTION (PSI) FOR PAD NUMBER 1

	I =	19	20	21	22	23	24
	AXIAL LENGTH IN.	1.095	1.161	1.228	1.294	1.361	1.427
J	DEG.						
1	30.0	50.0	50.0	50.0	50.0	50.0	50.0
2	34.0	63.7	61.2	59.0	57.2	55.5	54.0
3	37.9	76.3	71.7	67.7	64.2	61.1	58.2
4	41.9	87.2	81.0	75.6	70.8	66.4	62.2
5	42.5	88.7	82.3	76.8	71.8	67.2	62.9
6	43.1	90.1	83.6	77.9	72.7	68.0	63.5
7	49.0	100.	93.4	87.0	80.8	74.8	68.9
8	55.0	109.	102.	94.5	87.6	80.6	73.6
9	60.9	117.	109.	101.	93.2	85.5	77.5
10	61.5	117.	109.	101.	93.7	85.9	77.9
11	62.1	118.	110.	102.	94.2	86.4	78.2
12	68.0	122.	114.	106.	98.1	89.8	81.1
13	74.0	125.	117.	109.	101.	92.4	83.3
14	79.9	128.	120.	112.	103.	94.3	84.9
15	80.5	129.	120.	112.	103.	94.4	85.0
16	81.1	129.	120.	112.	104.	94.6	85.1
17	87.0	129.	121.	113.	104.	95.3	85.7
18	93.0	129.	121.	113.	104.	95.3	85.7
19	98.9	129.	120.	112.	104.	94.6	85.1
20	99.5	129.	120.	112.	103.	94.4	85.0
21	100.1	128.	120.	112.	103.	94.3	84.9
22	106.0	125.	117.	109.	101.	92.4	83.3
23	112.0	122.	114.	106.	98.1	89.8	81.1
24	117.9	118.	110.	102.	94.2	86.4	78.2
25	118.5	117.	109.	101.	93.7	85.9	77.9
26	119.1	117.	109.	101.	93.2	85.5	77.5
27	125.0	109.	102.	94.5	87.6	80.6	73.6
28	131.0	100.	93.4	87.0	80.8	74.8	68.9
29	136.9	90.1	83.6	77.9	72.7	68.0	63.5
30	137.5	88.7	82.3	76.8	71.8	67.2	62.9
31	138.1	87.2	81.0	75.6	70.8	66.4	62.2
32	142.1	76.3	71.7	67.7	64.2	61.1	58.2
33	146.0	63.7	61.2	59.0	57.2	55.5	54.0
34	150.0	50.0	50.0	50.0	50.0	50.0	50.0

PRESSURE DISTRIBUTION (PSI) FOR PAD NUMBER 1

	I =	25	26	27
	AXIAL LENGTH IN.	1.494	1.561	1.627
J	DEG.			
1	30.0	50.0	50.0	50.0
2	34.0	52.6	51.3	50.0
3	37.9	55.4	52.7	50.0
4	41.9	58.2	54.2	50.0
5	42.5	58.6	54.4	50.0
6	43.1	59.1	54.6	50.0
7	49.0	62.9	56.7	50.0
8	55.0	66.3	58.5	50.0
9	60.9	69.2	60.1	50.0
10	61.5	69.4	60.3	50.0
11	62.1	69.7	60.4	50.0
12	68.0	71.9	61.7	50.0
13	74.0	73.5	62.6	50.0
14	79.9	74.7	63.3	50.0
15	80.5	74.7	63.3	50.0
16	81.1	74.8	63.4	50.0
17	87.0	75.3	63.6	50.0
18	93.0	75.3	63.6	50.0
19	98.9	74.8	63.4	50.0
20	99.5	74.7	63.3	50.0
21	100.1	74.7	63.3	50.0
22	106.0	73.5	62.6	50.0
23	112.0	71.9	61.7	50.0
24	117.9	69.7	60.4	50.0
25	118.5	69.4	60.3	50.0
26	119.1	69.2	60.1	50.0
27	125.0	66.3	58.5	50.0
28	131.0	62.9	56.7	50.0
29	136.9	59.1	54.6	50.0
30	137.5	58.6	54.4	50.0
31	138.1	58.2	54.2	50.0
32	142.1	55.4	52.7	50.0
33	146.0	52.6	51.3	50.0
34	150.0	50.0	50.0	50.0

MIN. PRESS= 50.000 AT 150.00 DEGREES

MAX. PRESS= 195.67 AT 80.500 DEGREES

```
GCYL      MTI      NASA SECTORED SEAL INHERENT COMPENSATION,DRAWING DIMENSIONS,DO
=.020 IN.


 -JOURNAL & LOAD POSITION
   ECCENTRICITY            =     0.59989
   ECCENTRICITY ANGLE      =       90.00 DEG
   MINIMUM FILM            =   0.0004009 IN
   LOAD                    =   368.3     LB
   LOAD ANGLE              =      -90.00 DEG

   POWER LOSS              =  0.0000E+00 HP

   LEAKAGE AT I = 1        =-0.31188E-04 LB/S

   LEAKAGE AT I = M        = 0.31188E-04 LB/S

 -STIFFNESS COEFFICIENTS
   PRINCIPAL  X       KXX =  0.1932E+05 LB/IN
   CROSS-COUPLED      KXY = -0.1462E-07 LB/IN
   CROSS-COUPLED      KXA =  0.4221E-07 LB/RAD
   CROSS-COUPLED      KXB =  0.1710E-02 LB/RAD
   CROSS-COUPLED      KYX =   373.5     LB/IN
   PRINCIPAL  Y       KYY =  0.9988E+05 LB/IN
   CROSS-COUPLED      KYA =  -327.9     LB/RAD
   CROSS-COUPLED      KYB =  -52.35     LB/RAD
   CROSS-COUPLED      KAX = -0.2332E-04 IN-LB/IN
   CROSS-COUPLED      KAY = -0.1051E-01 IN-LB/IN
   PRINCIPAL  A       KAA =  0.3969E+05 IN-LB/RAD
   CROSS-COUPLED      KAB =  0.2309E-06 IN-LB/RAD
   CROSS-COUPLED      KBX =  0.5791E-02 IN-LB/IN
   CROSS-COUPLED      KBY =  0.1070E-07 IN-LB/IN
   CROSS-COUPLED      KBA = -0.1036E-08 IN-LB/RAD
   PRINCIPAL  B       KBB =   6583.     IN-LB/RAD

 -DAMPING COEFFICIENTS
   PRINCIPAL  X       DXX =   15.33     LB-S/IN
   CROSS-COUPLED      DXY =  0.4412E-11 LB-S/IN
   CROSS-COUPLED      DXA = -0.6216E-11 LB-S/RAD
   CROSS-COUPLED      DXB =  0.4369E-06 LB-S/RAD
   CROSS-COUPLED      DYX = -0.3636E-01 LB-S/IN
   PRINCIPAL  Y       DYY =   95.08     LB-S/IN
   CROSS-COUPLED      DYA =  0.4663E-01 LB-S/RAD
   CROSS-COUPLED      DYB =  0.6744E-02 LB-S/RAD
   CROSS-COUPLED      DAX = -0.2624E-09 IN-LB-S/IN
   CROSS-COUPLED      DAY =  0.4819E-06 IN-LB-S/IN
   PRINCIPAL  A       DAA =   6.529     IN-LB-S/RAD
   CROSS-COUPLED      DAB = -0.4282E-09 IN-LB-S/RAD
   CROSS-COUPLED      DBX = -0.3184E-06 IN-LB-S/IN
   CROSS-COUPLED      DBY = -0.7175E-12 IN-LB-S/IN
   CROSS-COUPLED      DBA = -0.5305E-12 IN-LB-S/RAD
   PRINCIPAL  B       DBB =   1.332     IN-LB-S/RAD

 -RIGHTING MOMENT
   ABOUT X-X          MX =  0.2836E-05 LB-IN
   ABOUT Y-Y          MY = -0.1380E-13 LB-IN


 -FLOW THRU SPECIFIED GRID LINE
  FROM   1   1  TO  27   1    FLOW= -0.5077E-04 LB/S


 -FLOW THRU SPECIFIED GRID LINE
  FROM   1  34  TO  27  34    FLOW=  0.5077E-04 LB/S
```



```
 -FLOW THRU SPECIFIED GRID LINE
  FROM   1   1  TO   1  34    FLOW= -0.3119E-04 LB/S


 -FLOW THRU SPECIFIED GRID LINE
  FROM  27   1  TO  27  34    FLOW=  0.3119E-04 LB/S
```

```
GCYL      MTI     NASA SECTORED SEAL INHERENT COMPENSATION,DRAWING DIMENSIONS,DO
=.020 IN.

 ECHO OF INPUT

NO MORE INPUT, PROGRAM TERMINATED
```

5.0 SAMPLE PROBLEMS

5.1 Rayleigh-Step Seal

The first sample problem is a four-pad Rayleigh-step seal (refer to Figure 5-1). The geometry and operating conditions are as follows:

- Number of pads = 4
- OPTION = 1, i.e., the position of the seal will be prespecified
- Seal length = 3.852 in.; the symmetry option will be used
- Variable grid will be used in the axial and circumferential directions. Since symmetry has been applied in the axial direction, the variable grid length equals half the actual length, and is equal to 1.926 in.
- Grid will be made finer at the step boundaries where sharp pressure gradients are expected to occur
- Seal diameter = 1.9685 in.
- Step height = 0.00165 in. deep, located at the leading edge of the pad, 5° from the x axis; the lower left corner of the step is 0.655 in. from the inside radius. The end of the step is 70.6° from the x axis, and since symmetry has been invoked, the axial end of the step as represented on the grid is 1.926 in. from the inlet end, or at the end of the grid.
- Specific heat ratio of the lubricant = 1.4
- Gas constant = 250,000 $in^2/(s^2\text{-}°R)$
- Absolute temperature = 530°R
- Absolute viscosity = 3.0×10^{-9} $lb\text{-}s/in^2$
- Eccentricity ratio = 0.4
- Eccentricity angle = 270°
- Shaft speed = 70,000 rpm
- Reference pressure = 200 psig
- Boundary pressures are all 0 psig, or 200 psia.

The computer input and output for Sample Problem 1 are presented in the following pages. Figures 5-2 and 5-3 show the clearance distribution and the pressure distribution produced by the plotting programs. These plots clearly show the highly loaded pad, which is pad number 3 (highest pressure level and lowest film thickness level). In the diskette supplied with this manual, this sample problem is identified as SAMPLE1A.XXX.

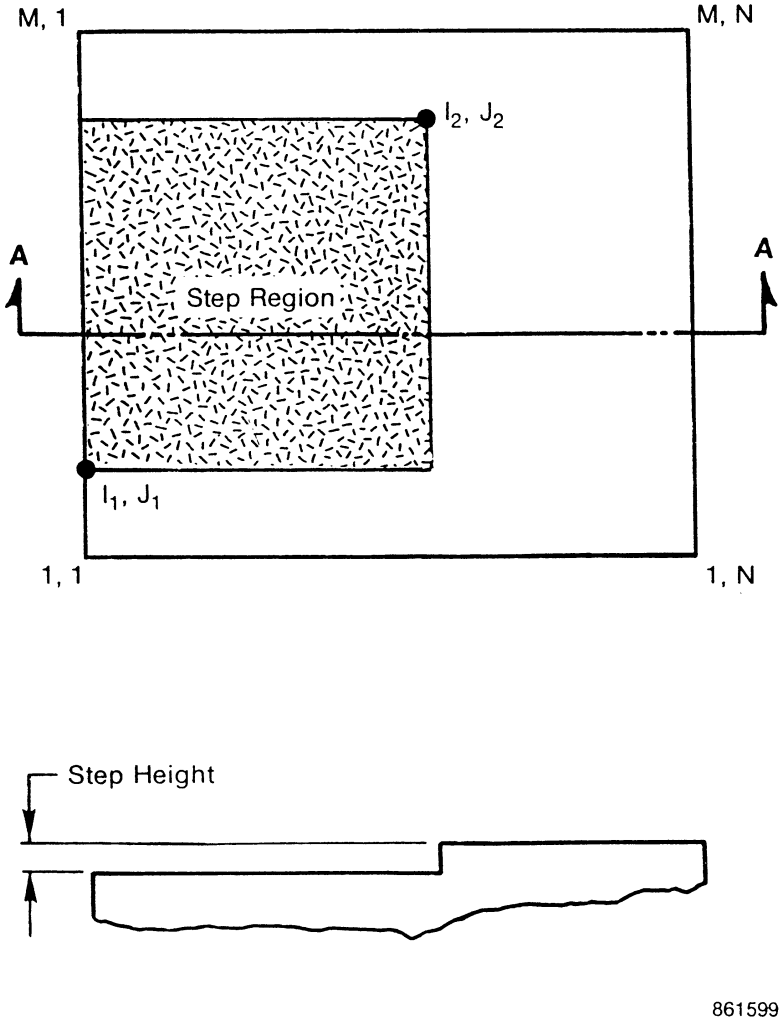

Figure 5-1. Rayleigh-Step Geometry

```
SAMPLE1A
  SAMPLE CASE 1: RAYLEIGH STEP SEAL
*
*--SEAL MODEL
NPAD        4
OPTION      1.
SYMMETRIC
VGRIDM      8
   0.0  0.327  0.640 0.655  0.67  1.079  1.502   1.926
VGRIDN      11
  5. 18. 36. 54. 70. 70.6  71.2   78.0  81.  83.  85.
*
*--GEOMETRY
DIAMETER   1.9685
CLEARANCE  0.001
STEP        1.
      4     1      8     6      .00165
*
*--LUBRICANT PROPERTIES
SPHEAT     1.4
GASCONST   2.5E5
ABSTEMP    530.
VISCOSITY  3.E-9
*
*--OPERATING CONDITIONS
ECC         0.4
ECCANGLE    270.
SPEED      70000.
PO         200.
PLEFT        0.0
PRITE        0.0
PTOP         0.0
PBOT         0.0
END
```

```
GCYL      MTI       SAMPLE CASE 1: RAYLEIGH STEP SEAL


 ECHO OF INPUT

 *
 *--SEAL MODEL
 NPAD      =    4          NUMBER OF PADS
 OPTION    =    1          GIVEN EX, EY FIND LOAD, LOAD ANGLE
 SYMMETRIC                 SYMMETRIC BOUNDARY
 GRIDM     =    8          GRID POINTS IN AXIAL DIRECTION
 VGRIDM                    VARIABLE GRID IN AXIAL DIRECTION
   0.0000E+00  0.3270      0.6400      0.6550      0.6700
    1.079       1.502       1.926
 GRIDN     =   11          GRID POINTS IN CIRCUMFERENTIAL DIRECTION
 VGRIDN                    VARIABLE GRID IN CIRCUMFERENTIAL DIRECTION
    5.000       18.00       36.00       54.00       70.00
    70.60       71.20       78.00       81.00       83.00
    85.00
 *
 *--GEOMETRY
 DIAMETER  =    1.9685     BEARING DIAMETER
 CLEARANCE =  0.001000     BEARING CLEARANCE
 STEP      =   4.   1.     RAYLEIGH STEP AT M, N
              8.   6.
 DEPTH     =.16500E-02
 *
 *--LUBRICANT PROPERTIES
 SPECIFIC  =    1.4000     SPECIFIC HEAT RATIO
 GAS CONST =  250000.0     GAS CONSTANT
 ABS TEMP  =    530.00     ABSOLUTE TEMPERATURE
 VISCOSITY =  0.3000E-08   ABSOLUTE VISCOSITY
 *
 *--OPERATING CONDITIONS
 ECC       =    0.4000     ECCENTRICITY RATIO
 ECCANGLE  =    270.00     ECCENTRICITY ANGLE
 SPEED     =  70000.00     ROTATIONAL SPEED IN RPM
 PO        =    200.00     REFERENCE(AMBIENT)  PRESSURE
 PLEFT     =      0.00     GAGE PRESSURE AT LEFT BOUNDARY
 PRITE     =      0.00     GAGE PRESSURE AT RIGHT BOUNDARY
 PTOP      =      0.00     GAGE PRESSURE AT TOP BOUNDARY
 PBOT      =      0.00     GAGE PRESSURE AT BOTTOM BOUNDARY
 END                       END OF INPUT
```

```
GCYL      MTI       SAMPLE CASE 1: RAYLEIGH STEP SEAL


 GAS JOURNAL BEARING/SEAL


 -BEARING GEOMETRY
  NUMBER OF PADS =    4
          LENGTH =     3.852 IN
        DIAMETER =     1.969 IN
       CLEARANCE =  0.001000 IN
  STARTING ANGLE =      5.00 DEG
       PAD ANGLE =     80.00 DEG

 -SPECIAL FILM THICKNESS SPECIFICATION
 STEP        I,J =   4.   1. UPPER LEFT CORNER
             I,J =   8.   6. LOWER RIGHT CORNER
           DEPTH =  0.001650 IN

 -LUBRICANT PROPERTIES
               VISCOSITY =  0.3000000E-08 LB-S/IN**2
            GAS CONSTANT =   250000.0     IN**2/S**2-R
        ABS. TEMPERATURE =   530.0000     DEG R
     SPECIFIC HEAT RATIO =   1.400000

 -BOUNDARY CONDITIONS
     REFERENCE P =   200.0000     PSI
           PLEFT =  0.0000000E+00 PSI
           PRITE =  0.0000000E+00 PSI
            PTOP =  0.0000000E+00 PSI
            PBOT =  0.0000000E+00 PSI
           SPEED =   70000.00     RPM

 -BEARING MODEL
               M =    8
               N =   11
          JOINED =    F
        SYMMETRY =    T

   Z -
   0.0000E+00  0.3270      0.6400      0.6550      0.6700
    1.079       1.502       1.926

   THETA -
    5.000       18.00       36.00       54.00       70.00
    70.60       71.20       78.00       81.00       83.00
    85.00

 -MAXIMUM NUMBER OF ITERATIONS
    MXIT1 =   10       (FOR COMPRESSIBILITY)
    MXIT2 =    5       (FOR OPTION 2)

 -TOLERANCE
     TOL1 =   0.01000  (FOR COMPRESSIBILITY)
     TOL2 =   0.01000  (FOR OPTION 2)

 -OPTION  =    1       GIVEN SHAFT POSITION  FIND LOAD, LOAD ANGLE


 SPECIFIED PRESSURE
     1 F F F F F F F F
     2 F F F F F F F F
     3 F F F F F F F F
     4 F F F F F F F F
     5 F F F F F F F F
```



```
     6 F F F F F F F F
     7 F F F F F F F F
     8 F F F F F F F F
     9 F F F F F F F F
    10 F F F F F F F F
    11 F F F F F F F F
 PAD #  1  PRESSURE CALCULATION CONVERGED IN  3 ITERATIONS
 PAD #  2  PRESSURE CALCULATION CONVERGED IN  3 ITERATIONS
 PAD #  3  PRESSURE CALCULATION CONVERGED IN  3 ITERATIONS
 PAD #  4  PRESSURE CALCULATION CONVERGED IN  3 ITERATIONS
```

NON-DIM CLEARANCE DISTRIBUTION(H/C) FOR PAD NUMBER 1

I =		1	2	3	4	5	6
AXIAL LENGTH IN.		0.000	0.327	0.640	0.655	0.670	1.079
J	DEG.						
1	5.0	1.03	1.03	1.03	2.68	2.68	2.68
2	18.0	1.12	1.12	1.12	2.77	2.77	2.77
3	36.0	1.24	1.24	1.24	2.89	2.89	2.89
4	54.0	1.32	1.32	1.32	2.97	2.97	2.97
5	70.0	1.38	1.38	1.38	3.03	3.03	3.03
6	70.6	1.38	1.38	1.38	3.03	3.03	3.03
7	71.2	1.38	1.38	1.38	1.38	1.38	1.38
8	78.0	1.39	1.39	1.39	1.39	1.39	1.39
9	81.0	1.40	1.40	1.40	1.40	1.40	1.40
10	83.0	1.40	1.40	1.40	1.40	1.40	1.40
11	85.0	1.40	1.40	1.40	1.40	1.40	1.40

NON-DIM CLEARANCE DISTRIBUTION(H/C) FOR PAD NUMBER 1

I =		7	8
AXIAL LENGTH IN.		1.502	1.926
J	DEG.		
1	5.0	2.68	2.68
2	18.0	2.77	2.77
3	36.0	2.89	2.89
4	54.0	2.97	2.97
5	70.0	3.03	3.03
6	70.6	3.03	3.03
7	71.2	1.38	1.38
8	78.0	1.39	1.39
9	81.0	1.40	1.40
10	83.0	1.40	1.40
11	85.0	1.40	1.40

MIN. CLEAR.= 1.0349 AT 5.0000 DEGREES

MAX. CLEAR.= 3.0273 AT 70.600 DEGREES

PRESSURE DISTRIBUTION (PSI) FOR PAD NUMBER 1

I =	1	2	3	4	5	6
AXIAL LENGTH IN.	0.000	0.327	0.640	0.655	0.670	1.079
J DEG.						
1 5.0	0.000E+00	0.000E+00	0.000E+00	0.000E+00	0.000E+00	0.000E+00
2 18.0	0.000E+00	-1.14	2.03	2.34	2.37	3.02
3 36.0	0.000E+00	1.11	7.00	7.41	7.46	8.78
4 54.0	0.000E+00	4.35	13.5	14.1	14.2	16.4
5 70.0	0.000E+00	5.46	19.3	20.8	21.1	25.0
6 70.6	0.000E+00	5.36	18.9	20.9	21.4	25.4
7 71.2	0.000E+00	5.25	18.3	19.4	20.3	24.4
8 78.0	0.000E+00	3.06	9.78	10.1	10.4	13.1
9 81.0	0.000E+00	1.83	5.72	5.88	6.03	7.67
10 83.0	0.000E+00	0.938	2.91	2.99	3.06	3.91
11 85.0	0.000E+00	0.000E+00	0.000E+00	0.000E+00	0.000E+00	0.000E+00

PRESSURE DISTRIBUTION (PSI) FOR PAD NUMBER 1

I =	7	8
AXIAL LENGTH IN.	1.502	1.926
J DEG.		
1 5.0	0.000E+00	0.000E+00
2 18.0	3.38	3.50
3 36.0	9.59	9.86
4 54.0	17.7	18.1
5 70.0	26.7	27.1
6 70.6	27.0	27.5
7 71.2	26.0	26.5
8 78.0	14.0	14.2
9 81.0	8.23	8.38
10 83.0	4.20	4.28
11 85.0	0.000E+00	0.000E+00

MIN. PRESS= -1.1384 AT 18.000 DEGREES

MAX. PRESS= 27.496 AT 70.600 DEGREES

NON-DIM CLEARANCE DISTRIBUTION(H/C) FOR PAD NUMBER 2

I =		1	2	3	4	5	6
AXIAL LENGTH IN.		0.000	0.327	0.640	0.655	0.670	1.079
J	DEG.						
1	95.0	1.40	1.40	1.40	3.05	3.05	3.05
2	108.0	1.38	1.38	1.38	3.03	3.03	3.03
3	126.0	1.32	1.32	1.32	2.97	2.97	2.97
4	144.0	1.24	1.24	1.24	2.89	2.89	2.89
5	160.0	1.14	1.14	1.14	2.79	2.79	2.79
6	160.6	1.13	1.13	1.13	2.78	2.78	2.78
7	161.2	1.13	1.13	1.13	1.13	1.13	1.13
8	168.0	1.08	1.08	1.08	1.08	1.08	1.08
9	171.0	1.06	1.06	1.06	1.06	1.06	1.06
10	173.0	1.05	1.05	1.05	1.05	1.05	1.05
11	175.0	1.03	1.03	1.03	1.03	1.03	1.03

NON-DIM CLEARANCE DISTRIBUTION(H/C) FOR PAD NUMBER 2

I =		7	8
AXIAL LENGTH IN.		1.502	1.926
J	DEG.		
1	95.0	3.05	3.05
2	108.0	3.03	3.03
3	126.0	2.97	2.97
4	144.0	2.89	2.89
5	160.0	2.79	2.79
6	160.6	2.78	2.78
7	161.2	1.13	1.13
8	168.0	1.08	1.08
9	171.0	1.06	1.06
10	173.0	1.05	1.05
11	175.0	1.03	1.03

MIN. CLEAR.= 1.0349 AT 175.00 DEGREES

MAX. CLEAR.= 3.0485 AT 95.000 DEGREES

PRESSURE DISTRIBUTION (PSI) FOR PAD NUMBER 2

I =	1	2	3	4	5	6
AXIAL LENGTH IN.	0.000	0.327	0.640	0.655	0.670	1.079
J DEG.						
1 95.0	0.000E+00	0.000E+00	0.000E+00	0.000E+00	0.000E+00	0.000E+00
2 108.0	0.000E+00	3.40	6.09	6.23	6.25	6.70
3 126.0	0.000E+00	8.71	15.6	15.9	16.0	17.1
4 144.0	0.000E+00	14.1	26.3	26.9	27.0	29.1
5 160.0	0.000E+00	15.5	35.6	37.5	37.7	41.8
6 160.6	0.000E+00	15.3	35.0	37.7	38.2	42.3
7 161.2	0.000E+00	15.0	34.3	35.7	36.9	41.2
8 168.0	0.000E+00	9.80	20.8	21.3	21.7	25.0
9 171.0	0.000E+00	6.24	13.0	13.2	13.4	15.6
10 173.0	0.000E+00	3.36	6.89	7.00	7.12	8.27
11 175.0	0.000E+00	0.000E+00	0.000E+00	0.000E+00	0.000E+00	0.000E+00

PRESSURE DISTRIBUTION (PSI) FOR PAD NUMBER 2

I =	7	8
AXIAL LENGTH IN.	1.502	1.926
J DEG.		
1 95.0	0.000E+00	0.000E+00
2 108.0	6.98	7.07
3 126.0	17.8	18.0
4 144.0	30.3	30.7
5 160.0	43.5	44.0
6 160.6	44.0	44.5
7 161.2	42.8	43.3
8 168.0	26.1	26.4
9 171.0	16.2	16.4
10 173.0	8.63	8.72
11 175.0	0.000E+00	0.000E+00

MIN. PRESS= 0.00000E+00 AT 175.00 DEGREES

MAX. PRESS= 44.490 AT 160.60 DEGREES

NON-DIM CLEARANCE DISTRIBUTION(H/C) FOR PAD NUMBER 3

I =	1	2	3	4	5	6
AXIAL LENGTH IN.	0.000	0.327	0.640	0.655	0.670	1.079
J DEG.						
1 185.0	0.965	0.965	0.965	2.62	2.62	2.62
2 198.0	0.876	0.876	0.876	2.53	2.53	2.53
3 216.0	0.765	0.765	0.765	2.41	2.41	2.41
4 234.0	0.676	0.676	0.676	2.33	2.33	2.33
5 250.0	0.624	0.624	0.624	2.27	2.27	2.27
6 250.6	0.623	0.623	0.623	2.27	2.27	2.27
7 251.2	0.621	0.621	0.621	0.621	0.621	0.621
8 258.0	0.609	0.609	0.609	0.609	0.609	0.609
9 261.0	0.605	0.605	0.605	0.605	0.605	0.605
10 263.0	0.603	0.603	0.603	0.603	0.603	0.603
11 265.0	0.602	0.602	0.602	0.602	0.602	0.602

NON-DIM CLEARANCE DISTRIBUTION(H/C) FOR PAD NUMBER 3

I =	7	8
AXIAL LENGTH IN.	1.502	1.926
J DEG.		
1 185.0	2.62	2.62
2 198.0	2.53	2.53
3 216.0	2.41	2.41
4 234.0	2.33	2.33
5 250.0	2.27	2.27
6 250.6	2.27	2.27
7 251.2	0.621	0.621
8 258.0	0.609	0.609
9 261.0	0.605	0.605
10 263.0	0.603	0.603
11 265.0	0.602	0.602

MIN. CLEAR.= 0.60152 AT 265.00 DEGREES

MAX. CLEAR.= 2.6151 AT 185.00 DEGREES

PRESSURE DISTRIBUTION (PSI) FOR PAD NUMBER 3

I =	1	2	3	4	5	6
AXIAL LENGTH IN.	0.000	0.327	0.640	0.655	0.670	1.079
J DEG.						
1 185.0	0.000E+00	0.000E+00	0.000E+00	0.000E+00	0.000E+00	0.000E+00
2 198.0	0.000E+00	9.22	13.0	13.1	13.1	13.4
3 216.0	0.000E+00	21.2	33.4	33.9	33.9	34.8
4 234.0	0.000E+00	32.5	57.3	58.5	58.5	60.4
5 250.0	0.000E+00	35.2	79.5	83.7	83.9	87.7
6 250.6	0.000E+00	34.7	78.4	84.4	85.0	88.8
7 251.2	0.000E+00	34.2	77.0	80.0	82.4	86.8
8 258.0	0.000E+00	22.6	48.7	49.7	50.7	55.4
9 261.0	0.000E+00	14.5	31.1	31.7	32.2	35.4
10 263.0	0.000E+00	7.86	16.9	17.1	17.4	19.2
11 265.0	0.000E+00	0.000E+00	0.000E+00	0.000E+00	0.000E+00	0.000E+00

PRESSURE DISTRIBUTION (PSI) FOR PAD NUMBER 3

I =	7	8
AXIAL LENGTH IN.	1.502	1.926
J DEG.		
1 185.0	0.000E+00	0.000E+00
2 198.0	13.6	13.7
3 216.0	35.4	35.6
4 234.0	61.6	61.9
5 250.0	89.3	89.8
6 250.6	90.5	90.9
7 251.2	88.4	88.9
8 258.0	56.5	56.8
9 261.0	36.2	36.4
10 263.0	19.7	19.8
11 265.0	0.000E+00	0.000E+00

MIN. PRESS= 0.00000E+00 AT 265.00 DEGREES

MAX. PRESS= 90.918 AT 250.60 DEGREES

NON-DIM CLEARANCE DISTRIBUTION(H/C) FOR PAD NUMBER 4

I =		1	2	3	4	5	6
AXIAL LENGTH IN.		0.000	0.327	0.640	0.655	0.670	1.079
J	DEG.						
1	275.0	0.602	0.602	0.602	2.25	2.25	2.25
2	288.0	0.620	0.620	0.620	2.27	2.27	2.27
3	306.0	0.676	0.676	0.676	2.33	2.33	2.33
4	324.0	0.765	0.765	0.765	2.41	2.41	2.41
5	340.0	0.863	0.863	0.863	2.51	2.51	2.51
6	340.6	0.867	0.867	0.867	2.52	2.52	2.52
7	341.2	0.871	0.871	0.871	0.871	0.871	0.871
8	348.0	0.917	0.917	0.917	0.917	0.917	0.917
9	351.0	0.937	0.937	0.937	0.937	0.937	0.937
10	353.0	0.951	0.951	0.951	0.951	0.951	0.951
11	355.0	0.965	0.965	0.965	0.965	0.965	0.965

NON-DIM CLEARANCE DISTRIBUTION(H/C) FOR PAD NUMBER 4

I =		7	8
AXIAL LENGTH IN.		1.502	1.926
J	DEG.		
1	275.0	2.25	2.25
2	288.0	2.27	2.27
3	306.0	2.33	2.33
4	324.0	2.41	2.41
5	340.0	2.51	2.51
6	340.6	2.52	2.52
7	341.2	0.871	0.871
8	348.0	0.917	0.917
9	351.0	0.937	0.937
10	353.0	0.951	0.951
11	355.0	0.965	0.965

MIN. CLEAR.= 0.60152 AT 275.00 DEGREES

MAX. CLEAR.= 2.5171 AT 340.60 DEGREES

PRESSURE DISTRIBUTION (PSI) FOR PAD NUMBER 4

I =	1	2	3	4	5	6
AXIAL LENGTH IN.	0.000	0.327	0.640	0.655	0.670	1.079
J DEG.						
1 275.0	0.000E+00	0.000E+00	0.000E+00	0.000E+00	0.000E+00	0.000E+00
2 288.0	0.000E+00	-1.33	5.68	6.40	6.43	7.10
3 306.0	0.000E+00	0.318	16.1	17.4	17.4	19.1
4 324.0	0.000E+00	5.09	29.3	31.0	31.1	34.1
5 340.0	0.000E+00	7.22	40.9	45.0	45.3	50.6
6 340.6	0.000E+00	7.09	39.9	45.2	45.9	51.3
7 341.2	0.000E+00	6.95	38.7	41.2	43.3	49.2
8 348.0	0.000E+00	3.54	19.6	20.3	21.0	25.4
9 351.0	0.000E+00	1.93	11.2	11.6	11.9	14.7
10 353.0	0.000E+00	0.912	5.63	5.79	5.95	7.40
11 355.0	0.000E+00	0.000E+00	0.000E+00	0.000E+00	0.000E+00	0.000E+00

PRESSURE DISTRIBUTION (PSI) FOR PAD NUMBER 4

I =	7	8
AXIAL LENGTH IN.	1.502	1.926
J DEG.		
1 275.0	0.000E+00	0.000E+00
2 288.0	7.51	7.64
3 306.0	20.1	20.4
4 324.0	35.9	36.4
5 340.0	53.0	53.6
6 340.6	53.7	54.3
7 341.2	51.5	52.1
8 348.0	26.7	27.1
9 351.0	15.5	15.7
10 353.0	7.82	7.93
11 355.0	0.000E+00	0.000E+00

MIN. PRESS= -1.3335 AT 288.00 DEGREES

MAX. PRESS= 54.325 AT 340.60 DEGREES

```
GCYL      MTI       SAMPLE CASE 1: RAYLEIGH STEP SEAL


 -JOURNAL & LOAD POSITION
   ECCENTRICITY           =     0.40000
   ECCENTRICITY ANGLE     =      -90.00 DEG
   MINIMUM FILM           =   0.0006015 IN
   LOAD                   =   131.5     LB
   LOAD ANGLE             =       58.49 DEG

   POWER LOSS             =   2.308     HP

   LEAKAGE AT I = 1       =-0.10191E-02 LB/S
```



```
GCYL      MTI       SAMPLE CASE 1: RAYLEIGH STEP SEAL


 ECHO OF INPUT

NO MORE INPUT, PROGRAM TERMINATED
```

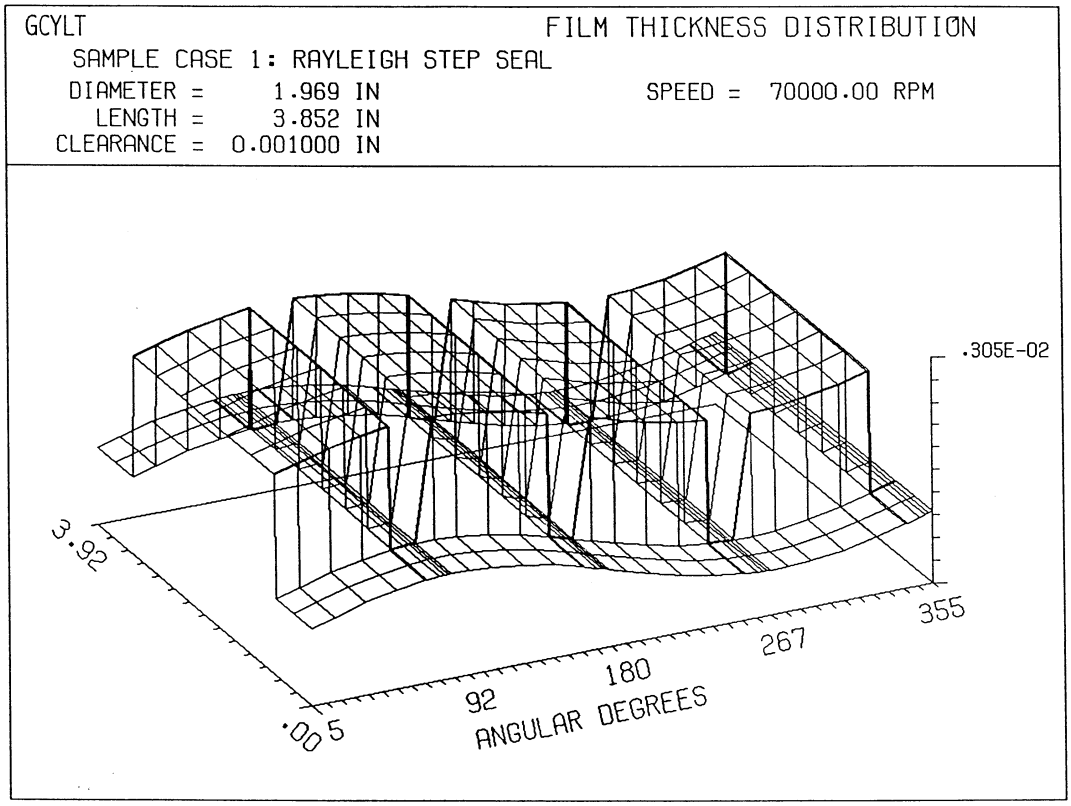

94TM10

Figure 5-2. Rayleigh-Step Seal Clearance Distribution

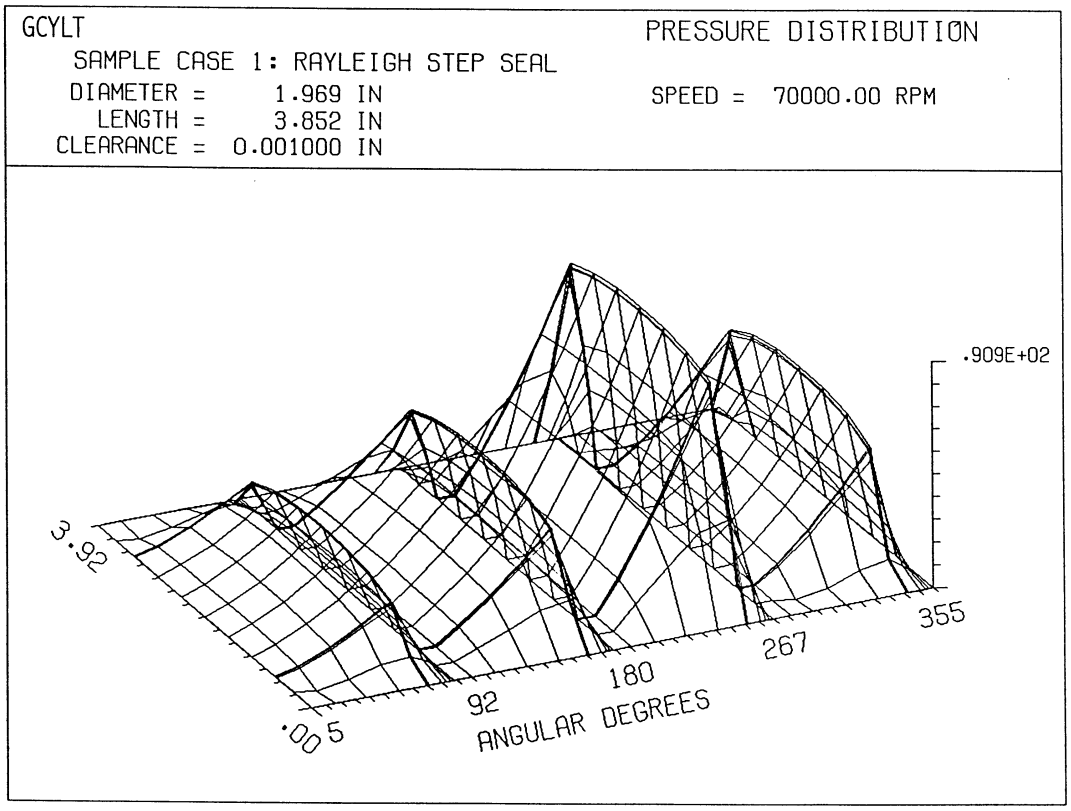

94TM10

Figure 5-3. Rayleigh-Step Seal Pressure Distribution

5.2 Sample Problem 2 - Nongrooved Lobe Seal

The nongrooved lobe seal is characterized by offset lobes that are joined at their appexes in a continuous fashion as opposed to a lobe seal where the lobes are separated by axial grooves. Such a seal is depicted on Figure 5-4; it would be manufactured by a broaching process. To analyze this type of seal with the GCYLT code, the key word SECTOR must be invoked, followed by the number of sectors, and the lobe preload and preload position within the lobe (see Figure 2-6 for definition of preload). For this example, a lobe hydrodynamic geometry was combined with external pressurization through source points at the mid-plane of the seal. The geometry and operating conditions are as follows:

- Seal Diameter = 2.25 in.
- Seal Length = 1.625 in.
- Seal reference clearance (the clearance prior to preload) = 0.0005 in.
- Number of pads = 1. A sectored seal is always considered as a continuous seal although discontinuities exist in the clearance distribution. Thus, the number of pads is always unity and the JOINED option is always applied.
- Preload on each lobe is 0.5, which means at the pivot position the lobe is eccentric toward the shaft by a distance of one-half of the reference clearance (see Figure 2-6)
- Pivot angle of the first sector is 150° from the x axis, and since the first lobe is 90° from the x axis, the pivot position is located at the mid-angle of each lobe
- Viscosity of the gas = 3×10^{-9} lb-s/in^2.
- Gas constant = 2.5×10^5 in^2/(s^2-°R)
- Ambient temperature = 510°R
- Total number of orifices = 27, 9 in each sector, located at the mid-plane of each sector; 1 orifice is located at each interior grid point at the mid-plane of the bearing
- Orifice diameter = 0.015 in.
- Coefficient of discharge of each orifice = 0.9
- Supply pressure to the source orifices = 120 psig
- Operating speed = 70,000 rpm
- Reference pressure = 14.7 psig
- Pressure along the boundaries = 0 psig.

The input and output for this case is shown on the following pages. The case is identified as SAMPLE2D on the sample problem diskette provided to NASA. Notice that the input incorporates the FILE parameter, which means that a previous pressure distribution was read as the initial pressure distribution for this case. Convergence of the pressure is often difficult when solving source problems, whether they be inherently compensated sources or spot recesses. Convergence difficulties occur because pressure spikes occur at source locations and pressure gradients become very large. There are two methods for handling these problems which can be applied independently or jointly. The first is to use variable-grid and fine-grid spacing around the orifice holes. Each grid line around the hole should be at a distance of one to two orifice diameters in both the axial and circumferential direction. The other mechanism is to start the

problem at low eccentricity and use the pressure distribution as an initial guess to get to the next eccentricity. Continue the process until the desired eccentricity is attained. To use a prior pressure distribution as a starting point, copy the file with the extension .HP to the name of the file being evaluated. For example, if the pressure from FILE1 are to be used as an initial distribution for FILE2, then prior to running FILE2, copy FILE1.HP to FILE2.HP and then run GCYLT FILE2. For this particular problem, variable grid was not used but the FILE option was employed through a range of eccentricity ratios of 0,.1,.2,.3,.4,.5. For OS/2 operation, a .CMD file can be set up to automatically accomplish the eccentricity increases.

Following the input is the output from the problem and the clearance and pressure plots shown on Figures 5-5 and 5-6. Notice the discontinuities in the clearance distribution because of the lobed geometry. The proximity of the source points to each other makes the pressure distribution appear as a line source.

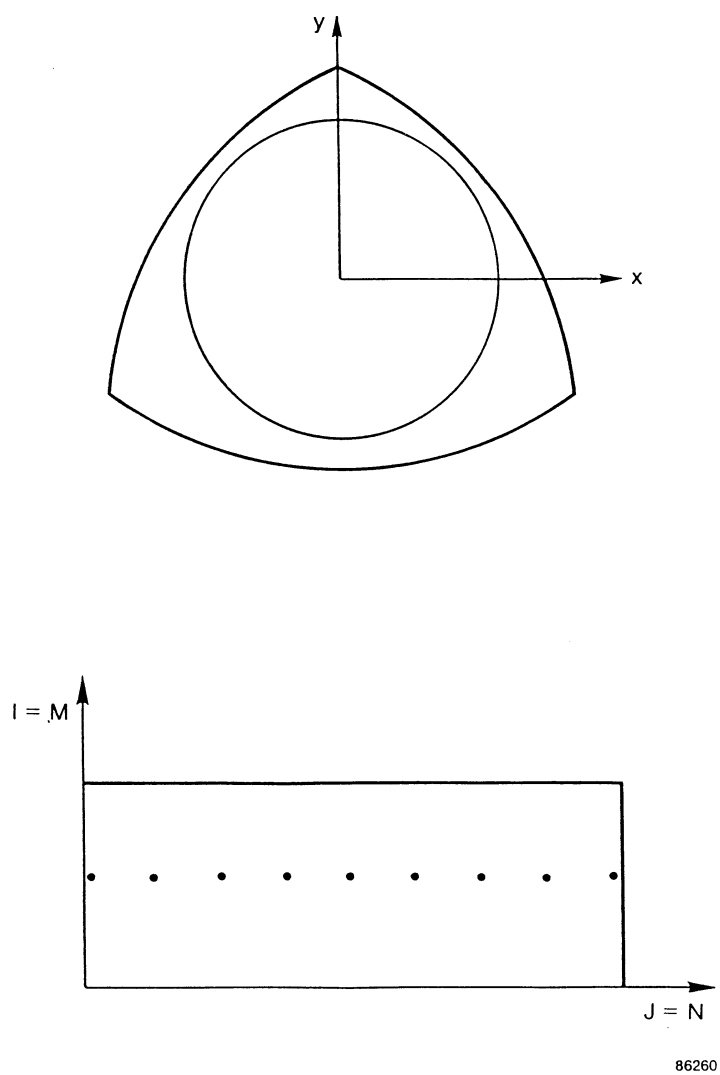

Figure 5-4. Sectored Lobe Seal

```
SAMPLE2D
 SAMPLE CASE 2:   SECTORED SEAL
*
NPAD        1
OPTION      1
JOINED
START       90.
PADANGLE    360.
SECTOR      3.
PRELOAD     0.5
PIVOT       150.
GRIDM      21
GRIDN      31
*
LENGTH     1.625
DIAMETER   2.25
CLEARANCE  0.0005
SPHEAT      1.4
GASCONST    2.5E5
ABSTEMP     510.
VISCOSITY   3.E-9
SPEED       70000.
ECC         0.0
ECCANGLE    90.
ITERATION   15    5
*
*
PO          14.7
PTOP         0.
PBOT         0.
PLEFT        0.
PRITE        0.
*
*
CD          0.9
DO          0.015
SOURCE      27
            11 2
            11 3
            11 4
            11 5
            11 6
            11 7
            11 8
            11 9
            11 10
            11 12
            11 13
            11 14
            11 15
            11 16
            11 17
            11 18
            11 19
            11 20
            11 22
            11 23
            11 24
            11 25
            11 26
            11 27
            11 28
            11 29
            11 30
PS          120.
FILE
```



```
END
```

```
GCYL      MTI      SAMPLE CASE 2:   SECTORED SEAL


 ECHO OF INPUT

 *
 NPAD       =    1          NUMBER OF PADS
 OPTION     =    1          GIVEN EX, EY FIND LOAD, LOAD ANGLE
 JOINED                     JOINED BOUNDARY
 START      =     90.00     STARTING ANGLE OF PAD # 1
 PAD ANGLE  =    360.00          PAD ANGLE OF PAD # 1
 NSEC       =        3.     SECTORED SEAL NO. OF SECTORS
 PRELOAD    =    0.5000     PRELOAD
 PIVOT ANG  =    150.00     PRELOAD PIVOT ANGLE
 GRIDM      =   21          GRID POINTS IN AXIAL DIRECTION
 GRIDN      =   31          GRID POINTS IN CIRCUMFERENTIAL DIRECTION
 *
 LENGTH     =    1.6250     BEARING LENTH
 DIAMETER   =    2.2500     BEARING DIAMETER
 CLEARANCE  =  0.000500     BEARING CLEARANCE
 SPECIFIC   =    1.4000     SPECIFIC HEAT RATIO
 GAS CONST  =  250000.0     GAS CONSTANT
 ABS TEMP   =    510.00     ABSOLUTE TEMPERATURE
 VISCOSITY  =  0.3000E-08   ABSOLUTE VISCOSITY
 SPEED      =  70000.00     ROTATIONAL SPEED IN RPM
 ECC        =    0.0000     ECCENTRICITY RATIO
 ECCANGLE   =     90.00     ECCENTRICITY ANGLE
 MXIT1      =  15.          (FOR COMPRESSIBILITY)
 MXIT2      =   5.          (FOR OPTION 2)
 *
 *
 PO         =     14.70     REFERENCE(AMBIENT)  PRESSURE
 PTOP       =      0.00     GAGE PRESSURE AT TOP BOUNDARY
 PBOT       =      0.00     GAGE PRESSURE AT BOTTOM BOUNDARY
 PLEFT      =      0.00     GAGE PRESSURE AT LEFT BOUNDARY
 PRITE      =      0.00     GAGE PRESSURE AT RIGHT BOUNDARY
 *
 *
 CD         =    0.9000     DISCHARGE COEFFICIENT
 DO         =    0.0150     ORIFICE DIAMETER
 INHERENTLY COMPENSATED ORIFICES
 NUMBER OF SOURCES =  27
 SPECIFIED SOURCE AT I =  11  J =   2
 SPECIFIED SOURCE AT I =  11  J =   3
 SPECIFIED SOURCE AT I =  11  J =   4
 SPECIFIED SOURCE AT I =  11  J =   5
 SPECIFIED SOURCE AT I =  11  J =   6
 SPECIFIED SOURCE AT I =  11  J =   7
 SPECIFIED SOURCE AT I =  11  J =   8
 SPECIFIED SOURCE AT I =  11  J =   9
 SPECIFIED SOURCE AT I =  11  J =  10
 SPECIFIED SOURCE AT I =  11  J =  12
 SPECIFIED SOURCE AT I =  11  J =  13
 SPECIFIED SOURCE AT I =  11  J =  14
 SPECIFIED SOURCE AT I =  11  J =  15
 SPECIFIED SOURCE AT I =  11  J =  16
 SPECIFIED SOURCE AT I =  11  J =  17
 SPECIFIED SOURCE AT I =  11  J =  18
 SPECIFIED SOURCE AT I =  11  J =  19
 SPECIFIED SOURCE AT I =  11  J =  20
 SPECIFIED SOURCE AT I =  11  J =  22
 SPECIFIED SOURCE AT I =  11  J =  23
 SPECIFIED SOURCE AT I =  11  J =  24
 SPECIFIED SOURCE AT I =  11  J =  25
 SPECIFIED SOURCE AT I =  11  J =  26
```

```
SPECIFIED SOURCE AT I =  11  J =  27
SPECIFIED SOURCE AT I =  11  J =  28
SPECIFIED SOURCE AT I =  11  J =  29
SPECIFIED SOURCE AT I =  11  J =  30
PS        =    120.00     SUPPLY PRESSURE(ORIFICE)
FILE                      INITIAL PRESSURE FROM PREVIOUS RUN
END                       END OF INPUT
```



```
GCYL      MTI      SAMPLE CASE 2:   SECTORED SEAL


 GAS JOURNAL BEARING/SEAL


 -BEARING GEOMETRY
  NUMBER OF PADS =    1
          LENGTH =     1.625 IN
        DIAMETER =     2.250 IN
       CLEARANCE =  0.000500 IN
  STARTING ANGLE =     90.00 DEG
       PAD ANGLE =    360.00 DEG

 -SPECIAL FILM THICKNESS SPECIFICATION
         PRELOAD =    0.5000
     PIVOT ANGLE =    150.00 DEG

 -LUBRICANT PROPERTIES
              VISCOSITY =  0.3000000E-08 LB-S/IN**2
           GAS CONSTANT =   250000.0     IN**2/S**2-R
       ABS. TEMPERATURE =   510.0000     DEG R
     SPECIFIC HEAT RATIO =   1.400000

 -ORIFICE RELATED PROPERTIES
  ORIFICE
      NUMBER OF ORIFICES =        27
                DIAMETER =  0.1500000E-01 IN
          DISCHARGE COEF =  0.9000000
         SUPPLY PRESSURE =   120.0000     PSI
***INHERENTLY COMPENSATED

 -BOUNDARY CONDITIONS
     REFERENCE P =   14.70000     PSI
           PLEFT =  0.0000000E+00 PSI
           PRITE =  0.0000000E+00 PSI
            PTOP =  0.0000000E+00 PSI
            PBOT =  0.0000000E+00 PSI
           SPEED =   70000.00     RPM

 -BEARING MODEL
               M =   21
               N =   31
          JOINED =    T
        SYMMETRY =    F

   Z -
   0.0000E+00  0.8125E-01  0.1625      0.2437      0.3250
   0.4062      0.4875      0.5687      0.6500      0.7313
   0.8125      0.8938      0.9750       1.056       1.138
    1.219       1.300       1.381       1.463       1.544
    1.625

   THETA -
    90.00       102.0       114.0       126.0       138.0
    150.0       162.0       174.0       186.0       198.0
    210.0       222.0       234.0       246.0       258.0
    270.0       282.0       294.0       306.0       318.0
    330.0       342.0       354.0       366.0       378.0
    390.0       402.0       414.0       426.0       438.0
    450.0

 -MAXIMUM NUMBER OF ITERATIONS
    MXIT1 =   15       (FOR COMPRESSIBILITY)
    MXIT2 =    5       (FOR OPTION 2)
```

```
-TOLERANCE
    TOL1 =   0.01000  (FOR COMPRESSIBILITY)
    TOL2 =   0.01000  (FOR OPTION 2)

-OPTION  =    1       GIVEN SHAFT POSITION  FIND LOAD, LOAD ANGLE


SPECIFIED PRESSURE
    1 F F F F F F F F F F F F F F F F F F F F F
    2 F F F F F F F F F F F F F F F F F F F F F
    3 F F F F F F F F F F F F F F F F F F F F F
    4 F F F F F F F F F F F F F F F F F F F F F
    5 F F F F F F F F F F F F F F F F F F F F F
    6 F F F F F F F F F F F F F F F F F F F F F
    7 F F F F F F F F F F F F F F F F F F F F F
    8 F F F F F F F F F F F F F F F F F F F F F
    9 F F F F F F F F F F F F F F F F F F F F F
   10 F F F F F F F F F F F F F F F F F F F F F
   11 F F F F F F F F F F F F F F F F F F F F F
   12 F F F F F F F F F F F F F F F F F F F F F
   13 F F F F F F F F F F F F F F F F F F F F F
   14 F F F F F F F F F F F F F F F F F F F F F
   15 F F F F F F F F F F F F F F F F F F F F F
   16 F F F F F F F F F F F F F F F F F F F F F
   17 F F F F F F F F F F F F F F F F F F F F F
   18 F F F F F F F F F F F F F F F F F F F F F
   19 F F F F F F F F F F F F F F F F F F F F F
   20 F F F F F F F F F F F F F F F F F F F F F
   21 F F F F F F F F F F F F F F F F F F F F F
   22 F F F F F F F F F F F F F F F F F F F F F
   23 F F F F F F F F F F F F F F F F F F F F F
   24 F F F F F F F F F F F F F F F F F F F F F
   25 F F F F F F F F F F F F F F F F F F F F F
   26 F F F F F F F F F F F F F F F F F F F F F
   27 F F F F F F F F F F F F F F F F F F F F F
   28 F F F F F F F F F F F F F F F F F F F F F
   29 F F F F F F F F F F F F F F F F F F F F F
   30 F F F F F F F F F F F F F F F F F F F F F
   31 F F F F F F F F F F F F F F F F F F F F F
```



```
GCYL      MTI      SAMPLE CASE 2:   SECTORED SEAL


SPECIFIED SOURCE
    1 F F F F F F F F F F F F F F F F F F F F F
    2 F F F F F F F F F F T F F F F F F F F F F
    3 F F F F F F F F F F T F F F F F F F F F F
    4 F F F F F F F F F F T F F F F F F F F F F
    5 F F F F F F F F F F T F F F F F F F F F F
    6 F F F F F F F F F F T F F F F F F F F F F
    7 F F F F F F F F F F T F F F F F F F F F F
    8 F F F F F F F F F F T F F F F F F F F F F
    9 F F F F F F F F F F T F F F F F F F F F F
   10 F F F F F F F F F F T F F F F F F F F F F
   11 F F F F F F F F F F F F F F F F F F F F F
   12 F F F F F F F F F F T F F F F F F F F F F
   13 F F F F F F F F F F T F F F F F F F F F F
   14 F F F F F F F F F F T F F F F F F F F F F
   15 F F F F F F F F F F T F F F F F F F F F F
   16 F F F F F F F F F F T F F F F F F F F F F
   17 F F F F F F F F F F T F F F F F F F F F F
   18 F F F F F F F F F F T F F F F F F F F F F
   19 F F F F F F F F F F T F F F F F F F F F F
   20 F F F F F F F F F F T F F F F F F F F F F
   21 F F F F F F F F F F F F F F F F F F F F F
   22 F F F F F F F F F F T F F F F F F F F F F
   23 F F F F F F F F F F T F F F F F F F F F F
   24 F F F F F F F F F F T F F F F F F F F F F
   25 F F F F F F F F F F T F F F F F F F F F F
   26 F F F F F F F F F F T F F F F F F F F F F
   27 F F F F F F F F F F T F F F F F F F F F F
   28 F F F F F F F F F F T F F F F F F F F F F
   29 F F F F F F F F F F T F F F F F F F F F F
   30 F F F F F F F F F F T F F F F F F F F F F
   31 F F F F F F F F F F F F F F F F F F F F F
PAD #  1  PRESSURE CALCULATION CONVERGED IN  1 ITERATIONS
```

NON-DIM CLEARANCE DISTRIBUTION(H/C) FOR PAD NUMBER 1

	I =	1	2	3	4	5	6
	AXIAL LENGTH IN.	0.000	0.081	0.162	0.244	0.325	0.406
J	DEG.						
1	90.0	0.750	0.750	0.750	0.750	0.750	0.750
2	102.0	0.665	0.665	0.665	0.665	0.665	0.665
3	114.0	0.595	0.595	0.595	0.595	0.595	0.595
4	126.0	0.543	0.543	0.543	0.543	0.543	0.543
5	138.0	0.511	0.511	0.511	0.511	0.511	0.511
6	150.0	0.500	0.500	0.500	0.500	0.500	0.500
7	162.0	0.511	0.511	0.511	0.511	0.511	0.511
8	174.0	0.543	0.543	0.543	0.543	0.543	0.543
9	186.0	0.595	0.595	0.595	0.595	0.595	0.595
10	198.0	0.665	0.665	0.665	0.665	0.665	0.665
11	210.0	0.750	0.750	0.750	0.750	0.750	0.750
12	222.0	0.665	0.665	0.665	0.665	0.665	0.665
13	234.0	0.595	0.595	0.595	0.595	0.595	0.595
14	246.0	0.543	0.543	0.543	0.543	0.543	0.543
15	258.0	0.511	0.511	0.511	0.511	0.511	0.511
16	270.0	0.500	0.500	0.500	0.500	0.500	0.500
17	282.0	0.511	0.511	0.511	0.511	0.511	0.511
18	294.0	0.543	0.543	0.543	0.543	0.543	0.543
19	306.0	0.595	0.595	0.595	0.595	0.595	0.595
20	318.0	0.665	0.665	0.665	0.665	0.665	0.665
21	330.0	0.750	0.750	0.750	0.750	0.750	0.750
22	342.0	0.665	0.665	0.665	0.665	0.665	0.665
23	354.0	0.595	0.595	0.595	0.595	0.595	0.595
24	366.0	0.543	0.543	0.543	0.543	0.543	0.543
25	378.0	0.511	0.511	0.511	0.511	0.511	0.511
26	390.0	0.500	0.500	0.500	0.500	0.500	0.500
27	402.0	0.511	0.511	0.511	0.511	0.511	0.511
28	414.0	0.543	0.543	0.543	0.543	0.543	0.543
29	426.0	0.595	0.595	0.595	0.595	0.595	0.595
30	438.0	0.665	0.665	0.665	0.665	0.665	0.665
31	450.0	0.750	0.750	0.750	0.750	0.750	0.750

NON-DIM CLEARANCE DISTRIBUTION(H/C) FOR PAD NUMBER 1

	I =	7	8	9	10	11	12
	AXIAL LENGTH IN.	0.487	0.569	0.650	0.731	0.813	0.894
J	DEG.						
1	90.0	0.750	0.750	0.750	0.750	0.750	0.750
2	102.0	0.665	0.665	0.665	0.665	0.665	0.665
3	114.0	0.595	0.595	0.595	0.595	0.595	0.595
4	126.0	0.543	0.543	0.543	0.543	0.543	0.543
5	138.0	0.511	0.511	0.511	0.511	0.511	0.511
6	150.0	0.500	0.500	0.500	0.500	0.500	0.500
7	162.0	0.511	0.511	0.511	0.511	0.511	0.511
8	174.0	0.543	0.543	0.543	0.543	0.543	0.543
9	186.0	0.595	0.595	0.595	0.595	0.595	0.595
10	198.0	0.665	0.665	0.665	0.665	0.665	0.665
11	210.0	0.750	0.750	0.750	0.750	0.750	0.750
12	222.0	0.665	0.665	0.665	0.665	0.665	0.665
13	234.0	0.595	0.595	0.595	0.595	0.595	0.595
14	246.0	0.543	0.543	0.543	0.543	0.543	0.543
15	258.0	0.511	0.511	0.511	0.511	0.511	0.511
16	270.0	0.500	0.500	0.500	0.500	0.500	0.500
17	282.0	0.511	0.511	0.511	0.511	0.511	0.511
18	294.0	0.543	0.543	0.543	0.543	0.543	0.543
19	306.0	0.595	0.595	0.595	0.595	0.595	0.595
20	318.0	0.665	0.665	0.665	0.665	0.665	0.665
21	330.0	0.750	0.750	0.750	0.750	0.750	0.750
22	342.0	0.665	0.665	0.665	0.665	0.665	0.665
23	354.0	0.595	0.595	0.595	0.595	0.595	0.595
24	366.0	0.543	0.543	0.543	0.543	0.543	0.543
25	378.0	0.511	0.511	0.511	0.511	0.511	0.511
26	390.0	0.500	0.500	0.500	0.500	0.500	0.500
27	402.0	0.511	0.511	0.511	0.511	0.511	0.511
28	414.0	0.543	0.543	0.543	0.543	0.543	0.543
29	426.0	0.595	0.595	0.595	0.595	0.595	0.595
30	438.0	0.665	0.665	0.665	0.665	0.665	0.665
31	450.0	0.750	0.750	0.750	0.750	0.750	0.750

NON-DIM CLEARANCE DISTRIBUTION(H/C) FOR PAD NUMBER 1

	I = 13	14	15	16	17	18
AXIAL LENGTH IN.	0.975	1.056	1.138	1.219	1.300	1.381
J DEG.						
1 90.0	0.750	0.750	0.750	0.750	0.750	0.750
2 102.0	0.665	0.665	0.665	0.665	0.665	0.665
3 114.0	0.595	0.595	0.595	0.595	0.595	0.595
4 126.0	0.543	0.543	0.543	0.543	0.543	0.543
5 138.0	0.511	0.511	0.511	0.511	0.511	0.511
6 150.0	0.500	0.500	0.500	0.500	0.500	0.500
7 162.0	0.511	0.511	0.511	0.511	0.511	0.511
8 174.0	0.543	0.543	0.543	0.543	0.543	0.543
9 186.0	0.595	0.595	0.595	0.595	0.595	0.595
10 198.0	0.665	0.665	0.665	0.665	0.665	0.665
11 210.0	0.750	0.750	0.750	0.750	0.750	0.750
12 222.0	0.665	0.665	0.665	0.665	0.665	0.665
13 234.0	0.595	0.595	0.595	0.595	0.595	0.595
14 246.0	0.543	0.543	0.543	0.543	0.543	0.543
15 258.0	0.511	0.511	0.511	0.511	0.511	0.511
16 270.0	0.500	0.500	0.500	0.500	0.500	0.500
17 282.0	0.511	0.511	0.511	0.511	0.511	0.511
18 294.0	0.543	0.543	0.543	0.543	0.543	0.543
19 306.0	0.595	0.595	0.595	0.595	0.595	0.595
20 318.0	0.665	0.665	0.665	0.665	0.665	0.665
21 330.0	0.750	0.750	0.750	0.750	0.750	0.750
22 342.0	0.665	0.665	0.665	0.665	0.665	0.665
23 354.0	0.595	0.595	0.595	0.595	0.595	0.595
24 366.0	0.543	0.543	0.543	0.543	0.543	0.543
25 378.0	0.511	0.511	0.511	0.511	0.511	0.511
26 390.0	0.500	0.500	0.500	0.500	0.500	0.500
27 402.0	0.511	0.511	0.511	0.511	0.511	0.511
28 414.0	0.543	0.543	0.543	0.543	0.543	0.543
29 426.0	0.595	0.595	0.595	0.595	0.595	0.595
30 438.0	0.665	0.665	0.665	0.665	0.665	0.665
31 450.0	0.750	0.750	0.750	0.750	0.750	0.750

NON-DIM CLEARANCE DISTRIBUTION(H/C) FOR PAD NUMBER 1

	I = 19	20	21
AXIAL LENGTH IN.	1.463	1.544	1.625
J DEG.			
1 90.0	0.750	0.750	0.750
2 102.0	0.665	0.665	0.665
3 114.0	0.595	0.595	0.595
4 126.0	0.543	0.543	0.543
5 138.0	0.511	0.511	0.511
6 150.0	0.500	0.500	0.500
7 162.0	0.511	0.511	0.511
8 174.0	0.543	0.543	0.543
9 186.0	0.595	0.595	0.595
10 198.0	0.665	0.665	0.665
11 210.0	0.750	0.750	0.750
12 222.0	0.665	0.665	0.665
13 234.0	0.595	0.595	0.595
14 246.0	0.543	0.543	0.543
15 258.0	0.511	0.511	0.511
16 270.0	0.500	0.500	0.500
17 282.0	0.511	0.511	0.511
18 294.0	0.543	0.543	0.543
19 306.0	0.595	0.595	0.595
20 318.0	0.665	0.665	0.665
21 330.0	0.750	0.750	0.750
22 342.0	0.665	0.665	0.665
23 354.0	0.595	0.595	0.595
24 366.0	0.543	0.543	0.543
25 378.0	0.511	0.511	0.511
26 390.0	0.500	0.500	0.500
27 402.0	0.511	0.511	0.511
28 414.0	0.543	0.543	0.543
29 426.0	0.595	0.595	0.595
30 438.0	0.665	0.665	0.665
31 450.0	0.750	0.750	0.750

MIN. CLEAR.= 0.50000 AT 390.00 DEGREES

MAX. CLEAR.= 0.75000 AT 450.00 DEGREES

PRESSURE DISTRIBUTION (PSI) FOR PAD NUMBER 1

	I =	1	2	3	4	5	6
	AXIAL LENGTH IN.	0.000	0.081	0.162	0.244	0.325	0.406
J	DEG.						
1	90.0	0.000E+00	19.3	31.6	41.6	50.5	58.6
2	102.0	0.000E+00	23.9	38.0	49.4	59.4	68.5
3	114.0	0.000E+00	28.4	44.5	57.3	68.5	78.7
4	126.0	0.000E+00	32.5	50.3	64.3	76.4	87.1
5	138.0	0.000E+00	35.2	54.2	68.9	81.3	91.9
6	150.0	0.000E+00	35.9	55.0	69.7	81.8	92.1
7	162.0	0.000E+00	34.4	52.8	66.7	78.1	87.6
8	174.0	0.000E+00	30.6	47.4	60.2	70.6	79.4
9	186.0	0.000E+00	26.7	41.7	53.1	62.5	70.6
10	198.0	0.000E+00	21.0	33.8	43.8	52.5	60.5
11	210.0	0.000E+00	19.3	31.6	41.6	50.5	58.6
12	222.0	0.000E+00	23.9	38.0	49.4	59.4	68.5
13	234.0	0.000E+00	28.4	44.5	57.3	68.5	78.7
14	246.0	0.000E+00	32.5	50.3	64.3	76.4	87.1
15	258.0	0.000E+00	35.2	54.2	68.9	81.3	91.9
16	270.0	0.000E+00	35.9	55.0	69.7	81.8	92.1
17	282.0	0.000E+00	34.4	52.8	66.7	78.1	87.6
18	294.0	0.000E+00	30.6	47.4	60.2	70.6	79.4
19	306.0	0.000E+00	26.7	41.7	53.1	62.5	70.6
20	318.0	0.000E+00	21.0	33.8	43.8	52.5	60.5
21	330.0	0.000E+00	19.3	31.6	41.6	50.5	58.6
22	342.0	0.000E+00	23.9	38.0	49.4	59.4	68.5
23	354.0	0.000E+00	28.4	44.5	57.3	68.5	78.7
24	366.0	0.000E+00	32.5	50.3	64.3	76.4	87.1
25	378.0	0.000E+00	35.2	54.2	68.9	81.3	91.9
26	390.0	0.000E+00	35.9	55.0	69.7	81.8	92.1
27	402.0	0.000E+00	34.4	52.8	66.7	78.1	87.6
28	414.0	0.000E+00	30.6	47.4	60.2	70.6	79.4
29	426.0	0.000E+00	26.7	41.7	53.1	62.5	70.6
30	438.0	0.000E+00	21.0	33.8	43.8	52.5	60.5
31	450.0	0.000E+00	19.3	31.6	41.6	50.5	58.6

PRESSURE DISTRIBUTION (PSI) FOR PAD NUMBER 1

	I =	7	8	9	10	11	12
	AXIAL LENGTH IN.	0.487	0.569	0.650	0.731	0.813	0.894
J	DEG.						
1	90.0	66.1	73.2	79.5	84.6	87.1	84.6
2	102.0	77.1	85.4	93.6	102.	111.	102.
3	114.0	88.1	96.9	105.	113.	119.	113.
4	126.0	96.6	105.	112.	117.	120.	117.
5	138.0	101.	109.	115.	118.	120.	118.
6	150.0	101.	108.	113.	117.	120.	117.
7	162.0	95.5	102.	108.	113.	119.	113.
8	174.0	87.0	93.9	100.	108.	116.	108.
9	186.0	77.9	85.1	92.7	101.	112.	101.
10	198.0	68.4	76.6	85.6	95.8	108.	95.8
11	210.0	66.1	73.2	79.5	84.6	87.1	84.6
12	222.0	77.1	85.4	93.6	102.	111.	102.
13	234.0	88.1	96.9	105.	113.	119.	113.
14	246.0	96.6	105.	112.	117.	120.	117.
15	258.0	101.	109.	115.	118.	120.	118.
16	270.0	101.	108.	113.	117.	120.	117.
17	282.0	95.5	102.	108.	113.	119.	113.
18	294.0	87.0	93.9	100.	108.	116.	108.
19	306.0	77.9	85.1	92.7	101.	112.	101.
20	318.0	68.4	76.6	85.6	95.8	108.	95.8
21	330.0	66.1	73.2	79.5	84.6	87.1	84.6
22	342.0	77.1	85.4	93.6	102.	111.	102.
23	354.0	88.1	96.9	105.	113.	119.	113.
24	366.0	96.6	105.	112.	117.	120.	117.
25	378.0	101.	109.	115.	118.	120.	118.
26	390.0	101.	108.	113.	117.	120.	117.
27	402.0	95.5	102.	108.	113.	119.	113.
28	414.0	87.0	93.9	100.	108.	116.	108.
29	426.0	77.9	85.1	92.7	101.	112.	101.
30	438.0	68.4	76.6	85.6	95.8	108.	95.8
31	450.0	66.1	73.2	79.5	84.6	87.1	84.6

PRESSURE DISTRIBUTION (PSI) FOR PAD NUMBER 1

	I =	13	14	15	16	17	18
AXIAL LENGTH IN.		0.975	1.056	1.138	1.219	1.300	1.381
J	DEG.						
1	90.0	79.5	73.2	66.1	58.6	50.5	41.6
2	102.0	93.6	85.4	77.1	68.5	59.4	49.4
3	114.0	105.	96.9	88.1	78.7	68.5	57.3
4	126.0	112.	105.	96.6	87.1	76.4	64.3
5	138.0	115.	109.	101.	91.9	81.3	68.9
6	150.0	113.	108.	101.	92.1	81.8	69.7
7	162.0	108.	102.	95.5	87.6	78.1	66.7
8	174.0	100.	93.9	87.0	79.4	70.6	60.2
9	186.0	92.7	85.1	77.9	70.6	62.5	53.1
10	198.0	85.6	76.6	68.4	60.5	52.5	43.8
11	210.0	79.5	73.2	66.1	58.6	50.5	41.6
12	222.0	93.6	85.4	77.1	68.5	59.4	49.4
13	234.0	105.	96.9	88.1	78.7	68.5	57.3
14	246.0	112.	105.	96.6	87.1	76.4	64.3
15	258.0	115.	109.	101.	91.9	81.3	68.9
16	270.0	113.	108.	101.	92.1	81.8	69.7
17	282.0	108.	102.	95.5	87.6	78.1	66.7
18	294.0	100.	93.9	87.0	79.4	70.6	60.2
19	306.0	92.7	85.1	77.9	70.6	62.5	53.1
20	318.0	85.6	76.6	68.4	60.5	52.5	43.8
21	330.0	79.5	73.2	66.1	58.6	50.5	41.6
22	342.0	93.6	85.4	77.1	68.5	59.4	49.4
23	354.0	105.	96.9	88.1	78.7	68.5	57.3
24	366.0	112.	105.	96.6	87.1	76.4	64.3
25	378.0	115.	109.	101.	91.9	81.3	68.9
26	390.0	113.	108.	101.	92.1	81.8	69.7
27	402.0	108.	102.	95.5	87.6	78.1	66.7
28	414.0	100.	93.9	87.0	79.4	70.6	60.2
29	426.0	92.7	85.1	77.9	70.6	62.5	53.1
30	438.0	85.6	76.6	68.4	60.5	52.5	43.8
31	450.0	79.5	73.2	66.1	58.6	50.5	41.6

PRESSURE DISTRIBUTION (PSI) FOR PAD NUMBER 1

	I =	19	20	21
AXIAL LENGTH IN.		1.463	1.544	1.625
J	DEG.			
1	90.0	31.6	19.3	0.000E+00
2	102.0	38.0	23.9	0.000E+00
3	114.0	44.5	28.4	0.000E+00
4	126.0	50.3	32.5	0.000E+00
5	138.0	54.2	35.2	0.000E+00
6	150.0	55.0	35.9	0.000E+00
7	162.0	52.8	34.4	0.000E+00
8	174.0	47.4	30.6	0.000E+00
9	186.0	41.7	26.7	0.000E+00
10	198.0	33.8	21.0	0.000E+00
11	210.0	31.6	19.3	0.000E+00
12	222.0	38.0	23.9	0.000E+00
13	234.0	44.5	28.4	0.000E+00
14	246.0	50.3	32.5	0.000E+00
15	258.0	54.2	35.2	0.000E+00
16	270.0	55.0	35.9	0.000E+00
17	282.0	52.8	34.4	0.000E+00
18	294.0	47.4	30.6	0.000E+00
19	306.0	41.7	26.7	0.000E+00
20	318.0	33.8	21.0	0.000E+00
21	330.0	31.6	19.3	0.000E+00
22	342.0	38.0	23.9	0.000E+00
23	354.0	44.5	28.4	0.000E+00
24	366.0	50.3	32.5	0.000E+00
25	378.0	54.2	35.2	0.000E+00
26	390.0	55.0	35.9	0.000E+00
27	402.0	52.8	34.4	0.000E+00
28	414.0	47.4	30.6	0.000E+00
29	426.0	41.7	26.7	0.000E+00
30	438.0	33.8	21.0	0.000E+00
31	450.0	31.6	19.3	0.000E+00

MIN. PRESS= 0.00000E+00 AT 450.00 DEGREES

MAX. PRESS= 119.77 AT 270.00 DEGREES

```
GCYL      MTI      SAMPLE CASE 2:   SECTORED SEAL


 -JOURNAL & LOAD POSITION
   ECCENTRICITY            =     0.00000
   ECCENTRICITY ANGLE      =        0.00 DEG
   MINIMUM FILM            =   0.0002500 IN
   LOAD                    =  0.8831E-12 LB
   LOAD ANGLE              =      -54.45 DEG

   POWER LOSS              =   1.251     HP

   LEAKAGE AT I = 1        =-0.14815E-03 LB/S

   LEAKAGE AT I = M        = 0.14815E-03 LB/S

 -RIGHTING MOMENT
   ABOUT X-X            MX = -0.2746E-13 LB-IN
   ABOUT Y-Y            MY = -0.6432E-14 LB-IN
```



```
GCYL      MTI      SAMPLE CASE 2:   SECTORED SEAL


 ECHO OF INPUT

NO MORE INPUT, PROGRAM TERMINATED
```

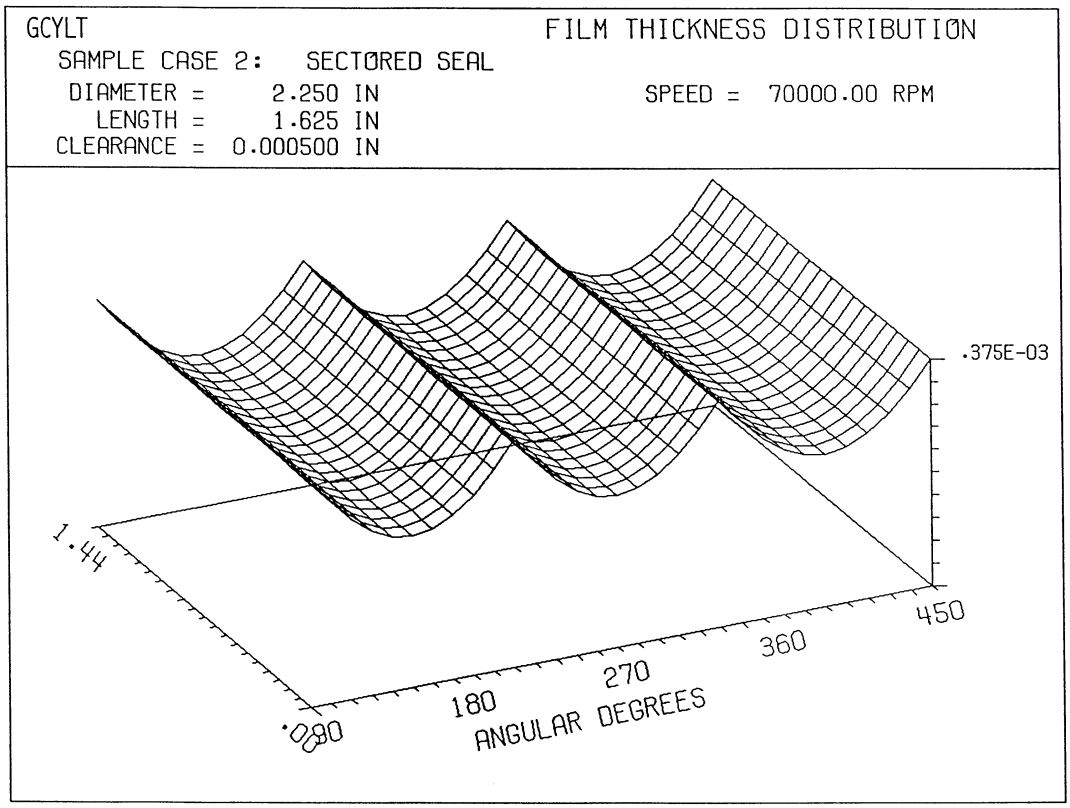

94TM10

Figure 5-5. Clearance Distribution, Sectored Lobe Seal

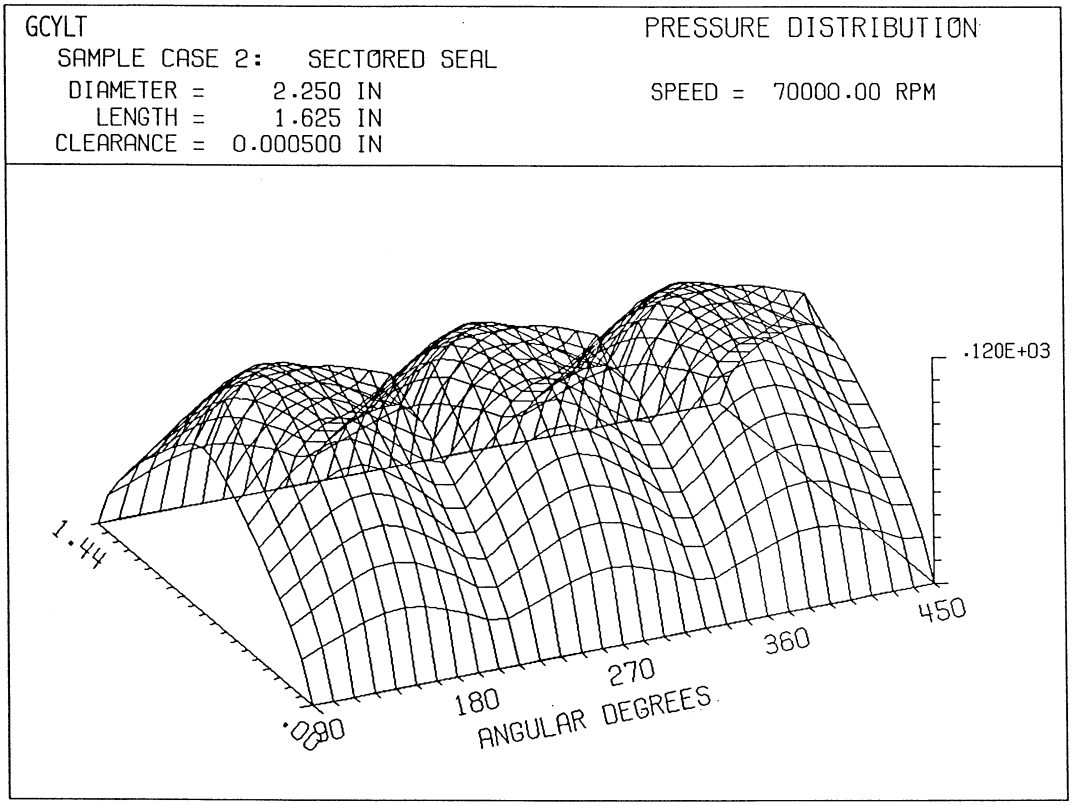

94TM10

Figure 5-6. Pressure Distribution, Sectored Lobe Seal

5.3 Sample Problem 3 - Three-Lobe Seal

This problem deals with the hydrodynamic portion of a 3-lobe seal where the lobes are separated by axial grooves. Figure 5-7 shows the general geometry and key parameters. The principal parameters are the preload and pivot angle. The following are geometry and operating conditions:

- OPTION = 2, i.e., the position of the seal to satisfy a given load will be determined
- International units apply; parameter SI invoked
- Stiffness and damping to be calculated in two degrees of freedom, x and y, at an imposed frequency equal to running speed of 50,000 rpm
- Number of pads = 3
- Start of the first pad is at 100°; the pad extent is 100°
- Pad preload is 50% of the reference clearance, and the preload for the first pad occurs 150° from the x-axis, which means the preload is in the center of the pad
- Shaft diameter = 0.0508 m
- Hydrodynamic length = 0.0254 m
- Reference clearance = 1.27×10^{-5} m
- Lubricant viscosity = 2.07×10^{-5} N-s/m^2
- Absolute temperature = 283°K
- Ratio of specific heat of the gas = 1.4
- Gas constant = 290.32 m^3/(s^2-°R)
- Symmetry is applied in the axial direction
- Load to be supported = 200.16 N
- Angle at which the load is applied is 270° from the x-axis
- Initial eccentricity guess is 0.2; initial displacement angle guess is 270° from the x-axis
- Shaft speed = 50,000 rpm
- Reference pressure = 8.274×10^5 Pa.
- Boundary pressures are all 0 gage.

Following are the input and output and the graphical representation of the clearance distribution and pressure distribution, as shown on Figures 5-8 and 5-9 respectively. Figure 5-10 shows the pressure distribution viewing along an axial direction. The negative pressures are induced by divergent clearance regions. The final eccentricity ratio to balance the applied load was 0.22, and the eccentricity angle was 129.42° The last part of the output indicates the cross-coupled stiffness and damping coefficients. This problem is identified as SAMPLE3.xxx on the diskette submitted to NASA.

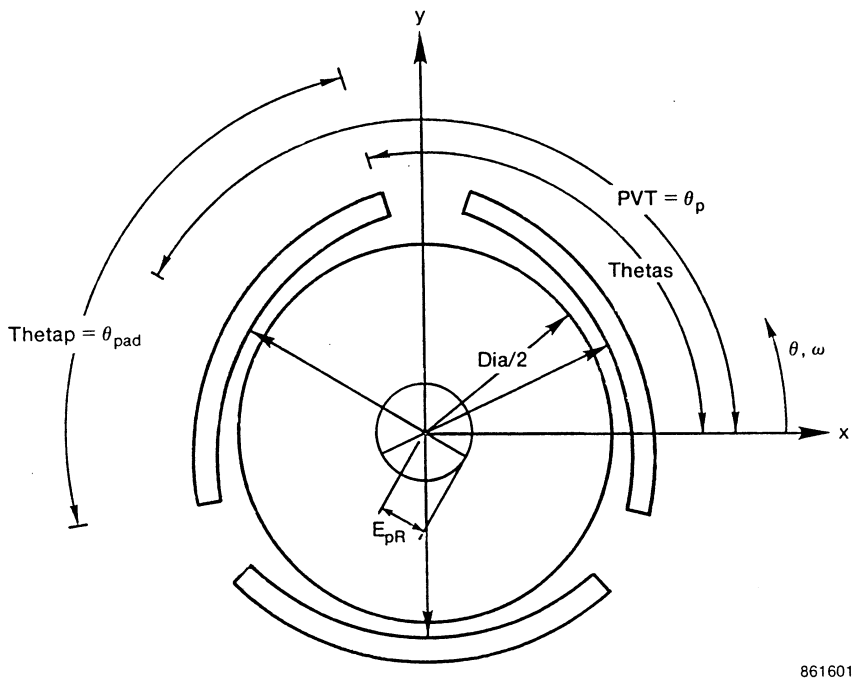

Keyword	Variable	Description
START	THETAS	Pad Start Angle
PADANGLE	THETAP	Pad Angle
PIVOT	PVT	Pivot Angle
PRELOAD	EPR	Offset/Clearance

Figure 5-7. Three-Lobe Seal

```
SAMPLE3
SAMPLE CASE 3:   3-LOBE GAS SEAL
OPTION      2
SI
STIFFNESS  2  50000.
NPAD       3
START      100.
PADANGLE   100.
DIAMETER   .0508
LENGTH     .0254
CLEARANCE  1.27E-005
GRIDN      25
GRIDM      5
PRELOAD    0.5
PIVOT      150.
VISCOSITY     2.07E-005
ABSTEMP       283.
SPHEAT        1.4
GASCONST      290.32
SYMMETRIC
ITERATION  15  15
TOLERANCE  .001  .001
LOAD       200.16
LOADANGLE  270.
ECC        .2
ECCANGLE   270.
SPEED      50000.
PO         8.274E+005
PLEFT      0.0
PRITE      0.0
PTOP       0.0
PBOT       0.0
END
```

```
GCYL      MTI     SAMPLE CASE 3:   3-LOBE GAS SEAL


 ECHO OF INPUT

 OPTION     =    2          GIVEN LOAD, LOAD ANGLE FIND EX, EY
 UNIT       =   2.          SI UNIT
 ISTIF      =    1          STIFFNESS CALCULATION
 DEGREES OF FREEDOM =   2.
 EXCITATION SPEED, RPM  =   50000.0000
 NPAD       =    3          NUMBER OF PADS
 START      =    100.00     STARTING ANGLE OF PAD # 1
 PAD ANGLE  =    100.00          PAD ANGLE OF PAD # 1
 DIAMETER   =    0.0508     BEARING DIAMETER
 LENGTH     =    0.0254     BEARING LENTH
 CLEARANCE  =  0.000013     BEARING CLEARANCE
 GRIDN      =   25          GRID POINTS IN CIRCUMFERENTIAL DIRECTION
 GRIDM      =    5          GRID POINTS IN AXIAL DIRECTION
 PRELOAD    =    0.5000     PRELOAD
 PIVOT ANG  =    150.00     PRELOAD PIVOT ANGLE
 VISCOSITY  =  0.2070E-04   ABSOLUTE VISCOSITY
 ABS TEMP   =    283.00     ABSOLUTE TEMPERATURE
 SPECIFIC   =    1.4000     SPECIFIC HEAT RATIO
 GAS CONST  =     290.3     GAS CONSTANT
 SYMMETRIC                  SYMMETRIC BOUNDARY
 MXIT1      =  15.          (FOR COMPRESSIBILITY)
 MXIT2      =  15.          (FOR OPTION 2)
 TOL1       =    0.0010     TOLERANCE(COMPRESSIBILITY)
 TOL2       =    0.0010     ITERATION(OPTION 2)
 LOAD       =  200.1600     LOAD
 LOAD ANGLE=     270.00     LOAD ANGLE
 ECC        =    0.2000     ECCENTRICITY RATIO
 ECCANGLE   =    270.00     ECCENTRICITY ANGLE
 SPEED      =  50000.00     ROTATIONAL SPEED IN RPM
 PO         = 827400.00     REFERENCE(AMBIENT)  PRESSURE
 PLEFT      =       0.00    GAGE PRESSURE AT LEFT BOUNDARY
 PRITE      =       0.00    GAGE PRESSURE AT RIGHT BOUNDARY
 PTOP       =       0.00    GAGE PRESSURE AT TOP BOUNDARY
 PBOT       =       0.00    GAGE PRESSURE AT BOTTOM BOUNDARY
 END                        END OF INPUT
```

```
GCYL      MTI     SAMPLE CASE 3:   3-LOBE GAS SEAL


 GAS JOURNAL BEARING/SEAL


 -BEARING GEOMETRY
  NUMBER OF PADS =     3
          LENGTH =     0.0254 M
        DIAMETER =     0.0508 M
       CLEARANCE =  0.000013 M
  STARTING ANGLE =     100.00 DEG
       PAD ANGLE =     100.00 DEG

 -SPECIAL FILM THICKNESS SPECIFICATION
         PRELOAD =     0.5000
     PIVOT ANGLE =     150.00 DEG

 -LUBRICANT PROPERTIES
               VISCOSITY =  0.2070000E-04 N-S/M**2
            GAS CONSTANT =   290.3200     M**2/S**2-K
       ABS. TEMPERATURE =   283.0000     DEG K
     SPECIFIC HEAT RATIO =   1.400000

 -BOUNDARY CONDITIONS
     REFERENCE P =   827400.0     PASCAL
           PLEFT =  0.0000000E+00 PASCAL
           PRITE =  0.0000000E+00 PASCAL
            PTOP =  0.0000000E+00 PASCAL
            PBOT =  0.0000000E+00 PASCAL
           SPEED =   50000.00     RPM

 -BEARING MODEL
                M =    5
                N =   25
           JOINED =    F
         SYMMETRY =    T

   Z -
   0.0000E+00  0.3175E-02  0.6350E-02  0.9525E-02  0.1270E-01

   THETA -
    100.0       104.2       108.3       112.5       116.7
    120.8       125.0       129.2       133.3       137.5
    141.7       145.8       150.0       154.2       158.3
    162.5       166.7       170.8       175.0       179.2
    183.3       187.5       191.7       195.8       200.0

 -MAXIMUM NUMBER OF ITERATIONS
    MXIT1 =   15        (FOR COMPRESSIBILITY)
    MXIT2 =   15        (FOR OPTION 2)

 -TOLERANCE
     TOL1 =   0.00100  (FOR COMPRESSIBILITY)
     TOL2 =   0.00100  (FOR OPTION 2)

 -OPTION  =    2        GIVEN LOAD, LOAD ANGLE FIND SHAFT POSITION


 SPECIFIED PRESSURE
     1 F F F F F
     2 F F F F F
     3 F F F F F
     4 F F F F F
     5 F F F F F
```



```
     6 F F F F F
     7 F F F F F
     8 F F F F F
     9 F F F F F
    10 F F F F F
    11 F F F F F
    12 F F F F F
    13 F F F F F
    14 F F F F F
    15 F F F F F
    16 F F F F F
    17 F F F F F
    18 F F F F F
    19 F F F F F
    20 F F F F F
    21 F F F F F
    22 F F F F F
    23 F F F F F
    24 F F F F F
    25 F F F F F
 PAD #  1  PRESSURE CALCULATION CONVERGED IN  4 ITERATIONS
 PAD #  2  PRESSURE CALCULATION CONVERGED IN  4 ITERATIONS
 PAD #  3  PRESSURE CALCULATION CONVERGED IN  4 ITERATIONS
 PAD #  1  PRESSURE CALCULATION CONVERGED IN  4 ITERATIONS
 PAD #  2  PRESSURE CALCULATION CONVERGED IN  4 ITERATIONS
 PAD #  3  PRESSURE CALCULATION CONVERGED IN  4 ITERATIONS
 PAD #  1  PRESSURE CALCULATION CONVERGED IN  4 ITERATIONS
 PAD #  2  PRESSURE CALCULATION CONVERGED IN  4 ITERATIONS
 PAD #  3  PRESSURE CALCULATION CONVERGED IN  4 ITERATIONS
 PAD #  1  PRESSURE CALCULATION CONVERGED IN  4 ITERATIONS
 PAD #  2  PRESSURE CALCULATION CONVERGED IN  4 ITERATIONS
 PAD #  3  PRESSURE CALCULATION CONVERGED IN  4 ITERATIONS
 PAD #  1  PRESSURE CALCULATION CONVERGED IN  2 ITERATIONS
 PAD #  2  PRESSURE CALCULATION CONVERGED IN  2 ITERATIONS
 PAD #  3  PRESSURE CALCULATION CONVERGED IN  2 ITERATIONS
 PAD #  1  PRESSURE CALCULATION CONVERGED IN  2 ITERATIONS
 PAD #  2  PRESSURE CALCULATION CONVERGED IN  2 ITERATIONS
 PAD #  3  PRESSURE CALCULATION CONVERGED IN  2 ITERATIONS
 PAD #  1  PRESSURE CALCULATION CONVERGED IN  4 ITERATIONS
 PAD #  2  PRESSURE CALCULATION CONVERGED IN  4 ITERATIONS
 PAD #  3  PRESSURE CALCULATION CONVERGED IN  3 ITERATIONS
 PAD #  1  PRESSURE CALCULATION CONVERGED IN  3 ITERATIONS
 PAD #  2  PRESSURE CALCULATION CONVERGED IN  2 ITERATIONS
 PAD #  3  PRESSURE CALCULATION CONVERGED IN  2 ITERATIONS
 PAD #  1  PRESSURE CALCULATION CONVERGED IN  2 ITERATIONS
 PAD #  2  PRESSURE CALCULATION CONVERGED IN  2 ITERATIONS
 PAD #  3  PRESSURE CALCULATION CONVERGED IN  2 ITERATIONS
 PAD #  1  PRESSURE CALCULATION CONVERGED IN  3 ITERATIONS
 PAD #  2  PRESSURE CALCULATION CONVERGED IN  3 ITERATIONS
 PAD #  3  PRESSURE CALCULATION CONVERGED IN  3 ITERATIONS
 PAD #  1  PRESSURE CALCULATION CONVERGED IN  2 ITERATIONS
 PAD #  2  PRESSURE CALCULATION CONVERGED IN  2 ITERATIONS
 PAD #  3  PRESSURE CALCULATION CONVERGED IN  2 ITERATIONS
 PAD #  1  PRESSURE CALCULATION CONVERGED IN  2 ITERATIONS
 PAD #  2  PRESSURE CALCULATION CONVERGED IN  2 ITERATIONS
 PAD #  3  PRESSURE CALCULATION CONVERGED IN  2 ITERATIONS
 PAD #  1  PRESSURE CALCULATION CONVERGED IN  2 ITERATIONS
 PAD #  2  PRESSURE CALCULATION CONVERGED IN  2 ITERATIONS
 PAD #  3  PRESSURE CALCULATION CONVERGED IN  2 ITERATIONS
```

NON-DIM CLEARANCE DISTRIBUTION(H/C) FOR PAD NUMBER 1

	I = 1	2	3	4	5
AXIAL LENGTH METERS	0.000	0.003	0.006	0.010	0.013
J DEG.					
1 100.0	0.486	0.486	0.486	0.486	0.486
2 104.2	0.452	0.452	0.452	0.452	0.452
3 108.3	0.420	0.420	0.420	0.420	0.420
4 112.5	0.392	0.392	0.392	0.392	0.392
5 116.7	0.367	0.367	0.367	0.367	0.367
6 120.8	0.345	0.345	0.345	0.345	0.345
7 125.0	0.327	0.327	0.327	0.327	0.327
8 129.2	0.312	0.312	0.312	0.312	0.312
9 133.3	0.301	0.301	0.301	0.301	0.301
10 137.5	0.293	0.293	0.293	0.293	0.293
11 141.7	0.289	0.289	0.289	0.289	0.289
12 145.8	0.289	0.289	0.289	0.289	0.289
13 150.0	0.293	0.293	0.293	0.293	0.293
14 154.2	0.301	0.301	0.301	0.301	0.301
15 158.3	0.312	0.312	0.312	0.312	0.312
16 162.5	0.327	0.327	0.327	0.327	0.327
17 166.7	0.345	0.345	0.345	0.345	0.345
18 170.8	0.367	0.367	0.367	0.367	0.367
19 175.0	0.392	0.392	0.392	0.392	0.392
20 179.2	0.421	0.421	0.421	0.421	0.421
21 183.3	0.452	0.452	0.452	0.452	0.452
22 187.5	0.487	0.487	0.487	0.487	0.487
23 191.7	0.524	0.524	0.524	0.524	0.524
24 195.8	0.563	0.563	0.563	0.563	0.563
25 200.0	0.605	0.605	0.605	0.605	0.605

MIN. CLEAR.= 0.28943 AT 141.67 DEGREES

MAX. CLEAR.= 0.60516 AT 200.00 DEGREES

PRESSURE DISTRIBUTION (MEGA - PASCAL) FOR PAD NUMBER 1

	I = 1	2	3	4	5
AXIAL LENGTH METERS	0.000	0.003	0.006	0.010	0.013
J DEG.					
1 100.0	0.000E+00	0.000E+00	0.000E+00	0.000E+00	0.000E+00
2 104.2	0.000E+00	0.444E-01	0.539E-01	0.562E-01	0.567E-01
3 108.3	0.000E+00	0.856E-01	0.108	0.114	0.116
4 112.5	0.000E+00	0.124	0.162	0.173	0.175
5 116.7	0.000E+00	0.161	0.214	0.231	0.235
6 120.8	0.000E+00	0.194	0.262	0.285	0.291
7 125.0	0.000E+00	0.222	0.305	0.335	0.342
8 129.2	0.000E+00	0.243	0.339	0.376	0.385
9 133.3	0.000E+00	0.256	0.363	0.405	0.417
10 137.5	0.000E+00	0.259	0.374	0.421	0.434
11 141.7	0.000E+00	0.251	0.370	0.422	0.436
12 145.8	0.000E+00	0.232	0.352	0.406	0.421
13 150.0	0.000E+00	0.202	0.319	0.375	0.391
14 154.2	0.000E+00	0.165	0.275	0.330	0.346
15 158.3	0.000E+00	0.122	0.222	0.274	0.290
16 162.5	0.000E+00	0.766E-01	0.162	0.211	0.227
17 166.7	0.000E+00	0.312E-01	0.100E+00	0.144	0.159
18 170.8	0.000E+00	-.117E-01	0.382E-01	0.761E-01	0.890E-01
19 175.0	0.000E+00	-.501E-01	-.208E-01	0.957E-02	0.206E-01
20 179.2	0.000E+00	-.828E-01	-.748E-01	-.532E-01	-.443E-01
21 183.3	0.000E+00	-.108	-.121	-.109	-.103
22 187.5	0.000E+00	-.124	-.155	-.153	-.150
23 191.7	0.000E+00	-.122	-.163	-.169	-.168
24 195.8	0.000E+00	-.869E-01	-.118	-.125	-.126
25 200.0	0.000E+00	0.000E+00	0.000E+00	0.000E+00	0.000E+00

MIN. PRESS= -0.16879 AT 191.67 DEGREES

MAX. PRESS= 0.43601 AT 141.67 DEGREES

NON-DIM CLEARANCE DISTRIBUTION(H/C) FOR PAD NUMBER 2

	I =	1	2	3	4	5
AXIAL LENGTH METERS		0.000	0.003	0.006	0.010	0.013
J	DEG.					
1	220.0	0.681	0.681	0.681	0.681	0.681
2	224.2	0.670	0.670	0.670	0.670	0.670
3	228.3	0.661	0.661	0.661	0.661	0.661
4	232.5	0.653	0.653	0.653	0.653	0.653
5	236.7	0.648	0.648	0.648	0.648	0.648
6	240.8	0.644	0.644	0.644	0.644	0.644
7	245.0	0.642	0.642	0.642	0.642	0.642
8	249.2	0.642	0.642	0.642	0.642	0.642
9	253.3	0.644	0.644	0.644	0.644	0.644
10	257.5	0.648	0.648	0.648	0.648	0.648
11	261.7	0.654	0.654	0.654	0.654	0.654
12	265.8	0.661	0.661	0.661	0.661	0.661
13	270.0	0.671	0.671	0.671	0.671	0.671
14	274.2	0.682	0.682	0.682	0.682	0.682
15	278.3	0.694	0.694	0.694	0.694	0.694
16	282.5	0.709	0.709	0.709	0.709	0.709
17	286.7	0.725	0.725	0.725	0.725	0.725
18	290.8	0.742	0.742	0.742	0.742	0.742
19	295.0	0.761	0.761	0.761	0.761	0.761
20	299.2	0.781	0.781	0.781	0.781	0.781
21	303.3	0.802	0.802	0.802	0.802	0.802
22	307.5	0.824	0.824	0.824	0.824	0.824
23	311.7	0.847	0.847	0.847	0.847	0.847
24	315.8	0.871	0.871	0.871	0.871	0.871
25	320.0	0.896	0.896	0.896	0.896	0.896

MIN. CLEAR.= 0.64220 AT 245.00 DEGREES

MAX. CLEAR.= 0.89573 AT 320.00 DEGREES

PRESSURE DISTRIBUTION (MEGA - PASCAL) FOR PAD NUMBER 2

	I =	1	2	3	4	5
AXIAL LENGTH METERS		0.000	0.003	0.006	0.010	0.013
J	DEG.					
1	220.0	0.000E+00	0.000E+00	0.000E+00	0.000E+00	0.000E+00
2	224.2	0.000E+00	0.601E-02	0.785E-02	0.848E-02	0.864E-02
3	228.3	0.000E+00	0.976E-02	0.134E-01	0.148E-01	0.151E-01
4	232.5	0.000E+00	0.117E-01	0.167E-01	0.188E-01	0.194E-01
5	236.7	0.000E+00	0.120E-01	0.179E-01	0.205E-01	0.212E-01
6	240.8	0.000E+00	0.110E-01	0.171E-01	0.199E-01	0.208E-01
7	245.0	0.000E+00	0.883E-02	0.144E-01	0.172E-01	0.180E-01
8	249.2	0.000E+00	0.560E-02	0.992E-02	0.124E-01	0.132E-01
9	253.3	0.000E+00	0.151E-02	0.400E-02	0.575E-02	0.635E-02
10	257.5	0.000E+00	-.328E-02	-.319E-02	-.248E-02	-.217E-02
11	261.7	0.000E+00	-.857E-02	-.114E-01	-.120E-01	-.121E-01
12	265.8	0.000E+00	-.142E-01	-.202E-01	-.225E-01	-.231E-01
13	270.0	0.000E+00	-.199E-01	-.295E-01	-.336E-01	-.348E-01
14	274.2	0.000E+00	-.255E-01	-.388E-01	-.450E-01	-.468E-01
15	278.3	0.000E+00	-.308E-01	-.479E-01	-.562E-01	-.586E-01
16	282.5	0.000E+00	-.357E-01	-.564E-01	-.667E-01	-.699E-01
17	286.7	0.000E+00	-.399E-01	-.638E-01	-.762E-01	-.800E-01
18	290.8	0.000E+00	-.432E-01	-.698E-01	-.839E-01	-.883E-01
19	295.0	0.000E+00	-.454E-01	-.739E-01	-.893E-01	-.941E-01
20	299.2	0.000E+00	-.460E-01	-.753E-01	-.913E-01	-.963E-01
21	303.3	0.000E+00	-.447E-01	-.732E-01	-.888E-01	-.937E-01
22	307.5	0.000E+00	-.407E-01	-.663E-01	-.803E-01	-.847E-01
23	311.7	0.000E+00	-.331E-01	-.532E-01	-.641E-01	-.675E-01
24	315.8	0.000E+00	-.203E-01	-.319E-01	-.381E-01	-.400E-01
25	320.0	0.000E+00	0.000E+00	0.000E+00	0.000E+00	0.000E+00

MIN. PRESS= -0.96296E-01 AT 299.17 DEGREES

MAX. PRESS= 0.21239E-01 AT 236.67 DEGREES

NON-DIM CLEARANCE DISTRIBUTION(H/C) FOR PAD NUMBER 3

I =		1	2	3	4	5
AXIAL LENGTH METERS		0.000	0.003	0.006	0.010	0.013
J	DEG.					
1	340.0	0.869	0.869	0.869	0.869	0.869
2	344.2	0.833	0.833	0.833	0.833	0.833
3	348.3	0.798	0.798	0.798	0.798	0.798
4	352.5	0.765	0.765	0.765	0.765	0.765
5	356.7	0.732	0.732	0.732	0.732	0.732
6	360.8	0.701	0.701	0.701	0.701	0.701
7	365.0	0.672	0.672	0.672	0.672	0.672
8	369.2	0.644	0.644	0.644	0.644	0.644
9	373.3	0.618	0.618	0.618	0.618	0.618
10	377.5	0.594	0.594	0.594	0.594	0.594
11	381.7	0.573	0.573	0.573	0.573	0.573
12	385.8	0.553	0.553	0.553	0.553	0.553
13	390.0	0.536	0.536	0.536	0.536	0.536
14	394.2	0.522	0.522	0.522	0.522	0.522
15	398.3	0.509	0.509	0.509	0.509	0.509
16	402.5	0.500	0.500	0.500	0.500	0.500
17	406.7	0.493	0.493	0.493	0.493	0.493
18	410.8	0.489	0.489	0.489	0.489	0.489
19	415.0	0.488	0.488	0.488	0.488	0.488
20	419.2	0.489	0.489	0.489	0.489	0.489
21	423.3	0.493	0.493	0.493	0.493	0.493
22	427.5	0.499	0.499	0.499	0.499	0.499
23	431.7	0.509	0.509	0.509	0.509	0.509
24	435.8	0.521	0.521	0.521	0.521	0.521
25	440.0	0.535	0.535	0.535	0.535	0.535

MIN. CLEAR.= 0.48753 AT 415.00 DEGREES

MAX. CLEAR.= 0.86877 AT 340.00 DEGREES

PRESSURE DISTRIBUTION (MEGA - PASCAL) FOR PAD NUMBER 3

I =		1	2	3	4	5
AXIAL LENGTH METERS		0.000	0.003	0.006	0.010	0.013
J	DEG.					
1	340.0	0.000E+00	0.000E+00	0.000E+00	0.000E+00	0.000E+00
2	344.2	0.000E+00	0.162E-01	0.227E-01	0.255E-01	0.262E-01
3	348.3	0.000E+00	0.304E-01	0.443E-01	0.505E-01	0.523E-01
4	352.5	0.000E+00	0.437E-01	0.651E-01	0.750E-01	0.779E-01
5	356.7	0.000E+00	0.562E-01	0.851E-01	0.990E-01	0.103
6	360.8	0.000E+00	0.682E-01	0.105	0.122	0.128
7	365.0	0.000E+00	0.798E-01	0.123	0.145	0.152
8	369.2	0.000E+00	0.909E-01	0.141	0.167	0.175
9	373.3	0.000E+00	0.101	0.158	0.187	0.196
10	377.5	0.000E+00	0.111	0.174	0.206	0.216
11	381.7	0.000E+00	0.119	0.187	0.223	0.234
12	385.8	0.000E+00	0.126	0.199	0.238	0.250
13	390.0	0.000E+00	0.131	0.208	0.249	0.262
14	394.2	0.000E+00	0.134	0.214	0.257	0.270
15	398.3	0.000E+00	0.134	0.216	0.260	0.274
16	402.5	0.000E+00	0.132	0.214	0.259	0.273
17	406.7	0.000E+00	0.127	0.208	0.253	0.268
18	410.8	0.000E+00	0.119	0.198	0.242	0.257
19	415.0	0.000E+00	0.108	0.183	0.226	0.240
20	419.2	0.000E+00	0.947E-01	0.164	0.205	0.219
21	423.3	0.000E+00	0.791E-01	0.142	0.180	0.193
22	427.5	0.000E+00	0.617E-01	0.116	0.150	0.161
23	431.7	0.000E+00	0.425E-01	0.854E-01	0.114	0.123
24	435.8	0.000E+00	0.217E-01	0.490E-01	0.679E-01	0.744E-01
25	440.0	0.000E+00	0.000E+00	0.000E+00	0.000E+00	0.000E+00

MIN. PRESS= 0.00000E+00 AT 440.00 DEGREES

MAX. PRESS= 0.27411 AT 398.33 DEGREES

GCYL MTI SAMPLE CASE 3: 3-LOBE GAS SEAL

```
-JOURNAL & LOAD POSITION
  ECCENTRICITY          =     0.22087
  ECCENTRICITY ANGLE    =      129.42 DEG
  MINIMUM FILM          =   0.0000037 M
  LOAD                  =   200.2     N
  LOAD ANGLE            =      -90.00 DEG

  POWER LOSS            =   186.2     W

  LEAKAGE AT I = 1      =-0.12904E-04 KG/S

-STIFFNESS COEFFICIENTS
  PRINCIPAL  X      KXX =  0.1459E+09 N/M
  CROSS-COUPLED     KXY = -0.2373E+08 N/M
  CROSS-COUPLED     KXA =  0.0000E+00 N/RAD
  CROSS-COUPLED     KXB =  0.0000E+00 N/RAD
  CROSS-COUPLED     KYX = -0.3890E+08 N/M
  PRINCIPAL  Y      KYY =  0.1003E+09 N/M
  CROSS-COUPLED     KYA =  0.0000E+00 N/RAD
  CROSS-COUPLED     KYB =  0.0000E+00 N/RAD
  CROSS-COUPLED     KAX =  0.0000E+00 N-M/M
  CROSS-COUPLED     KAY =  0.0000E+00 N-M/M
  PRINCIPAL  A      KAA =  0.0000E+00 N-M/RAD
  CROSS-COUPLED     KAB =  0.0000E+00 N-M/RAD
  CROSS-COUPLED     KBX =  0.0000E+00 N-M/M
  CROSS-COUPLED     KBY =  0.0000E+00 N-M/M
  CROSS-COUPLED     KBA =  0.0000E+00 N-M/RAD
  PRINCIPAL  B      KBB =  0.0000E+00 N-M/RAD

-DAMPING COEFFICIENTS
  PRINCIPAL  X      DXX =   9977.     N-S/M
  CROSS-COUPLED     DXY = -0.1090E+05 N-S/M
  CROSS-COUPLED     DXA =  0.0000E+00 N-S/M
  CROSS-COUPLED     DXB =  0.0000E+00 N-S/RAD
  CROSS-COUPLED     DYX =   5162.     N-S/M
  PRINCIPAL  Y      DYY =  0.1392E+05 N-S/M
  CROSS-COUPLED     DYA =  0.0000E+00 N-S/RAD
  CROSS-COUPLED     DYB =  0.0000E+00 N-S/RAD
  CROSS-COUPLED     DAX =  0.0000E+00 N-M-S/M
  CROSS-COUPLED     DAY =  0.0000E+00 N-M-S/M
  PRINCIPAL  A      DAA =  0.0000E+00 N-M-S/RAD
  CROSS-COUPLED     DAB =  0.0000E+00 N-M-S/RAD
  CROSS-COUPLED     DBX =  0.0000E+00 N-M-S/M
  CROSS-COUPLED     DBY =  0.0000E+00 N-M-S/M
  CROSS-COUPLED     DBA =  0.0000E+00 N-M-S/RAD
  PRINCIPAL  B      DBB =  0.0000E+00 N-M-S/RAD
```


GCYL MTI SAMPLE CASE 3: 3-LOBE GAS SEAL

ECHO OF INPUT

NO MORE INPUT, PROGRAM TERMINATED

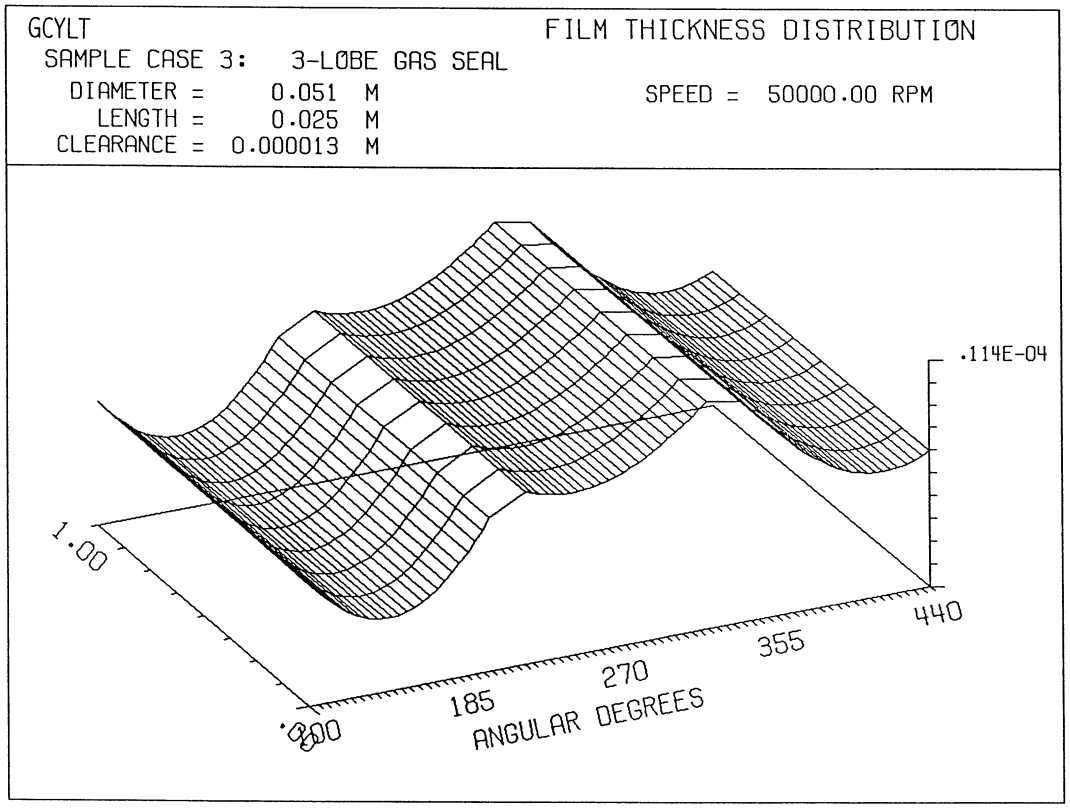

94TM10

Figure 5-8. Clearance Distribution, Three-Lobe Seal

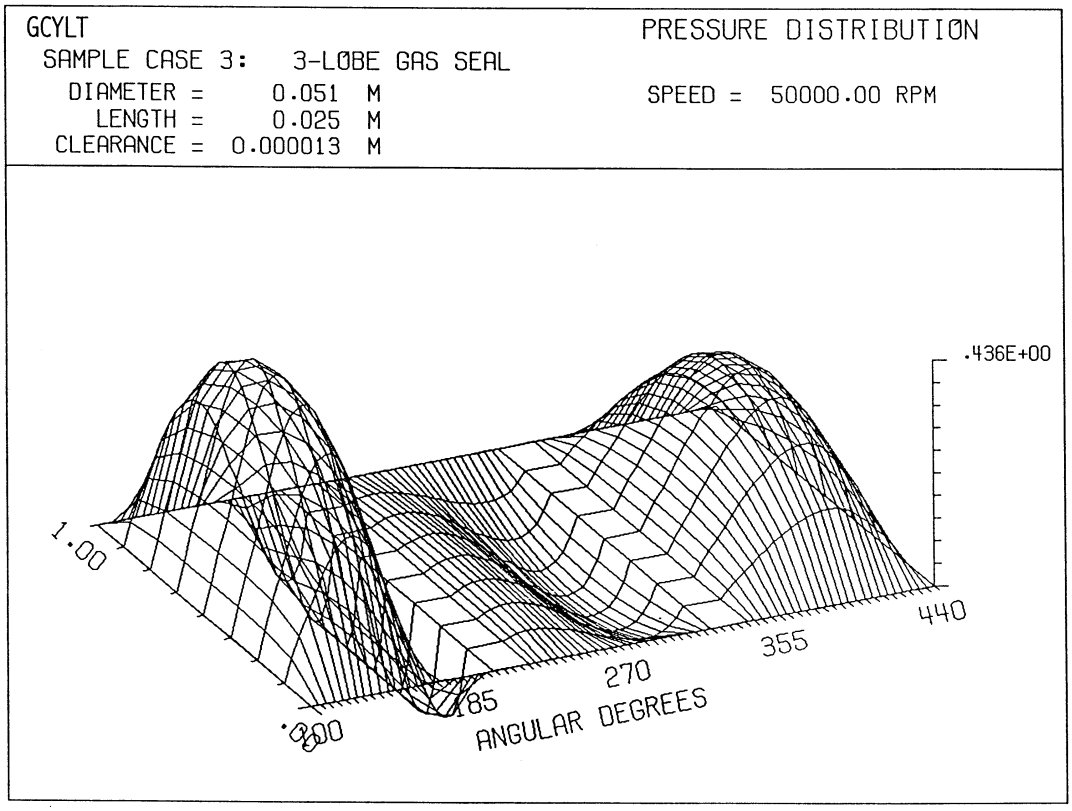

94TM10

Figure 5-9. Pressure Distribution, Three-Lobe Seal

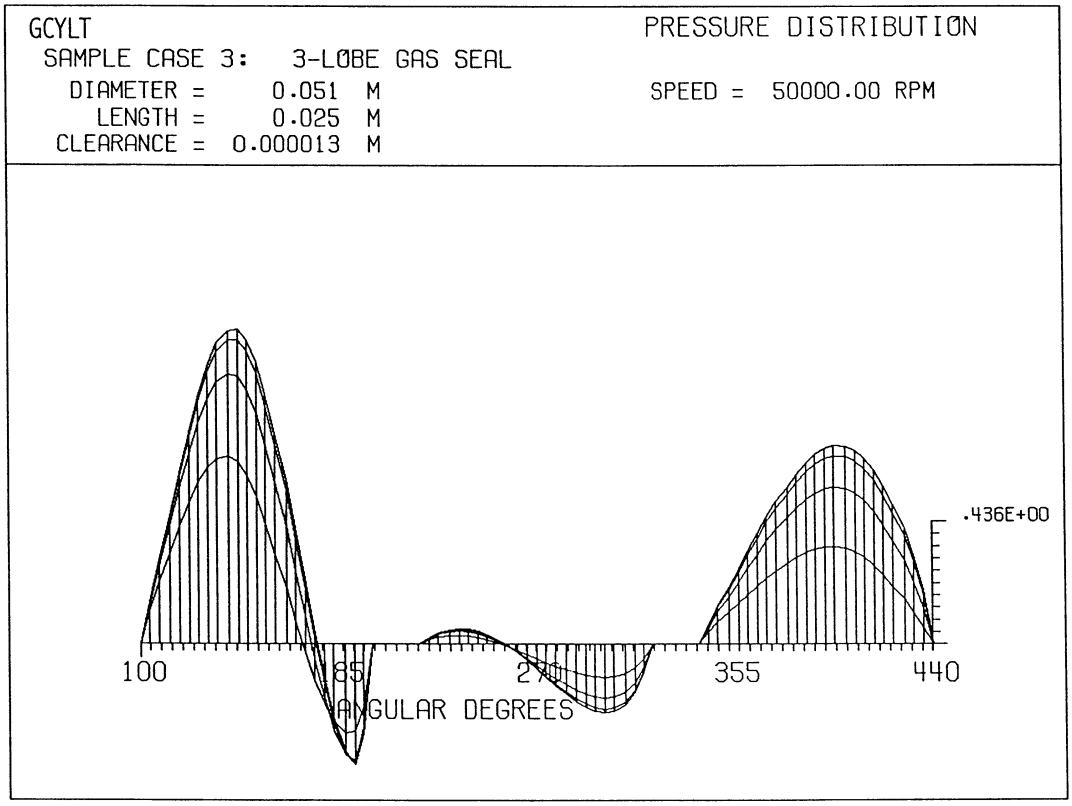

94TM10

Figure 5-10. Pressure Distribution, Viewing in Axial Direction

5.4 Sample Problem 4 - T-Shaped Sectored Seal

This problem deals with an actual helium buffered seal analysis and design (for SSME) that was accomplished for NASA. A design that incorporates a self-adjusting clearance that can accommodate thermal and centrifugal distortions and shaft dynamic excursions avoids many of the problems associated with captured clearance designs. The sectored ring seal provides the desired self-adjusting clearance features. The general configuration of the sectored seal is shown on Figure 5-11. The sectors consist of T-shaped sections mated to each other at each end with sealed joints. The sectors can move relative to each other circumferentially and that is how the seal accommodates variations in the sleeve dimensions due to thermal expansions and contractions and centrifugal growths. The T-shaped sector was chosen because it is a symmetrical shape, and the various fluid and friction forces can be designed to avoid upsetting moments on the individual sectors. An overlapping V joint prevents a direct clearance path between the hydrogen and oxygen ends of the seal. Each sector is supported by a hydrostatic fluid-film on its inner circumference and along the side walls which forms a friction-free secondary seal to permit free radial motion of the sectors in response to sleeve movements. The fluid films are predominantly hydrostatic to avoid any pitching tendencies introduced by the hydrodynamic effects. The hydrostatic bearings are fed by the buffer pressure on the outside diameter of the seal. Figure 5-12 shows the pressure distribution and force balance on the individual sectors.

This sample problem describes one case conducted in the analysis of the circumferential hydrostatic seal on one of the sectors. The case is identified as IH55L.xxx in the diskette supplied to NASA. The geometry and operating conditions are as follows:

- Number of pads to be analyzed = 1
- OPTION = 2, i.e., the position of the sector to satisfy a given load will be determined
- Load applied = 370 lb
- Load angle from the x-axis = 270°
- Initial guess on the eccentricity of the seal = 0.5
- Initial guess on the eccentricity angle = 90°
- Variable grids are used in both the axial and circumferential directions. The grid is made very fine around the source points. The starting angle of the sector is 30° from the x-axis and its angular extent is 120°. The axial length of the seal is 1.627 in.
- Shaft diameter = 2.6798 in.
- Reference clearance = 0.001 in.
- Ratio of specific heat of the gas = 1.66
- Gas constant = 1,790,000 $in^2/(s^2\text{-}°R)$
- Absolute temperature = 528°R
- Gas viscosity = 2.9×10^{-9} $lb\text{-}s/in^2$
- Shaft speed = 0 rpm
- Reference pressure = 14.7 psig
- Boundary pressure surrounding the seal = 50 psig
- Cross-coupled stiffness and damping are to be computed at an excitation frequency of 0 rpm

- There are 6 discrete, inherently compensated source points in the sector of diameter = 0.020 in. The location of these orifices was determined from the design layout of the sector. The coefficient of discharge of each orifice is unity.
- Buffer pressure = 200 psig
- Flow is to be determined along four paths that make up the periphery of the seal
- The FILE option is to be exercised. A previous pressure distribution was read as the initial pressure distribution for this case. Convergence of the pressure is often difficult when solving source problems, whether they be inherently compensated sources or spot recesses. Convergence difficulties occur because sources present spikes in the pressure distribution and pressure gradients become very large. There are two methods for handling these problems that can be applied independently or jointly. The first is to use variable grid and fine grid spacing around the orifice holes. Each grid line around the hole should be at a distance of one to two orifice diameters in both the axial and circumferential directions. The other mechanism is to start the problem at low eccentricity and use the pressure distribution as an initial guess to get to the next eccentricity. Continue the process until the desired eccentricity is attained. To use a prior pressure distribution as a starting point, copy the file with the extension .HP to the name of the file being evaluated. For example, if the pressures from FILE1 are to be used as an initial distribution for FILE2, then prior to running FILE2, copy FILE1.HP to FILE2.HP and then run GCYLT FILE2. For this particular problem, both variable grid and the FILE option were used through a range of eccentricity ratios of 0,.1,.2,.3,.4,.5,. For the OS/2 operating system, a .CMD file was set up to automatically accomplish the eccentricity increases.

The input and output for this problem are shown on the following pages. This is followed by plots of the clearance and pressure distribution shown on Figures 5-13 and 5-14, respectively. As indicated on the last page of the output, the eccentricity of the sector to support the load is 0.6345 and the eccentricity angle is 90°. Note on the plots the fine grid work surrounding the orifice locations.

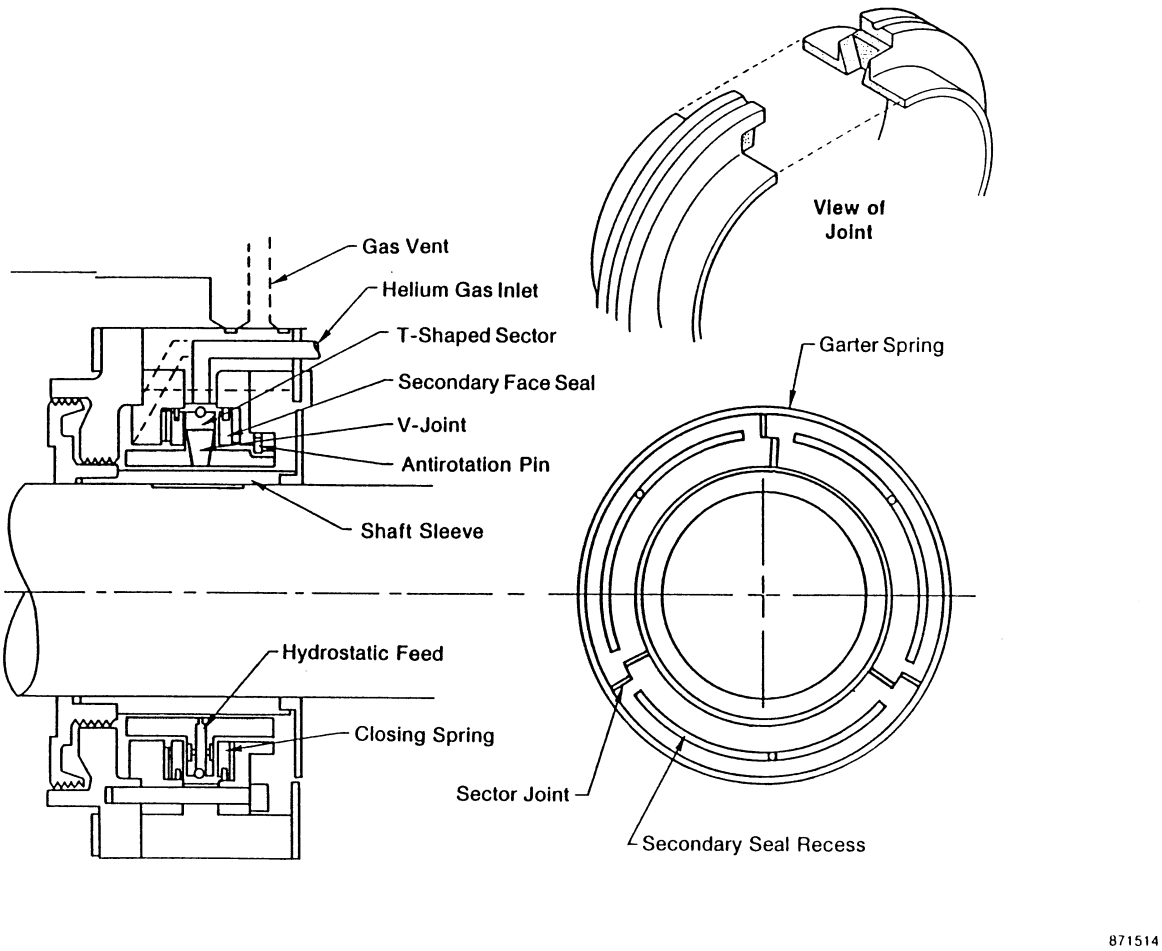

Figure 5-11. T-Shaped Sectored Ring Seal

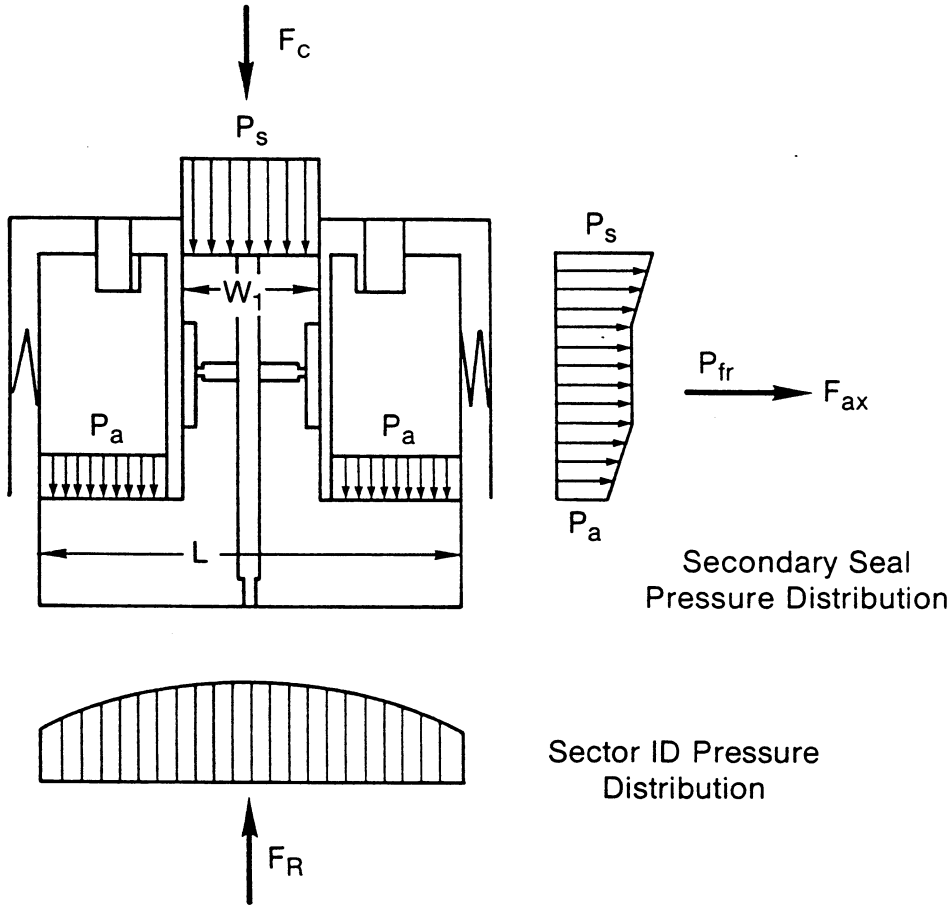

$$F_c = P_s A_s + P_a A_a$$

Radial Force Balance

$$F_R - F_c \pm F_f \pm F_r = 0$$

Axial Force Balance

$$F_{ax} - F_p - k_s \delta_a = 0$$

871511-1

Figure 5-12. Pressure Distribution and Force Balance, Sectored Seal

```
IH55L
NASA SECTORED SEAL INHERENT COMPENSATION,DRAWING DIMENSIONS,DO =.020 IN.
NPAD       1
OPTION     2
LOAD       370.
LOADANG    270.
ECC        0.5
ECCANGLE   90.0
VGRIDN     34
30. 33.9529 37.9057 41.8586 42.5 43.1414 49.0471 54.9529 60.8586 61.5
62.1414 68.0471 73.9529 79.8586 80.5 81.1414 87.0471 92.9529 98.8586
99.5 100.1414 106.0471 111.9529 117.8586 118.5 119.1414 125.0471
130.9529 136.8586 137.5 138.1414 142.0943 146.0471 150.0
VGRIDM     27
0. .0665 .1331 .1996 .2662 .3327 .3992 .4658 .5324 .5989 .6654 .7320
.7985 .8135 .8285 .8950 .9616 1.0281 1.0947 1.1612 1.2278 1.2943 1.3608
1.4274 1.4939 1.5605 1.6270
DIAMETER   2.6798
CLEARANCE  .001
SPHEAT     1.66
GASCONST   1790000.
ABSTEMP    528.
VISCOSITY  2.9E-09
SPEED      0.
ITERATION  15 5
TOLERANCE  .01 .01
PO         14.7
PTOP       50.
PBOT       50.
PLEFT      50.
PRITE      50.
*PRELOAD    0.5
*PIVOT      90.
STIFFNESS 4  .0001
SOURCE     6
14 5
14 10
14 15
14 20
14 25
14 30
DO         .020
CD         1.
PS         200.
FLOW       4.
1 1 27 1
1 34 27 34
1 1 1 34
27 1 27 34
FILE
END
```

```
GCYL      MTI     NASA SECTORED SEAL INHERENT COMPENSATION,DRAWING DIMENSIONS,DO
=.020 IN.


 ECHO OF INPUT

 NPAD       =    1          NUMBER OF PADS
 OPTION     =    2          GIVEN LOAD, LOAD ANGLE FIND EX, EY
 LOAD       =  370.0000     LOAD
 LOAD ANGLE=    270.00      LOAD ANGLE
 ECC        =    0.5000     ECCENTRICITY RATIO
 ECCANGLE   =     90.00     ECCENTRICITY ANGLE
 GRIDN      =   34          GRID POINTS IN CIRCUMFERENTIAL DIRECTION
 VGRIDN                     VARIABLE GRID IN CIRCUMFERENTIAL DIRECTION
    30.00       33.95        37.91       41.86       42.50
    43.14       49.05        54.95       60.86       61.50
    62.14       68.05        73.95       79.86       80.50
    81.14       87.05        92.95       98.86       99.50
    100.1       106.0        112.0       117.9       118.5
    119.1       125.0        131.0       136.9       137.5
    138.1       142.1        146.0       150.0
 GRIDM      =   27          GRID POINTS IN AXIAL DIRECTION
 VGRIDM                     VARIABLE GRID IN AXIAL DIRECTION
   0.0000E+00  0.6650E-01  0.1331      0.1996      0.2662
   0.3327      0.3992      0.4658      0.5324      0.5989
   0.6654      0.7320      0.7985      0.8135      0.8285
   0.8950      0.9616       1.028       1.095       1.161
    1.228       1.294       1.361       1.427       1.494
    1.561       1.627
 DIAMETER   =    2.6798     BEARING DIAMETER
 CLEARANCE =  0.001000      BEARING CLEARANCE
 SPECIFIC   =    1.6600     SPECIFIC HEAT RATIO
 GAS CONST = 1790000.0      GAS CONSTANT
 ABS TEMP   =    528.00     ABSOLUTE TEMPERATURE
 VISCOSITY =  0.2900E-08    ABSOLUTE VISCOSITY
 SPEED      =      0.00     ROTATIONAL SPEED IN RPM
 MXIT1      =  15.          (FOR COMPRESSIBILITY)
 MXIT2      =   5.          (FOR OPTION 2)
 TOL1       =    0.0100     TOLERANCE(COMPRESSIBILITY)
 TOL2       =    0.0100     ITERATION(OPTION 2)
 PO         =     14.70     REFERENCE(AMBIENT)  PRESSURE
 PTOP       =     50.00     GAGE PRESSURE AT TOP BOUNDARY
 PBOT       =     50.00     GAGE PRESSURE AT BOTTOM BOUNDARY
 PLEFT      =     50.00     GAGE PRESSURE AT LEFT BOUNDARY
 PRITE      =     50.00     GAGE PRESSURE AT RIGHT BOUNDARY
 *PRELOAD   0.5
 *PIVOT     90.
 ISTIF      =    1          STIFFNESS CALCULATION
 DEGREES OF FREEDOM =   4.
 EXCITATION SPEED, RPM  =       0.0001
 INHERENTLY COMPENSATED ORIFICES
 NUMBER OF SOURCES =   6
 SPECIFIED SOURCE AT I =  14  J =   5
 SPECIFIED SOURCE AT I =  14  J =  10
 SPECIFIED SOURCE AT I =  14  J =  15
 SPECIFIED SOURCE AT I =  14  J =  20
 SPECIFIED SOURCE AT I =  14  J =  25
 SPECIFIED SOURCE AT I =  14  J =  30
 DO         =    0.0200     ORIFICE DIAMETER
 CD         =    1.0000     DISCHARGE COEFFICIENT
 PS         =    200.00     SUPPLY PRESSURE(ORIFICE)
 FLOW RATE CALCULATION
 FLOW BETWEEN NODES   1.   1. AND  27.   1.
 FLOW BETWEEN NODES   1.  34. AND  27.  34.
 FLOW BETWEEN NODES   1.   1. AND   1.  34.
 FLOW BETWEEN NODES  27.   1. AND  27.  34.
```

```
FILE                    INITIAL PRESSURE FROM PREVIOUS RUN
END                     END OF INPUT
```



```
GCYL      MTI     NASA SECTORED SEAL INHERENT COMPENSATION,DRAWING DIMENSIONS,DO
=.020 IN.


 GAS JOURNAL BEARING/SEAL


 -BEARING GEOMETRY
  NUMBER OF PADS =     1
          LENGTH =     1.627 IN
        DIAMETER =     2.680 IN
       CLEARANCE =  0.001000 IN
  STARTING ANGLE =     30.00 DEG
       PAD ANGLE =    120.00 DEG

 -LUBRICANT PROPERTIES
               VISCOSITY =  0.2900000E-08 LB-S/IN**2
            GAS CONSTANT =   1790000.     IN**2/S**2-R
       ABS. TEMPERATURE =   528.0000     DEG R
    SPECIFIC HEAT RATIO =   1.660000

 -ORIFICE RELATED PROPERTIES
  ORIFICE
      NUMBER OF ORIFICES =         6
                DIAMETER =  0.2000000E-01 IN
          DISCHARGE COEF =   1.000000
         SUPPLY PRESSURE =   200.0000     PSI
***INHERENTLY COMPENSATED

 -BOUNDARY CONDITIONS
     REFERENCE P =   14.70000     PSI
           PLEFT =   50.00000     PSI
           PRITE =   50.00000     PSI
            PTOP =   50.00000     PSI
            PBOT =   50.00000     PSI
           SPEED =  0.0000000E+00 RPM

 -BEARING MODEL
               M =   27
               N =   34
          JOINED =    F
        SYMMETRY =    F

   Z -
   0.0000E+00  0.6650E-01  0.1331      0.1996      0.2662
   0.3327      0.3992      0.4658      0.5324      0.5989
   0.6654      0.7320      0.7985      0.8135      0.8285
   0.8950      0.9616       1.028       1.095       1.161
    1.228       1.294       1.361       1.427       1.494
    1.561       1.627

   THETA -
    30.00       33.95       37.91       41.86       42.50
    43.14       49.05       54.95       60.86       61.50
    62.14       68.05       73.95       79.86       80.50
    81.14       87.05       92.95       98.86       99.50
    100.1       106.0       112.0       117.9       118.5
    119.1       125.0       131.0       136.9       137.5
    138.1       142.1       146.0       150.0

 -MAXIMUM NUMBER OF ITERATIONS
    MXIT1 =   15       (FOR COMPRESSIBILITY)
    MXIT2 =    5       (FOR OPTION 2)

 -TOLERANCE
     TOL1 =   0.01000  (FOR COMPRESSIBILITY)
```

```
     TOL2 =   0.01000  (FOR OPTION 2)

-OPTION  =    2        GIVEN LOAD, LOAD ANGLE FIND SHAFT POSITION


SPECIFIED PRESSURE
    1 F F F F F F F F F F F F F F F F F F F F F F F F F F F
    2 F F F F F F F F F F F F F F F F F F F F F F F F F F F
    3 F F F F F F F F F F F F F F F F F F F F F F F F F F F
    4 F F F F F F F F F F F F F F F F F F F F F F F F F F F
    5 F F F F F F F F F F F F F F F F F F F F F F F F F F F
    6 F F F F F F F F F F F F F F F F F F F F F F F F F F F
    7 F F F F F F F F F F F F F F F F F F F F F F F F F F F
    8 F F F F F F F F F F F F F F F F F F F F F F F F F F F
    9 F F F F F F F F F F F F F F F F F F F F F F F F F F F
   10 F F F F F F F F F F F F F F F F F F F F F F F F F F F
   11 F F F F F F F F F F F F F F F F F F F F F F F F F F F
   12 F F F F F F F F F F F F F F F F F F F F F F F F F F F
   13 F F F F F F F F F F F F F F F F F F F F F F F F F F F
   14 F F F F F F F F F F F F F F F F F F F F F F F F F F F
   15 F F F F F F F F F F F F F F F F F F F F F F F F F F F
   16 F F F F F F F F F F F F F F F F F F F F F F F F F F F
   17 F F F F F F F F F F F F F F F F F F F F F F F F F F F
   18 F F F F F F F F F F F F F F F F F F F F F F F F F F F
   19 F F F F F F F F F F F F F F F F F F F F F F F F F F F
   20 F F F F F F F F F F F F F F F F F F F F F F F F F F F
   21 F F F F F F F F F F F F F F F F F F F F F F F F F F F
   22 F F F F F F F F F F F F F F F F F F F F F F F F F F F
   23 F F F F F F F F F F F F F F F F F F F F F F F F F F F
   24 F F F F F F F F F F F F F F F F F F F F F F F F F F F
   25 F F F F F F F F F F F F F F F F F F F F F F F F F F F
   26 F F F F F F F F F F F F F F F F F F F F F F F F F F F
   27 F F F F F F F F F F F F F F F F F F F F F F F F F F F
   28 F F F F F F F F F F F F F F F F F F F F F F F F F F F
   29 F F F F F F F F F F F F F F F F F F F F F F F F F F F
   30 F F F F F F F F F F F F F F F F F F F F F F F F F F F
   31 F F F F F F F F F F F F F F F F F F F F F F F F F F F
   32 F F F F F F F F F F F F F F F F F F F F F F F F F F F
   33 F F F F F F F F F F F F F F F F F F F F F F F F F F F
   34 F F F F F F F F F F F F F F F F F F F F F F F F F F F
```



```
GCYL      MTI     NASA SECTORED SEAL INHERENT COMPENSATION,DRAWING DIMENSIONS,DO
=.020 IN.


SPECIFIED SOURCE
    1 F F F F F F F F F F F F F F F F F F F F F F F F F F F
    2 F F F F F F F F F F F F F F F F F F F F F F F F F F F
    3 F F F F F F F F F F F F F F F F F F F F F F F F F F F
    4 F F F F F F F F F F F F F F F F F F F F F F F F F F F
    5 F F F F F F F F F F F F T F F F F F F F F F F F F F F
    6 F F F F F F F F F F F F F F F F F F F F F F F F F F F
    7 F F F F F F F F F F F F F F F F F F F F F F F F F F F
    8 F F F F F F F F F F F F F F F F F F F F F F F F F F F
    9 F F F F F F F F F F F F F F F F F F F F F F F F F F F
   10 F F F F F F F F F F F F T F F F F F F F F F F F F F F
   11 F F F F F F F F F F F F F F F F F F F F F F F F F F F
   12 F F F F F F F F F F F F F F F F F F F F F F F F F F F
   13 F F F F F F F F F F F F F F F F F F F F F F F F F F F
   14 F F F F F F F F F F F F F F F F F F F F F F F F F F F
   15 F F F F F F F F F F F F T F F F F F F F F F F F F F F
   16 F F F F F F F F F F F F F F F F F F F F F F F F F F F
   17 F F F F F F F F F F F F F F F F F F F F F F F F F F F
   18 F F F F F F F F F F F F F F F F F F F F F F F F F F F
   19 F F F F F F F F F F F F F F F F F F F F F F F F F F F
   20 F F F F F F F F F F F F T F F F F F F F F F F F F F F
   21 F F F F F F F F F F F F F F F F F F F F F F F F F F F
   22 F F F F F F F F F F F F F F F F F F F F F F F F F F F
   23 F F F F F F F F F F F F F F F F F F F F F F F F F F F
   24 F F F F F F F F F F F F F F F F F F F F F F F F F F F
   25 F F F F F F F F F F F F T F F F F F F F F F F F F F F
   26 F F F F F F F F F F F F F F F F F F F F F F F F F F F
   27 F F F F F F F F F F F F F F F F F F F F F F F F F F F
   28 F F F F F F F F F F F F F F F F F F F F F F F F F F F
   29 F F F F F F F F F F F F F F F F F F F F F F F F F F F
   30 F F F F F F F F F F F F T F F F F F F F F F F F F F F
   31 F F F F F F F F F F F F F F F F F F F F F F F F F F F
   32 F F F F F F F F F F F F F F F F F F F F F F F F F F F
   33 F F F F F F F F F F F F F F F F F F F F F F F F F F F
   34 F F F F F F F F F F F F F F F F F F F F F F F F F F F
PAD #  1  PRESSURE CALCULATION CONVERGED IN  2 ITERATIONS
PAD #  1  PRESSURE CALCULATION CONVERGED IN  1 ITERATIONS
PAD #  1  PRESSURE CALCULATION CONVERGED IN  1 ITERATIONS
PAD #  1  PRESSURE CALCULATION CONVERGED IN  2 ITERATIONS
```

NON-DIM CLEARANCE DISTRIBUTION(H/C) FOR PAD NUMBER 1

	I =	1	2	3	4	5	6
	AXIAL LENGTH IN.	0.000	0.067	0.133	0.200	0.266	0.333
J	DEG.						
1	30.0	0.683	0.683	0.683	0.683	0.683	0.683
2	34.0	0.646	0.646	0.646	0.646	0.646	0.646
3	37.9	0.610	0.610	0.610	0.610	0.610	0.610
4	41.9	0.577	0.577	0.577	0.577	0.577	0.577
5	42.5	0.571	0.571	0.571	0.571	0.571	0.571
6	43.1	0.566	0.566	0.566	0.566	0.566	0.566
7	49.0	0.521	0.521	0.521	0.521	0.521	0.521
8	55.0	0.481	0.481	0.481	0.481	0.481	0.481
9	60.9	0.446	0.446	0.446	0.446	0.446	0.446
10	61.5	0.442	0.442	0.442	0.442	0.442	0.442
11	62.1	0.439	0.439	0.439	0.439	0.439	0.439
12	68.0	0.411	0.411	0.411	0.411	0.411	0.411
13	74.0	0.390	0.390	0.390	0.390	0.390	0.390
14	79.9	0.375	0.375	0.375	0.375	0.375	0.375
15	80.5	0.374	0.374	0.374	0.374	0.374	0.374
16	81.1	0.373	0.373	0.373	0.373	0.373	0.373
17	87.0	0.366	0.366	0.366	0.366	0.366	0.366
18	93.0	0.366	0.366	0.366	0.366	0.366	0.366
19	98.9	0.373	0.373	0.373	0.373	0.373	0.373
20	99.5	0.374	0.374	0.374	0.374	0.374	0.374
21	100.1	0.375	0.375	0.375	0.375	0.375	0.375
22	106.0	0.390	0.390	0.390	0.390	0.390	0.390
23	112.0	0.411	0.411	0.411	0.411	0.411	0.411
24	117.9	0.439	0.439	0.439	0.439	0.439	0.439
25	118.5	0.442	0.442	0.442	0.442	0.442	0.442
26	119.1	0.446	0.446	0.446	0.446	0.446	0.446
27	125.0	0.481	0.481	0.481	0.481	0.481	0.481
28	131.0	0.521	0.521	0.521	0.521	0.521	0.521
29	136.9	0.566	0.566	0.566	0.566	0.566	0.566
30	137.5	0.571	0.571	0.571	0.571	0.571	0.571
31	138.1	0.577	0.577	0.577	0.577	0.577	0.577
32	142.1	0.610	0.610	0.610	0.610	0.610	0.610
33	146.0	0.646	0.646	0.646	0.646	0.646	0.646
34	150.0	0.683	0.683	0.683	0.683	0.683	0.683

NON-DIM CLEARANCE DISTRIBUTION(H/C) FOR PAD NUMBER 1

	I =	7	8	9	10	11	12
	AXIAL LENGTH IN.	0.399	0.466	0.532	0.599	0.665	0.732
J	DEG.						
1	30.0	0.683	0.683	0.683	0.683	0.683	0.683
2	34.0	0.646	0.646	0.646	0.646	0.646	0.646
3	37.9	0.610	0.610	0.610	0.610	0.610	0.610
4	41.9	0.577	0.577	0.577	0.577	0.577	0.577
5	42.5	0.571	0.571	0.571	0.571	0.571	0.571
6	43.1	0.566	0.566	0.566	0.566	0.566	0.566
7	49.0	0.521	0.521	0.521	0.521	0.521	0.521
8	55.0	0.481	0.481	0.481	0.481	0.481	0.481
9	60.9	0.446	0.446	0.446	0.446	0.446	0.446
10	61.5	0.442	0.442	0.442	0.442	0.442	0.442
11	62.1	0.439	0.439	0.439	0.439	0.439	0.439
12	68.0	0.411	0.411	0.411	0.411	0.411	0.411
13	74.0	0.390	0.390	0.390	0.390	0.390	0.390
14	79.9	0.375	0.375	0.375	0.375	0.375	0.375
15	80.5	0.374	0.374	0.374	0.374	0.374	0.374
16	81.1	0.373	0.373	0.373	0.373	0.373	0.373
17	87.0	0.366	0.366	0.366	0.366	0.366	0.366
18	93.0	0.366	0.366	0.366	0.366	0.366	0.366
19	98.9	0.373	0.373	0.373	0.373	0.373	0.373
20	99.5	0.374	0.374	0.374	0.374	0.374	0.374
21	100.1	0.375	0.375	0.375	0.375	0.375	0.375
22	106.0	0.390	0.390	0.390	0.390	0.390	0.390
23	112.0	0.411	0.411	0.411	0.411	0.411	0.411
24	117.9	0.439	0.439	0.439	0.439	0.439	0.439
25	118.5	0.442	0.442	0.442	0.442	0.442	0.442
26	119.1	0.446	0.446	0.446	0.446	0.446	0.446
27	125.0	0.481	0.481	0.481	0.481	0.481	0.481
28	131.0	0.521	0.521	0.521	0.521	0.521	0.521
29	136.9	0.566	0.566	0.566	0.566	0.566	0.566
30	137.5	0.571	0.571	0.571	0.571	0.571	0.571
31	138.1	0.577	0.577	0.577	0.577	0.577	0.577
32	142.1	0.610	0.610	0.610	0.610	0.610	0.610
33	146.0	0.646	0.646	0.646	0.646	0.646	0.646
34	150.0	0.683	0.683	0.683	0.683	0.683	0.683

NON-DIM CLEARANCE DISTRIBUTION(H/C) FOR PAD NUMBER 1

	I =	13	14	15	16	17	18
	AXIAL LENGTH IN.	0.799	0.814	0.829	0.895	0.962	1.028
J	DEG.						
1	30.0	0.683	0.683	0.683	0.683	0.683	0.683
2	34.0	0.646	0.646	0.646	0.646	0.646	0.646
3	37.9	0.610	0.610	0.610	0.610	0.610	0.610
4	41.9	0.577	0.577	0.577	0.577	0.577	0.577
5	42.5	0.571	0.571	0.571	0.571	0.571	0.571
6	43.1	0.566	0.566	0.566	0.566	0.566	0.566
7	49.0	0.521	0.521	0.521	0.521	0.521	0.521
8	55.0	0.481	0.481	0.481	0.481	0.481	0.481
9	60.9	0.446	0.446	0.446	0.446	0.446	0.446
10	61.5	0.442	0.442	0.442	0.442	0.442	0.442
11	62.1	0.439	0.439	0.439	0.439	0.439	0.439
12	68.0	0.411	0.411	0.411	0.411	0.411	0.411
13	74.0	0.390	0.390	0.390	0.390	0.390	0.390
14	79.9	0.375	0.375	0.375	0.375	0.375	0.375
15	80.5	0.374	0.374	0.374	0.374	0.374	0.374
16	81.1	0.373	0.373	0.373	0.373	0.373	0.373
17	87.0	0.366	0.366	0.366	0.366	0.366	0.366
18	93.0	0.366	0.366	0.366	0.366	0.366	0.366
19	98.9	0.373	0.373	0.373	0.373	0.373	0.373
20	99.5	0.374	0.374	0.374	0.374	0.374	0.374
21	100.1	0.375	0.375	0.375	0.375	0.375	0.375
22	106.0	0.390	0.390	0.390	0.390	0.390	0.390
23	112.0	0.411	0.411	0.411	0.411	0.411	0.411
24	117.9	0.439	0.439	0.439	0.439	0.439	0.439
25	118.5	0.442	0.442	0.442	0.442	0.442	0.442
26	119.1	0.446	0.446	0.446	0.446	0.446	0.446
27	125.0	0.481	0.481	0.481	0.481	0.481	0.481
28	131.0	0.521	0.521	0.521	0.521	0.521	0.521
29	136.9	0.566	0.566	0.566	0.566	0.566	0.566
30	137.5	0.571	0.571	0.571	0.571	0.571	0.571
31	138.1	0.577	0.577	0.577	0.577	0.577	0.577
32	142.1	0.610	0.610	0.610	0.610	0.610	0.610
33	146.0	0.646	0.646	0.646	0.646	0.646	0.646
34	150.0	0.683	0.683	0.683	0.683	0.683	0.683

NON-DIM CLEARANCE DISTRIBUTION(H/C) FOR PAD NUMBER 1

	I =	19	20	21	22	23	24
	AXIAL LENGTH IN.	1.095	1.161	1.228	1.294	1.361	1.427
J	DEG.						
1	30.0	0.683	0.683	0.683	0.683	0.683	0.683
2	34.0	0.646	0.646	0.646	0.646	0.646	0.646
3	37.9	0.610	0.610	0.610	0.610	0.610	0.610
4	41.9	0.577	0.577	0.577	0.577	0.577	0.577
5	42.5	0.571	0.571	0.571	0.571	0.571	0.571
6	43.1	0.566	0.566	0.566	0.566	0.566	0.566
7	49.0	0.521	0.521	0.521	0.521	0.521	0.521
8	55.0	0.481	0.481	0.481	0.481	0.481	0.481
9	60.9	0.446	0.446	0.446	0.446	0.446	0.446
10	61.5	0.442	0.442	0.442	0.442	0.442	0.442
11	62.1	0.439	0.439	0.439	0.439	0.439	0.439
12	68.0	0.411	0.411	0.411	0.411	0.411	0.411
13	74.0	0.390	0.390	0.390	0.390	0.390	0.390
14	79.9	0.375	0.375	0.375	0.375	0.375	0.375
15	80.5	0.374	0.374	0.374	0.374	0.374	0.374
16	81.1	0.373	0.373	0.373	0.373	0.373	0.373
17	87.0	0.366	0.366	0.366	0.366	0.366	0.366
18	93.0	0.366	0.366	0.366	0.366	0.366	0.366
19	98.9	0.373	0.373	0.373	0.373	0.373	0.373
20	99.5	0.374	0.374	0.374	0.374	0.374	0.374
21	100.1	0.375	0.375	0.375	0.375	0.375	0.375
22	106.0	0.390	0.390	0.390	0.390	0.390	0.390
23	112.0	0.411	0.411	0.411	0.411	0.411	0.411
24	117.9	0.439	0.439	0.439	0.439	0.439	0.439
25	118.5	0.442	0.442	0.442	0.442	0.442	0.442
26	119.1	0.446	0.446	0.446	0.446	0.446	0.446
27	125.0	0.481	0.481	0.481	0.481	0.481	0.481
28	131.0	0.521	0.521	0.521	0.521	0.521	0.521
29	136.9	0.566	0.566	0.566	0.566	0.566	0.566
30	137.5	0.571	0.571	0.571	0.571	0.571	0.571
31	138.1	0.577	0.577	0.577	0.577	0.577	0.577
32	142.1	0.610	0.610	0.610	0.610	0.610	0.610
33	146.0	0.646	0.646	0.646	0.646	0.646	0.646
34	150.0	0.683	0.683	0.683	0.683	0.683	0.683

NON-DIM CLEARANCE DISTRIBUTION(H/C) FOR PAD NUMBER 1

J	DEG.	I = 25	26	27
	AXIAL LENGTH IN.	1.494	1.561	1.627
1	30.0	0.683	0.683	0.683
2	34.0	0.646	0.646	0.646
3	37.9	0.610	0.610	0.610
4	41.9	0.577	0.577	0.577
5	42.5	0.571	0.571	0.571
6	43.1	0.566	0.566	0.566
7	49.0	0.521	0.521	0.521
8	55.0	0.481	0.481	0.481
9	60.9	0.446	0.446	0.446
10	61.5	0.442	0.442	0.442
11	62.1	0.439	0.439	0.439
12	68.0	0.411	0.411	0.411
13	74.0	0.390	0.390	0.390
14	79.9	0.375	0.375	0.375
15	80.5	0.374	0.374	0.374
16	81.1	0.373	0.373	0.373
17	87.0	0.366	0.366	0.366
18	93.0	0.366	0.366	0.366
19	98.9	0.373	0.373	0.373
20	99.5	0.374	0.374	0.374
21	100.1	0.375	0.375	0.375
22	106.0	0.390	0.390	0.390
23	112.0	0.411	0.411	0.411
24	117.9	0.439	0.439	0.439
25	118.5	0.442	0.442	0.442
26	119.1	0.446	0.446	0.446
27	125.0	0.481	0.481	0.481
28	131.0	0.521	0.521	0.521
29	136.9	0.566	0.566	0.566
30	137.5	0.571	0.571	0.571
31	138.1	0.577	0.577	0.577
32	142.1	0.610	0.610	0.610
33	146.0	0.646	0.646	0.646
34	150.0	0.683	0.683	0.683

MIN. CLEAR.= 0.36631 AT 87.047 DEGREES

MAX. CLEAR.= 0.68273 AT 150.00 DEGREES

PRESSURE DISTRIBUTION (PSI) FOR PAD NUMBER 1

J	DEG.	I = 1	2	3	4	5	6
	AXIAL LENGTH IN.	0.000	0.067	0.133	0.200	0.266	0.333
1	30.0	50.0	50.0	50.0	50.0	50.0	50.0
2	34.0	50.0	51.3	52.6	53.9	55.4	57.0
3	37.9	50.0	52.7	55.3	58.0	60.9	64.0
4	41.9	50.0	54.1	58.1	62.1	66.2	70.6
5	42.5	50.0	54.3	58.5	62.7	67.0	71.6
6	43.1	50.0	54.5	58.9	63.3	67.8	72.6
7	49.0	50.0	56.6	62.8	68.8	74.7	80.8
8	55.0	50.0	58.5	66.3	73.6	80.6	87.6
9	60.9	50.0	60.1	69.2	77.6	85.6	93.4
10	61.5	50.0	60.3	69.5	78.0	86.1	93.9
11	62.1	50.0	60.5	69.8	78.4	86.5	94.5
12	68.0	50.0	61.7	72.0	81.4	90.1	98.5
13	74.0	50.0	62.7	73.7	83.7	92.9	102.
14	79.9	50.0	63.4	74.9	85.3	94.8	104.
15	80.5	50.0	63.5	75.0	85.4	95.0	104.
16	81.1	50.0	63.5	75.1	85.5	95.1	104.
17	87.0	50.0	63.8	75.7	86.2	95.9	105.
18	93.0	50.0	63.8	75.7	86.2	95.9	105.
19	98.9	50.0	63.5	75.1	85.5	95.1	104.
20	99.5	50.0	63.5	75.0	85.4	95.0	104.
21	100.1	50.0	63.4	74.9	85.3	94.8	104.
22	106.0	50.0	62.7	73.7	83.7	92.9	102.
23	112.0	50.0	61.7	72.0	81.4	90.1	98.5
24	117.9	50.0	60.5	69.8	78.4	86.5	94.5
25	118.5	50.0	60.3	69.5	78.0	86.1	93.9
26	119.1	50.0	60.1	69.2	77.6	85.6	93.4
27	125.0	50.0	58.5	66.3	73.6	80.6	87.6
28	131.0	50.0	56.6	62.8	68.8	74.7	80.8
29	136.9	50.0	54.5	58.9	63.3	67.8	72.6
30	137.5	50.0	54.3	58.5	62.7	67.0	71.6
31	138.1	50.0	54.1	58.1	62.1	66.2	70.6
32	142.1	50.0	52.7	55.3	58.0	60.9	64.0
33	146.0	50.0	51.3	52.6	53.9	55.4	57.0
34	150.0	50.0	50.0	50.0	50.0	50.0	50.0

07/08/1994 14:03 Filename: IH55L.OUT Page 13

PRESSURE DISTRIBUTION (PSI) FOR PAD NUMBER 1

	I =	7	8	9	10	11	12
	AXIAL LENGTH IN.	0.399	0.466	0.532	0.599	0.665	0.732
J	DEG.						
1	30.0	50.0	50.0	50.0	50.0	50.0	50.0
2	34.0	58.9	61.1	63.6	66.4	69.5	72.3
3	37.9	67.6	71.6	76.3	81.7	88.0	94.7
4	41.9	75.5	80.9	87.3	95.0	105.	118.
5	42.5	76.6	82.3	88.8	96.7	107.	120.
6	43.1	77.8	83.6	90.2	98.3	108.	122.
7	49.0	87.0	93.5	100.	107.	114.	121.
8	55.0	94.6	102.	109.	116.	123.	129.
9	60.9	101.	109.	117.	126.	136.	147.
10	61.5	102.	110.	118.	127.	137.	148.
11	62.1	102.	110.	119.	127.	137.	149.
12	68.0	107.	115.	122.	130.	137.	143.
13	74.0	110.	118.	126.	133.	140.	146.
14	79.9	112.	121.	129.	138.	147.	158.
15	80.5	113.	121.	130.	138.	148.	158.
16	81.1	113.	121.	130.	138.	148.	158.
17	87.0	114.	122.	130.	137.	144.	150.
18	93.0	114.	122.	130.	137.	144.	150.
19	98.9	113.	121.	130.	138.	148.	158.
20	99.5	113.	121.	130.	138.	148.	158.
21	100.1	112.	121.	129.	138.	147.	158.
22	106.0	110.	118.	126.	133.	140.	146.
23	112.0	107.	115.	122.	130.	137.	143.
24	117.9	102.	110.	119.	127.	137.	149.
25	118.5	102.	110.	118.	127.	137.	148.
26	119.1	101.	109.	117.	126.	136.	147.
27	125.0	94.6	102.	109.	116.	123.	129.
28	131.0	87.0	93.5	100.	107.	114.	121.
29	136.9	77.8	83.6	90.2	98.3	108.	122.
30	137.5	76.6	82.3	88.8	96.7	107.	120.
31	138.1	75.5	80.9	87.3	95.0	105.	118.
32	142.1	67.6	71.6	76.3	81.7	88.0	94.7
33	146.0	58.9	61.1	63.6	66.4	69.5	72.3
34	150.0	50.0	50.0	50.0	50.0	50.0	50.0

07/08/1994 14:03 Filename: IH55L.OUT Page 14

PRESSURE DISTRIBUTION (PSI) FOR PAD NUMBER 1

	I =	13	14	15	16	17	18
	AXIAL LENGTH IN.	0.799	0.814	0.829	0.895	0.962	1.028
J	DEG.						
1	30.0	50.0	50.0	50.0	50.0	50.0	50.0
2	34.0	74.1	74.2	74.1	72.3	69.5	66.4
3	37.9	100.	100.	100.	94.7	88.0	81.7
4	41.9	137.	141.	137.	118.	105.	95.0
5	42.5	144.	178.	144.	120.	107.	96.7
6	43.1	141.	144.	141.	122.	108.	98.2
7	49.0	125.	125.	125.	121.	114.	107.
8	55.0	132.	133.	132.	129.	123.	116.
9	60.9	162.	164.	162.	147.	136.	126.
10	61.5	167.	193.	167.	148.	137.	127.
11	62.1	164.	167.	164.	149.	137.	127.
12	68.0	147.	147.	147.	143.	137.	130.
13	74.0	149.	149.	149.	146.	140.	133.
14	79.9	171.	173.	171.	158.	147.	138.
15	80.5	175.	197.	175.	158.	148.	138.
16	81.1	172.	174.	172.	158.	148.	138.
17	87.0	153.	153.	153.	150.	144.	137.
18	93.0	153.	153.	153.	150.	144.	137.
19	98.9	172.	174.	172.	158.	148.	138.
20	99.5	175.	197.	175.	158.	148.	138.
21	100.1	171.	173.	171.	158.	147.	138.
22	106.0	149.	149.	149.	146.	140.	133.
23	112.0	147.	147.	147.	143.	137.	130.
24	117.9	164.	167.	164.	149.	137.	127.
25	118.5	167.	193.	167.	148.	137.	127.
26	119.1	162.	164.	162.	147.	136.	126.
27	125.0	132.	133.	132.	129.	123.	116.
28	131.0	125.	125.	125.	121.	114.	107.
29	136.9	141.	144.	141.	122.	108.	98.2
30	137.5	144.	178.	144.	120.	107.	96.7
31	138.1	137.	141.	137.	118.	105.	95.0
32	142.1	100.	100.	100.	94.7	88.0	81.7
33	146.0	74.1	74.2	74.1	72.3	69.5	66.4
34	150.0	50.0	50.0	50.0	50.0	50.0	50.0

PRESSURE DISTRIBUTION (PSI) FOR PAD NUMBER 1

	I =	19	20	21	22	23	24
AXIAL LENGTH IN.		1.095	1.161	1.228	1.294	1.361	1.427
J	DEG.						
1	30.0	50.0	50.0	50.0	50.0	50.0	50.0
2	34.0	63.6	61.1	58.9	57.0	55.4	53.9
3	37.9	76.2	71.6	67.6	64.0	60.9	58.0
4	41.9	87.3	80.9	75.5	70.6	66.2	62.1
5	42.5	88.8	82.3	76.6	71.6	67.0	62.7
6	43.1	90.2	83.6	77.8	72.6	67.8	63.3
7	49.0	100.	93.5	87.0	80.8	74.7	68.8
8	55.0	109.	102.	94.6	87.6	80.6	73.6
9	60.9	117.	109.	101.	93.4	85.6	77.6
10	61.5	118.	110.	102.	93.9	86.1	78.0
11	62.1	119.	110.	102.	94.5	86.5	78.4
12	68.0	122.	115.	107.	98.5	90.1	81.4
13	74.0	126.	118.	110.	102.	92.9	83.7
14	79.9	129.	121.	112.	104.	94.8	85.3
15	80.5	130.	121.	113.	104.	95.0	85.4
16	81.1	130.	121.	113.	104.	95.1	85.5
17	87.0	130.	122.	114.	105.	95.9	86.2
18	93.0	130.	122.	114.	105.	95.9	86.2
19	98.9	130.	121.	113.	104.	95.1	85.5
20	99.5	130.	121.	113.	104.	95.0	85.4
21	100.1	129.	121.	112.	104.	94.8	85.3
22	106.0	126.	118.	110.	102.	92.9	83.7
23	112.0	122.	115.	107.	98.5	90.1	81.4
24	117.9	119.	110.	102.	94.5	86.5	78.4
25	118.5	118.	110.	102.	93.9	86.1	78.0
26	119.1	117.	109.	101.	93.4	85.6	77.6
27	125.0	109.	102.	94.6	87.6	80.6	73.6
28	131.0	100.	93.5	87.0	80.8	74.7	68.8
29	136.9	90.2	83.6	77.8	72.6	67.8	63.3
30	137.5	88.8	82.3	76.6	71.6	67.0	62.7
31	138.1	87.3	80.9	75.5	70.6	66.2	62.1
32	142.1	76.2	71.6	67.6	64.0	60.9	58.0
33	146.0	63.6	61.1	58.9	57.0	55.4	53.9
34	150.0	50.0	50.0	50.0	50.0	50.0	50.0

PRESSURE DISTRIBUTION (PSI) FOR PAD NUMBER 1

	I =	25	26	27
AXIAL LENGTH IN.		1.494	1.561	1.627
J	DEG.			
1	30.0	50.0	50.0	50.0
2	34.0	52.6	51.3	50.0
3	37.9	55.3	52.7	50.0
4	41.9	58.1	54.1	50.0
5	42.5	58.5	54.3	50.0
6	43.1	58.9	54.5	50.0
7	49.0	62.8	56.6	50.0
8	55.0	66.3	58.5	50.0
9	60.9	69.2	60.1	50.0
10	61.5	69.5	60.3	50.0
11	62.1	69.8	60.5	50.0
12	68.0	72.0	61.7	50.0
13	74.0	73.7	62.7	50.0
14	79.9	74.9	63.4	50.0
15	80.5	75.0	63.5	50.0
16	81.1	75.1	63.5	50.0
17	87.0	75.7	63.8	50.0
18	93.0	75.7	63.8	50.0
19	98.9	75.1	63.5	50.0
20	99.5	75.0	63.5	50.0
21	100.1	74.9	63.4	50.0
22	106.0	73.7	62.7	50.0
23	112.0	72.0	61.7	50.0
24	117.9	69.8	60.5	50.0
25	118.5	69.5	60.3	50.0
26	119.1	69.2	60.1	50.0
27	125.0	66.3	58.5	50.0
28	131.0	62.8	56.6	50.0
29	136.9	58.9	54.5	50.0
30	137.5	58.5	54.3	50.0
31	138.1	58.1	54.1	50.0
32	142.1	55.3	52.7	50.0
33	146.0	52.6	51.3	50.0
34	150.0	50.0	50.0	50.0

MIN. PRESS= 50.000 AT 150.00 DEGREES

MAX. PRESS= 197.46 AT 80.500 DEGREES

```
GCYL      MTI     NASA SECTORED SEAL INHERENT COMPENSATION,DRAWING DIMENSIONS,DO
=.020 IN.


 -JOURNAL & LOAD POSITION
   ECCENTRICITY            =     0.63453
   ECCENTRICITY ANGLE      =       90.00 DEG
   MINIMUM FILM            =   0.0003663 IN
   LOAD                    =   370.0     LB
   LOAD ANGLE              =      -90.00 DEG

   POWER LOSS              =  0.0000E+00 HP

   LEAKAGE AT I = 1        =-0.25673E-04 LB/S

   LEAKAGE AT I = M        = 0.25673E-04 LB/S

 -STIFFNESS COEFFICIENTS
   PRINCIPAL  X       KXX =  0.4032E+05 LB/IN
   CROSS-COUPLED      KXY = -0.2428E-07 LB/IN
   CROSS-COUPLED      KXA = -0.2531E-07 LB/RAD
   CROSS-COUPLED      KXB =  0.2009E-02 LB/RAD
   CROSS-COUPLED      KYX =  -141.6     LB/IN
   PRINCIPAL  Y       KYY =  0.2429E+05 LB/IN
   CROSS-COUPLED      KYA =  -391.7     LB/RAD
   CROSS-COUPLED      KYB =  -74.14     LB/RAD
   CROSS-COUPLED      KAX =  0.8476E-06 IN-LB/IN
   CROSS-COUPLED      KAY = -0.4463E-02 IN-LB/IN
   PRINCIPAL  A       KAA =  0.5055E+05 IN-LB/RAD
   CROSS-COUPLED      KAB = -0.5231E-06 IN-LB/RAD
   CROSS-COUPLED      KBX =  0.1525E-02 IN-LB/IN
   CROSS-COUPLED      KBY =  0.1127E-07 IN-LB/IN
   CROSS-COUPLED      KBA = -0.4153E-08 IN-LB/RAD
   PRINCIPAL  B       KBB =  0.1099E+05 IN-LB/RAD

 -DAMPING COEFFICIENTS
   PRINCIPAL  X       DXX =   15.89     LB-S/IN
   CROSS-COUPLED      DXY =  0.3707E-10 LB-S/IN
   CROSS-COUPLED      DXA =  0.3617E-11 LB-S/RAD
   CROSS-COUPLED      DXB =  0.5322E-06 LB-S/RAD
   CROSS-COUPLED      DYX =  0.2025E-01 LB-S/IN
   PRINCIPAL  Y       DYY =   128.5     LB-S/IN
   CROSS-COUPLED      DYA =  0.6261E-01 LB-S/RAD
   CROSS-COUPLED      DYB =  0.1058E-01 LB-S/RAD
   CROSS-COUPLED      DAX =  0.9535E-10 IN-LB-S/IN
   CROSS-COUPLED      DAY =  0.1738E-05 IN-LB-S/IN
   PRINCIPAL  A       DAA =   7.329     IN-LB-S/RAD
   CROSS-COUPLED      DAB = -0.5647E-09 IN-LB-S/RAD
   CROSS-COUPLED      DBX = -0.4686E-06 IN-LB-S/IN
   CROSS-COUPLED      DBY = -0.5672E-12 IN-LB-S/IN
   CROSS-COUPLED      DBA = -0.2274E-11 IN-LB-S/RAD
   PRINCIPAL  B       DBB =   1.288     IN-LB-S/RAD

 -RIGHTING MOMENT
   ABOUT X-X          MX =  0.2995E-05 LB-IN
   ABOUT Y-Y          MY =  0.2342E-14 LB-IN


 -FLOW THRU SPECIFIED GRID LINE
  FROM   1   1  TO  27   1    FLOW= -0.4651E-04 LB/S


 -FLOW THRU SPECIFIED GRID LINE
  FROM   1  34  TO  27  34    FLOW=  0.4651E-04 LB/S
```



```
 -FLOW THRU SPECIFIED GRID LINE
  FROM   1   1  TO   1  34    FLOW= -0.2567E-04 LB/S


 -FLOW THRU SPECIFIED GRID LINE
  FROM  27   1  TO  27  34    FLOW=  0.2567E-04 LB/S
```

```
GCYL      MTI     NASA SECTORED SEAL INHERENT COMPENSATION,DRAWING DIMENSIONS,DO
=.020 IN.

 ECHO OF INPUT

NO MORE INPUT, PROGRAM TERMINATED
```

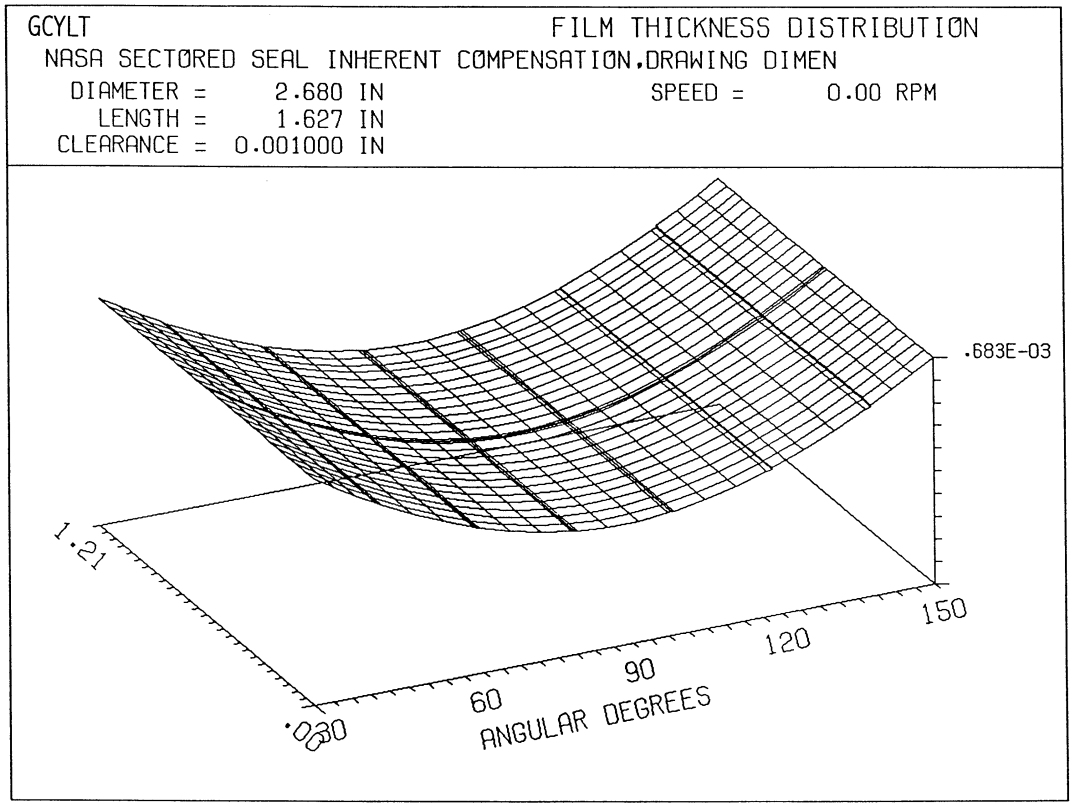

94TM10

Figure 5-13. Clearance Distribution, Sectored Seal

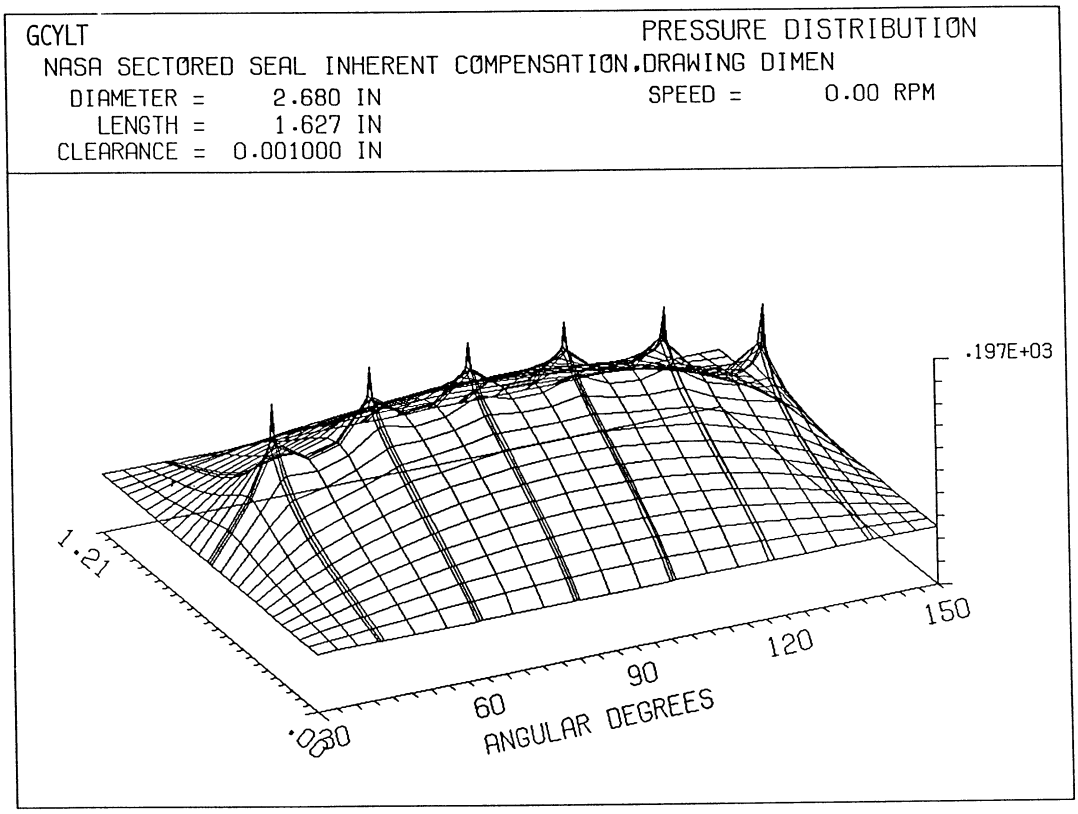

Figure 5-14. Pressure Distribution, Sectored Seal

5.5 Sample Problem 5 - Rayleigh-Step, Floating-Ring Seal

This example represents another buffer fluid seal that was designed for use in the SSME. The principle of operation of a hydrodynamic, lift-pad, floating-ring seal is illustrated on Figure 5-15. The seal consists of two rings that are mounted back-to-back. The buffer fluid enters between the rings and forces the rings up against the stationary housing. The buffer fluid leaks into the clearance annulus between the shaft and the seal and prevents ingress of exterior fluid on either side of the floating-ring assembly. The rings are held in equilibrium by a number of forces, as shown on Figure 5-15. F_c is a pressure force from the inlet buffer fluid that forces the rings up against the housings. This pressure force is partially balanced on the housing sides of the rings by undercutting and exposing the housing sides of the rings to buffer pressure. This balance force is identified as F_B. F_H represents a hydrodynamic force that is generated by rotation between the shaft and ring. The net hydrodynamic force is zero when the shaft and rings are in the concentric position. However, when the ring becomes eccentric with respect to the shaft, a hydrodynamic force is built up that opposes the eccentricity. There is also a normal force, F_N, acting on the ring at the contact area between the ring and the housing. In addition to the equilibrium forces mentioned above, there is a friction force, F_f, between the seal ring and housing.

Figure 5-16 shows the hydrodynamic geometry that is incorporated into the bore of the seal rings. A portion of the length of the bore is segregated into sectors, and these sectors are separated from one another by axial grooves. A circumferential groove that goes completely around the bore is installed upstream of the final seal dam region. At the interior of the sectors, Rayleigh-step pockets are machined. The velocity direction of the shaft is such that it produces hydrodynamic pressures due to pumping of the fluid over the Rayleigh-step. The sealing occurs across the dam which is a narrow annulus of low clearance exposed to high pressure at its interior circumferential groove and to lower pressure at its outboard end. The shaded regions on Figure 5-16 indicate depressions from grooves and Rayleigh-step pockets.

In this example, one pad of the Rayleigh-step interface was examined from the high-pressure interior end to the low-pressure exterior end. This problem is identified as RSEX1.xxx in the diskette supplied to NASA. The high-pressure end is at the bottom end of the grid (I = 1). Geometric and operating parameters are as follows:

- International units are to be used
- NPAD = 1 because we are examining the performance of one pad only, which is represented on the grid as a 90° arc from the center of one axial groove to the next. Thus, the pad angle is 90°. The pad starts at 0°. Also, the boundary conditions at the circumferential ends of the single pad must be periodic, i.e., all pads will act identically, which will occur when the shaft is in the concentric position. Periodicity is invoked by applying the JOINED parameter.
- Shaft diameter = .05 m
- Total seal length = 0.0123 m
- Seal clearance = 1.27×10^{-5} m
- Step height = 2.54×10^{-5} m
- Gas viscosity = 2.19×10^{-5} N-s/m^2

- Absolute temperature = 338.6°K
- Ratio of specific heat = 1.66
- Gas constant = 1154.8364 m^2 $m^2/(s^2\text{-}°K)$
- Shaft speed = 70,000 rpm
- Reference pressure = 101,352.93 Pa
- The high pressure to be sealed is 1.37895 x 10^6 Pa, which would be at the bottom of the grid. The remaining boundaries are at 0 psig.

In this example, advantage is taken of inputting constant pressure regions for the inlet grooves of sequential pads and the circumferential exterior grooves. There are three regions; thus, PCON has a value of 3. Their corner locations are identified in the input tabulation following Figure 5-15.

Following the output are the 3-D plots of the clearance and pressure distribution (Figures 5-17 and 5-18, respectively). Note on Figure 5-17 that the high ambient pressures in the groove regions overshadow the contribution from the Rayleigh-step.

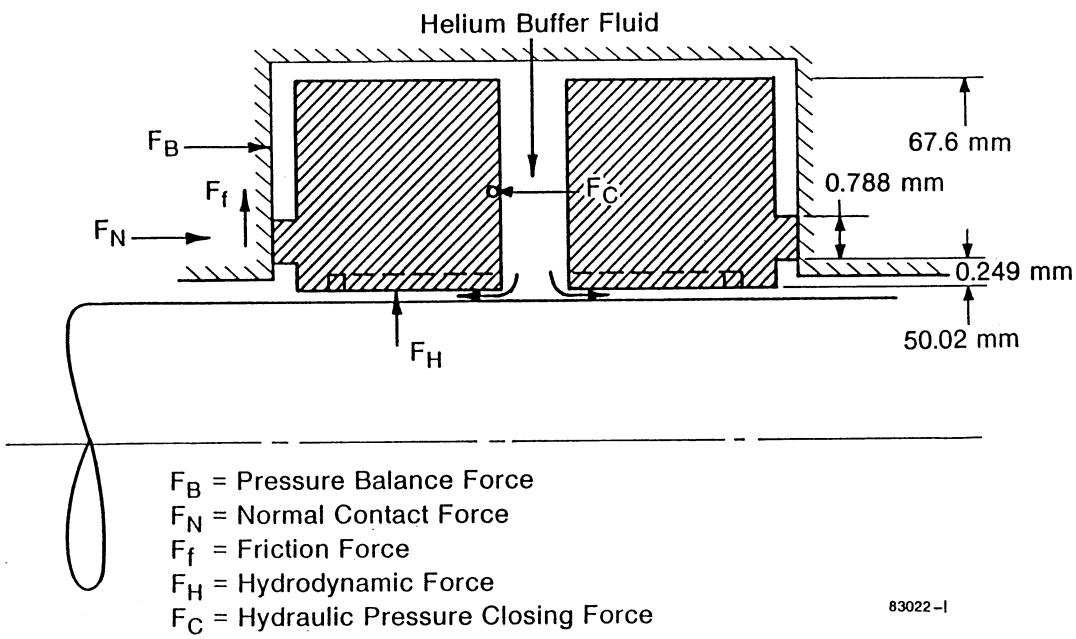

Figure 5-15. Rayleigh-Step, Floating Ring Seal

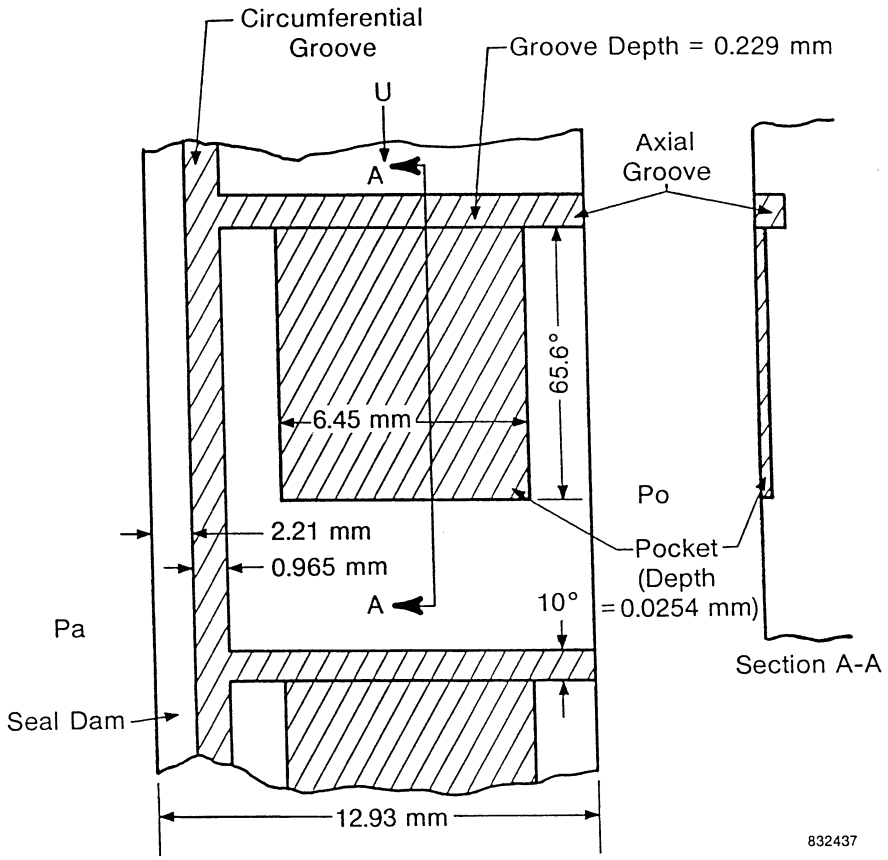

Figure 5-16. Developed View of 50-mm Rayleigh-Step Pad

```
RSEX1C
RAYLEIGH - STEP SEAL PROBLEM
OPTION      1
SI
NPAD      1
START     0.0
PADANGLE  90.
DIAMETER  0.05
LENGTH    .0123
CLEARANCE 1.27E-005
GRIDN     45
GRIDM     30
STEP      1
5  3  19  36  2.54E-005
VISCOSITY    2.19E-005
ABSTEMP      338.6
SPHEAT       1.66
GASCONST     1154.8364
JOINED
ITERATION 15
TOLERANCE .01
ECC       0.0
ECCANGLE  0.0
SPEED     70000.
PO        101352.93
PLEFT     0.0
PRITE     0.0
PTOP      0.0
PBOT      1.37895E+006
PCON      3
1.37895E+06 1 1 23 3
1.37895E+06 23 1 25 45
1.37895E+06 1 43 23 45
END
```

```
GCYL      MTI     RAYLEIGH - STEP SEAL PROBLEM


ECHO OF INPUT

OPTION    =    1          GIVEN EX, EY FIND LOAD, LOAD ANGLE
UNIT      =   2.          SI UNIT
NPAD      =    1          NUMBER OF PADS
START     =      0.00     STARTING ANGLE OF PAD # 1
PAD ANGLE =     90.00          PAD ANGLE OF PAD # 1
DIAMETER  =    0.0500     BEARING DIAMETER
LENGTH    =    0.0123     BEARING LENTH
CLEARANCE =  0.000013     BEARING CLEARANCE
GRIDN     =   45          GRID POINTS IN CIRCUMFERENTIAL DIRECTION
GRIDM     =   30          GRID POINTS IN AXIAL DIRECTION
STEP      =   5.   3.     RAYLEIGH STEP AT M, N
             19.  36.
DEPTH     =.25400E-04
VISCOSITY =  0.2190E-04   ABSOLUTE VISCOSITY
ABS TEMP  =    338.60     ABSOLUTE TEMPERATURE
SPECIFIC  =    1.6600     SPECIFIC HEAT RATIO
GAS CONST =    1154.8     GAS CONSTANT
JOINED                    JOINED BOUNDARY
MXIT1     =  15.          (FOR COMPRESSIBILITY)
MXIT2     =   0.          (FOR OPTION 2)
TOL1      =    0.0100     TOLERANCE(COMPRESSIBILITY)
TOL2      =    0.0000     ITERATION(OPTION 2)
ECC       =    0.0000     ECCENTRICITY RATIO
ECCANGLE  =      0.00     ECCENTRICITY ANGLE
SPEED     =  70000.00     ROTATIONAL SPEED IN RPM
PO        = 101352.93     REFERENCE(AMBIENT)  PRESSURE
PLEFT     =      0.00     GAGE PRESSURE AT LEFT BOUNDARY
PRITE     =      0.00     GAGE PRESSURE AT RIGHT BOUNDARY
PTOP      =      0.00     GAGE PRESSURE AT TOP BOUNDARY
PBOT      =1378950.00     GAGE PRESSURE AT BOTTOM BOUNDARY
CONSTANT PRESSURE REGION  PRESSURE =    0.13790E+07
ILP =     1  JLP =     1  IRP =    23  JRP =    3
CONSTANT PRESSURE REGION  PRESSURE =    0.13790E+07
ILP =    23  JLP =     1  IRP =    25  JRP =   45
CONSTANT PRESSURE REGION  PRESSURE =    0.13790E+07
ILP =     1  JLP =    43  IRP =    23  JRP =   45
FILE                      INITIAL PRESSURE FROM PREVIOUS RUN
END                       END OF INPUT
```

```
GCYL      MTI     RAYLEIGH - STEP SEAL PROBLEM


 GAS JOURNAL BEARING/SEAL


 -BEARING GEOMETRY
  NUMBER OF PADS =     1
          LENGTH =     0.0123 M
        DIAMETER =     0.0500 M
       CLEARANCE =  0.000013 M
  STARTING ANGLE =       0.00 DEG
       PAD ANGLE =      90.00 DEG

 -SPECIAL FILM THICKNESS SPECIFICATION
 STEP         I,J =   5.   3. UPPER LEFT CORNER
              I,J =  19.  36. LOWER RIGHT CORNER
            DEPTH =  0.000025 M

 -LUBRICANT PROPERTIES
               VISCOSITY =  0.2190000E-04 N-S/M**2
            GAS CONSTANT =   1154.836     M**2/S**2-K
       ABS. TEMPERATURE =   338.6000      DEG K
    SPECIFIC HEAT RATIO =   1.660000

 -BOUNDARY CONDITIONS
     REFERENCE P =   101352.9      PASCAL
           PLEFT =  0.0000000E+00 PASCAL
           PRITE =  0.0000000E+00 PASCAL
            PTOP =  0.0000000E+00 PASCAL
            PBOT =   1378950.     PASCAL
           SPEED =   70000.00     RPM

 -BEARING MODEL
               M =   30
               N =   45
          JOINED =    T
        SYMMETRY =    F

   Z -
   0.0000E+00  0.4241E-03  0.8483E-03  0.1272E-02  0.1697E-02
   0.2121E-02  0.2545E-02  0.2969E-02  0.3393E-02  0.3817E-02
   0.4241E-02  0.4666E-02  0.5090E-02  0.5514E-02  0.5938E-02
   0.6362E-02  0.6786E-02  0.7210E-02  0.7634E-02  0.8059E-02
   0.8483E-02  0.8907E-02  0.9331E-02  0.9755E-02  0.1018E-01
   0.1060E-01  0.1103E-01  0.1145E-01  0.1188E-01  0.1230E-01

   THETA -
   0.0000E+00   2.045       4.091       6.136       8.182
    10.23       12.27       14.32       16.36       18.41
    20.45       22.50       24.55       26.59       28.64
    30.68       32.73       34.77       36.82       38.86
    40.91       42.95       45.00       47.05       49.09
    51.14       53.18       55.23       57.27       59.32
    61.36       63.41       65.45       67.50       69.55
    71.59       73.64       75.68       77.73       79.77
    81.82       83.86       85.91       87.95       90.00

 -MAXIMUM NUMBER OF ITERATIONS
    MXIT1 =   15        (FOR COMPRESSIBILITY)
    MXIT2 =    5        (FOR OPTION 2)

 -TOLERANCE
     TOL1 =   0.01000  (FOR COMPRESSIBILITY)
     TOL2 =   0.01000  (FOR OPTION 2)
```



```
 -OPTION  =    1       GIVEN SHAFT POSITION  FIND LOAD, LOAD ANGLE


 SPECIFIED PRESSURE
     1 T T T T T T T T T T T T T T T T T T T T T T T T F F F F F
     2 T T T T T T T T T T T T T T T T T T T T T T T T F F F F F
     3 T T T T T T T T T T T T T T T T T T T T T T T T F F F F F
     4 F F F F F F F F F F F F F F F F F F F F F T T T F F F F F
     5 F F F F F F F F F F F F F F F F F F F F F T T T F F F F F
     6 F F F F F F F F F F F F F F F F F F F F F T T T F F F F F
     7 F F F F F F F F F F F F F F F F F F F F F T T T F F F F F
     8 F F F F F F F F F F F F F F F F F F F F F T T T F F F F F
     9 F F F F F F F F F F F F F F F F F F F F F T T T F F F F F
    10 F F F F F F F F F F F F F F F F F F F F F T T T F F F F F
    11 F F F F F F F F F F F F F F F F F F F F F T T T F F F F F
    12 F F F F F F F F F F F F F F F F F F F F F T T T F F F F F
    13 F F F F F F F F F F F F F F F F F F F F F T T T F F F F F
    14 F F F F F F F F F F F F F F F F F F F F F T T T F F F F F
    15 F F F F F F F F F F F F F F F F F F F F F T T T F F F F F
    16 F F F F F F F F F F F F F F F F F F F F F T T T F F F F F
    17 F F F F F F F F F F F F F F F F F F F F F T T T F F F F F
    18 F F F F F F F F F F F F F F F F F F F F F T T T F F F F F
    19 F F F F F F F F F F F F F F F F F F F F F T T T F F F F F
    20 F F F F F F F F F F F F F F F F F F F F F T T T F F F F F
    21 F F F F F F F F F F F F F F F F F F F F F T T T F F F F F
    22 F F F F F F F F F F F F F F F F F F F F F T T T F F F F F
    23 F F F F F F F F F F F F F F F F F F F F F T T T F F F F F
    24 F F F F F F F F F F F F F F F F F F F F F T T T F F F F F
    25 F F F F F F F F F F F F F F F F F F F F F T T T F F F F F
    26 F F F F F F F F F F F F F F F F F F F F F T T T F F F F F
    27 F F F F F F F F F F F F F F F F F F F F F T T T F F F F F
    28 F F F F F F F F F F F F F F F F F F F F F T T T F F F F F
    29 F F F F F F F F F F F F F F F F F F F F F T T T F F F F F
    30 F F F F F F F F F F F F F F F F F F F F F T T T F F F F F
    31 F F F F F F F F F F F F F F F F F F F F F T T T F F F F F
    32 F F F F F F F F F F F F F F F F F F F F F T T T F F F F F
    33 F F F F F F F F F F F F F F F F F F F F F T T T F F F F F
    34 F F F F F F F F F F F F F F F F F F F F F T T T F F F F F
    35 F F F F F F F F F F F F F F F F F F F F F T T T F F F F F
    36 F F F F F F F F F F F F F F F F F F F F F T T T F F F F F
    37 F F F F F F F F F F F F F F F F F F F F F T T T F F F F F
    38 F F F F F F F F F F F F F F F F F F F F F T T T F F F F F
    39 F F F F F F F F F F F F F F F F F F F F F T T T F F F F F
    40 F F F F F F F F F F F F F F F F F F F F F T T T F F F F F
    41 F F F F F F F F F F F F F F F F F F F F F T T T F F F F F
    42 F F F F F F F F F F F F F F F F F F F F F T T T F F F F F
    43 T T T T T T T T T T T T T T T T T T T T T T T T F F F F F
    44 T T T T T T T T T T T T T T T T T T T T T T T T F F F F F
    45 T T T T T T T T T T T T T T T T T T T T T T T T F F F F F
 PAD #  1  PRESSURE CALCULATION CONVERGED IN  1 ITERATIONS
```

NON-DIM CLEARANCE DISTRIBUTION(H/C) FOR PAD NUMBER 1

	I =	1	2	3	4	5	6
	AXIAL LENGTH METERS	0.000	0.000	0.001	0.001	0.002	0.002
J	DEG.						
1	0.0	1.00	1.00	1.00	1.00	1.00	1.00
2	2.0	1.00	1.00	1.00	1.00	1.00	1.00
3	4.1	1.00	1.00	1.00	1.00	3.00	3.00
4	6.1	1.00	1.00	1.00	1.00	3.00	3.00
5	8.2	1.00	1.00	1.00	1.00	3.00	3.00
6	10.2	1.00	1.00	1.00	1.00	3.00	3.00
7	12.3	1.00	1.00	1.00	1.00	3.00	3.00
8	14.3	1.00	1.00	1.00	1.00	3.00	3.00
9	16.4	1.00	1.00	1.00	1.00	3.00	3.00
10	18.4	1.00	1.00	1.00	1.00	3.00	3.00
11	20.5	1.00	1.00	1.00	1.00	3.00	3.00
12	22.5	1.00	1.00	1.00	1.00	3.00	3.00
13	24.5	1.00	1.00	1.00	1.00	3.00	3.00
14	26.6	1.00	1.00	1.00	1.00	3.00	3.00
15	28.6	1.00	1.00	1.00	1.00	3.00	3.00
16	30.7	1.00	1.00	1.00	1.00	3.00	3.00
17	32.7	1.00	1.00	1.00	1.00	3.00	3.00
18	34.8	1.00	1.00	1.00	1.00	3.00	3.00
19	36.8	1.00	1.00	1.00	1.00	3.00	3.00
20	38.9	1.00	1.00	1.00	1.00	3.00	3.00
21	40.9	1.00	1.00	1.00	1.00	3.00	3.00
22	43.0	1.00	1.00	1.00	1.00	3.00	3.00
23	45.0	1.00	1.00	1.00	1.00	3.00	3.00
24	47.0	1.00	1.00	1.00	1.00	3.00	3.00
25	49.1	1.00	1.00	1.00	1.00	3.00	3.00
26	51.1	1.00	1.00	1.00	1.00	3.00	3.00
27	53.2	1.00	1.00	1.00	1.00	3.00	3.00
28	55.2	1.00	1.00	1.00	1.00	3.00	3.00
29	57.3	1.00	1.00	1.00	1.00	3.00	3.00
30	59.3	1.00	1.00	1.00	1.00	3.00	3.00
31	61.4	1.00	1.00	1.00	1.00	3.00	3.00
32	63.4	1.00	1.00	1.00	1.00	3.00	3.00
33	65.5	1.00	1.00	1.00	1.00	3.00	3.00
34	67.5	1.00	1.00	1.00	1.00	3.00	3.00
35	69.5	1.00	1.00	1.00	1.00	3.00	3.00
36	71.6	1.00	1.00	1.00	1.00	1.00	1.00
37	73.6	1.00	1.00	1.00	1.00	1.00	1.00
38	75.7	1.00	1.00	1.00	1.00	1.00	1.00
39	77.7	1.00	1.00	1.00	1.00	1.00	1.00
40	79.8	1.00	1.00	1.00	1.00	1.00	1.00
41	81.8	1.00	1.00	1.00	1.00	1.00	1.00
42	83.9	1.00	1.00	1.00	1.00	1.00	1.00
43	85.9	1.00	1.00	1.00	1.00	1.00	1.00
44	88.0	1.00	1.00	1.00	1.00	1.00	1.00
45	90.0	1.00	1.00	1.00	1.00	1.00	1.00

NON-DIM CLEARANCE DISTRIBUTION(H/C) FOR PAD NUMBER 1

	I =	7	8	9	10	11	12
	AXIAL LENGTH METERS	0.003	0.003	0.003	0.004	0.004	0.005
J	DEG.						
1	0.0	1.00	1.00	1.00	1.00	1.00	1.00
2	2.0	1.00	1.00	1.00	1.00	1.00	1.00
3	4.1	3.00	3.00	3.00	3.00	3.00	3.00
4	6.1	3.00	3.00	3.00	3.00	3.00	3.00
5	8.2	3.00	3.00	3.00	3.00	3.00	3.00
6	10.2	3.00	3.00	3.00	3.00	3.00	3.00
7	12.3	3.00	3.00	3.00	3.00	3.00	3.00
8	14.3	3.00	3.00	3.00	3.00	3.00	3.00
9	16.4	3.00	3.00	3.00	3.00	3.00	3.00
10	18.4	3.00	3.00	3.00	3.00	3.00	3.00
11	20.5	3.00	3.00	3.00	3.00	3.00	3.00
12	22.5	3.00	3.00	3.00	3.00	3.00	3.00
13	24.5	3.00	3.00	3.00	3.00	3.00	3.00
14	26.6	3.00	3.00	3.00	3.00	3.00	3.00
15	28.6	3.00	3.00	3.00	3.00	3.00	3.00
16	30.7	3.00	3.00	3.00	3.00	3.00	3.00
17	32.7	3.00	3.00	3.00	3.00	3.00	3.00
18	34.8	3.00	3.00	3.00	3.00	3.00	3.00
19	36.8	3.00	3.00	3.00	3.00	3.00	3.00
20	38.9	3.00	3.00	3.00	3.00	3.00	3.00
21	40.9	3.00	3.00	3.00	3.00	3.00	3.00
22	43.0	3.00	3.00	3.00	3.00	3.00	3.00
23	45.0	3.00	3.00	3.00	3.00	3.00	3.00
24	47.0	3.00	3.00	3.00	3.00	3.00	3.00
25	49.1	3.00	3.00	3.00	3.00	3.00	3.00
26	51.1	3.00	3.00	3.00	3.00	3.00	3.00
27	53.2	3.00	3.00	3.00	3.00	3.00	3.00
28	55.2	3.00	3.00	3.00	3.00	3.00	3.00
29	57.3	3.00	3.00	3.00	3.00	3.00	3.00
30	59.3	3.00	3.00	3.00	3.00	3.00	3.00
31	61.4	3.00	3.00	3.00	3.00	3.00	3.00
32	63.4	3.00	3.00	3.00	3.00	3.00	3.00
33	65.5	3.00	3.00	3.00	3.00	3.00	3.00
34	67.5	3.00	3.00	3.00	3.00	3.00	3.00
35	69.5	3.00	3.00	3.00	3.00	3.00	3.00
36	71.6	3.00	3.00	3.00	3.00	3.00	3.00
37	73.6	1.00	1.00	1.00	1.00	1.00	1.00
38	75.7	1.00	1.00	1.00	1.00	1.00	1.00
39	77.7	1.00	1.00	1.00	1.00	1.00	1.00
40	79.8	1.00	1.00	1.00	1.00	1.00	1.00
41	81.8	1.00	1.00	1.00	1.00	1.00	1.00
42	83.9	1.00	1.00	1.00	1.00	1.00	1.00
43	85.9	1.00	1.00	1.00	1.00	1.00	1.00
44	88.0	1.00	1.00	1.00	1.00	1.00	1.00
45	90.0	1.00	1.00	1.00	1.00	1.00	1.00

NON-DIM CLEARANCE DISTRIBUTION(H/C) FOR PAD NUMBER 1

	I =	13	14	15	16	17	18
AXIAL LENGTH METERS		0.005	0.006	0.006	0.006	0.007	0.007
J	DEG.						
1	0.0	1.00	1.00	1.00	1.00	1.00	1.00
2	2.0	1.00	1.00	1.00	1.00	1.00	1.00
3	4.1	3.00	3.00	3.00	3.00	3.00	3.00
4	6.1	3.00	3.00	3.00	3.00	3.00	3.00
5	8.2	3.00	3.00	3.00	3.00	3.00	3.00
6	10.2	3.00	3.00	3.00	3.00	3.00	3.00
7	12.3	3.00	3.00	3.00	3.00	3.00	3.00
8	14.3	3.00	3.00	3.00	3.00	3.00	3.00
9	16.4	3.00	3.00	3.00	3.00	3.00	3.00
10	18.4	3.00	3.00	3.00	3.00	3.00	3.00
11	20.5	3.00	3.00	3.00	3.00	3.00	3.00
12	22.5	3.00	3.00	3.00	3.00	3.00	3.00
13	24.5	3.00	3.00	3.00	3.00	3.00	3.00
14	26.6	3.00	3.00	3.00	3.00	3.00	3.00
15	28.6	3.00	3.00	3.00	3.00	3.00	3.00
16	30.7	3.00	3.00	3.00	3.00	3.00	3.00
17	32.7	3.00	3.00	3.00	3.00	3.00	3.00
18	34.8	3.00	3.00	3.00	3.00	3.00	3.00
19	36.8	3.00	3.00	3.00	3.00	3.00	3.00
20	38.9	3.00	3.00	3.00	3.00	3.00	3.00
21	40.9	3.00	3.00	3.00	3.00	3.00	3.00
22	43.0	3.00	3.00	3.00	3.00	3.00	3.00
23	45.0	3.00	3.00	3.00	3.00	3.00	3.00
24	47.0	3.00	3.00	3.00	3.00	3.00	3.00
25	49.1	3.00	3.00	3.00	3.00	3.00	3.00
26	51.1	3.00	3.00	3.00	3.00	3.00	3.00
27	53.2	3.00	3.00	3.00	3.00	3.00	3.00
28	55.2	3.00	3.00	3.00	3.00	3.00	3.00
29	57.3	3.00	3.00	3.00	3.00	3.00	3.00
30	59.3	3.00	3.00	3.00	3.00	3.00	3.00
31	61.4	3.00	3.00	3.00	3.00	3.00	3.00
32	63.4	3.00	3.00	3.00	3.00	3.00	3.00
33	65.5	3.00	3.00	3.00	3.00	3.00	3.00
34	67.5	3.00	3.00	3.00	3.00	3.00	3.00
35	69.5	3.00	3.00	3.00	3.00	3.00	3.00
36	71.6	3.00	3.00	3.00	3.00	3.00	3.00
37	73.6	1.00	1.00	1.00	1.00	1.00	1.00
38	75.7	1.00	1.00	1.00	1.00	1.00	1.00
39	77.7	1.00	1.00	1.00	1.00	1.00	1.00
40	79.8	1.00	1.00	1.00	1.00	1.00	1.00
41	81.8	1.00	1.00	1.00	1.00	1.00	1.00
42	83.9	1.00	1.00	1.00	1.00	1.00	1.00
43	85.9	1.00	1.00	1.00	1.00	1.00	1.00
44	88.0	1.00	1.00	1.00	1.00	1.00	1.00
45	90.0	1.00	1.00	1.00	1.00	1.00	1.00

NON-DIM CLEARANCE DISTRIBUTION(H/C) FOR PAD NUMBER 1

	I =	19	20	21	22	23	24
AXIAL LENGTH METERS		0.008	0.008	0.008	0.009	0.009	0.010
J	DEG.						
1	0.0	1.00	1.00	1.00	1.00	1.00	1.00
2	2.0	1.00	1.00	1.00	1.00	1.00	1.00
3	4.1	3.00	1.00	1.00	1.00	1.00	1.00
4	6.1	3.00	1.00	1.00	1.00	1.00	1.00
5	8.2	3.00	1.00	1.00	1.00	1.00	1.00
6	10.2	3.00	1.00	1.00	1.00	1.00	1.00
7	12.3	3.00	1.00	1.00	1.00	1.00	1.00
8	14.3	3.00	1.00	1.00	1.00	1.00	1.00
9	16.4	3.00	1.00	1.00	1.00	1.00	1.00
10	18.4	3.00	1.00	1.00	1.00	1.00	1.00
11	20.5	3.00	1.00	1.00	1.00	1.00	1.00
12	22.5	3.00	1.00	1.00	1.00	1.00	1.00
13	24.5	3.00	1.00	1.00	1.00	1.00	1.00
14	26.6	3.00	1.00	1.00	1.00	1.00	1.00
15	28.6	3.00	1.00	1.00	1.00	1.00	1.00
16	30.7	3.00	1.00	1.00	1.00	1.00	1.00
17	32.7	3.00	1.00	1.00	1.00	1.00	1.00
18	34.8	3.00	1.00	1.00	1.00	1.00	1.00
19	36.8	3.00	1.00	1.00	1.00	1.00	1.00
20	38.9	3.00	1.00	1.00	1.00	1.00	1.00
21	40.9	3.00	1.00	1.00	1.00	1.00	1.00
22	43.0	3.00	1.00	1.00	1.00	1.00	1.00
23	45.0	3.00	1.00	1.00	1.00	1.00	1.00
24	47.0	3.00	1.00	1.00	1.00	1.00	1.00
25	49.1	3.00	1.00	1.00	1.00	1.00	1.00
26	51.1	3.00	1.00	1.00	1.00	1.00	1.00
27	53.2	3.00	1.00	1.00	1.00	1.00	1.00
28	55.2	3.00	1.00	1.00	1.00	1.00	1.00
29	57.3	3.00	1.00	1.00	1.00	1.00	1.00
30	59.3	3.00	1.00	1.00	1.00	1.00	1.00
31	61.4	3.00	1.00	1.00	1.00	1.00	1.00
32	63.4	3.00	1.00	1.00	1.00	1.00	1.00
33	65.5	3.00	1.00	1.00	1.00	1.00	1.00
34	67.5	3.00	1.00	1.00	1.00	1.00	1.00
35	69.5	3.00	1.00	1.00	1.00	1.00	1.00
36	71.6	3.00	1.00	1.00	1.00	1.00	1.00
37	73.6	1.00	1.00	1.00	1.00	1.00	1.00
38	75.7	1.00	1.00	1.00	1.00	1.00	1.00
39	77.7	1.00	1.00	1.00	1.00	1.00	1.00
40	79.8	1.00	1.00	1.00	1.00	1.00	1.00
41	81.8	1.00	1.00	1.00	1.00	1.00	1.00
42	83.9	1.00	1.00	1.00	1.00	1.00	1.00
43	85.9	1.00	1.00	1.00	1.00	1.00	1.00
44	88.0	1.00	1.00	1.00	1.00	1.00	1.00
45	90.0	1.00	1.00	1.00	1.00	1.00	1.00

NON-DIM CLEARANCE DISTRIBUTION(H/C) FOR PAD NUMBER 1

	I =	25	26	27	28	29	30
	AXIAL LENGTH METERS	0.010	0.011	0.011	0.011	0.012	0.012
J	DEG.						
1	0.0	1.00	1.00	1.00	1.00	1.00	1.00
2	2.0	1.00	1.00	1.00	1.00	1.00	1.00
3	4.1	1.00	1.00	1.00	1.00	1.00	1.00
4	6.1	1.00	1.00	1.00	1.00	1.00	1.00
5	8.2	1.00	1.00	1.00	1.00	1.00	1.00
6	10.2	1.00	1.00	1.00	1.00	1.00	1.00
7	12.3	1.00	1.00	1.00	1.00	1.00	1.00
8	14.3	1.00	1.00	1.00	1.00	1.00	1.00
9	16.4	1.00	1.00	1.00	1.00	1.00	1.00
10	18.4	1.00	1.00	1.00	1.00	1.00	1.00
11	20.5	1.00	1.00	1.00	1.00	1.00	1.00
12	22.5	1.00	1.00	1.00	1.00	1.00	1.00
13	24.5	1.00	1.00	1.00	1.00	1.00	1.00
14	26.6	1.00	1.00	1.00	1.00	1.00	1.00
15	28.6	1.00	1.00	1.00	1.00	1.00	1.00
16	30.7	1.00	1.00	1.00	1.00	1.00	1.00
17	32.7	1.00	1.00	1.00	1.00	1.00	1.00
18	34.8	1.00	1.00	1.00	1.00	1.00	1.00
19	36.8	1.00	1.00	1.00	1.00	1.00	1.00
20	38.9	1.00	1.00	1.00	1.00	1.00	1.00
21	40.9	1.00	1.00	1.00	1.00	1.00	1.00
22	43.0	1.00	1.00	1.00	1.00	1.00	1.00
23	45.0	1.00	1.00	1.00	1.00	1.00	1.00
24	47.0	1.00	1.00	1.00	1.00	1.00	1.00
25	49.1	1.00	1.00	1.00	1.00	1.00	1.00
26	51.1	1.00	1.00	1.00	1.00	1.00	1.00
27	53.2	1.00	1.00	1.00	1.00	1.00	1.00
28	55.2	1.00	1.00	1.00	1.00	1.00	1.00
29	57.3	1.00	1.00	1.00	1.00	1.00	1.00
30	59.3	1.00	1.00	1.00	1.00	1.00	1.00
31	61.4	1.00	1.00	1.00	1.00	1.00	1.00
32	63.4	1.00	1.00	1.00	1.00	1.00	1.00
33	65.5	1.00	1.00	1.00	1.00	1.00	1.00
34	67.5	1.00	1.00	1.00	1.00	1.00	1.00
35	69.5	1.00	1.00	1.00	1.00	1.00	1.00
36	71.6	1.00	1.00	1.00	1.00	1.00	1.00
37	73.6	1.00	1.00	1.00	1.00	1.00	1.00
38	75.7	1.00	1.00	1.00	1.00	1.00	1.00
39	77.7	1.00	1.00	1.00	1.00	1.00	1.00
40	79.8	1.00	1.00	1.00	1.00	1.00	1.00
41	81.8	1.00	1.00	1.00	1.00	1.00	1.00
42	83.9	1.00	1.00	1.00	1.00	1.00	1.00
43	85.9	1.00	1.00	1.00	1.00	1.00	1.00
44	88.0	1.00	1.00	1.00	1.00	1.00	1.00
45	90.0	1.00	1.00	1.00	1.00	1.00	1.00

MIN. CLEAR.= 1.0000 AT 90.000 DEGREES

MAX. CLEAR.= 3.0000 AT 71.591 DEGREES

PRESSURE DISTRIBUTION (MEGA - PASCAL) FOR PAD NUMBER 1

	I =	1	2	3	4	5	6
	AXIAL LENGTH METERS	0.000	0.000	0.001	0.001	0.002	0.002
J	DEG.						
1	0.0	1.38	1.38	1.38	1.38	1.38	1.38
2	2.0	1.38	1.38	1.38	1.38	1.38	1.38
3	4.1	1.38	1.38	1.38	1.38	1.38	1.38
4	6.1	1.38	1.38	1.38	1.38	1.38	1.38
5	8.2	1.38	1.38	1.38	1.38	1.38	1.38
6	10.2	1.38	1.38	1.38	1.38	1.38	1.38
7	12.3	1.38	1.38	1.38	1.38	1.38	1.38
8	14.3	1.38	1.38	1.38	1.38	1.38	1.38
9	16.4	1.38	1.38	1.38	1.38	1.38	1.38
10	18.4	1.38	1.38	1.38	1.38	1.39	1.39
11	20.5	1.38	1.38	1.38	1.38	1.39	1.39
12	22.5	1.38	1.38	1.38	1.39	1.39	1.39
13	24.5	1.38	1.38	1.38	1.39	1.39	1.39
14	26.6	1.38	1.38	1.38	1.39	1.39	1.39
15	28.6	1.38	1.38	1.39	1.39	1.39	1.39
16	30.7	1.38	1.38	1.39	1.39	1.39	1.39
17	32.7	1.38	1.38	1.39	1.39	1.40	1.40
18	34.8	1.38	1.38	1.39	1.39	1.40	1.40
19	36.8	1.38	1.38	1.39	1.40	1.40	1.40
20	38.9	1.38	1.39	1.39	1.40	1.40	1.40
21	40.9	1.38	1.39	1.39	1.40	1.41	1.41
22	43.0	1.38	1.39	1.39	1.40	1.41	1.41
23	45.0	1.38	1.39	1.40	1.40	1.41	1.41
24	47.0	1.38	1.39	1.40	1.41	1.42	1.42
25	49.1	1.38	1.39	1.40	1.41	1.42	1.42
26	51.1	1.38	1.39	1.40	1.41	1.42	1.43
27	53.2	1.38	1.39	1.40	1.42	1.43	1.43
28	55.2	1.38	1.39	1.41	1.42	1.44	1.44
29	57.3	1.38	1.39	1.41	1.43	1.44	1.44
30	59.3	1.38	1.40	1.41	1.43	1.45	1.45
31	61.4	1.38	1.40	1.42	1.44	1.46	1.46
32	63.4	1.38	1.40	1.42	1.44	1.46	1.47
33	65.5	1.38	1.40	1.43	1.45	1.47	1.47
34	67.5	1.38	1.41	1.43	1.46	1.48	1.48
35	69.5	1.38	1.41	1.44	1.46	1.49	1.50
36	71.6	1.38	1.41	1.44	1.47	1.50	1.51
37	73.6	1.38	1.40	1.42	1.44	1.46	1.47
38	75.7	1.38	1.39	1.41	1.42	1.43	1.44
39	77.7	1.38	1.39	1.40	1.41	1.42	1.43
40	79.8	1.38	1.39	1.39	1.40	1.41	1.41
41	81.8	1.38	1.38	1.39	1.39	1.40	1.40
42	83.9	1.38	1.38	1.38	1.39	1.39	1.39
43	85.9	1.38	1.38	1.38	1.38	1.38	1.38
44	88.0	1.38	1.38	1.38	1.38	1.38	1.38
45	90.0	1.38	1.38	1.38	1.38	1.38	1.38

PRESSURE DISTRIBUTION (MEGA - PASCAL) FOR PAD NUMBER 1

	I =	7	8	9	10	11	12
	AXIAL LENGTH METERS	0.003	0.003	0.003	0.004	0.004	0.005
J	DEG.						
1	0.0	1.38	1.38	1.38	1.38	1.38	1.38
2	2.0	1.38	1.38	1.38	1.38	1.38	1.38
3	4.1	1.38	1.38	1.38	1.38	1.38	1.38
4	6.1	1.38	1.38	1.38	1.38	1.38	1.38
5	8.2	1.38	1.38	1.38	1.38	1.38	1.38
6	10.2	1.38	1.38	1.38	1.38	1.38	1.38
7	12.3	1.38	1.38	1.38	1.38	1.38	1.38
8	14.3	1.38	1.38	1.38	1.38	1.38	1.38
9	16.4	1.38	1.38	1.38	1.38	1.38	1.38
10	18.4	1.39	1.39	1.39	1.39	1.39	1.39
11	20.5	1.39	1.39	1.39	1.39	1.39	1.39
12	22.5	1.39	1.39	1.39	1.39	1.39	1.39
13	24.5	1.39	1.39	1.39	1.39	1.39	1.39
14	26.6	1.39	1.39	1.39	1.39	1.39	1.39
15	28.6	1.39	1.39	1.39	1.39	1.39	1.39
16	30.7	1.39	1.39	1.39	1.39	1.39	1.39
17	32.7	1.40	1.40	1.40	1.40	1.40	1.40
18	34.8	1.40	1.40	1.40	1.40	1.40	1.40
19	36.8	1.40	1.40	1.40	1.40	1.40	1.40
20	38.9	1.40	1.40	1.40	1.40	1.40	1.40
21	40.9	1.41	1.41	1.41	1.41	1.41	1.41
22	43.0	1.41	1.41	1.41	1.41	1.41	1.41
23	45.0	1.41	1.41	1.41	1.41	1.41	1.41
24	47.0	1.42	1.42	1.42	1.42	1.42	1.42
25	49.1	1.42	1.42	1.42	1.42	1.42	1.42
26	51.1	1.43	1.43	1.43	1.43	1.43	1.43
27	53.2	1.43	1.43	1.43	1.43	1.43	1.43
28	55.2	1.44	1.44	1.44	1.44	1.44	1.44
29	57.3	1.44	1.44	1.44	1.44	1.44	1.44
30	59.3	1.45	1.45	1.45	1.45	1.45	1.45
31	61.4	1.46	1.46	1.46	1.46	1.46	1.46
32	63.4	1.47	1.47	1.47	1.47	1.47	1.47
33	65.5	1.48	1.48	1.48	1.48	1.48	1.48
34	67.5	1.49	1.49	1.49	1.49	1.49	1.49
35	69.5	1.50	1.50	1.50	1.50	1.50	1.50
36	71.6	1.51	1.51	1.51	1.51	1.51	1.51
37	73.6	1.48	1.48	1.49	1.49	1.49	1.49
38	75.7	1.45	1.46	1.46	1.46	1.47	1.47
39	77.7	1.43	1.44	1.44	1.44	1.44	1.45
40	79.8	1.42	1.42	1.42	1.43	1.43	1.43
41	81.8	1.40	1.41	1.41	1.41	1.41	1.41
42	83.9	1.39	1.39	1.39	1.39	1.39	1.39
43	85.9	1.38	1.38	1.38	1.38	1.38	1.38
44	88.0	1.38	1.38	1.38	1.38	1.38	1.38
45	90.0	1.38	1.38	1.38	1.38	1.38	1.38

PRESSURE DISTRIBUTION (MEGA - PASCAL) FOR PAD NUMBER 1

	I =	13	14	15	16	17	18
	AXIAL LENGTH METERS	0.005	0.006	0.006	0.006	0.007	0.007
J	DEG.						
1	0.0	1.38	1.38	1.38	1.38	1.38	1.38
2	2.0	1.38	1.38	1.38	1.38	1.38	1.38
3	4.1	1.38	1.38	1.38	1.38	1.38	1.38
4	6.1	1.38	1.38	1.38	1.38	1.38	1.38
5	8.2	1.38	1.38	1.38	1.38	1.38	1.38
6	10.2	1.38	1.38	1.38	1.38	1.38	1.38
7	12.3	1.38	1.38	1.38	1.38	1.38	1.38
8	14.3	1.38	1.38	1.38	1.38	1.38	1.38
9	16.4	1.38	1.38	1.38	1.38	1.38	1.38
10	18.4	1.39	1.39	1.39	1.39	1.39	1.39
11	20.5	1.39	1.39	1.39	1.39	1.39	1.39
12	22.5	1.39	1.39	1.39	1.39	1.39	1.39
13	24.5	1.39	1.39	1.39	1.39	1.39	1.39
14	26.6	1.39	1.39	1.39	1.39	1.39	1.39
15	28.6	1.39	1.39	1.39	1.39	1.39	1.39
16	30.7	1.39	1.39	1.39	1.39	1.39	1.39
17	32.7	1.40	1.40	1.40	1.40	1.40	1.40
18	34.8	1.40	1.40	1.40	1.40	1.40	1.40
19	36.8	1.40	1.40	1.40	1.40	1.40	1.40
20	38.9	1.40	1.40	1.40	1.40	1.40	1.40
21	40.9	1.41	1.41	1.41	1.41	1.41	1.41
22	43.0	1.41	1.41	1.41	1.41	1.41	1.41
23	45.0	1.41	1.41	1.41	1.41	1.41	1.41
24	47.0	1.42	1.42	1.42	1.42	1.42	1.42
25	49.1	1.42	1.42	1.42	1.42	1.42	1.42
26	51.1	1.43	1.43	1.43	1.43	1.43	1.43
27	53.2	1.43	1.43	1.43	1.43	1.43	1.43
28	55.2	1.44	1.44	1.44	1.44	1.44	1.44
29	57.3	1.44	1.44	1.44	1.44	1.44	1.44
30	59.3	1.45	1.45	1.45	1.45	1.45	1.45
31	61.4	1.46	1.46	1.46	1.46	1.46	1.46
32	63.4	1.47	1.47	1.47	1.47	1.47	1.47
33	65.5	1.48	1.48	1.48	1.48	1.48	1.47
34	67.5	1.49	1.49	1.49	1.49	1.49	1.48
35	69.5	1.50	1.50	1.50	1.50	1.50	1.50
36	71.6	1.51	1.51	1.51	1.51	1.51	1.51
37	73.6	1.49	1.49	1.49	1.48	1.48	1.47
38	75.7	1.47	1.46	1.46	1.46	1.45	1.44
39	77.7	1.44	1.44	1.44	1.44	1.43	1.43
40	79.8	1.43	1.43	1.42	1.42	1.42	1.41
41	81.8	1.41	1.41	1.41	1.41	1.40	1.40
42	83.9	1.39	1.39	1.39	1.39	1.39	1.39
43	85.9	1.38	1.38	1.38	1.38	1.38	1.38
44	88.0	1.38	1.38	1.38	1.38	1.38	1.38
45	90.0	1.38	1.38	1.38	1.38	1.38	1.38

PRESSURE DISTRIBUTION (MEGA - PASCAL) FOR PAD NUMBER 1

	I =	19	20	21	22	23	24
AXIAL LENGTH METERS		0.008	0.008	0.008	0.009	0.009	0.010
J	DEG.						
1	0.0	1.38	1.38	1.38	1.38	1.38	1.38
2	2.0	1.38	1.38	1.38	1.38	1.38	1.38
3	4.1	1.38	1.38	1.38	1.38	1.38	1.38
4	6.1	1.38	1.38	1.38	1.38	1.38	1.38
5	8.2	1.38	1.38	1.38	1.38	1.38	1.38
6	10.2	1.38	1.38	1.38	1.38	1.38	1.38
7	12.3	1.38	1.38	1.38	1.38	1.38	1.38
8	14.3	1.38	1.38	1.38	1.38	1.38	1.38
9	16.4	1.38	1.38	1.38	1.38	1.38	1.38
10	18.4	1.39	1.38	1.38	1.38	1.38	1.38
11	20.5	1.39	1.38	1.38	1.38	1.38	1.38
12	22.5	1.39	1.39	1.38	1.38	1.38	1.38
13	24.5	1.39	1.39	1.38	1.38	1.38	1.38
14	26.6	1.39	1.39	1.38	1.38	1.38	1.38
15	28.6	1.39	1.39	1.39	1.38	1.38	1.38
16	30.7	1.39	1.39	1.39	1.38	1.38	1.38
17	32.7	1.40	1.39	1.39	1.38	1.38	1.38
18	34.8	1.40	1.39	1.39	1.38	1.38	1.38
19	36.8	1.40	1.40	1.39	1.38	1.38	1.38
20	38.9	1.40	1.40	1.39	1.39	1.38	1.38
21	40.9	1.41	1.40	1.39	1.39	1.38	1.38
22	43.0	1.41	1.40	1.39	1.39	1.38	1.38
23	45.0	1.41	1.40	1.40	1.39	1.38	1.38
24	47.0	1.42	1.41	1.40	1.39	1.38	1.38
25	49.1	1.42	1.41	1.40	1.39	1.38	1.38
26	51.1	1.42	1.41	1.40	1.39	1.38	1.38
27	53.2	1.43	1.42	1.40	1.39	1.38	1.38
28	55.2	1.44	1.42	1.41	1.39	1.38	1.38
29	57.3	1.44	1.43	1.41	1.39	1.38	1.38
30	59.3	1.45	1.43	1.41	1.40	1.38	1.38
31	61.4	1.46	1.44	1.42	1.40	1.38	1.38
32	63.4	1.46	1.44	1.42	1.40	1.38	1.38
33	65.5	1.47	1.45	1.43	1.40	1.38	1.38
34	67.5	1.48	1.46	1.43	1.41	1.38	1.38
35	69.5	1.49	1.46	1.44	1.41	1.38	1.38
36	71.6	1.50	1.47	1.44	1.41	1.38	1.38
37	73.6	1.46	1.44	1.42	1.40	1.38	1.38
38	75.7	1.43	1.42	1.41	1.39	1.38	1.38
39	77.7	1.42	1.41	1.40	1.39	1.38	1.38
40	79.8	1.41	1.40	1.39	1.39	1.38	1.38
41	81.8	1.40	1.39	1.39	1.38	1.38	1.38
42	83.9	1.39	1.39	1.38	1.38	1.38	1.38
43	85.9	1.38	1.38	1.38	1.38	1.38	1.38
44	88.0	1.38	1.38	1.38	1.38	1.38	1.38
45	90.0	1.38	1.38	1.38	1.38	1.38	1.38

PRESSURE DISTRIBUTION (MEGA - PASCAL) FOR PAD NUMBER 1

	I =	25	26	27	28	29	30
AXIAL LENGTH METERS		0.010	0.011	0.011	0.011	0.012	0.012
J	DEG.						
1	0.0	1.38	1.22	1.05	0.838	0.567	0.000E+00
2	2.0	1.38	1.22	1.05	0.838	0.567	0.000E+00
3	4.1	1.38	1.22	1.05	0.838	0.567	0.000E+00
4	6.1	1.38	1.22	1.05	0.838	0.567	0.000E+00
5	8.2	1.38	1.22	1.05	0.838	0.567	0.000E+00
6	10.2	1.38	1.22	1.05	0.838	0.567	0.000E+00
7	12.3	1.38	1.22	1.05	0.838	0.567	0.000E+00
8	14.3	1.38	1.22	1.05	0.838	0.567	0.000E+00
9	16.4	1.38	1.22	1.05	0.838	0.567	0.000E+00
10	18.4	1.38	1.22	1.05	0.838	0.567	0.000E+00
11	20.5	1.38	1.22	1.05	0.838	0.567	0.000E+00
12	22.5	1.38	1.22	1.05	0.838	0.567	0.000E+00
13	24.5	1.38	1.22	1.05	0.838	0.567	0.000E+00
14	26.6	1.38	1.22	1.05	0.838	0.567	0.000E+00
15	28.6	1.38	1.22	1.05	0.838	0.567	0.000E+00
16	30.7	1.38	1.22	1.05	0.838	0.567	0.000E+00
17	32.7	1.38	1.22	1.05	0.838	0.567	0.000E+00
18	34.8	1.38	1.22	1.05	0.838	0.567	0.000E+00
19	36.8	1.38	1.22	1.05	0.838	0.567	0.000E+00
20	38.9	1.38	1.22	1.05	0.838	0.567	0.000E+00
21	40.9	1.38	1.22	1.05	0.838	0.567	0.000E+00
22	43.0	1.38	1.22	1.05	0.838	0.567	0.000E+00
23	45.0	1.38	1.22	1.05	0.838	0.567	0.000E+00
24	47.0	1.38	1.22	1.05	0.838	0.567	0.000E+00
25	49.1	1.38	1.22	1.05	0.838	0.567	0.000E+00
26	51.1	1.38	1.22	1.05	0.838	0.567	0.000E+00
27	53.2	1.38	1.22	1.05	0.838	0.567	0.000E+00
28	55.2	1.38	1.22	1.05	0.838	0.567	0.000E+00
29	57.3	1.38	1.22	1.05	0.838	0.567	0.000E+00
30	59.3	1.38	1.22	1.05	0.838	0.567	0.000E+00
31	61.4	1.38	1.22	1.05	0.838	0.567	0.000E+00
32	63.4	1.38	1.22	1.05	0.838	0.567	0.000E+00
33	65.5	1.38	1.22	1.05	0.838	0.567	0.000E+00
34	67.5	1.38	1.22	1.05	0.838	0.567	0.000E+00
35	69.5	1.38	1.22	1.05	0.838	0.567	0.000E+00
36	71.6	1.38	1.22	1.05	0.838	0.567	0.000E+00
37	73.6	1.38	1.22	1.05	0.838	0.567	0.000E+00
38	75.7	1.38	1.22	1.05	0.838	0.567	0.000E+00
39	77.7	1.38	1.22	1.05	0.838	0.567	0.000E+00
40	79.8	1.38	1.22	1.05	0.838	0.567	0.000E+00
41	81.8	1.38	1.22	1.05	0.838	0.567	0.000E+00
42	83.9	1.38	1.22	1.05	0.838	0.567	0.000E+00
43	85.9	1.38	1.22	1.05	0.838	0.567	0.000E+00
44	88.0	1.38	1.22	1.05	0.838	0.567	0.000E+00
45	90.0	1.38	1.22	1.05	0.838	0.567	0.000E+00

MIN. PRESS= 0.00000E+00 AT 90.000 DEGREES

MAX. PRESS= 1.5140 AT 71.591 DEGREES

```
GCYL      MTI     RAYLEIGH - STEP SEAL PROBLEM


 -JOURNAL & LOAD POSITION
   ECCENTRICITY            =     0.00000
   ECCENTRICITY ANGLE      =        0.00 DEG
   MINIMUM FILM            =   0.0000127 M
   LOAD                    =   571.6     N
   LOAD ANGLE              =     -134.73 DEG

   POWER LOSS              =   26.27     W

   LEAKAGE AT I = 1        =-0.23044E-04 KG/S

   LEAKAGE AT I = M        = 0.33187E-03 KG/S

 -RIGHTING MOMENT
   ABOUT X-X            MX = -0.1609     N-M
   ABOUT Y-Y            MY =  0.1552     N-M
```



```
GCYL      MTI     RAYLEIGH - STEP SEAL PROBLEM


  ECHO OF INPUT

 NO MORE INPUT, PROGRAM TERMINATED
ATED
INPUT

 NO MORE INPUT, PROGRAM TERMINATED
```

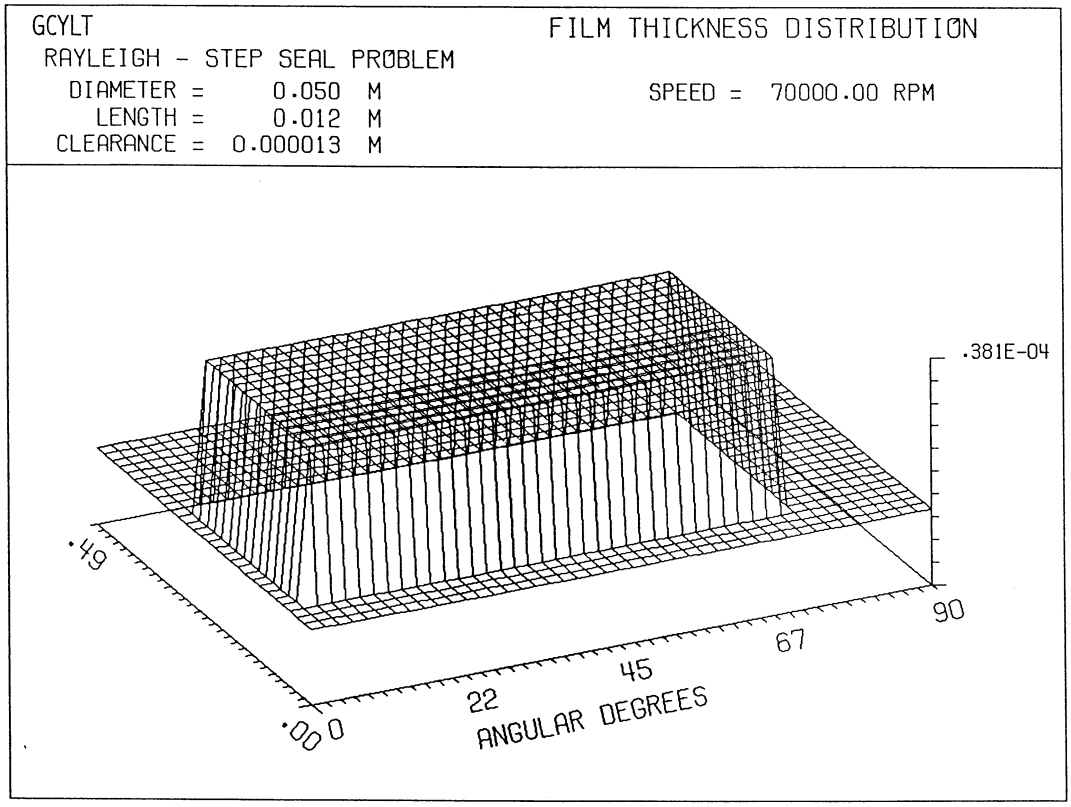

94TM10

Figure 5-17. Clearance Distribution, Rayleigh-Step Pad

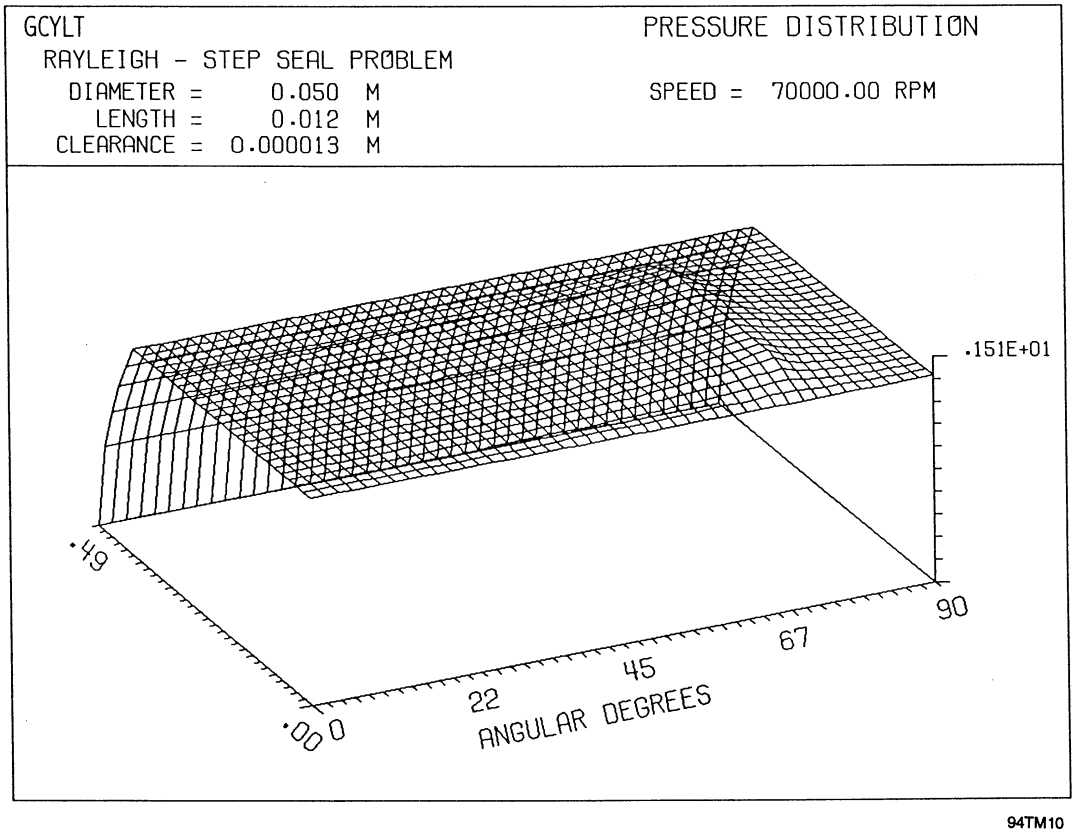

94TM10

Figure 5-18. Pressure Distribution, Rayleigh-Step Pad

5.6 Sample Problem 6 - Rayleigh-Step Seal with Eccentricity

This problem will be similar to Problem 5 except the shaft is to be eccentric with respect to the seal ring. In this case, periodic boundary conditions cannot be used and to conserve grid space, one hydrodynamic pad will be modeled and the number of pads will be four. To model separate pads, however, requires that the boundary conditions be known on all extremities of the pad. The seal dam region is not a separate pad problem but is a single 360° pad. Thus, the problem resolves into two separate problems; one that treats the separate Rayleigh pads and one that treats the seal dam. For this particular example, only the Rayleigh-Step hydrodynamic region is considered. This problem is identified as RSEX2C.xxx in the diskette supplied to NASA. The following geometric and operating parameters have been applied:

- International units are invoked
- OPTION = 1, i.e., the shaft position relative to the seal ring is specified
- Stiffness is calculated in four degrees of freedom at a 70,000 rpm excitation frequency
- Number of pads is 4; each pad has an extent of 90°
- Shaft diameter = 0.05 m
- Shaft length = 0.0123 m
- Reference clearance = 1.27×10^{-5} m
- Gas viscosity = 2.19×10^{-5} N-s/m^2
- Absolute temperature = 338.6°K
- Ratio of specific heat = 1.66
- Gas constant = 1154.84 m^2/(s^2-°K)
- Shaft eccentricity ratio = 0.5
- Eccentricity angle = 270°
- Shaft speed = 70,000 rpm
- Reference pressure = 1.01353×10^5 Pa
- Pad boundary pressures are 1.37895×10^6 Pa.

Following are the input and output for this case. To include the groove pressures, two constant pressure regions are specified.

At the specified position, the load capacity of the seal is 69.73 N and the load angle is 69.47° from the x-axis. The minimum film thickness is 6.4×10^{-6} m. The clearance and pressure distributions are shown on Figures 5-19 and 5-20, respectively.

```
RSEX2
RAYLEIGH - STEP SEAL PROBLEM
OPTION      1
SI
STIFFNESS  4  7.00000E+004
NPAD       4
START      0.00000E+000
PADANGLE   9.00000E+001
DIAMETER   5.00000E-002
LENGTH     1.23000E-002
CLEARANCE  1.27000E-005
GRIDN      45
GRIDM      23
STEP       1
5  3  19  36  2.54000E-005
VISCOSITY     2.19000E-005
ABSTEMP       3.38600E+002
SPHEAT        1.66000E+000
GASCONST      1.15484E+003
ITERATION  15
TOLERANCE  1.00000E-002
ECC        5.00000E-001
ECCANGLE   2.70000E+002
SPEED      7.00000E+004
PO         1.01353E+005
PLEFT      1.37895E+006
PRITE      1.37895E+006
PTOP       1.37895E+006
PBOT       1.37895E+006
PCON       2
           1.37895E+006  2 2 22 3
           1.37895E+006  2 43 22 44
FILE
END
```

```
GCYL      MTI     RAYLEIGH - STEP SEAL PROBLEM


 ECHO OF INPUT

 OPTION     =    1          GIVEN EX, EY FIND LOAD, LOAD ANGLE
 UNIT       =   2.          SI UNIT
 ISTIF      =    1          STIFFNESS CALCULATION
 DEGREES OF FREEDOM =   4.
 EXCITATION SPEED, RPM  =   70000.0000
 NPAD       =    4          NUMBER OF PADS
 START      =      0.00     STARTING ANGLE OF PAD # 1
 PAD ANGLE =     90.00          PAD ANGLE OF PAD # 1
 DIAMETER   =    0.0500     BEARING DIAMETER
 LENGTH     =    0.0123     BEARING LENTH
 CLEARANCE =  0.000013      BEARING CLEARANCE
 GRIDN      =   45          GRID POINTS IN CIRCUMFERENTIAL DIRECTION
 GRIDM      =   23          GRID POINTS IN AXIAL DIRECTION
 STEP       =   5.   3.     RAYLEIGH STEP AT M, N
              19.  36.
 DEPTH      =.25400E-04
 VISCOSITY =  0.2190E-04    ABSOLUTE VISCOSITY
 ABS TEMP  =    338.60      ABSOLUTE TEMPERATURE
 SPECIFIC  =    1.6600      SPECIFIC HEAT RATIO
 GAS CONST =    1154.8      GAS CONSTANT
 MXIT1      =  15.          (FOR COMPRESSIBILITY)
 MXIT2      =   0.          (FOR OPTION 2)
 TOL1       =    0.0100     TOLERANCE(COMPRESSIBILITY)
 TOL2       =    0.0000     ITERATION(OPTION 2)
 ECC        =    0.5000     ECCENTRICITY RATIO
 ECCANGLE   =    270.00     ECCENTRICITY ANGLE
 SPEED      =  70000.00     ROTATIONAL SPEED IN RPM
 PO         = 101353.00     REFERENCE(AMBIENT)  PRESSURE
 PLEFT      =1378950.00     GAGE PRESSURE AT LEFT BOUNDARY
 PRITE      =1378950.00     GAGE PRESSURE AT RIGHT BOUNDARY
 PTOP       =1378950.00     GAGE PRESSURE AT TOP BOUNDARY
 PBOT       =1378950.00     GAGE PRESSURE AT BOTTOM BOUNDARY
 CONSTANT PRESSURE REGION  PRESSURE =    0.13790E+07
 ILP =     2  JLP =     2  IRP =    22  JRP =    3
 CONSTANT PRESSURE REGION  PRESSURE =    0.13790E+07
 ILP =     2  JLP =    43  IRP =    22  JRP =   44
 FILE                      INITIAL PRESSURE FROM PREVIOUS RUN
 END                       END OF INPUT
```

```
GCYL      MTI     RAYLEIGH - STEP SEAL PROBLEM


 GAS JOURNAL BEARING/SEAL


 -BEARING GEOMETRY
  NUMBER OF PADS =    4
          LENGTH =    0.0123 M
        DIAMETER =    0.0500 M
       CLEARANCE =  0.000013 M
  STARTING ANGLE =      0.00 DEG
       PAD ANGLE =     90.00 DEG

 -SPECIAL FILM THICKNESS SPECIFICATION
 STEP        I,J =   5.   3. UPPER LEFT CORNER
             I,J =  19.  36. LOWER RIGHT CORNER
           DEPTH =  0.000025 M

 -LUBRICANT PROPERTIES
               VISCOSITY =  0.2190000E-04 N-S/M**2
            GAS CONSTANT =   1154.840     M**2/S**2-K
        ABS. TEMPERATURE =   338.6000     DEG K
     SPECIFIC HEAT RATIO =   1.660000

 -BOUNDARY CONDITIONS
     REFERENCE P =   101353.0     PASCAL
           PLEFT =   1378950.     PASCAL
           PRITE =   1378950.     PASCAL
            PTOP =   1378950.     PASCAL
            PBOT =   1378950.     PASCAL
           SPEED =   70000.00     RPM

 -BEARING MODEL
               M =   23
               N =   45
          JOINED =    F
        SYMMETRY =    F

   Z -
   0.0000E+00  0.5591E-03  0.1118E-02  0.1677E-02  0.2236E-02
   0.2795E-02  0.3355E-02  0.3914E-02  0.4473E-02  0.5032E-02
   0.5591E-02  0.6150E-02  0.6709E-02  0.7268E-02  0.7827E-02
   0.8386E-02  0.8945E-02  0.9505E-02  0.1006E-01  0.1062E-01
   0.1118E-01  0.1174E-01  0.1230E-01

   THETA -
   0.0000E+00   2.045       4.091       6.136       8.182
    10.23       12.27       14.32       16.36       18.41
    20.45       22.50       24.55       26.59       28.64
    30.68       32.73       34.77       36.82       38.86
    40.91       42.95       45.00       47.05       49.09
    51.14       53.18       55.23       57.27       59.32
    61.36       63.41       65.45       67.50       69.55
    71.59       73.64       75.68       77.73       79.77
    81.82       83.86       85.91       87.95       90.00

 -MAXIMUM NUMBER OF ITERATIONS
    MXIT1 =   15       (FOR COMPRESSIBILITY)
    MXIT2 =    5       (FOR OPTION 2)

 -TOLERANCE
     TOL1 =   0.01000  (FOR COMPRESSIBILITY)
     TOL2 =   0.01000  (FOR OPTION 2)
```



```
 -OPTION  =    1       GIVEN SHAFT POSITION  FIND LOAD, LOAD ANGLE


 SPECIFIED PRESSURE
     1 F F F F F F F F F F F F F F F F F F F F F F
     2 F T T T T T T T T T T T T T T T T T T T T F
     3 F T T T T T T T T T T T T T T T T T T T T F
     4 F F F F F F F F F F F F F F F F F F F F F F
     5 F F F F F F F F F F F F F F F F F F F F F F
     6 F F F F F F F F F F F F F F F F F F F F F F
     7 F F F F F F F F F F F F F F F F F F F F F F
     8 F F F F F F F F F F F F F F F F F F F F F F
     9 F F F F F F F F F F F F F F F F F F F F F F
    10 F F F F F F F F F F F F F F F F F F F F F F
    11 F F F F F F F F F F F F F F F F F F F F F F
    12 F F F F F F F F F F F F F F F F F F F F F F
    13 F F F F F F F F F F F F F F F F F F F F F F
    14 F F F F F F F F F F F F F F F F F F F F F F
    15 F F F F F F F F F F F F F F F F F F F F F F
    16 F F F F F F F F F F F F F F F F F F F F F F
    17 F F F F F F F F F F F F F F F F F F F F F F
    18 F F F F F F F F F F F F F F F F F F F F F F
    19 F F F F F F F F F F F F F F F F F F F F F F
    20 F F F F F F F F F F F F F F F F F F F F F F
    21 F F F F F F F F F F F F F F F F F F F F F F
    22 F F F F F F F F F F F F F F F F F F F F F F
    23 F F F F F F F F F F F F F F F F F F F F F F
    24 F F F F F F F F F F F F F F F F F F F F F F
    25 F F F F F F F F F F F F F F F F F F F F F F
    26 F F F F F F F F F F F F F F F F F F F F F F
    27 F F F F F F F F F F F F F F F F F F F F F F
    28 F F F F F F F F F F F F F F F F F F F F F F
    29 F F F F F F F F F F F F F F F F F F F F F F
    30 F F F F F F F F F F F F F F F F F F F F F F
    31 F F F F F F F F F F F F F F F F F F F F F F
    32 F F F F F F F F F F F F F F F F F F F F F F
    33 F F F F F F F F F F F F F F F F F F F F F F
    34 F F F F F F F F F F F F F F F F F F F F F F
    35 F F F F F F F F F F F F F F F F F F F F F F
    36 F F F F F F F F F F F F F F F F F F F F F F
    37 F F F F F F F F F F F F F F F F F F F F F F
    38 F F F F F F F F F F F F F F F F F F F F F F
    39 F F F F F F F F F F F F F F F F F F F F F F
    40 F F F F F F F F F F F F F F F F F F F F F F
    41 F F F F F F F F F F F F F F F F F F F F F F
    42 F F F F F F F F F F F F F F F F F F F F F F
    43 F T T T T T T T T T T T T T T T T T T T T F
    44 F T T T T T T T T T T T T T T T T T T T T F
    45 F F F F F F F F F F F F F F F F F F F F F F
 PAD #  1  PRESSURE CALCULATION CONVERGED IN  1 ITERATIONS
 PAD #  2  PRESSURE CALCULATION CONVERGED IN  1 ITERATIONS
 PAD #  3  PRESSURE CALCULATION CONVERGED IN  1 ITERATIONS
 PAD #  4  PRESSURE CALCULATION CONVERGED IN  1 ITERATIONS
```

NON-DIM CLEARANCE DISTRIBUTION(H/C) FOR PAD NUMBER 1

	I =	1	2	3	4	5	6
	AXIAL LENGTH METERS	0.000	0.001	0.001	0.002	0.002	0.003
J	DEG.						
1	0.0	1.00	1.00	1.00	1.00	1.00	1.00
2	2.0	1.02	1.02	1.02	1.02	1.02	1.02
3	4.1	1.04	1.04	1.04	1.04	3.04	3.04
4	6.1	1.05	1.05	1.05	1.05	3.05	3.05
5	8.2	1.07	1.07	1.07	1.07	3.07	3.07
6	10.2	1.09	1.09	1.09	1.09	3.09	3.09
7	12.3	1.11	1.11	1.11	1.11	3.11	3.11
8	14.3	1.12	1.12	1.12	1.12	3.12	3.12
9	16.4	1.14	1.14	1.14	1.14	3.14	3.14
10	18.4	1.16	1.16	1.16	1.16	3.16	3.16
11	20.5	1.17	1.17	1.17	1.17	3.17	3.17
12	22.5	1.19	1.19	1.19	1.19	3.19	3.19
13	24.5	1.21	1.21	1.21	1.21	3.21	3.21
14	26.6	1.22	1.22	1.22	1.22	3.22	3.22
15	28.6	1.24	1.24	1.24	1.24	3.24	3.24
16	30.7	1.26	1.26	1.26	1.26	3.26	3.26
17	32.7	1.27	1.27	1.27	1.27	3.27	3.27
18	34.8	1.29	1.29	1.29	1.29	3.29	3.29
19	36.8	1.30	1.30	1.30	1.30	3.30	3.30
20	38.9	1.31	1.31	1.31	1.31	3.31	3.31
21	40.9	1.33	1.33	1.33	1.33	3.33	3.33
22	43.0	1.34	1.34	1.34	1.34	3.34	3.34
23	45.0	1.35	1.35	1.35	1.35	3.35	3.35
24	47.0	1.37	1.37	1.37	1.37	3.37	3.37
25	49.1	1.38	1.38	1.38	1.38	3.38	3.38
26	51.1	1.39	1.39	1.39	1.39	3.39	3.39
27	53.2	1.40	1.40	1.40	1.40	3.40	3.40
28	55.2	1.41	1.41	1.41	1.41	3.41	3.41
29	57.3	1.42	1.42	1.42	1.42	3.42	3.42
30	59.3	1.43	1.43	1.43	1.43	3.43	3.43
31	61.4	1.44	1.44	1.44	1.44	3.44	3.44
32	63.4	1.45	1.45	1.45	1.45	3.45	3.45
33	65.5	1.45	1.45	1.45	1.45	3.45	3.45
34	67.5	1.46	1.46	1.46	1.46	3.46	3.46
35	69.5	1.47	1.47	1.47	1.47	3.47	3.47
36	71.6	1.47	1.47	1.47	1.47	3.47	3.47
37	73.6	1.48	1.48	1.48	1.48	1.48	1.48
38	75.7	1.48	1.48	1.48	1.48	1.48	1.48
39	77.7	1.49	1.49	1.49	1.49	1.49	1.49
40	79.8	1.49	1.49	1.49	1.49	1.49	1.49
41	81.8	1.49	1.49	1.49	1.49	1.49	1.49
42	83.9	1.50	1.50	1.50	1.50	1.50	1.50
43	85.9	1.50	1.50	1.50	1.50	1.50	1.50
44	88.0	1.50	1.50	1.50	1.50	1.50	1.50
45	90.0	1.50	1.50	1.50	1.50	1.50	1.50

NON-DIM CLEARANCE DISTRIBUTION(H/C) FOR PAD NUMBER 1

	I =	7	8	9	10	11	12
	AXIAL LENGTH METERS	0.003	0.004	0.004	0.005	0.006	0.006
J	DEG.						
1	0.0	1.00	1.00	1.00	1.00	1.00	1.00
2	2.0	1.02	1.02	1.02	1.02	1.02	1.02
3	4.1	3.04	3.04	3.04	3.04	3.04	3.04
4	6.1	3.05	3.05	3.05	3.05	3.05	3.05
5	8.2	3.07	3.07	3.07	3.07	3.07	3.07
6	10.2	3.09	3.09	3.09	3.09	3.09	3.09
7	12.3	3.11	3.11	3.11	3.11	3.11	3.11
8	14.3	3.12	3.12	3.12	3.12	3.12	3.12
9	16.4	3.14	3.14	3.14	3.14	3.14	3.14
10	18.4	3.16	3.16	3.16	3.16	3.16	3.16
11	20.5	3.17	3.17	3.17	3.17	3.17	3.17
12	22.5	3.19	3.19	3.19	3.19	3.19	3.19
13	24.5	3.21	3.21	3.21	3.21	3.21	3.21
14	26.6	3.22	3.22	3.22	3.22	3.22	3.22
15	28.6	3.24	3.24	3.24	3.24	3.24	3.24
16	30.7	3.26	3.26	3.26	3.26	3.26	3.26
17	32.7	3.27	3.27	3.27	3.27	3.27	3.27
18	34.8	3.29	3.29	3.29	3.29	3.29	3.29
19	36.8	3.30	3.30	3.30	3.30	3.30	3.30
20	38.9	3.31	3.31	3.31	3.31	3.31	3.31
21	40.9	3.33	3.33	3.33	3.33	3.33	3.33
22	43.0	3.34	3.34	3.34	3.34	3.34	3.34
23	45.0	3.35	3.35	3.35	3.35	3.35	3.35
24	47.0	3.37	3.37	3.37	3.37	3.37	3.37
25	49.1	3.38	3.38	3.38	3.38	3.38	3.38
26	51.1	3.39	3.39	3.39	3.39	3.39	3.39
27	53.2	3.40	3.40	3.40	3.40	3.40	3.40
28	55.2	3.41	3.41	3.41	3.41	3.41	3.41
29	57.3	3.42	3.42	3.42	3.42	3.42	3.42
30	59.3	3.43	3.43	3.43	3.43	3.43	3.43
31	61.4	3.44	3.44	3.44	3.44	3.44	3.44
32	63.4	3.45	3.45	3.45	3.45	3.45	3.45
33	65.5	3.45	3.45	3.45	3.45	3.45	3.45
34	67.5	3.46	3.46	3.46	3.46	3.46	3.46
35	69.5	3.47	3.47	3.47	3.47	3.47	3.47
36	71.6	3.47	3.47	3.47	3.47	3.47	3.47
37	73.6	1.48	1.48	1.48	1.48	1.48	1.48
38	75.7	1.48	1.48	1.48	1.48	1.48	1.48
39	77.7	1.49	1.49	1.49	1.49	1.49	1.49
40	79.8	1.49	1.49	1.49	1.49	1.49	1.49
41	81.8	1.49	1.49	1.49	1.49	1.49	1.49
42	83.9	1.50	1.50	1.50	1.50	1.50	1.50
43	85.9	1.50	1.50	1.50	1.50	1.50	1.50
44	88.0	1.50	1.50	1.50	1.50	1.50	1.50
45	90.0	1.50	1.50	1.50	1.50	1.50	1.50

NON-DIM CLEARANCE DISTRIBUTION(H/C) FOR PAD NUMBER 1

	I =	13	14	15	16	17	18
AXIAL LENGTH METERS		0.007	0.007	0.008	0.008	0.009	0.010
J	DEG.						
1	0.0	1.00	1.00	1.00	1.00	1.00	1.00
2	2.0	1.02	1.02	1.02	1.02	1.02	1.02
3	4.1	3.04	3.04	3.04	3.04	3.04	3.04
4	6.1	3.05	3.05	3.05	3.05	3.05	3.05
5	8.2	3.07	3.07	3.07	3.07	3.07	3.07
6	10.2	3.09	3.09	3.09	3.09	3.09	3.09
7	12.3	3.11	3.11	3.11	3.11	3.11	3.11
8	14.3	3.12	3.12	3.12	3.12	3.12	3.12
9	16.4	3.14	3.14	3.14	3.14	3.14	3.14
10	18.4	3.16	3.16	3.16	3.16	3.16	3.16
11	20.5	3.17	3.17	3.17	3.17	3.17	3.17
12	22.5	3.19	3.19	3.19	3.19	3.19	3.19
13	24.5	3.21	3.21	3.21	3.21	3.21	3.21
14	26.6	3.22	3.22	3.22	3.22	3.22	3.22
15	28.6	3.24	3.24	3.24	3.24	3.24	3.24
16	30.7	3.26	3.26	3.26	3.26	3.26	3.26
17	32.7	3.27	3.27	3.27	3.27	3.27	3.27
18	34.8	3.29	3.29	3.29	3.29	3.29	3.29
19	36.8	3.30	3.30	3.30	3.30	3.30	3.30
20	38.9	3.31	3.31	3.31	3.31	3.31	3.31
21	40.9	3.33	3.33	3.33	3.33	3.33	3.33
22	43.0	3.34	3.34	3.34	3.34	3.34	3.34
23	45.0	3.35	3.35	3.35	3.35	3.35	3.35
24	47.0	3.37	3.37	3.37	3.37	3.37	3.37
25	49.1	3.38	3.38	3.38	3.38	3.38	3.38
26	51.1	3.39	3.39	3.39	3.39	3.39	3.39
27	53.2	3.40	3.40	3.40	3.40	3.40	3.40
28	55.2	3.41	3.41	3.41	3.41	3.41	3.41
29	57.3	3.42	3.42	3.42	3.42	3.42	3.42
30	59.3	3.43	3.43	3.43	3.43	3.43	3.43
31	61.4	3.44	3.44	3.44	3.44	3.44	3.44
32	63.4	3.45	3.45	3.45	3.45	3.45	3.45
33	65.5	3.45	3.45	3.45	3.45	3.45	3.45
34	67.5	3.46	3.46	3.46	3.46	3.46	3.46
35	69.5	3.47	3.47	3.47	3.47	3.47	3.47
36	71.6	3.47	3.47	3.47	3.47	3.47	3.47
37	73.6	1.48	1.48	1.48	1.48	1.48	1.48
38	75.7	1.48	1.48	1.48	1.48	1.48	1.48
39	77.7	1.49	1.49	1.49	1.49	1.49	1.49
40	79.8	1.49	1.49	1.49	1.49	1.49	1.49
41	81.8	1.49	1.49	1.49	1.49	1.49	1.49
42	83.9	1.50	1.50	1.50	1.50	1.50	1.50
43	85.9	1.50	1.50	1.50	1.50	1.50	1.50
44	88.0	1.50	1.50	1.50	1.50	1.50	1.50
45	90.0	1.50	1.50	1.50	1.50	1.50	1.50

NON-DIM CLEARANCE DISTRIBUTION(H/C) FOR PAD NUMBER 1

	I =	19	20	21	22	23
AXIAL LENGTH METERS		0.010	0.011	0.011	0.012	0.012
J	DEG.					
1	0.0	1.00	1.00	1.00	1.00	1.00
2	2.0	1.02	1.02	1.02	1.02	1.02
3	4.1	3.04	1.04	1.04	1.04	1.04
4	6.1	3.05	1.05	1.05	1.05	1.05
5	8.2	3.07	1.07	1.07	1.07	1.07
6	10.2	3.09	1.09	1.09	1.09	1.09
7	12.3	3.11	1.11	1.11	1.11	1.11
8	14.3	3.12	1.12	1.12	1.12	1.12
9	16.4	3.14	1.14	1.14	1.14	1.14
10	18.4	3.16	1.16	1.16	1.16	1.16
11	20.5	3.17	1.17	1.17	1.17	1.17
12	22.5	3.19	1.19	1.19	1.19	1.19
13	24.5	3.21	1.21	1.21	1.21	1.21
14	26.6	3.22	1.22	1.22	1.22	1.22
15	28.6	3.24	1.24	1.24	1.24	1.24
16	30.7	3.26	1.26	1.26	1.26	1.26
17	32.7	3.27	1.27	1.27	1.27	1.27
18	34.8	3.29	1.29	1.29	1.29	1.29
19	36.8	3.30	1.30	1.30	1.30	1.30
20	38.9	3.31	1.31	1.31	1.31	1.31
21	40.9	3.33	1.33	1.33	1.33	1.33
22	43.0	3.34	1.34	1.34	1.34	1.34
23	45.0	3.35	1.35	1.35	1.35	1.35
24	47.0	3.37	1.37	1.37	1.37	1.37
25	49.1	3.38	1.38	1.38	1.38	1.38
26	51.1	3.39	1.39	1.39	1.39	1.39
27	53.2	3.40	1.40	1.40	1.40	1.40
28	55.2	3.41	1.41	1.41	1.41	1.41
29	57.3	3.42	1.42	1.42	1.42	1.42
30	59.3	3.43	1.43	1.43	1.43	1.43
31	61.4	3.44	1.44	1.44	1.44	1.44
32	63.4	3.45	1.45	1.45	1.45	1.45
33	65.5	3.45	1.45	1.45	1.45	1.45
34	67.5	3.46	1.46	1.46	1.46	1.46
35	69.5	3.47	1.47	1.47	1.47	1.47
36	71.6	3.47	1.47	1.47	1.47	1.47
37	73.6	1.48	1.48	1.48	1.48	1.48
38	75.7	1.48	1.48	1.48	1.48	1.48
39	77.7	1.49	1.49	1.49	1.49	1.49
40	79.8	1.49	1.49	1.49	1.49	1.49
41	81.8	1.49	1.49	1.49	1.49	1.49
42	83.9	1.50	1.50	1.50	1.50	1.50
43	85.9	1.50	1.50	1.50	1.50	1.50
44	88.0	1.50	1.50	1.50	1.50	1.50
45	90.0	1.50	1.50	1.50	1.50	1.50

MIN. CLEAR.= 1.0000 AT 0.00000E+00 DEGREES

MAX. CLEAR.= 3.4744 AT 71.591 DEGREES

PRESSURE DISTRIBUTION (MEGA - PASCAL) FOR PAD NUMBER 1

	I =	1	2	3	4	5	6
AXIAL LENGTH METERS		0.000	0.001	0.001	0.002	0.002	0.003
J	DEG.						
1	0.0	1.38	1.38	1.38	1.38	1.38	1.38
2	2.0	1.38	1.38	1.38	1.38	1.38	1.38
3	4.1	1.38	1.38	1.38	1.38	1.38	1.38
4	6.1	1.38	1.38	1.38	1.38	1.38	1.38
5	8.2	1.38	1.38	1.38	1.38	1.38	1.38
6	10.2	1.38	1.38	1.38	1.38	1.38	1.38
7	12.3	1.38	1.38	1.38	1.38	1.38	1.38
8	14.3	1.38	1.38	1.38	1.38	1.38	1.38
9	16.4	1.38	1.38	1.38	1.38	1.38	1.38
10	18.4	1.38	1.38	1.38	1.38	1.38	1.38
11	20.5	1.38	1.38	1.38	1.38	1.38	1.38
12	22.5	1.38	1.38	1.38	1.38	1.38	1.38
13	24.5	1.38	1.38	1.38	1.38	1.38	1.38
14	26.6	1.38	1.38	1.38	1.38	1.38	1.38
15	28.6	1.38	1.38	1.38	1.38	1.38	1.38
16	30.7	1.38	1.38	1.38	1.38	1.38	1.38
17	32.7	1.38	1.38	1.38	1.38	1.38	1.38
18	34.8	1.38	1.38	1.38	1.38	1.38	1.38
19	36.8	1.38	1.38	1.38	1.38	1.38	1.38
20	38.9	1.38	1.38	1.38	1.38	1.39	1.39
21	40.9	1.38	1.38	1.38	1.38	1.39	1.39
22	43.0	1.38	1.38	1.38	1.39	1.39	1.39
23	45.0	1.38	1.38	1.38	1.39	1.39	1.39
24	47.0	1.38	1.38	1.39	1.39	1.39	1.39
25	49.1	1.38	1.38	1.39	1.39	1.40	1.40
26	51.1	1.38	1.38	1.39	1.39	1.40	1.40
27	53.2	1.38	1.38	1.39	1.40	1.40	1.40
28	55.2	1.38	1.39	1.39	1.40	1.40	1.40
29	57.3	1.38	1.39	1.39	1.40	1.41	1.41
30	59.3	1.38	1.39	1.40	1.40	1.41	1.41
31	61.4	1.38	1.39	1.40	1.41	1.42	1.42
32	63.4	1.38	1.39	1.40	1.41	1.42	1.42
33	65.5	1.38	1.39	1.40	1.41	1.43	1.43
34	67.5	1.38	1.39	1.40	1.42	1.43	1.43
35	69.5	1.38	1.39	1.41	1.42	1.44	1.44
36	71.6	1.38	1.39	1.41	1.42	1.44	1.45
37	73.6	1.38	1.39	1.40	1.41	1.42	1.43
38	75.7	1.38	1.39	1.40	1.40	1.41	1.42
39	77.7	1.38	1.38	1.39	1.40	1.40	1.41
40	79.8	1.38	1.38	1.39	1.39	1.39	1.40
41	81.8	1.38	1.38	1.38	1.39	1.39	1.39
42	83.9	1.38	1.38	1.38	1.38	1.38	1.38
43	85.9	1.38	1.38	1.38	1.38	1.38	1.38
44	88.0	1.38	1.38	1.38	1.38	1.38	1.38
45	90.0	1.38	1.38	1.38	1.38	1.38	1.38

PRESSURE DISTRIBUTION (MEGA - PASCAL) FOR PAD NUMBER 1

	I =	7	8	9	10	11	12
AXIAL LENGTH METERS		0.003	0.004	0.004	0.005	0.006	0.006
J	DEG.						
1	0.0	1.38	1.38	1.38	1.38	1.38	1.38
2	2.0	1.38	1.38	1.38	1.38	1.38	1.38
3	4.1	1.38	1.38	1.38	1.38	1.38	1.38
4	6.1	1.38	1.38	1.38	1.38	1.38	1.38
5	8.2	1.38	1.38	1.38	1.38	1.38	1.38
6	10.2	1.38	1.38	1.38	1.38	1.38	1.38
7	12.3	1.38	1.38	1.38	1.38	1.38	1.38
8	14.3	1.38	1.38	1.38	1.38	1.38	1.38
9	16.4	1.38	1.38	1.38	1.38	1.38	1.38
10	18.4	1.38	1.38	1.38	1.38	1.38	1.38
11	20.5	1.38	1.38	1.38	1.38	1.38	1.38
12	22.5	1.38	1.38	1.38	1.38	1.38	1.38
13	24.5	1.38	1.38	1.38	1.38	1.38	1.38
14	26.6	1.38	1.38	1.38	1.38	1.38	1.38
15	28.6	1.38	1.38	1.38	1.38	1.38	1.38
16	30.7	1.38	1.38	1.38	1.38	1.38	1.38
17	32.7	1.38	1.38	1.38	1.38	1.38	1.38
18	34.8	1.38	1.38	1.38	1.38	1.38	1.38
19	36.8	1.38	1.38	1.38	1.38	1.38	1.38
20	38.9	1.39	1.39	1.39	1.39	1.39	1.39
21	40.9	1.39	1.39	1.39	1.39	1.39	1.39
22	43.0	1.39	1.39	1.39	1.39	1.39	1.39
23	45.0	1.39	1.39	1.39	1.39	1.39	1.39
24	47.0	1.39	1.39	1.39	1.39	1.39	1.39
25	49.1	1.40	1.40	1.40	1.40	1.40	1.40
26	51.1	1.40	1.40	1.40	1.40	1.40	1.40
27	53.2	1.40	1.40	1.40	1.40	1.40	1.40
28	55.2	1.41	1.41	1.41	1.41	1.41	1.41
29	57.3	1.41	1.41	1.41	1.41	1.41	1.41
30	59.3	1.41	1.41	1.41	1.41	1.41	1.41
31	61.4	1.42	1.42	1.42	1.42	1.42	1.42
32	63.4	1.42	1.42	1.42	1.42	1.42	1.42
33	65.5	1.43	1.43	1.43	1.43	1.43	1.43
34	67.5	1.43	1.44	1.44	1.44	1.44	1.44
35	69.5	1.44	1.44	1.44	1.44	1.44	1.44
36	71.6	1.45	1.45	1.45	1.45	1.45	1.45
37	73.6	1.43	1.44	1.44	1.44	1.44	1.44
38	75.7	1.42	1.42	1.42	1.43	1.43	1.43
39	77.7	1.41	1.41	1.41	1.42	1.42	1.42
40	79.8	1.40	1.40	1.40	1.41	1.41	1.41
41	81.8	1.39	1.39	1.40	1.40	1.40	1.40
42	83.9	1.39	1.39	1.39	1.39	1.39	1.39
43	85.9	1.38	1.38	1.38	1.38	1.38	1.38
44	88.0	1.38	1.38	1.38	1.38	1.38	1.38
45	90.0	1.38	1.38	1.38	1.38	1.38	1.38

PRESSURE DISTRIBUTION (MEGA - PASCAL) FOR PAD NUMBER 1

	I =	13	14	15	16	17	18
AXIAL LENGTH METERS		0.007	0.007	0.008	0.008	0.009	0.010
J	DEG.						
1	0.0	1.38	1.38	1.38	1.38	1.38	1.38
2	2.0	1.38	1.38	1.38	1.38	1.38	1.38
3	4.1	1.38	1.38	1.38	1.38	1.38	1.38
4	6.1	1.38	1.38	1.38	1.38	1.38	1.38
5	8.2	1.38	1.38	1.38	1.38	1.38	1.38
6	10.2	1.38	1.38	1.38	1.38	1.38	1.38
7	12.3	1.38	1.38	1.38	1.38	1.38	1.38
8	14.3	1.38	1.38	1.38	1.38	1.38	1.38
9	16.4	1.38	1.38	1.38	1.38	1.38	1.38
10	18.4	1.38	1.38	1.38	1.38	1.38	1.38
11	20.5	1.38	1.38	1.38	1.38	1.38	1.38
12	22.5	1.38	1.38	1.38	1.38	1.38	1.38
13	24.5	1.38	1.38	1.38	1.38	1.38	1.38
14	26.6	1.38	1.38	1.38	1.38	1.38	1.38
15	28.6	1.38	1.38	1.38	1.38	1.38	1.38
16	30.7	1.38	1.38	1.38	1.38	1.38	1.38
17	32.7	1.38	1.38	1.38	1.38	1.38	1.38
18	34.8	1.38	1.38	1.38	1.38	1.38	1.38
19	36.8	1.38	1.38	1.38	1.38	1.38	1.38
20	38.9	1.39	1.39	1.39	1.39	1.39	1.39
21	40.9	1.39	1.39	1.39	1.39	1.39	1.39
22	43.0	1.39	1.39	1.39	1.39	1.39	1.39
23	45.0	1.39	1.39	1.39	1.39	1.39	1.39
24	47.0	1.39	1.39	1.39	1.39	1.39	1.39
25	49.1	1.40	1.40	1.40	1.40	1.40	1.40
26	51.1	1.40	1.40	1.40	1.40	1.40	1.40
27	53.2	1.40	1.40	1.40	1.40	1.40	1.40
28	55.2	1.41	1.41	1.41	1.41	1.41	1.40
29	57.3	1.41	1.41	1.41	1.41	1.41	1.41
30	59.3	1.41	1.41	1.41	1.41	1.41	1.41
31	61.4	1.42	1.42	1.42	1.42	1.42	1.42
32	63.4	1.42	1.42	1.42	1.42	1.42	1.42
33	65.5	1.43	1.43	1.43	1.43	1.43	1.43
34	67.5	1.44	1.44	1.44	1.44	1.43	1.43
35	69.5	1.44	1.44	1.44	1.44	1.44	1.44
36	71.6	1.45	1.45	1.45	1.45	1.45	1.45
37	73.6	1.44	1.44	1.44	1.44	1.43	1.43
38	75.7	1.43	1.43	1.42	1.42	1.42	1.42
39	77.7	1.42	1.42	1.41	1.41	1.41	1.41
40	79.8	1.41	1.41	1.40	1.40	1.40	1.40
41	81.8	1.40	1.40	1.40	1.39	1.39	1.39
42	83.9	1.39	1.39	1.39	1.39	1.39	1.38
43	85.9	1.38	1.38	1.38	1.38	1.38	1.38
44	88.0	1.38	1.38	1.38	1.38	1.38	1.38
45	90.0	1.38	1.38	1.38	1.38	1.38	1.38

PRESSURE DISTRIBUTION (MEGA - PASCAL) FOR PAD NUMBER 1

	I =	19	20	21	22	23
AXIAL LENGTH METERS		0.010	0.011	0.011	0.012	0.012
J	DEG.					
1	0.0	1.38	1.38	1.38	1.38	1.38
2	2.0	1.38	1.38	1.38	1.38	1.38
3	4.1	1.38	1.38	1.38	1.38	1.38
4	6.1	1.38	1.38	1.38	1.38	1.38
5	8.2	1.38	1.38	1.38	1.38	1.38
6	10.2	1.38	1.38	1.38	1.38	1.38
7	12.3	1.38	1.38	1.38	1.38	1.38
8	14.3	1.38	1.38	1.38	1.38	1.38
9	16.4	1.38	1.38	1.38	1.38	1.38
10	18.4	1.38	1.38	1.38	1.38	1.38
11	20.5	1.38	1.38	1.38	1.38	1.38
12	22.5	1.38	1.38	1.38	1.38	1.38
13	24.5	1.38	1.38	1.38	1.38	1.38
14	26.6	1.38	1.38	1.38	1.38	1.38
15	28.6	1.38	1.38	1.38	1.38	1.38
16	30.7	1.38	1.38	1.38	1.38	1.38
17	32.7	1.38	1.38	1.38	1.38	1.38
18	34.8	1.38	1.38	1.38	1.38	1.38
19	36.8	1.38	1.38	1.38	1.38	1.38
20	38.9	1.39	1.38	1.38	1.38	1.38
21	40.9	1.39	1.38	1.38	1.38	1.38
22	43.0	1.39	1.39	1.38	1.38	1.38
23	45.0	1.39	1.39	1.38	1.38	1.38
24	47.0	1.39	1.39	1.39	1.38	1.38
25	49.1	1.40	1.39	1.39	1.38	1.38
26	51.1	1.40	1.39	1.39	1.38	1.38
27	53.2	1.40	1.40	1.39	1.38	1.38
28	55.2	1.40	1.40	1.39	1.39	1.38
29	57.3	1.41	1.40	1.39	1.39	1.38
30	59.3	1.41	1.40	1.40	1.39	1.38
31	61.4	1.42	1.41	1.40	1.39	1.38
32	63.4	1.42	1.41	1.40	1.39	1.38
33	65.5	1.43	1.41	1.40	1.39	1.38
34	67.5	1.43	1.42	1.40	1.39	1.38
35	69.5	1.44	1.42	1.41	1.39	1.38
36	71.6	1.44	1.42	1.41	1.39	1.38
37	73.6	1.42	1.41	1.40	1.39	1.38
38	75.7	1.41	1.40	1.40	1.39	1.38
39	77.7	1.40	1.40	1.39	1.38	1.38
40	79.8	1.39	1.39	1.39	1.38	1.38
41	81.8	1.39	1.39	1.38	1.38	1.38
42	83.9	1.38	1.38	1.38	1.38	1.38
43	85.9	1.38	1.38	1.38	1.38	1.38
44	88.0	1.38	1.38	1.38	1.38	1.38
45	90.0	1.38	1.38	1.38	1.38	1.38

MIN. PRESS= 1.3764 AT 14.318 DEGREES

MAX. PRESS= 1.4533 AT 71.591 DEGREES

NON-DIM CLEARANCE DISTRIBUTION(H/C) FOR PAD NUMBER 2

	I =	1	2	3	4	5	6
	AXIAL LENGTH METERS	0.000	0.001	0.001	0.002	0.002	0.003
J	DEG.						
1	90.0	1.50	1.50	1.50	1.50	1.50	1.50
2	92.0	1.50	1.50	1.50	1.50	1.50	1.50
3	94.1	1.50	1.50	1.50	1.50	3.50	3.50
4	96.1	1.50	1.50	1.50	1.50	3.50	3.50
5	98.2	1.49	1.49	1.49	1.49	3.49	3.49
6	100.2	1.49	1.49	1.49	1.49	3.49	3.49
7	102.3	1.49	1.49	1.49	1.49	3.49	3.49
8	104.3	1.48	1.48	1.48	1.48	3.48	3.48
9	106.4	1.48	1.48	1.48	1.48	3.48	3.48
10	108.4	1.47	1.47	1.47	1.47	3.47	3.47
11	110.5	1.47	1.47	1.47	1.47	3.47	3.47
12	112.5	1.46	1.46	1.46	1.46	3.46	3.46
13	114.5	1.45	1.45	1.45	1.45	3.45	3.45
14	116.6	1.45	1.45	1.45	1.45	3.45	3.45
15	118.6	1.44	1.44	1.44	1.44	3.44	3.44
16	120.7	1.43	1.43	1.43	1.43	3.43	3.43
17	122.7	1.42	1.42	1.42	1.42	3.42	3.42
18	124.8	1.41	1.41	1.41	1.41	3.41	3.41
19	126.8	1.40	1.40	1.40	1.40	3.40	3.40
20	128.9	1.39	1.39	1.39	1.39	3.39	3.39
21	130.9	1.38	1.38	1.38	1.38	3.38	3.38
22	133.0	1.37	1.37	1.37	1.37	3.37	3.37
23	135.0	1.35	1.35	1.35	1.35	3.35	3.35
24	137.0	1.34	1.34	1.34	1.34	3.34	3.34
25	139.1	1.33	1.33	1.33	1.33	3.33	3.33
26	141.1	1.31	1.31	1.31	1.31	3.31	3.31
27	143.2	1.30	1.30	1.30	1.30	3.30	3.30
28	145.2	1.29	1.29	1.29	1.29	3.29	3.29
29	147.3	1.27	1.27	1.27	1.27	3.27	3.27
30	149.3	1.26	1.26	1.26	1.26	3.26	3.26
31	151.4	1.24	1.24	1.24	1.24	3.24	3.24
32	153.4	1.22	1.22	1.22	1.22	3.22	3.22
33	155.5	1.21	1.21	1.21	1.21	3.21	3.21
34	157.5	1.19	1.19	1.19	1.19	3.19	3.19
35	159.5	1.17	1.17	1.17	1.17	3.17	3.17
36	161.6	1.16	1.16	1.16	1.16	3.16	3.16
37	163.6	1.14	1.14	1.14	1.14	1.14	1.14
38	165.7	1.12	1.12	1.12	1.12	1.12	1.12
39	167.7	1.11	1.11	1.11	1.11	1.11	1.11
40	169.8	1.09	1.09	1.09	1.09	1.09	1.09
41	171.8	1.07	1.07	1.07	1.07	1.07	1.07
42	173.9	1.05	1.05	1.05	1.05	1.05	1.05
43	175.9	1.04	1.04	1.04	1.04	1.04	1.04
44	178.0	1.02	1.02	1.02	1.02	1.02	1.02
45	180.0	1.000	1.000	1.000	1.000	1.000	1.000

NON-DIM CLEARANCE DISTRIBUTION(H/C) FOR PAD NUMBER 2

	I =	7	8	9	10	11	12
	AXIAL LENGTH METERS	0.003	0.004	0.004	0.005	0.006	0.006
J	DEG.						
1	90.0	1.50	1.50	1.50	1.50	1.50	1.50
2	92.0	1.50	1.50	1.50	1.50	1.50	1.50
3	94.1	3.50	3.50	3.50	3.50	3.50	3.50
4	96.1	3.50	3.50	3.50	3.50	3.50	3.50
5	98.2	3.49	3.49	3.49	3.49	3.49	3.49
6	100.2	3.49	3.49	3.49	3.49	3.49	3.49
7	102.3	3.49	3.49	3.49	3.49	3.49	3.49
8	104.3	3.48	3.48	3.48	3.48	3.48	3.48
9	106.4	3.48	3.48	3.48	3.48	3.48	3.48
10	108.4	3.47	3.47	3.47	3.47	3.47	3.47
11	110.5	3.47	3.47	3.47	3.47	3.47	3.47
12	112.5	3.46	3.46	3.46	3.46	3.46	3.46
13	114.5	3.45	3.45	3.45	3.45	3.45	3.45
14	116.6	3.45	3.45	3.45	3.45	3.45	3.45
15	118.6	3.44	3.44	3.44	3.44	3.44	3.44
16	120.7	3.43	3.43	3.43	3.43	3.43	3.43
17	122.7	3.42	3.42	3.42	3.42	3.42	3.42
18	124.8	3.41	3.41	3.41	3.41	3.41	3.41
19	126.8	3.40	3.40	3.40	3.40	3.40	3.40
20	128.9	3.39	3.39	3.39	3.39	3.39	3.39
21	130.9	3.38	3.38	3.38	3.38	3.38	3.38
22	133.0	3.37	3.37	3.37	3.37	3.37	3.37
23	135.0	3.35	3.35	3.35	3.35	3.35	3.35
24	137.0	3.34	3.34	3.34	3.34	3.34	3.34
25	139.1	3.33	3.33	3.33	3.33	3.33	3.33
26	141.1	3.31	3.31	3.31	3.31	3.31	3.31
27	143.2	3.30	3.30	3.30	3.30	3.30	3.30
28	145.2	3.29	3.29	3.29	3.29	3.29	3.29
29	147.3	3.27	3.27	3.27	3.27	3.27	3.27
30	149.3	3.26	3.26	3.26	3.26	3.26	3.26
31	151.4	3.24	3.24	3.24	3.24	3.24	3.24
32	153.4	3.22	3.22	3.22	3.22	3.22	3.22
33	155.5	3.21	3.21	3.21	3.21	3.21	3.21
34	157.5	3.19	3.19	3.19	3.19	3.19	3.19
35	159.5	3.17	3.17	3.17	3.17	3.17	3.17
36	161.6	3.16	3.16	3.16	3.16	3.16	3.16
37	163.6	1.14	1.14	1.14	1.14	1.14	1.14
38	165.7	1.12	1.12	1.12	1.12	1.12	1.12
39	167.7	1.11	1.11	1.11	1.11	1.11	1.11
40	169.8	1.09	1.09	1.09	1.09	1.09	1.09
41	171.8	1.07	1.07	1.07	1.07	1.07	1.07
42	173.9	1.05	1.05	1.05	1.05	1.05	1.05
43	175.9	1.04	1.04	1.04	1.04	1.04	1.04
44	178.0	1.02	1.02	1.02	1.02	1.02	1.02
45	180.0	1.000	1.000	1.000	1.000	1.000	1.000

NON-DIM CLEARANCE DISTRIBUTION(H/C) FOR PAD NUMBER 2

	I =	13	14	15	16	17	18
	AXIAL LENGTH METERS	0.007	0.007	0.008	0.008	0.009	0.010
J	DEG.						
1	90.0	1.50	1.50	1.50	1.50	1.50	1.50
2	92.0	1.50	1.50	1.50	1.50	1.50	1.50
3	94.1	3.50	3.50	3.50	3.50	3.50	3.50
4	96.1	3.50	3.50	3.50	3.50	3.50	3.50
5	98.2	3.49	3.49	3.49	3.49	3.49	3.49
6	100.2	3.49	3.49	3.49	3.49	3.49	3.49
7	102.3	3.49	3.49	3.49	3.49	3.49	3.49
8	104.3	3.48	3.48	3.48	3.48	3.48	3.48
9	106.4	3.48	3.48	3.48	3.48	3.48	3.48
10	108.4	3.47	3.47	3.47	3.47	3.47	3.47
11	110.5	3.47	3.47	3.47	3.47	3.47	3.47
12	112.5	3.46	3.46	3.46	3.46	3.46	3.46
13	114.5	3.45	3.45	3.45	3.45	3.45	3.45
14	116.6	3.45	3.45	3.45	3.45	3.45	3.45
15	118.6	3.44	3.44	3.44	3.44	3.44	3.44
16	120.7	3.43	3.43	3.43	3.43	3.43	3.43
17	122.7	3.42	3.42	3.42	3.42	3.42	3.42
18	124.8	3.41	3.41	3.41	3.41	3.41	3.41
19	126.8	3.40	3.40	3.40	3.40	3.40	3.40
20	128.9	3.39	3.39	3.39	3.39	3.39	3.39
21	130.9	3.38	3.38	3.38	3.38	3.38	3.38
22	133.0	3.37	3.37	3.37	3.37	3.37	3.37
23	135.0	3.35	3.35	3.35	3.35	3.35	3.35
24	137.0	3.34	3.34	3.34	3.34	3.34	3.34
25	139.1	3.33	3.33	3.33	3.33	3.33	3.33
26	141.1	3.31	3.31	3.31	3.31	3.31	3.31
27	143.2	3.30	3.30	3.30	3.30	3.30	3.30
28	145.2	3.29	3.29	3.29	3.29	3.29	3.29
29	147.3	3.27	3.27	3.27	3.27	3.27	3.27
30	149.3	3.26	3.26	3.26	3.26	3.26	3.26
31	151.4	3.24	3.24	3.24	3.24	3.24	3.24
32	153.4	3.22	3.22	3.22	3.22	3.22	3.22
33	155.5	3.21	3.21	3.21	3.21	3.21	3.21
34	157.5	3.19	3.19	3.19	3.19	3.19	3.19
35	159.5	3.17	3.17	3.17	3.17	3.17	3.17
36	161.6	3.16	3.16	3.16	3.16	3.16	3.16
37	163.6	1.14	1.14	1.14	1.14	1.14	1.14
38	165.7	1.12	1.12	1.12	1.12	1.12	1.12
39	167.7	1.11	1.11	1.11	1.11	1.11	1.11
40	169.8	1.09	1.09	1.09	1.09	1.09	1.09
41	171.8	1.07	1.07	1.07	1.07	1.07	1.07
42	173.9	1.05	1.05	1.05	1.05	1.05	1.05
43	175.9	1.04	1.04	1.04	1.04	1.04	1.04
44	178.0	1.02	1.02	1.02	1.02	1.02	1.02
45	180.0	1.000	1.000	1.000	1.000	1.000	1.000

NON-DIM CLEARANCE DISTRIBUTION(H/C) FOR PAD NUMBER 2

	I =	19	20	21	22	23
	AXIAL LENGTH METERS	0.010	0.011	0.011	0.012	0.012
J	DEG.					
1	90.0	1.50	1.50	1.50	1.50	1.50
2	92.0	1.50	1.50	1.50	1.50	1.50
3	94.1	3.50	1.50	1.50	1.50	1.50
4	96.1	3.50	1.50	1.50	1.50	1.50
5	98.2	3.49	1.49	1.49	1.49	1.49
6	100.2	3.49	1.49	1.49	1.49	1.49
7	102.3	3.49	1.49	1.49	1.49	1.49
8	104.3	3.48	1.48	1.48	1.48	1.48
9	106.4	3.48	1.48	1.48	1.48	1.48
10	108.4	3.47	1.47	1.47	1.47	1.47
11	110.5	3.47	1.47	1.47	1.47	1.47
12	112.5	3.46	1.46	1.46	1.46	1.46
13	114.5	3.45	1.45	1.45	1.45	1.45
14	116.6	3.45	1.45	1.45	1.45	1.45
15	118.6	3.44	1.44	1.44	1.44	1.44
16	120.7	3.43	1.43	1.43	1.43	1.43
17	122.7	3.42	1.42	1.42	1.42	1.42
18	124.8	3.41	1.41	1.41	1.41	1.41
19	126.8	3.40	1.40	1.40	1.40	1.40
20	128.9	3.39	1.39	1.39	1.39	1.39
21	130.9	3.38	1.38	1.38	1.38	1.38
22	133.0	3.37	1.37	1.37	1.37	1.37
23	135.0	3.35	1.35	1.35	1.35	1.35
24	137.0	3.34	1.34	1.34	1.34	1.34
25	139.1	3.33	1.33	1.33	1.33	1.33
26	141.1	3.31	1.31	1.31	1.31	1.31
27	143.2	3.30	1.30	1.30	1.30	1.30
28	145.2	3.29	1.29	1.29	1.29	1.29
29	147.3	3.27	1.27	1.27	1.27	1.27
30	149.3	3.26	1.26	1.26	1.26	1.26
31	151.4	3.24	1.24	1.24	1.24	1.24
32	153.4	3.22	1.22	1.22	1.22	1.22
33	155.5	3.21	1.21	1.21	1.21	1.21
34	157.5	3.19	1.19	1.19	1.19	1.19
35	159.5	3.17	1.17	1.17	1.17	1.17
36	161.6	3.16	1.16	1.16	1.16	1.16
37	163.6	1.14	1.14	1.14	1.14	1.14
38	165.7	1.12	1.12	1.12	1.12	1.12
39	167.7	1.11	1.11	1.11	1.11	1.11
40	169.8	1.09	1.09	1.09	1.09	1.09
41	171.8	1.07	1.07	1.07	1.07	1.07
42	173.9	1.05	1.05	1.05	1.05	1.05
43	175.9	1.04	1.04	1.04	1.04	1.04
44	178.0	1.02	1.02	1.02	1.02	1.02
45	180.0	1.000	1.000	1.000	1.000	1.000

MIN. CLEAR.= 1.00000 AT 180.00 DEGREES

MAX. CLEAR.= 3.4987 AT 94.091 DEGREES

PRESSURE DISTRIBUTION (MEGA - PASCAL) FOR PAD NUMBER 2

	I =	1	2	3	4	5	6
	AXIAL LENGTH METERS	0.000	0.001	0.001	0.002	0.002	0.003
J	DEG.						
1	90.0	1.38	1.38	1.38	1.38	1.38	1.38
2	92.0	1.38	1.38	1.38	1.38	1.38	1.38
3	94.1	1.38	1.38	1.38	1.38	1.38	1.38
4	96.1	1.38	1.38	1.38	1.38	1.38	1.38
5	98.2	1.38	1.38	1.38	1.38	1.38	1.38
6	100.2	1.38	1.38	1.38	1.38	1.38	1.38
7	102.3	1.38	1.38	1.38	1.38	1.38	1.38
8	104.3	1.38	1.38	1.38	1.38	1.38	1.38
9	106.4	1.38	1.38	1.38	1.38	1.39	1.39
10	108.4	1.38	1.38	1.38	1.38	1.39	1.39
11	110.5	1.38	1.38	1.38	1.39	1.39	1.39
12	112.5	1.38	1.38	1.38	1.39	1.39	1.39
13	114.5	1.38	1.38	1.39	1.39	1.39	1.39
14	116.6	1.38	1.38	1.39	1.39	1.39	1.39
15	118.6	1.38	1.38	1.39	1.39	1.39	1.39
16	120.7	1.38	1.38	1.39	1.39	1.40	1.40
17	122.7	1.38	1.38	1.39	1.39	1.40	1.40
18	124.8	1.38	1.38	1.39	1.40	1.40	1.40
19	126.8	1.38	1.39	1.39	1.40	1.40	1.40
20	128.9	1.38	1.39	1.39	1.40	1.41	1.41
21	130.9	1.38	1.39	1.39	1.40	1.41	1.41
22	133.0	1.38	1.39	1.40	1.40	1.41	1.41
23	135.0	1.38	1.39	1.40	1.41	1.41	1.42
24	137.0	1.38	1.39	1.40	1.41	1.42	1.42
25	139.1	1.38	1.39	1.40	1.41	1.42	1.42
26	141.1	1.38	1.39	1.40	1.42	1.43	1.43
27	143.2	1.38	1.39	1.41	1.42	1.43	1.43
28	145.2	1.38	1.39	1.41	1.42	1.44	1.44
29	147.3	1.38	1.40	1.41	1.43	1.44	1.44
30	149.3	1.38	1.40	1.42	1.43	1.45	1.45
31	151.4	1.38	1.40	1.42	1.44	1.46	1.46
32	153.4	1.38	1.40	1.42	1.44	1.46	1.47
33	155.5	1.38	1.40	1.43	1.45	1.47	1.47
34	157.5	1.38	1.41	1.43	1.46	1.48	1.48
35	159.5	1.38	1.41	1.43	1.46	1.49	1.49
36	161.6	1.38	1.41	1.43	1.46	1.50	1.50
37	163.6	1.38	1.40	1.43	1.45	1.47	1.48
38	165.7	1.38	1.40	1.42	1.43	1.45	1.46
39	167.7	1.38	1.39	1.41	1.42	1.43	1.44
40	169.8	1.38	1.39	1.40	1.41	1.42	1.43
41	171.8	1.38	1.39	1.40	1.40	1.41	1.41
42	173.9	1.38	1.38	1.39	1.39	1.40	1.40
43	175.9	1.38	1.38	1.38	1.38	1.38	1.38
44	178.0	1.38	1.38	1.38	1.38	1.38	1.38
45	180.0	1.38	1.38	1.38	1.38	1.38	1.38

PRESSURE DISTRIBUTION (MEGA - PASCAL) FOR PAD NUMBER 2

	I =	7	8	9	10	11	12
	AXIAL LENGTH METERS	0.003	0.004	0.004	0.005	0.006	0.006
J	DEG.						
1	90.0	1.38	1.38	1.38	1.38	1.38	1.38
2	92.0	1.38	1.38	1.38	1.38	1.38	1.38
3	94.1	1.38	1.38	1.38	1.38	1.38	1.38
4	96.1	1.38	1.38	1.38	1.38	1.38	1.38
5	98.2	1.38	1.38	1.38	1.38	1.38	1.38
6	100.2	1.38	1.38	1.38	1.38	1.38	1.38
7	102.3	1.38	1.38	1.38	1.38	1.38	1.38
8	104.3	1.38	1.38	1.38	1.38	1.38	1.38
9	106.4	1.39	1.39	1.39	1.39	1.39	1.39
10	108.4	1.39	1.39	1.39	1.39	1.39	1.39
11	110.5	1.39	1.39	1.39	1.39	1.39	1.39
12	112.5	1.39	1.39	1.39	1.39	1.39	1.39
13	114.5	1.39	1.39	1.39	1.39	1.39	1.39
14	116.6	1.39	1.39	1.39	1.39	1.39	1.39
15	118.6	1.39	1.40	1.40	1.40	1.40	1.40
16	120.7	1.40	1.40	1.40	1.40	1.40	1.40
17	122.7	1.40	1.40	1.40	1.40	1.40	1.40
18	124.8	1.40	1.40	1.40	1.40	1.40	1.40
19	126.8	1.40	1.40	1.40	1.40	1.40	1.40
20	128.9	1.41	1.41	1.41	1.41	1.41	1.41
21	130.9	1.41	1.41	1.41	1.41	1.41	1.41
22	133.0	1.41	1.41	1.41	1.41	1.41	1.41
23	135.0	1.42	1.42	1.42	1.42	1.42	1.42
24	137.0	1.42	1.42	1.42	1.42	1.42	1.42
25	139.1	1.42	1.42	1.42	1.43	1.43	1.43
26	141.1	1.43	1.43	1.43	1.43	1.43	1.43
27	143.2	1.43	1.43	1.43	1.44	1.44	1.44
28	145.2	1.44	1.44	1.44	1.44	1.44	1.44
29	147.3	1.45	1.45	1.45	1.45	1.45	1.45
30	149.3	1.45	1.45	1.45	1.45	1.45	1.45
31	151.4	1.46	1.46	1.46	1.46	1.46	1.46
32	153.4	1.47	1.47	1.47	1.47	1.47	1.47
33	155.5	1.48	1.48	1.48	1.48	1.48	1.48
34	157.5	1.48	1.49	1.49	1.49	1.49	1.49
35	159.5	1.50	1.50	1.50	1.50	1.50	1.50
36	161.6	1.51	1.51	1.51	1.51	1.51	1.51
37	163.6	1.49	1.49	1.49	1.50	1.50	1.50
38	165.7	1.47	1.47	1.48	1.48	1.48	1.48
39	167.7	1.45	1.46	1.46	1.46	1.47	1.47
40	169.8	1.44	1.44	1.44	1.45	1.45	1.45
41	171.8	1.42	1.42	1.43	1.43	1.43	1.43
42	173.9	1.40	1.40	1.40	1.41	1.41	1.41
43	175.9	1.38	1.38	1.38	1.38	1.38	1.38
44	178.0	1.38	1.38	1.38	1.38	1.38	1.38
45	180.0	1.38	1.38	1.38	1.38	1.38	1.38

PRESSURE DISTRIBUTION (MEGA - PASCAL) FOR PAD NUMBER 2

	I =	13	14	15	16	17	18
AXIAL LENGTH METERS		0.007	0.007	0.008	0.008	0.009	0.010
J	DEG.						
1	90.0	1.38	1.38	1.38	1.38	1.38	1.38
2	92.0	1.38	1.38	1.38	1.38	1.38	1.38
3	94.1	1.38	1.38	1.38	1.38	1.38	1.38
4	96.1	1.38	1.38	1.38	1.38	1.38	1.38
5	98.2	1.38	1.38	1.38	1.38	1.38	1.38
6	100.2	1.38	1.38	1.38	1.38	1.38	1.38
7	102.3	1.38	1.38	1.38	1.38	1.38	1.38
8	104.3	1.38	1.38	1.38	1.38	1.38	1.38
9	106.4	1.39	1.39	1.39	1.39	1.39	1.39
10	108.4	1.39	1.39	1.39	1.39	1.39	1.39
11	110.5	1.39	1.39	1.39	1.39	1.39	1.39
12	112.5	1.39	1.39	1.39	1.39	1.39	1.39
13	114.5	1.39	1.39	1.39	1.39	1.39	1.39
14	116.6	1.39	1.39	1.39	1.39	1.39	1.39
15	118.6	1.40	1.40	1.40	1.40	1.39	1.39
16	120.7	1.40	1.40	1.40	1.40	1.40	1.40
17	122.7	1.40	1.40	1.40	1.40	1.40	1.40
18	124.8	1.40	1.40	1.40	1.40	1.40	1.40
19	126.8	1.40	1.40	1.40	1.40	1.40	1.40
20	128.9	1.41	1.41	1.41	1.41	1.41	1.41
21	130.9	1.41	1.41	1.41	1.41	1.41	1.41
22	133.0	1.41	1.41	1.41	1.41	1.41	1.41
23	135.0	1.42	1.42	1.42	1.42	1.42	1.42
24	137.0	1.42	1.42	1.42	1.42	1.42	1.42
25	139.1	1.43	1.43	1.42	1.42	1.42	1.42
26	141.1	1.43	1.43	1.43	1.43	1.43	1.43
27	143.2	1.44	1.44	1.43	1.43	1.43	1.43
28	145.2	1.44	1.44	1.44	1.44	1.44	1.44
29	147.3	1.45	1.45	1.45	1.45	1.45	1.44
30	149.3	1.45	1.45	1.45	1.45	1.45	1.45
31	151.4	1.46	1.46	1.46	1.46	1.46	1.46
32	153.4	1.47	1.47	1.47	1.47	1.47	1.47
33	155.5	1.48	1.48	1.48	1.48	1.48	1.47
34	157.5	1.49	1.49	1.49	1.49	1.48	1.48
35	159.5	1.50	1.50	1.50	1.50	1.50	1.49
36	161.6	1.51	1.51	1.51	1.51	1.51	1.50
37	163.6	1.50	1.50	1.49	1.49	1.49	1.48
38	165.7	1.48	1.48	1.48	1.47	1.47	1.46
39	167.7	1.47	1.46	1.46	1.46	1.45	1.44
40	169.8	1.45	1.45	1.44	1.44	1.44	1.43
41	171.8	1.43	1.43	1.43	1.42	1.42	1.41
42	173.9	1.41	1.41	1.40	1.40	1.40	1.40
43	175.9	1.38	1.38	1.38	1.38	1.38	1.38
44	178.0	1.38	1.38	1.38	1.38	1.38	1.38
45	180.0	1.38	1.38	1.38	1.38	1.38	1.38

PRESSURE DISTRIBUTION (MEGA - PASCAL) FOR PAD NUMBER 2

	I =	19	20	21	22	23
AXIAL LENGTH METERS		0.010	0.011	0.011	0.012	0.012
J	DEG.					
1	90.0	1.38	1.38	1.38	1.38	1.38
2	92.0	1.38	1.38	1.38	1.38	1.38
3	94.1	1.38	1.38	1.38	1.38	1.38
4	96.1	1.38	1.38	1.38	1.38	1.38
5	98.2	1.38	1.38	1.38	1.38	1.38
6	100.2	1.38	1.38	1.38	1.38	1.38
7	102.3	1.38	1.38	1.38	1.38	1.38
8	104.3	1.38	1.38	1.38	1.38	1.38
9	106.4	1.39	1.38	1.38	1.38	1.38
10	108.4	1.39	1.38	1.38	1.38	1.38
11	110.5	1.39	1.39	1.38	1.38	1.38
12	112.5	1.39	1.39	1.38	1.38	1.38
13	114.5	1.39	1.39	1.39	1.38	1.38
14	116.6	1.39	1.39	1.39	1.38	1.38
15	118.6	1.39	1.39	1.39	1.38	1.38
16	120.7	1.40	1.39	1.39	1.38	1.38
17	122.7	1.40	1.39	1.39	1.38	1.38
18	124.8	1.40	1.40	1.39	1.38	1.38
19	126.8	1.40	1.40	1.39	1.39	1.38
20	128.9	1.41	1.40	1.39	1.39	1.38
21	130.9	1.41	1.40	1.39	1.39	1.38
22	133.0	1.41	1.40	1.40	1.39	1.38
23	135.0	1.41	1.41	1.40	1.39	1.38
24	137.0	1.42	1.41	1.40	1.39	1.38
25	139.1	1.42	1.41	1.40	1.39	1.38
26	141.1	1.43	1.42	1.40	1.39	1.38
27	143.2	1.43	1.42	1.41	1.39	1.38
28	145.2	1.44	1.42	1.41	1.39	1.38
29	147.3	1.44	1.43	1.41	1.40	1.38
30	149.3	1.45	1.43	1.42	1.40	1.38
31	151.4	1.46	1.44	1.42	1.40	1.38
32	153.4	1.46	1.44	1.42	1.40	1.38
33	155.5	1.47	1.45	1.43	1.40	1.38
34	157.5	1.48	1.46	1.43	1.41	1.38
35	159.5	1.49	1.46	1.43	1.41	1.38
36	161.6	1.50	1.46	1.43	1.41	1.38
37	163.6	1.47	1.45	1.43	1.40	1.38
38	165.7	1.45	1.43	1.42	1.40	1.38
39	167.7	1.43	1.42	1.41	1.39	1.38
40	169.8	1.42	1.41	1.40	1.39	1.38
41	171.8	1.41	1.40	1.40	1.39	1.38
42	173.9	1.40	1.39	1.39	1.38	1.38
43	175.9	1.38	1.38	1.38	1.38	1.38
44	178.0	1.38	1.38	1.38	1.38	1.38
45	180.0	1.38	1.38	1.38	1.38	1.38

MIN. PRESS= 1.3790 AT 180.00 DEGREES

MAX. PRESS= 1.5120 AT 161.59 DEGREES

NON-DIM CLEARANCE DISTRIBUTION(H/C) FOR PAD NUMBER 3

	I =	1	2	3	4	5	6
	AXIAL LENGTH METERS	0.000	0.001	0.001	0.002	0.002	0.003
J	DEG.						
1	180.0	1.00	1.00	1.00	1.00	1.00	1.00
2	182.0	0.982	0.982	0.982	0.982	0.982	0.982
3	184.1	0.964	0.964	0.964	0.964	2.96	2.96
4	186.1	0.947	0.947	0.947	0.947	2.95	2.95
5	188.2	0.929	0.929	0.929	0.929	2.93	2.93
6	190.2	0.911	0.911	0.911	0.911	2.91	2.91
7	192.3	0.894	0.894	0.894	0.894	2.89	2.89
8	194.3	0.876	0.876	0.876	0.876	2.88	2.88
9	196.4	0.859	0.859	0.859	0.859	2.86	2.86
10	198.4	0.842	0.842	0.842	0.842	2.84	2.84
11	200.5	0.825	0.825	0.825	0.825	2.83	2.83
12	202.5	0.809	0.809	0.809	0.809	2.81	2.81
13	204.5	0.792	0.792	0.792	0.792	2.79	2.79
14	206.6	0.776	0.776	0.776	0.776	2.78	2.78
15	208.6	0.760	0.760	0.760	0.760	2.76	2.76
16	210.7	0.745	0.745	0.745	0.745	2.74	2.74
17	212.7	0.730	0.730	0.730	0.730	2.73	2.73
18	214.8	0.715	0.715	0.715	0.715	2.71	2.71
19	216.8	0.700	0.700	0.700	0.700	2.70	2.70
20	218.9	0.686	0.686	0.686	0.686	2.69	2.69
21	220.9	0.673	0.673	0.673	0.673	2.67	2.67
22	223.0	0.659	0.659	0.659	0.659	2.66	2.66
23	225.0	0.646	0.646	0.646	0.646	2.65	2.65
24	227.0	0.634	0.634	0.634	0.634	2.63	2.63
25	229.1	0.622	0.622	0.622	0.622	2.62	2.62
26	231.1	0.611	0.611	0.611	0.611	2.61	2.61
27	233.2	0.600	0.600	0.600	0.600	2.60	2.60
28	235.2	0.589	0.589	0.589	0.589	2.59	2.59
29	237.3	0.579	0.579	0.579	0.579	2.58	2.58
30	239.3	0.570	0.570	0.570	0.570	2.57	2.57
31	241.4	0.561	0.561	0.561	0.561	2.56	2.56
32	243.4	0.553	0.553	0.553	0.553	2.55	2.55
33	245.5	0.545	0.545	0.545	0.545	2.55	2.55
34	247.5	0.538	0.538	0.538	0.538	2.54	2.54
35	249.5	0.532	0.532	0.532	0.532	2.53	2.53
36	251.6	0.526	0.526	0.526	0.526	2.53	2.53
37	253.6	0.520	0.520	0.520	0.520	0.520	0.520
38	255.7	0.516	0.516	0.516	0.516	0.516	0.516
39	257.7	0.511	0.511	0.511	0.511	0.511	0.511
40	259.8	0.508	0.508	0.508	0.508	0.508	0.508
41	261.8	0.505	0.505	0.505	0.505	0.505	0.505
42	263.9	0.503	0.503	0.503	0.503	0.503	0.503
43	265.9	0.501	0.501	0.501	0.501	0.501	0.501
44	268.0	0.500	0.500	0.500	0.500	0.500	0.500
45	270.0	0.500	0.500	0.500	0.500	0.500	0.500

NON-DIM CLEARANCE DISTRIBUTION(H/C) FOR PAD NUMBER 3

	I =	7	8	9	10	11	12
	AXIAL LENGTH METERS	0.003	0.004	0.004	0.005	0.006	0.006
J	DEG.						
1	180.0	1.00	1.00	1.00	1.00	1.00	1.00
2	182.0	0.982	0.982	0.982	0.982	0.982	0.982
3	184.1	2.96	2.96	2.96	2.96	2.96	2.96
4	186.1	2.95	2.95	2.95	2.95	2.95	2.95
5	188.2	2.93	2.93	2.93	2.93	2.93	2.93
6	190.2	2.91	2.91	2.91	2.91	2.91	2.91
7	192.3	2.89	2.89	2.89	2.89	2.89	2.89
8	194.3	2.88	2.88	2.88	2.88	2.88	2.88
9	196.4	2.86	2.86	2.86	2.86	2.86	2.86
10	198.4	2.84	2.84	2.84	2.84	2.84	2.84
11	200.5	2.83	2.83	2.83	2.83	2.83	2.83
12	202.5	2.81	2.81	2.81	2.81	2.81	2.81
13	204.5	2.79	2.79	2.79	2.79	2.79	2.79
14	206.6	2.78	2.78	2.78	2.78	2.78	2.78
15	208.6	2.76	2.76	2.76	2.76	2.76	2.76
16	210.7	2.74	2.74	2.74	2.74	2.74	2.74
17	212.7	2.73	2.73	2.73	2.73	2.73	2.73
18	214.8	2.71	2.71	2.71	2.71	2.71	2.71
19	216.8	2.70	2.70	2.70	2.70	2.70	2.70
20	218.9	2.69	2.69	2.69	2.69	2.69	2.69
21	220.9	2.67	2.67	2.67	2.67	2.67	2.67
22	223.0	2.66	2.66	2.66	2.66	2.66	2.66
23	225.0	2.65	2.65	2.65	2.65	2.65	2.65
24	227.0	2.63	2.63	2.63	2.63	2.63	2.63
25	229.1	2.62	2.62	2.62	2.62	2.62	2.62
26	231.1	2.61	2.61	2.61	2.61	2.61	2.61
27	233.2	2.60	2.60	2.60	2.60	2.60	2.60
28	235.2	2.59	2.59	2.59	2.59	2.59	2.59
29	237.3	2.58	2.58	2.58	2.58	2.58	2.58
30	239.3	2.57	2.57	2.57	2.57	2.57	2.57
31	241.4	2.56	2.56	2.56	2.56	2.56	2.56
32	243.4	2.55	2.55	2.55	2.55	2.55	2.55
33	245.5	2.55	2.55	2.55	2.55	2.55	2.55
34	247.5	2.54	2.54	2.54	2.54	2.54	2.54
35	249.5	2.53	2.53	2.53	2.53	2.53	2.53
36	251.6	2.53	2.53	2.53	2.53	2.53	2.53
37	253.6	0.520	0.520	0.520	0.520	0.520	0.520
38	255.7	0.516	0.516	0.516	0.516	0.516	0.516
39	257.7	0.511	0.511	0.511	0.511	0.511	0.511
40	259.8	0.508	0.508	0.508	0.508	0.508	0.508
41	261.8	0.505	0.505	0.505	0.505	0.505	0.505
42	263.9	0.503	0.503	0.503	0.503	0.503	0.503
43	265.9	0.501	0.501	0.501	0.501	0.501	0.501
44	268.0	0.500	0.500	0.500	0.500	0.500	0.500
45	270.0	0.500	0.500	0.500	0.500	0.500	0.500

NON-DIM CLEARANCE DISTRIBUTION(H/C) FOR PAD NUMBER 3

	I =	13	14	15	16	17	18
	AXIAL LENGTH METERS	0.007	0.007	0.008	0.008	0.009	0.010
J	DEG.						
1	180.0	1.00	1.00	1.00	1.00	1.00	1.00
2	182.0	0.982	0.982	0.982	0.982	0.982	0.982
3	184.1	2.96	2.96	2.96	2.96	2.96	2.96
4	186.1	2.95	2.95	2.95	2.95	2.95	2.95
5	188.2	2.93	2.93	2.93	2.93	2.93	2.93
6	190.2	2.91	2.91	2.91	2.91	2.91	2.91
7	192.3	2.89	2.89	2.89	2.89	2.89	2.89
8	194.3	2.88	2.88	2.88	2.88	2.88	2.88
9	196.4	2.86	2.86	2.86	2.86	2.86	2.86
10	198.4	2.84	2.84	2.84	2.84	2.84	2.84
11	200.5	2.83	2.83	2.83	2.83	2.83	2.83
12	202.5	2.81	2.81	2.81	2.81	2.81	2.81
13	204.5	2.79	2.79	2.79	2.79	2.79	2.79
14	206.6	2.78	2.78	2.78	2.78	2.78	2.78
15	208.6	2.76	2.76	2.76	2.76	2.76	2.76
16	210.7	2.74	2.74	2.74	2.74	2.74	2.74
17	212.7	2.73	2.73	2.73	2.73	2.73	2.73
18	214.8	2.71	2.71	2.71	2.71	2.71	2.71
19	216.8	2.70	2.70	2.70	2.70	2.70	2.70
20	218.9	2.69	2.69	2.69	2.69	2.69	2.69
21	220.9	2.67	2.67	2.67	2.67	2.67	2.67
22	223.0	2.66	2.66	2.66	2.66	2.66	2.66
23	225.0	2.65	2.65	2.65	2.65	2.65	2.65
24	227.0	2.63	2.63	2.63	2.63	2.63	2.63
25	229.1	2.62	2.62	2.62	2.62	2.62	2.62
26	231.1	2.61	2.61	2.61	2.61	2.61	2.61
27	233.2	2.60	2.60	2.60	2.60	2.60	2.60
28	235.2	2.59	2.59	2.59	2.59	2.59	2.59
29	237.3	2.58	2.58	2.58	2.58	2.58	2.58
30	239.3	2.57	2.57	2.57	2.57	2.57	2.57
31	241.4	2.56	2.56	2.56	2.56	2.56	2.56
32	243.4	2.55	2.55	2.55	2.55	2.55	2.55
33	245.5	2.55	2.55	2.55	2.55	2.55	2.55
34	247.5	2.54	2.54	2.54	2.54	2.54	2.54
35	249.5	2.53	2.53	2.53	2.53	2.53	2.53
36	251.6	2.53	2.53	2.53	2.53	2.53	2.53
37	253.6	0.520	0.520	0.520	0.520	0.520	0.520
38	255.7	0.516	0.516	0.516	0.516	0.516	0.516
39	257.7	0.511	0.511	0.511	0.511	0.511	0.511
40	259.8	0.508	0.508	0.508	0.508	0.508	0.508
41	261.8	0.505	0.505	0.505	0.505	0.505	0.505
42	263.9	0.503	0.503	0.503	0.503	0.503	0.503
43	265.9	0.501	0.501	0.501	0.501	0.501	0.501
44	268.0	0.500	0.500	0.500	0.500	0.500	0.500
45	270.0	0.500	0.500	0.500	0.500	0.500	0.500

NON-DIM CLEARANCE DISTRIBUTION(H/C) FOR PAD NUMBER 3

	I =	19	20	21	22	23
	AXIAL LENGTH METERS	0.010	0.011	0.011	0.012	0.012
J	DEG.					
1	180.0	1.00	1.00	1.00	1.00	1.00
2	182.0	0.982	0.982	0.982	0.982	0.982
3	184.1	2.96	0.964	0.964	0.964	0.964
4	186.1	2.95	0.947	0.947	0.947	0.947
5	188.2	2.93	0.929	0.929	0.929	0.929
6	190.2	2.91	0.911	0.911	0.911	0.911
7	192.3	2.89	0.894	0.894	0.894	0.894
8	194.3	2.88	0.876	0.876	0.876	0.876
9	196.4	2.86	0.859	0.859	0.859	0.859
10	198.4	2.84	0.842	0.842	0.842	0.842
11	200.5	2.83	0.825	0.825	0.825	0.825
12	202.5	2.81	0.809	0.809	0.809	0.809
13	204.5	2.79	0.792	0.792	0.792	0.792
14	206.6	2.78	0.776	0.776	0.776	0.776
15	208.6	2.76	0.760	0.760	0.760	0.760
16	210.7	2.74	0.745	0.745	0.745	0.745
17	212.7	2.73	0.730	0.730	0.730	0.730
18	214.8	2.71	0.715	0.715	0.715	0.715
19	216.8	2.70	0.700	0.700	0.700	0.700
20	218.9	2.69	0.686	0.686	0.686	0.686
21	220.9	2.67	0.673	0.673	0.673	0.673
22	223.0	2.66	0.659	0.659	0.659	0.659
23	225.0	2.65	0.646	0.646	0.646	0.646
24	227.0	2.63	0.634	0.634	0.634	0.634
25	229.1	2.62	0.622	0.622	0.622	0.622
26	231.1	2.61	0.611	0.611	0.611	0.611
27	233.2	2.60	0.600	0.600	0.600	0.600
28	235.2	2.59	0.589	0.589	0.589	0.589
29	237.3	2.58	0.579	0.579	0.579	0.579
30	239.3	2.57	0.570	0.570	0.570	0.570
31	241.4	2.56	0.561	0.561	0.561	0.561
32	243.4	2.55	0.553	0.553	0.553	0.553
33	245.5	2.55	0.545	0.545	0.545	0.545
34	247.5	2.54	0.538	0.538	0.538	0.538
35	249.5	2.53	0.532	0.532	0.532	0.532
36	251.6	2.53	0.526	0.526	0.526	0.526
37	253.6	0.520	0.520	0.520	0.520	0.520
38	255.7	0.516	0.516	0.516	0.516	0.516
39	257.7	0.511	0.511	0.511	0.511	0.511
40	259.8	0.508	0.508	0.508	0.508	0.508
41	261.8	0.505	0.505	0.505	0.505	0.505
42	263.9	0.503	0.503	0.503	0.503	0.503
43	265.9	0.501	0.501	0.501	0.501	0.501
44	268.0	0.500	0.500	0.500	0.500	0.500
45	270.0	0.500	0.500	0.500	0.500	0.500

MIN. CLEAR.= 0.50000 AT 270.00 DEGREES

MAX. CLEAR.= 2.9643 AT 184.09 DEGREES

PRESSURE DISTRIBUTION (MEGA - PASCAL) FOR PAD NUMBER 3

	I =	1	2	3	4	5	6
	AXIAL LENGTH METERS	0.000	0.001	0.001	0.002	0.002	0.003
J	DEG.						
1	180.0	1.38	1.38	1.38	1.38	1.38	1.38
2	182.0	1.38	1.38	1.38	1.38	1.38	1.38
3	184.1	1.38	1.38	1.38	1.38	1.38	1.38
4	186.1	1.38	1.38	1.38	1.39	1.39	1.39
5	188.2	1.38	1.38	1.39	1.39	1.40	1.40
6	190.2	1.38	1.39	1.39	1.40	1.40	1.40
7	192.3	1.38	1.39	1.40	1.41	1.41	1.41
8	194.3	1.38	1.39	1.40	1.41	1.42	1.42
9	196.4	1.38	1.39	1.41	1.42	1.43	1.43
10	198.4	1.38	1.40	1.41	1.43	1.44	1.44
11	200.5	1.38	1.40	1.42	1.43	1.45	1.45
12	202.5	1.38	1.40	1.42	1.44	1.46	1.46
13	204.5	1.38	1.40	1.43	1.45	1.47	1.47
14	206.6	1.38	1.41	1.43	1.46	1.48	1.48
15	208.6	1.38	1.41	1.44	1.47	1.49	1.49
16	210.7	1.38	1.41	1.45	1.48	1.50	1.50
17	212.7	1.38	1.42	1.45	1.48	1.52	1.52
18	214.8	1.38	1.42	1.46	1.49	1.53	1.53
19	216.8	1.38	1.42	1.47	1.50	1.54	1.54
20	218.9	1.38	1.43	1.47	1.51	1.55	1.56
21	220.9	1.38	1.43	1.48	1.53	1.57	1.57
22	223.0	1.38	1.44	1.49	1.54	1.58	1.58
23	225.0	1.38	1.44	1.50	1.55	1.60	1.60
24	227.0	1.38	1.44	1.51	1.56	1.62	1.62
25	229.1	1.38	1.45	1.51	1.58	1.63	1.63
26	231.1	1.38	1.45	1.52	1.59	1.65	1.65
27	233.2	1.38	1.46	1.53	1.60	1.67	1.67
28	235.2	1.38	1.46	1.54	1.62	1.69	1.69
29	237.3	1.38	1.47	1.55	1.63	1.71	1.71
30	239.3	1.38	1.48	1.57	1.65	1.73	1.73
31	241.4	1.38	1.48	1.58	1.67	1.75	1.75
32	243.4	1.38	1.49	1.59	1.68	1.77	1.77
33	245.5	1.38	1.49	1.60	1.70	1.80	1.80
34	247.5	1.38	1.50	1.61	1.72	1.82	1.82
35	249.5	1.38	1.51	1.62	1.73	1.84	1.84
36	251.6	1.38	1.50	1.62	1.74	1.87	1.87
37	253.6	1.38	1.49	1.59	1.68	1.75	1.79
38	255.7	1.38	1.47	1.56	1.63	1.69	1.73
39	257.7	1.38	1.46	1.53	1.59	1.64	1.68
40	259.8	1.38	1.44	1.50	1.55	1.59	1.62
41	261.8	1.38	1.42	1.47	1.50	1.54	1.56
42	263.9	1.38	1.41	1.43	1.45	1.47	1.49
43	265.9	1.38	1.38	1.38	1.38	1.38	1.38
44	268.0	1.38	1.38	1.38	1.38	1.38	1.38
45	270.0	1.38	1.38	1.38	1.38	1.38	1.38

PRESSURE DISTRIBUTION (MEGA - PASCAL) FOR PAD NUMBER 3

	I =	7	8	9	10	11	12
	AXIAL LENGTH METERS	0.003	0.004	0.004	0.005	0.006	0.006
J	DEG.						
1	180.0	1.38	1.38	1.38	1.38	1.38	1.38
2	182.0	1.38	1.38	1.38	1.38	1.38	1.38
3	184.1	1.38	1.38	1.38	1.38	1.38	1.38
4	186.1	1.39	1.39	1.39	1.39	1.39	1.39
5	188.2	1.40	1.40	1.40	1.40	1.40	1.40
6	190.2	1.40	1.40	1.40	1.40	1.40	1.40
7	192.3	1.41	1.41	1.41	1.41	1.41	1.41
8	194.3	1.42	1.42	1.42	1.42	1.42	1.42
9	196.4	1.43	1.43	1.43	1.43	1.43	1.43
10	198.4	1.44	1.44	1.44	1.44	1.44	1.44
11	200.5	1.45	1.45	1.45	1.45	1.45	1.45
12	202.5	1.46	1.46	1.46	1.46	1.46	1.46
13	204.5	1.47	1.47	1.47	1.47	1.47	1.47
14	206.6	1.48	1.48	1.48	1.48	1.48	1.48
15	208.6	1.49	1.49	1.49	1.49	1.49	1.49
16	210.7	1.50	1.50	1.50	1.51	1.51	1.51
17	212.7	1.52	1.52	1.52	1.52	1.52	1.52
18	214.8	1.53	1.53	1.53	1.53	1.53	1.53
19	216.8	1.54	1.54	1.54	1.54	1.54	1.54
20	218.9	1.56	1.56	1.56	1.56	1.56	1.56
21	220.9	1.57	1.57	1.57	1.57	1.57	1.57
22	223.0	1.59	1.59	1.59	1.59	1.59	1.59
23	225.0	1.60	1.60	1.60	1.60	1.60	1.60
24	227.0	1.62	1.62	1.62	1.62	1.62	1.62
25	229.1	1.63	1.63	1.64	1.64	1.64	1.64
26	231.1	1.65	1.65	1.65	1.65	1.65	1.65
27	233.2	1.67	1.67	1.67	1.67	1.67	1.67
28	235.2	1.69	1.69	1.69	1.69	1.69	1.69
29	237.3	1.71	1.71	1.71	1.71	1.71	1.71
30	239.3	1.73	1.73	1.73	1.73	1.73	1.73
31	241.4	1.75	1.75	1.75	1.75	1.75	1.75
32	243.4	1.77	1.77	1.78	1.78	1.78	1.78
33	245.5	1.80	1.80	1.80	1.80	1.80	1.80
34	247.5	1.82	1.82	1.82	1.82	1.82	1.82
35	249.5	1.85	1.85	1.85	1.85	1.85	1.85
36	251.6	1.87	1.87	1.87	1.88	1.88	1.88
37	253.6	1.82	1.83	1.84	1.84	1.85	1.85
38	255.7	1.76	1.78	1.80	1.80	1.81	1.81
39	257.7	1.71	1.73	1.75	1.76	1.76	1.76
40	259.8	1.65	1.67	1.69	1.70	1.70	1.70
41	261.8	1.58	1.60	1.61	1.62	1.63	1.63
42	263.9	1.50	1.51	1.52	1.52	1.53	1.53
43	265.9	1.38	1.38	1.38	1.38	1.38	1.38
44	268.0	1.38	1.38	1.38	1.38	1.38	1.38
45	270.0	1.38	1.38	1.38	1.38	1.38	1.38

PRESSURE DISTRIBUTION (MEGA - PASCAL) FOR PAD NUMBER 3

	I =	13	14	15	16	17	18
AXIAL LENGTH METERS		0.007	0.007	0.008	0.008	0.009	0.010
J	DEG.						
1	180.0	1.38	1.38	1.38	1.38	1.38	1.38
2	182.0	1.38	1.38	1.38	1.38	1.38	1.38
3	184.1	1.38	1.38	1.38	1.38	1.38	1.38
4	186.1	1.39	1.39	1.39	1.39	1.39	1.39
5	188.2	1.40	1.40	1.40	1.40	1.40	1.40
6	190.2	1.40	1.40	1.40	1.40	1.40	1.40
7	192.3	1.41	1.41	1.41	1.41	1.41	1.41
8	194.3	1.42	1.42	1.42	1.42	1.42	1.42
9	196.4	1.43	1.43	1.43	1.43	1.43	1.43
10	198.4	1.44	1.44	1.44	1.44	1.44	1.44
11	200.5	1.45	1.45	1.45	1.45	1.45	1.45
12	202.5	1.46	1.46	1.46	1.46	1.46	1.46
13	204.5	1.47	1.47	1.47	1.47	1.47	1.47
14	206.6	1.48	1.48	1.48	1.48	1.48	1.48
15	208.6	1.49	1.49	1.49	1.49	1.49	1.49
16	210.7	1.51	1.51	1.50	1.50	1.50	1.50
17	212.7	1.52	1.52	1.52	1.52	1.52	1.52
18	214.8	1.53	1.53	1.53	1.53	1.53	1.53
19	216.8	1.54	1.54	1.54	1.54	1.54	1.54
20	218.9	1.56	1.56	1.56	1.56	1.56	1.56
21	220.9	1.57	1.57	1.57	1.57	1.57	1.57
22	223.0	1.59	1.59	1.59	1.59	1.59	1.58
23	225.0	1.60	1.60	1.60	1.60	1.60	1.60
24	227.0	1.62	1.62	1.62	1.62	1.62	1.62
25	229.1	1.64	1.64	1.64	1.63	1.63	1.63
26	231.1	1.65	1.65	1.65	1.65	1.65	1.65
27	233.2	1.67	1.67	1.67	1.67	1.67	1.67
28	235.2	1.69	1.69	1.69	1.69	1.69	1.69
29	237.3	1.71	1.71	1.71	1.71	1.71	1.71
30	239.3	1.73	1.73	1.73	1.73	1.73	1.73
31	241.4	1.75	1.75	1.75	1.75	1.75	1.75
32	243.4	1.78	1.78	1.78	1.77	1.77	1.77
33	245.5	1.80	1.80	1.80	1.80	1.80	1.80
34	247.5	1.82	1.82	1.82	1.82	1.82	1.82
35	249.5	1.85	1.85	1.85	1.85	1.85	1.84
36	251.6	1.88	1.88	1.87	1.87	1.87	1.87
37	253.6	1.85	1.84	1.84	1.83	1.82	1.79
38	255.7	1.81	1.80	1.80	1.78	1.76	1.73
39	257.7	1.76	1.76	1.75	1.73	1.71	1.68
40	259.8	1.70	1.70	1.69	1.67	1.65	1.62
41	261.8	1.63	1.62	1.61	1.60	1.58	1.56
42	263.9	1.53	1.52	1.52	1.51	1.50	1.49
43	265.9	1.38	1.38	1.38	1.38	1.38	1.38
44	268.0	1.38	1.38	1.38	1.38	1.38	1.38
45	270.0	1.38	1.38	1.38	1.38	1.38	1.38

PRESSURE DISTRIBUTION (MEGA - PASCAL) FOR PAD NUMBER 3

	I =	19	20	21	22	23
AXIAL LENGTH METERS		0.010	0.011	0.011	0.012	0.012
J	DEG.					
1	180.0	1.38	1.38	1.38	1.38	1.38
2	182.0	1.38	1.38	1.38	1.38	1.38
3	184.1	1.38	1.38	1.38	1.38	1.38
4	186.1	1.39	1.39	1.38	1.38	1.38
5	188.2	1.40	1.39	1.39	1.38	1.38
6	190.2	1.40	1.40	1.39	1.39	1.38
7	192.3	1.41	1.41	1.40	1.39	1.38
8	194.3	1.42	1.41	1.40	1.39	1.38
9	196.4	1.43	1.42	1.41	1.39	1.38
10	198.4	1.44	1.43	1.41	1.40	1.38
11	200.5	1.45	1.43	1.42	1.40	1.38
12	202.5	1.46	1.44	1.42	1.40	1.38
13	204.5	1.47	1.45	1.43	1.40	1.38
14	206.6	1.48	1.46	1.43	1.41	1.38
15	208.6	1.49	1.47	1.44	1.41	1.38
16	210.7	1.50	1.48	1.45	1.41	1.38
17	212.7	1.52	1.48	1.45	1.42	1.38
18	214.8	1.53	1.49	1.46	1.42	1.38
19	216.8	1.54	1.50	1.47	1.42	1.38
20	218.9	1.55	1.51	1.47	1.43	1.38
21	220.9	1.57	1.53	1.48	1.43	1.38
22	223.0	1.58	1.54	1.49	1.44	1.38
23	225.0	1.60	1.55	1.50	1.44	1.38
24	227.0	1.62	1.56	1.51	1.44	1.38
25	229.1	1.63	1.58	1.51	1.45	1.38
26	231.1	1.65	1.59	1.52	1.45	1.38
27	233.2	1.67	1.60	1.53	1.46	1.38
28	235.2	1.69	1.62	1.54	1.46	1.38
29	237.3	1.71	1.63	1.55	1.47	1.38
30	239.3	1.73	1.65	1.57	1.48	1.38
31	241.4	1.75	1.67	1.58	1.48	1.38
32	243.4	1.77	1.68	1.59	1.49	1.38
33	245.5	1.80	1.70	1.60	1.49	1.38
34	247.5	1.82	1.72	1.61	1.50	1.38
35	249.5	1.84	1.73	1.62	1.51	1.38
36	251.6	1.87	1.74	1.62	1.50	1.38
37	253.6	1.75	1.68	1.59	1.49	1.38
38	255.7	1.69	1.63	1.56	1.47	1.38
39	257.7	1.64	1.59	1.53	1.46	1.38
40	259.8	1.59	1.55	1.50	1.44	1.38
41	261.8	1.54	1.50	1.47	1.42	1.38
42	263.9	1.47	1.45	1.43	1.41	1.38
43	265.9	1.38	1.38	1.38	1.38	1.38
44	268.0	1.38	1.38	1.38	1.38	1.38
45	270.0	1.38	1.38	1.38	1.38	1.38

MIN. PRESS= 1.3790 AT 270.00 DEGREES

MAX. PRESS= 1.8760 AT 251.59 DEGREES

NON-DIM CLEARANCE DISTRIBUTION(H/C) FOR PAD NUMBER 4

	I =	1	2	3	4	5	6
	AXIAL LENGTH METERS	0.000	0.001	0.001	0.002	0.002	0.003
J	DEG.						
1	270.0	0.500	0.500	0.500	0.500	0.500	0.500
2	272.0	0.500	0.500	0.500	0.500	0.500	0.500
3	274.1	0.501	0.501	0.501	0.501	2.50	2.50
4	276.1	0.503	0.503	0.503	0.503	2.50	2.50
5	278.2	0.505	0.505	0.505	0.505	2.51	2.51
6	280.2	0.508	0.508	0.508	0.508	2.51	2.51
7	282.3	0.511	0.511	0.511	0.511	2.51	2.51
8	284.3	0.516	0.516	0.516	0.516	2.52	2.52
9	286.4	0.520	0.520	0.520	0.520	2.52	2.52
10	288.4	0.526	0.526	0.526	0.526	2.53	2.53
11	290.5	0.532	0.532	0.532	0.532	2.53	2.53
12	292.5	0.538	0.538	0.538	0.538	2.54	2.54
13	294.5	0.545	0.545	0.545	0.545	2.55	2.55
14	296.6	0.553	0.553	0.553	0.553	2.55	2.55
15	298.6	0.561	0.561	0.561	0.561	2.56	2.56
16	300.7	0.570	0.570	0.570	0.570	2.57	2.57
17	302.7	0.579	0.579	0.579	0.579	2.58	2.58
18	304.8	0.589	0.589	0.589	0.589	2.59	2.59
19	306.8	0.600	0.600	0.600	0.600	2.60	2.60
20	308.9	0.611	0.611	0.611	0.611	2.61	2.61
21	310.9	0.622	0.622	0.622	0.622	2.62	2.62
22	313.0	0.634	0.634	0.634	0.634	2.63	2.63
23	315.0	0.646	0.646	0.646	0.646	2.65	2.65
24	317.0	0.659	0.659	0.659	0.659	2.66	2.66
25	319.1	0.673	0.673	0.673	0.673	2.67	2.67
26	321.1	0.686	0.686	0.686	0.686	2.69	2.69
27	323.2	0.700	0.700	0.700	0.700	2.70	2.70
28	325.2	0.715	0.715	0.715	0.715	2.71	2.71
29	327.3	0.730	0.730	0.730	0.730	2.73	2.73
30	329.3	0.745	0.745	0.745	0.745	2.74	2.74
31	331.4	0.760	0.760	0.760	0.760	2.76	2.76
32	333.4	0.776	0.776	0.776	0.776	2.78	2.78
33	335.5	0.792	0.792	0.792	0.792	2.79	2.79
34	337.5	0.809	0.809	0.809	0.809	2.81	2.81
35	339.5	0.825	0.825	0.825	0.825	2.83	2.83
36	341.6	0.842	0.842	0.842	0.842	2.84	2.84
37	343.6	0.859	0.859	0.859	0.859	0.859	0.859
38	345.7	0.876	0.876	0.876	0.876	0.876	0.876
39	347.7	0.894	0.894	0.894	0.894	0.894	0.894
40	349.8	0.911	0.911	0.911	0.911	0.911	0.911
41	351.8	0.929	0.929	0.929	0.929	0.929	0.929
42	353.9	0.947	0.947	0.947	0.947	0.947	0.947
43	355.9	0.964	0.964	0.964	0.964	0.964	0.964
44	358.0	0.982	0.982	0.982	0.982	0.982	0.982
45	360.0	1.00	1.00	1.00	1.00	1.00	1.00

NON-DIM CLEARANCE DISTRIBUTION(H/C) FOR PAD NUMBER 4

	I =	7	8	9	10	11	12
	AXIAL LENGTH METERS	0.003	0.004	0.004	0.005	0.006	0.006
J	DEG.						
1	270.0	0.500	0.500	0.500	0.500	0.500	0.500
2	272.0	0.500	0.500	0.500	0.500	0.500	0.500
3	274.1	2.50	2.50	2.50	2.50	2.50	2.50
4	276.1	2.50	2.50	2.50	2.50	2.50	2.50
5	278.2	2.51	2.51	2.51	2.51	2.51	2.51
6	280.2	2.51	2.51	2.51	2.51	2.51	2.51
7	282.3	2.51	2.51	2.51	2.51	2.51	2.51
8	284.3	2.52	2.52	2.52	2.52	2.52	2.52
9	286.4	2.52	2.52	2.52	2.52	2.52	2.52
10	288.4	2.53	2.53	2.53	2.53	2.53	2.53
11	290.5	2.53	2.53	2.53	2.53	2.53	2.53
12	292.5	2.54	2.54	2.54	2.54	2.54	2.54
13	294.5	2.55	2.55	2.55	2.55	2.55	2.55
14	296.6	2.55	2.55	2.55	2.55	2.55	2.55
15	298.6	2.56	2.56	2.56	2.56	2.56	2.56
16	300.7	2.57	2.57	2.57	2.57	2.57	2.57
17	302.7	2.58	2.58	2.58	2.58	2.58	2.58
18	304.8	2.59	2.59	2.59	2.59	2.59	2.59
19	306.8	2.60	2.60	2.60	2.60	2.60	2.60
20	308.9	2.61	2.61	2.61	2.61	2.61	2.61
21	310.9	2.62	2.62	2.62	2.62	2.62	2.62
22	313.0	2.63	2.63	2.63	2.63	2.63	2.63
23	315.0	2.65	2.65	2.65	2.65	2.65	2.65
24	317.0	2.66	2.66	2.66	2.66	2.66	2.66
25	319.1	2.67	2.67	2.67	2.67	2.67	2.67
26	321.1	2.69	2.69	2.69	2.69	2.69	2.69
27	323.2	2.70	2.70	2.70	2.70	2.70	2.70
28	325.2	2.71	2.71	2.71	2.71	2.71	2.71
29	327.3	2.73	2.73	2.73	2.73	2.73	2.73
30	329.3	2.74	2.74	2.74	2.74	2.74	2.74
31	331.4	2.76	2.76	2.76	2.76	2.76	2.76
32	333.4	2.78	2.78	2.78	2.78	2.78	2.78
33	335.5	2.79	2.79	2.79	2.79	2.79	2.79
34	337.5	2.81	2.81	2.81	2.81	2.81	2.81
35	339.5	2.83	2.83	2.83	2.83	2.83	2.83
36	341.6	2.84	2.84	2.84	2.84	2.84	2.84
37	343.6	0.859	0.859	0.859	0.859	0.859	0.859
38	345.7	0.876	0.876	0.876	0.876	0.876	0.876
39	347.7	0.894	0.894	0.894	0.894	0.894	0.894
40	349.8	0.911	0.911	0.911	0.911	0.911	0.911
41	351.8	0.929	0.929	0.929	0.929	0.929	0.929
42	353.9	0.947	0.947	0.947	0.947	0.947	0.947
43	355.9	0.964	0.964	0.964	0.964	0.964	0.964
44	358.0	0.982	0.982	0.982	0.982	0.982	0.982
45	360.0	1.00	1.00	1.00	1.00	1.00	1.00

NON-DIM CLEARANCE DISTRIBUTION(H/C) FOR PAD NUMBER 4

	I =	13	14	15	16	17	18
	AXIAL LENGTH METERS	0.007	0.007	0.008	0.008	0.009	0.010
J	DEG.						
1	270.0	0.500	0.500	0.500	0.500	0.500	0.500
2	272.0	0.500	0.500	0.500	0.500	0.500	0.500
3	274.1	2.50	2.50	2.50	2.50	2.50	2.50
4	276.1	2.50	2.50	2.50	2.50	2.50	2.50
5	278.2	2.51	2.51	2.51	2.51	2.51	2.51
6	280.2	2.51	2.51	2.51	2.51	2.51	2.51
7	282.3	2.51	2.51	2.51	2.51	2.51	2.51
8	284.3	2.52	2.52	2.52	2.52	2.52	2.52
9	286.4	2.52	2.52	2.52	2.52	2.52	2.52
10	288.4	2.53	2.53	2.53	2.53	2.53	2.53
11	290.5	2.53	2.53	2.53	2.53	2.53	2.53
12	292.5	2.54	2.54	2.54	2.54	2.54	2.54
13	294.5	2.55	2.55	2.55	2.55	2.55	2.55
14	296.6	2.55	2.55	2.55	2.55	2.55	2.55
15	298.6	2.56	2.56	2.56	2.56	2.56	2.56
16	300.7	2.57	2.57	2.57	2.57	2.57	2.57
17	302.7	2.58	2.58	2.58	2.58	2.58	2.58
18	304.8	2.59	2.59	2.59	2.59	2.59	2.59
19	306.8	2.60	2.60	2.60	2.60	2.60	2.60
20	308.9	2.61	2.61	2.61	2.61	2.61	2.61
21	310.9	2.62	2.62	2.62	2.62	2.62	2.62
22	313.0	2.63	2.63	2.63	2.63	2.63	2.63
23	315.0	2.65	2.65	2.65	2.65	2.65	2.65
24	317.0	2.66	2.66	2.66	2.66	2.66	2.66
25	319.1	2.67	2.67	2.67	2.67	2.67	2.67
26	321.1	2.69	2.69	2.69	2.69	2.69	2.69
27	323.2	2.70	2.70	2.70	2.70	2.70	2.70
28	325.2	2.71	2.71	2.71	2.71	2.71	2.71
29	327.3	2.73	2.73	2.73	2.73	2.73	2.73
30	329.3	2.74	2.74	2.74	2.74	2.74	2.74
31	331.4	2.76	2.76	2.76	2.76	2.76	2.76
32	333.4	2.78	2.78	2.78	2.78	2.78	2.78
33	335.5	2.79	2.79	2.79	2.79	2.79	2.79
34	337.5	2.81	2.81	2.81	2.81	2.81	2.81
35	339.5	2.83	2.83	2.83	2.83	2.83	2.83
36	341.6	2.84	2.84	2.84	2.84	2.84	2.84
37	343.6	0.859	0.859	0.859	0.859	0.859	0.859
38	345.7	0.876	0.876	0.876	0.876	0.876	0.876
39	347.7	0.894	0.894	0.894	0.894	0.894	0.894
40	349.8	0.911	0.911	0.911	0.911	0.911	0.911
41	351.8	0.929	0.929	0.929	0.929	0.929	0.929
42	353.9	0.947	0.947	0.947	0.947	0.947	0.947
43	355.9	0.964	0.964	0.964	0.964	0.964	0.964
44	358.0	0.982	0.982	0.982	0.982	0.982	0.982
45	360.0	1.00	1.00	1.00	1.00	1.00	1.00

NON-DIM CLEARANCE DISTRIBUTION(H/C) FOR PAD NUMBER 4

	I =	19	20	21	22	23
	AXIAL LENGTH METERS	0.010	0.011	0.011	0.012	0.012
J	DEG.					
1	270.0	0.500	0.500	0.500	0.500	0.500
2	272.0	0.500	0.500	0.500	0.500	0.500
3	274.1	2.50	0.501	0.501	0.501	0.501
4	276.1	2.50	0.503	0.503	0.503	0.503
5	278.2	2.51	0.505	0.505	0.505	0.505
6	280.2	2.51	0.508	0.508	0.508	0.508
7	282.3	2.51	0.511	0.511	0.511	0.511
8	284.3	2.52	0.516	0.516	0.516	0.516
9	286.4	2.52	0.520	0.520	0.520	0.520
10	288.4	2.53	0.526	0.526	0.526	0.526
11	290.5	2.53	0.532	0.532	0.532	0.532
12	292.5	2.54	0.538	0.538	0.538	0.538
13	294.5	2.55	0.545	0.545	0.545	0.545
14	296.6	2.55	0.553	0.553	0.553	0.553
15	298.6	2.56	0.561	0.561	0.561	0.561
16	300.7	2.57	0.570	0.570	0.570	0.570
17	302.7	2.58	0.579	0.579	0.579	0.579
18	304.8	2.59	0.589	0.589	0.589	0.589
19	306.8	2.60	0.600	0.600	0.600	0.600
20	308.9	2.61	0.611	0.611	0.611	0.611
21	310.9	2.62	0.622	0.622	0.622	0.622
22	313.0	2.63	0.634	0.634	0.634	0.634
23	315.0	2.65	0.646	0.646	0.646	0.646
24	317.0	2.66	0.659	0.659	0.659	0.659
25	319.1	2.67	0.673	0.673	0.673	0.673
26	321.1	2.69	0.686	0.686	0.686	0.686
27	323.2	2.70	0.700	0.700	0.700	0.700
28	325.2	2.71	0.715	0.715	0.715	0.715
29	327.3	2.73	0.730	0.730	0.730	0.730
30	329.3	2.74	0.745	0.745	0.745	0.745
31	331.4	2.76	0.760	0.760	0.760	0.760
32	333.4	2.78	0.776	0.776	0.776	0.776
33	335.5	2.79	0.792	0.792	0.792	0.792
34	337.5	2.81	0.809	0.809	0.809	0.809
35	339.5	2.83	0.825	0.825	0.825	0.825
36	341.6	2.84	0.842	0.842	0.842	0.842
37	343.6	0.859	0.859	0.859	0.859	0.859
38	345.7	0.876	0.876	0.876	0.876	0.876
39	347.7	0.894	0.894	0.894	0.894	0.894
40	349.8	0.911	0.911	0.911	0.911	0.911
41	351.8	0.929	0.929	0.929	0.929	0.929
42	353.9	0.947	0.947	0.947	0.947	0.947
43	355.9	0.964	0.964	0.964	0.964	0.964
44	358.0	0.982	0.982	0.982	0.982	0.982
45	360.0	1.00	1.00	1.00	1.00	1.00

MIN. CLEAR.= 0.50000 AT 270.00 DEGREES

MAX. CLEAR.= 2.8421 AT 341.59 DEGREES

PRESSURE DISTRIBUTION (MEGA - PASCAL) FOR PAD NUMBER 4

	I =	1	2	3	4	5	6
	AXIAL LENGTH METERS	0.000	0.001	0.001	0.002	0.002	0.003
J	DEG.						
1	270.0	1.38	1.38	1.38	1.38	1.38	1.38
2	272.0	1.38	1.38	1.38	1.38	1.38	1.38
3	274.1	1.38	1.38	1.38	1.38	1.38	1.38
4	276.1	1.38	1.38	1.38	1.38	1.38	1.38
5	278.2	1.38	1.38	1.38	1.38	1.39	1.39
6	280.2	1.38	1.38	1.38	1.38	1.39	1.39
7	282.3	1.38	1.38	1.38	1.39	1.39	1.39
8	284.3	1.38	1.38	1.38	1.39	1.40	1.40
9	286.4	1.38	1.38	1.38	1.39	1.40	1.40
10	288.4	1.38	1.38	1.39	1.39	1.40	1.40
11	290.5	1.38	1.38	1.39	1.40	1.41	1.41
12	292.5	1.38	1.38	1.39	1.40	1.41	1.41
13	294.5	1.38	1.38	1.39	1.40	1.41	1.41
14	296.6	1.38	1.39	1.39	1.41	1.42	1.42
15	298.6	1.38	1.39	1.40	1.41	1.42	1.42
16	300.7	1.38	1.39	1.40	1.41	1.43	1.43
17	302.7	1.38	1.39	1.40	1.42	1.43	1.43
18	304.8	1.38	1.39	1.40	1.42	1.44	1.44
19	306.8	1.38	1.39	1.41	1.43	1.45	1.45
20	308.9	1.38	1.39	1.41	1.43	1.45	1.45
21	310.9	1.38	1.40	1.41	1.44	1.46	1.46
22	313.0	1.38	1.40	1.42	1.44	1.47	1.47
23	315.0	1.38	1.40	1.42	1.45	1.47	1.47
24	317.0	1.38	1.40	1.43	1.45	1.48	1.48
25	319.1	1.38	1.40	1.43	1.46	1.49	1.49
26	321.1	1.38	1.41	1.43	1.46	1.50	1.50
27	323.2	1.38	1.41	1.44	1.47	1.51	1.51
28	325.2	1.38	1.41	1.44	1.48	1.52	1.52
29	327.3	1.38	1.41	1.45	1.49	1.53	1.53
30	329.3	1.38	1.42	1.46	1.49	1.54	1.54
31	331.4	1.38	1.42	1.46	1.50	1.55	1.55
32	333.4	1.38	1.42	1.47	1.51	1.56	1.56
33	335.5	1.38	1.43	1.47	1.52	1.57	1.57
34	337.5	1.38	1.43	1.48	1.53	1.58	1.59
35	339.5	1.38	1.43	1.48	1.54	1.60	1.60
36	341.6	1.38	1.43	1.48	1.54	1.61	1.61
37	343.6	1.38	1.42	1.46	1.49	1.53	1.55
38	345.7	1.38	1.41	1.43	1.46	1.48	1.50
39	347.7	1.38	1.40	1.42	1.43	1.45	1.46
40	349.8	1.38	1.39	1.40	1.41	1.43	1.44
41	351.8	1.38	1.39	1.39	1.40	1.41	1.41
42	353.9	1.38	1.38	1.38	1.39	1.39	1.39
43	355.9	1.38	1.38	1.38	1.38	1.38	1.38
44	358.0	1.38	1.38	1.38	1.38	1.38	1.38
45	360.0	1.38	1.38	1.38	1.38	1.38	1.38

PRESSURE DISTRIBUTION (MEGA - PASCAL) FOR PAD NUMBER 4

	I =	7	8	9	10	11	12
	AXIAL LENGTH METERS	0.003	0.004	0.004	0.005	0.006	0.006
J	DEG.						
1	270.0	1.38	1.38	1.38	1.38	1.38	1.38
2	272.0	1.38	1.38	1.38	1.38	1.38	1.38
3	274.1	1.38	1.38	1.38	1.38	1.38	1.38
4	276.1	1.38	1.38	1.38	1.38	1.38	1.38
5	278.2	1.39	1.39	1.39	1.39	1.39	1.39
6	280.2	1.39	1.39	1.39	1.39	1.39	1.39
7	282.3	1.39	1.39	1.39	1.39	1.39	1.39
8	284.3	1.40	1.40	1.40	1.40	1.40	1.40
9	286.4	1.40	1.40	1.40	1.40	1.40	1.40
10	288.4	1.40	1.40	1.40	1.40	1.40	1.40
11	290.5	1.41	1.41	1.41	1.41	1.41	1.41
12	292.5	1.41	1.41	1.41	1.41	1.41	1.41
13	294.5	1.42	1.42	1.42	1.42	1.42	1.42
14	296.6	1.42	1.42	1.42	1.42	1.42	1.42
15	298.6	1.42	1.42	1.42	1.42	1.42	1.42
16	300.7	1.43	1.43	1.43	1.43	1.43	1.43
17	302.7	1.43	1.44	1.44	1.44	1.44	1.44
18	304.8	1.44	1.44	1.44	1.44	1.44	1.44
19	306.8	1.45	1.45	1.45	1.45	1.45	1.45
20	308.9	1.45	1.45	1.45	1.45	1.45	1.45
21	310.9	1.46	1.46	1.46	1.46	1.46	1.46
22	313.0	1.47	1.47	1.47	1.47	1.47	1.47
23	315.0	1.47	1.47	1.47	1.47	1.47	1.47
24	317.0	1.48	1.48	1.48	1.48	1.48	1.48
25	319.1	1.49	1.49	1.49	1.49	1.49	1.49
26	321.1	1.50	1.50	1.50	1.50	1.50	1.50
27	323.2	1.51	1.51	1.51	1.51	1.51	1.51
28	325.2	1.52	1.52	1.52	1.52	1.52	1.52
29	327.3	1.53	1.53	1.53	1.53	1.53	1.53
30	329.3	1.54	1.54	1.54	1.54	1.54	1.54
31	331.4	1.55	1.55	1.55	1.55	1.55	1.55
32	333.4	1.56	1.56	1.56	1.56	1.56	1.56
33	335.5	1.57	1.57	1.58	1.58	1.58	1.58
34	337.5	1.59	1.59	1.59	1.59	1.59	1.59
35	339.5	1.60	1.60	1.60	1.60	1.61	1.61
36	341.6	1.62	1.62	1.62	1.62	1.62	1.62
37	343.6	1.56	1.57	1.57	1.57	1.58	1.58
38	345.7	1.51	1.52	1.53	1.53	1.53	1.53
39	347.7	1.47	1.48	1.49	1.49	1.49	1.49
40	349.8	1.44	1.45	1.45	1.46	1.46	1.46
41	351.8	1.42	1.42	1.43	1.43	1.43	1.43
42	353.9	1.40	1.40	1.40	1.40	1.40	1.40
43	355.9	1.38	1.38	1.38	1.38	1.38	1.38
44	358.0	1.38	1.38	1.38	1.38	1.38	1.38
45	360.0	1.38	1.38	1.38	1.38	1.38	1.38

PRESSURE DISTRIBUTION (MEGA - PASCAL) FOR PAD NUMBER 4

	I =	13	14	15	16	17	18
AXIAL LENGTH METERS		0.007	0.007	0.008	0.008	0.009	0.010
J	DEG.						
1	270.0	1.38	1.38	1.38	1.38	1.38	1.38
2	272.0	1.38	1.38	1.38	1.38	1.38	1.38
3	274.1	1.38	1.38	1.38	1.38	1.38	1.38
4	276.1	1.38	1.38	1.38	1.38	1.38	1.38
5	278.2	1.39	1.39	1.39	1.39	1.39	1.39
6	280.2	1.39	1.39	1.39	1.39	1.39	1.39
7	282.3	1.39	1.39	1.39	1.39	1.39	1.39
8	284.3	1.40	1.40	1.40	1.40	1.40	1.40
9	286.4	1.40	1.40	1.40	1.40	1.40	1.40
10	288.4	1.40	1.40	1.40	1.40	1.40	1.40
11	290.5	1.41	1.41	1.41	1.41	1.41	1.41
12	292.5	1.41	1.41	1.41	1.41	1.41	1.41
13	294.5	1.42	1.42	1.42	1.42	1.42	1.41
14	296.6	1.42	1.42	1.42	1.42	1.42	1.42
15	298.6	1.42	1.42	1.42	1.42	1.42	1.42
16	300.7	1.43	1.43	1.43	1.43	1.43	1.43
17	302.7	1.44	1.44	1.44	1.44	1.43	1.43
18	304.8	1.44	1.44	1.44	1.44	1.44	1.44
19	306.8	1.45	1.45	1.45	1.45	1.45	1.45
20	308.9	1.45	1.45	1.45	1.45	1.45	1.45
21	310.9	1.46	1.46	1.46	1.46	1.46	1.46
22	313.0	1.47	1.47	1.47	1.47	1.47	1.47
23	315.0	1.47	1.47	1.47	1.47	1.47	1.47
24	317.0	1.48	1.48	1.48	1.48	1.48	1.48
25	319.1	1.49	1.49	1.49	1.49	1.49	1.49
26	321.1	1.50	1.50	1.50	1.50	1.50	1.50
27	323.2	1.51	1.51	1.51	1.51	1.51	1.51
28	325.2	1.52	1.52	1.52	1.52	1.52	1.52
29	327.3	1.53	1.53	1.53	1.53	1.53	1.53
30	329.3	1.54	1.54	1.54	1.54	1.54	1.54
31	331.4	1.55	1.55	1.55	1.55	1.55	1.55
32	333.4	1.56	1.56	1.56	1.56	1.56	1.56
33	335.5	1.58	1.58	1.58	1.57	1.57	1.57
34	337.5	1.59	1.59	1.59	1.59	1.59	1.59
35	339.5	1.61	1.60	1.60	1.60	1.60	1.60
36	341.6	1.62	1.62	1.62	1.62	1.62	1.61
37	343.6	1.58	1.57	1.57	1.57	1.56	1.55
38	345.7	1.53	1.53	1.53	1.52	1.51	1.50
39	347.7	1.49	1.49	1.49	1.48	1.47	1.46
40	349.8	1.46	1.46	1.45	1.45	1.44	1.44
41	351.8	1.43	1.43	1.43	1.42	1.42	1.41
42	353.9	1.40	1.40	1.40	1.40	1.40	1.39
43	355.9	1.38	1.38	1.38	1.38	1.38	1.38
44	358.0	1.38	1.38	1.38	1.38	1.38	1.38
45	360.0	1.38	1.38	1.38	1.38	1.38	1.38

PRESSURE DISTRIBUTION (MEGA - PASCAL) FOR PAD NUMBER 4

	I =	19	20	21	22	23
AXIAL LENGTH METERS		0.010	0.011	0.011	0.012	0.012
J	DEG.					
1	270.0	1.38	1.38	1.38	1.38	1.38
2	272.0	1.38	1.38	1.38	1.38	1.38
3	274.1	1.38	1.38	1.38	1.38	1.38
4	276.1	1.38	1.38	1.38	1.38	1.38
5	278.2	1.39	1.38	1.38	1.38	1.38
6	280.2	1.39	1.38	1.38	1.38	1.38
7	282.3	1.39	1.39	1.38	1.38	1.38
8	284.3	1.40	1.39	1.38	1.38	1.38
9	286.4	1.40	1.39	1.38	1.38	1.38
10	288.4	1.40	1.39	1.39	1.38	1.38
11	290.5	1.41	1.40	1.39	1.38	1.38
12	292.5	1.41	1.40	1.39	1.38	1.38
13	294.5	1.41	1.40	1.39	1.38	1.38
14	296.6	1.42	1.41	1.39	1.39	1.38
15	298.6	1.42	1.41	1.40	1.39	1.38
16	300.7	1.43	1.41	1.40	1.39	1.38
17	302.7	1.43	1.42	1.40	1.39	1.38
18	304.8	1.44	1.42	1.40	1.39	1.38
19	306.8	1.45	1.43	1.41	1.39	1.38
20	308.9	1.45	1.43	1.41	1.39	1.38
21	310.9	1.46	1.44	1.41	1.40	1.38
22	313.0	1.47	1.44	1.42	1.40	1.38
23	315.0	1.47	1.45	1.42	1.40	1.38
24	317.0	1.48	1.45	1.43	1.40	1.38
25	319.1	1.49	1.46	1.43	1.40	1.38
26	321.1	1.50	1.46	1.43	1.41	1.38
27	323.2	1.51	1.47	1.44	1.41	1.38
28	325.2	1.52	1.48	1.44	1.41	1.38
29	327.3	1.53	1.49	1.45	1.41	1.38
30	329.3	1.54	1.49	1.46	1.42	1.38
31	331.4	1.55	1.50	1.46	1.42	1.38
32	333.4	1.56	1.51	1.47	1.42	1.38
33	335.5	1.57	1.52	1.47	1.43	1.38
34	337.5	1.58	1.53	1.48	1.43	1.38
35	339.5	1.60	1.54	1.48	1.43	1.38
36	341.6	1.61	1.54	1.48	1.43	1.38
37	343.6	1.53	1.49	1.46	1.42	1.38
38	345.7	1.48	1.46	1.43	1.41	1.38
39	347.7	1.45	1.43	1.42	1.40	1.38
40	349.8	1.43	1.41	1.40	1.39	1.38
41	351.8	1.41	1.40	1.39	1.39	1.38
42	353.9	1.39	1.39	1.38	1.38	1.38
43	355.9	1.38	1.38	1.38	1.38	1.38
44	358.0	1.38	1.38	1.38	1.38	1.38
45	360.0	1.38	1.38	1.38	1.38	1.38

MIN. PRESS= 1.3787 AT 276.14 DEGREES

MAX. PRESS= 1.6220 AT 341.59 DEGREES

GCYL MTI RAYLEIGH - STEP SEAL PROBLEM

```
-JOURNAL & LOAD POSITION
  ECCENTRICITY            =     0.50000
  ECCENTRICITY ANGLE      =      -90.00 DEG
  MINIMUM FILM            =   0.0000064 M
  LOAD                    =   69.73     N
  LOAD ANGLE              =       69.47 DEG

  POWER LOSS              =   116.0     W

  LEAKAGE AT I = 1        =-0.99207E-04 KG/S

  LEAKAGE AT I = M        = 0.99207E-04 KG/S

-STIFFNESS COEFFICIENTS
  PRINCIPAL  X       KXX =  0.1298E+08 N/M
  CROSS-COUPLED      KXY =  0.5795E+07 N/M
  CROSS-COUPLED      KXA =   25.55     N/RAD
  CROSS-COUPLED      KXB =   2.247     N/RAD
  CROSS-COUPLED      KYX =  0.2313E+06 N/M
  PRINCIPAL  Y       KYY =  0.1616E+08 N/M
  CROSS-COUPLED      KYA =   59.29     N/RAD
  CROSS-COUPLED      KYB =   30.28     N/RAD
  CROSS-COUPLED      KAX =  0.2214E-07 N-M/M
  CROSS-COUPLED      KAY = -0.9859E-08 N-M/M
  PRINCIPAL  A       KAA =   36.49     N-M/RAD
  CROSS-COUPLED      KAB =  0.2037     N-M/RAD
  CROSS-COUPLED      KBX =  0.1360E-07 N-M/M
  CROSS-COUPLED      KBY = -0.5505E-07 N-M/M
  CROSS-COUPLED      KBA =  -12.66     N-M/RAD
  PRINCIPAL  B       KBB =   19.24     N-M/RAD

-DAMPING COEFFICIENTS
  PRINCIPAL  X       DXX =   753.6     N-S/M
  CROSS-COUPLED      DXY =  -303.8     N-S/M
  CROSS-COUPLED      DXA = -0.1023E-02 N-S/M
  CROSS-COUPLED      DXB = -0.5204E-04 N-S/RAD
  CROSS-COUPLED      DYX =   163.4     N-S/M
  PRINCIPAL  Y       DYY =   815.2     N-S/M
  CROSS-COUPLED      DYA = -0.2082E-02 N-S/RAD
  CROSS-COUPLED      DYB = -0.1277E-02 N-S/RAD
  CROSS-COUPLED      DAX = -0.2680E-14 N-M-S/M
  CROSS-COUPLED      DAY =  0.3079E-13 N-M-S/M
  PRINCIPAL  A       DAA =  0.3602E-02 N-M-S/RAD
  CROSS-COUPLED      DAB = -0.1509E-03 N-M-S/RAD
  CROSS-COUPLED      DBX = -0.2348E-13 N-M-S/M
  CROSS-COUPLED      DBY =  0.8120E-13 N-M-S/M
  CROSS-COUPLED      DBA = -0.5116E-04 N-M-S/RAD
  PRINCIPAL  B       DBB =  0.2658E-02 N-M-S/RAD

-RIGHTING MOMENT
  ABOUT X-X           MX = -0.1978E-15 N-M
  ABOUT Y-Y           MY =  0.6593E-16 N-M
```


GCYL MTI RAYLEIGH - STEP SEAL PROBLEM

```
 ECHO OF INPUT

 NO MORE INPUT, PROGRAM TERMINATED
O MORE INPUT, PROGRAM TERMINATED
```

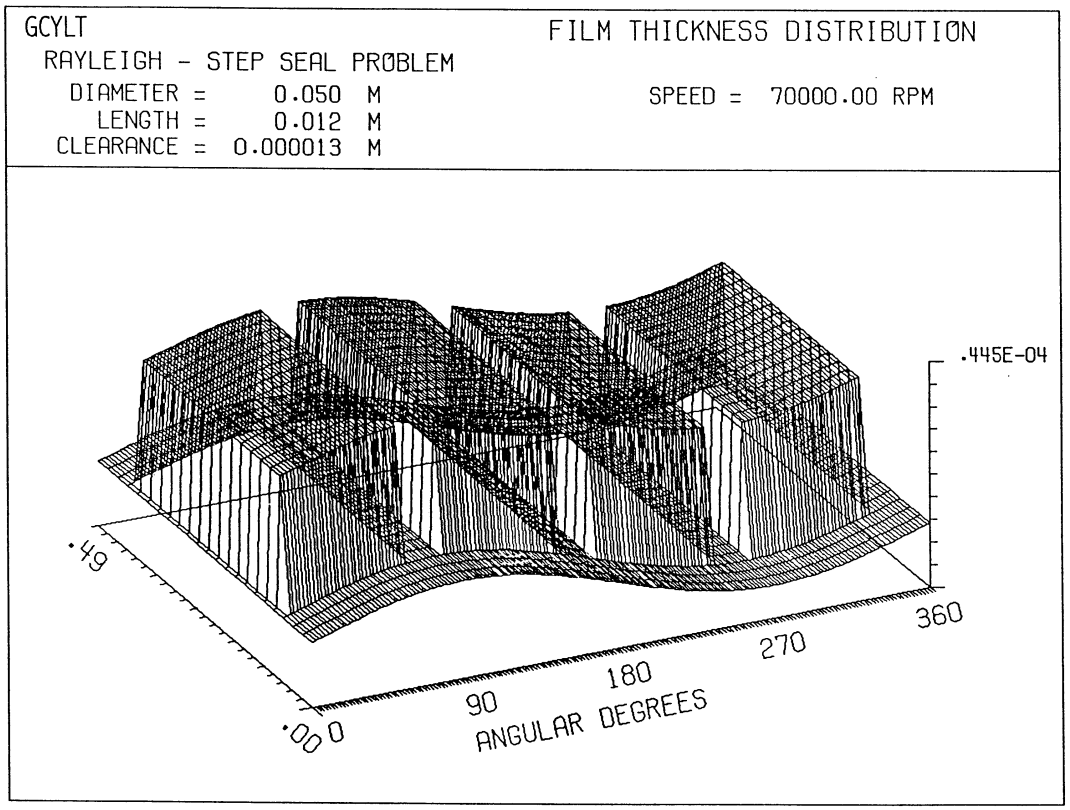

Figure 5-19. Clearance Distribution, Rayleigh-Step Seal with Eccentricity

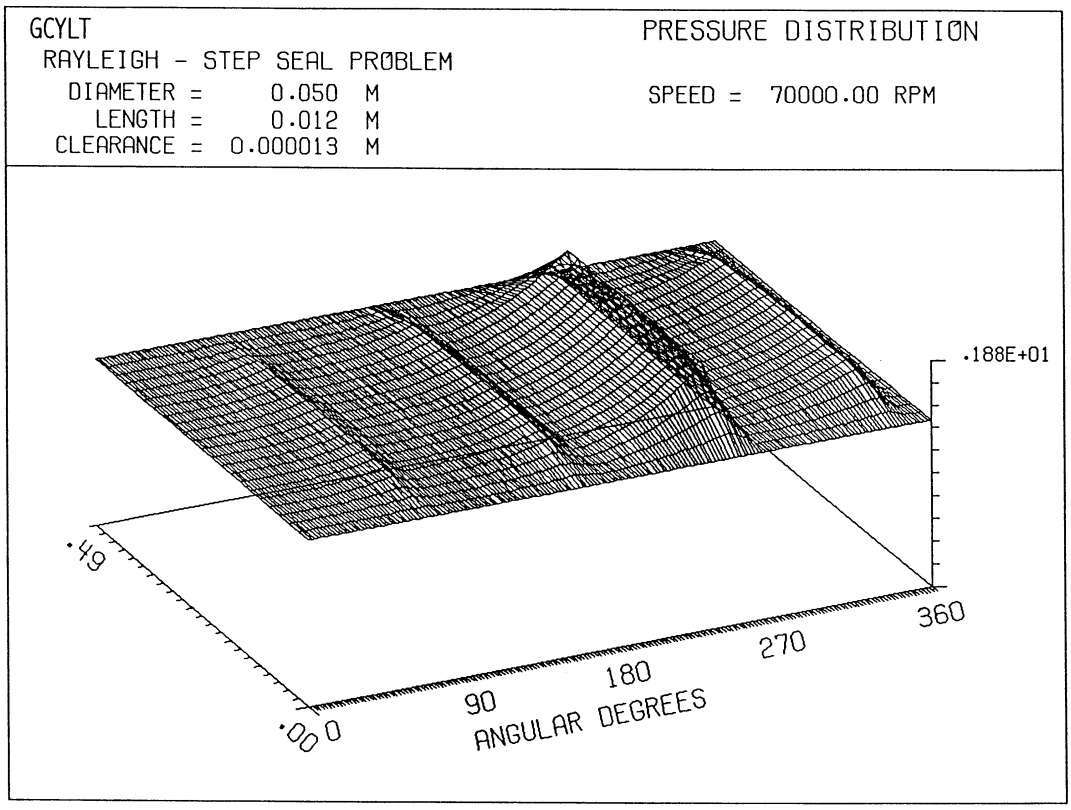

94TM10

Figure 5-20. Pressure Distribution, Rayleigh-Step Seal with Eccentricity

5.7 Critical Mass - Sample Problem

The Rayleigh-Step Seal problem (see Sections 5-5 and 5-6) were further analyzed to determine critical mass and frequency as a function of speed and operating clearance.

Figure 5-21 shows critical mass as a function of speed and operating clearance. If the mass attributable to the seal or bearing exceeds the critical mass, then an instability can occur. The usefulness of the critical mass parameter is that it provides a comparative measure of the stability characteristics of different configurations. Clearly from Figure 5-21, the low clearance seal would have superior stability characteristics. The critical frequencies are shown on Figure 5-22. For both clearances, a constant ratio exists between the critical orbital frequency and the operating speed. The ratios are slightly less than 0.5.

Critical mass problems should be confined to small, axial, pressure gradient cases, because the angular modes are not considered.

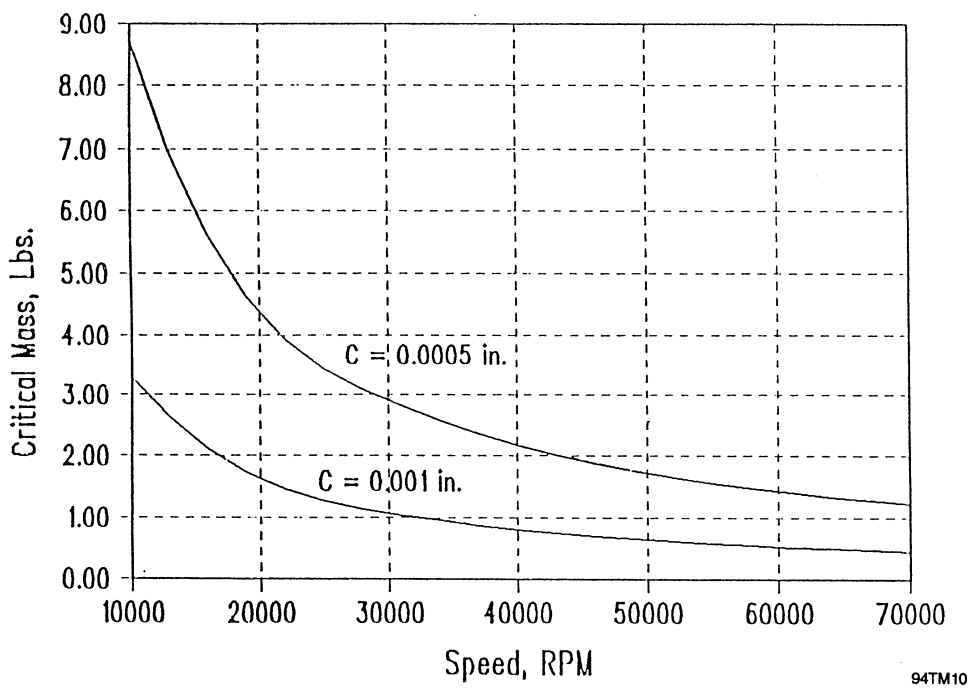

Figure 5-21. Rayleigh-Step Seal, Critical Mass versus Speed

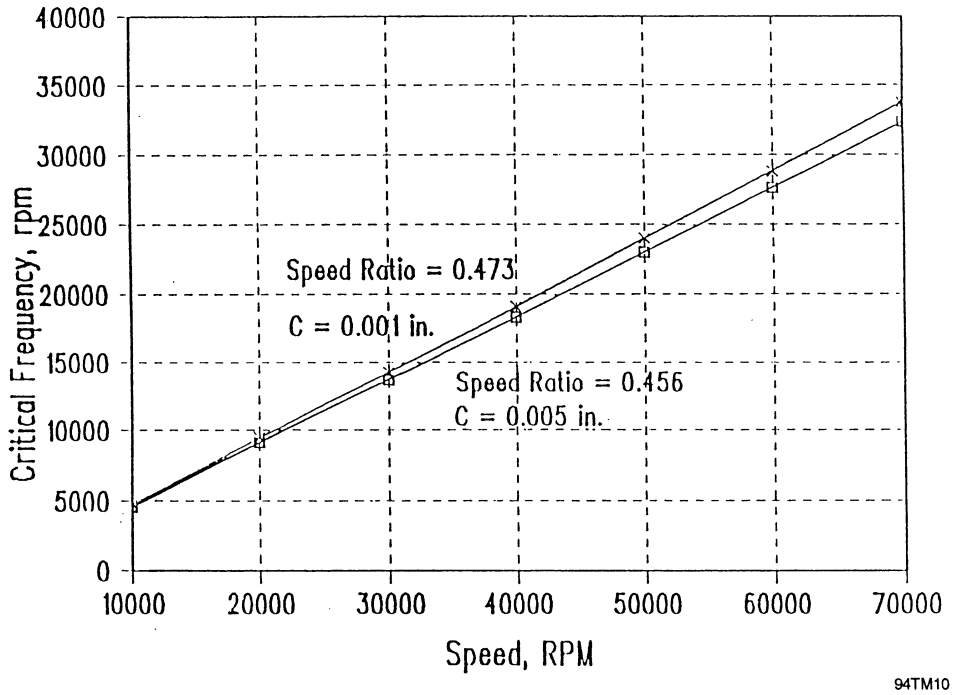

Figure 5-22. Rayleigh-Step Seal, Critical Frequency versus Speed

5.8 Comparisons of GCYLT with GCYL

Comparisons were made between the laminar code GCYL and the revised turbulent code GCYLT. The sample problems were run for each of the codes and the results are shown in Tables 5-1 through 5-6.

Table 5-1 shows the variation for the single Rayleigh-Step problem described by Sample Problem 1. The Couette Reynolds number for this case is

$$R_e = \frac{PVh}{\mu} = \frac{p_o R\omega C}{G_c T_a \mu}$$

$$= \frac{214.7 \; x \left(\frac{1.9685}{2}\right)\left(\frac{70{,}000 x 2\pi}{60}\right)(.001)}{(250{,}000)(530)(3x10^{-9})}$$

$$= 3896$$

Thus, the problem is clearly in the turbulent regime and accounts for the slight variation in performance.

Table 5-1. Rayleigh-Step Seal

	GCYLT	GCYL
ε	.40	0.4
γ, deg	-90	-90
h_{min}, in.	0.0006015	0.0006015
W, lb	131.5	27.54
α_L, deg	58.49	61.44
HP, hp	2.308	0.4555
Q_1, lb/s	-0.10191×10^{-2}	-0.44783×10^{-3}
P_{max}, lb/in.^{2}	54,325	12.209

ε = eccentricity ratio
γ = eccentricity angle
h_{min} = minimum film thickness
W = load
α_L = load angle
HP = power loss
Q_1 = leakage at I =1
P_{max} = maximum film pressure

Table 5-2 shows the comparison for the three-pad sectored seal. In this case, the Couette Reynolds number of 158 is definitely laminar. However, the externally pressurized orifices introduce high pressure gradients which cause Poiseuille turbulence to occur and cause a slight variation in results.

The three-lobe seal comparisons are shown on Table 5-3. The Couette Reynolds number is 841, which is in the transition zone and which will cause a slight variation with the laminar results.

The hydrostatic sector comparison (Sample Problem 4) is shown on Table 5-4. Since this is a zero speed case, Couette turbulence could not enter. Poiseuille turbulence, however, is present and was confirmed by a temporary flag inserted into the code. The turbulence occurs at the orifice locations, where high pressure gradients occur and cause the variation in performance outlined in the tabulation.

The last two examples (Tables 5-5, 5-6) were for Rayleigh-step seals operating under similar conditions. The Couette Reynolds number for the step region is 384 and is, thus, laminar. The variation between the laminar and turbulent cases is due to Poiseuille turbulence occurring in the step region where high pressure gradients occur.

Table 5-2. Three-Pad Sectored Seal

	GCYLT	GCYL
ε	0	0
γ, deg	0	0
h_{min}, in.	0.000250	0.000250
W, lb	--	--
α_L, deg	-54.45	-57.19
HP, hp	1.251	1.233
Q_1, lb/s	-0.14815×10^{-3}	-0.14924×10^{-3}
P_{max}, lb/in.^{2}	119.77	119.78

$$R_e = \frac{\rho v h}{\mu} = \frac{14.7}{250{,}000\ (510)} \frac{(1.125) \times (70{,}000 \times \pi/30)\ (.0005)}{3 \times 10^{-9}} = 158.4656$$

ε	=	eccentricity ratio
γ	=	eccentricity angle
h_{min}	=	minimum film thickness
W	=	load
α_L	=	load angle
HP	=	power loss
Q_1	=	leakage at I=1
P_{max}	=	maximum film pressure

Table 5-3. Three-Lobe Seal

	GCYLT	GCYL
ε	.22088	.22103
γ, deg	129.42	129.38
h_{min}, in.	0.0000037	0.0000037
W, lb	200.2	200.2
α_L, deg	-90	-90
HP, hp	186.2	186.1
Q_1, lb/s	$.12898 \times 10^{-4}$	$.12875 \times 10^{-4}$
K_{xx}, lb/in.	$.152 \times 10^{9}$	$.146 \times 10^{9}$
K_{xy}, lb/in.	$-.2103 \times 10^{8}$	$-.2379 \times 10^{8}$
K_{yx}, lb/in.	$-.3595 \times 10^{8}$	$-.3890 \times 10^{8}$
K_{yy}, lb/in.	$.8662 \times 10^{8}$	$.1002 \times 10^{9}$
D_{xx}, lb-s/in.	$.1165 \times 10^{5}$	9939
D_{xy}, lb-s/in.	$-.1510 \times 10^{5}$	$-.1089 \times 10^{5}$
D_{yx}, lb-s/in.	5204	5140
D_{yy}, lb-s/in.	$.1653 \times 10^{5}$	$.1393 \times 10^{5}$

K_{ij} = Stiffness in i direction due to j displacement
D_{ij} = Damping in i direction due to j velocity

ε = eccentricity ratio
γ = eccentricity angle
h_{min} = minimum film thickness
W = load
α_L = load angle
HP = power loss
Q_1 = leakage at I=1
P_{max} = maximum film pressure

Table 5-4. Hydrostatic Sector

	GCYLT	GCYL
ε	0.6345	0.55932
γ, deg	90	90
h_{min}, in.	0.000366	0.0004414
W, lb	370	369.6
α_L, deg	-90	-90
HP, hp	0	0
Q_1, lb-s	-0.25673×10^{-4}	-0.39586×10^{-4}
Q_M, lb-s	0.25673×10^{-4}	0.39586×10^{-4}
K_{xx}, lb/in.	.40320	43020
K_{yx}, lb/in.	-141.6	-126.9
K_{yy}, lb/in.	24290	48580
K_{ya}, lb/rad	-391.7	-298.6
K_{yb}, lb/rad	-74.14	-59.98
K_{AA}, in.-lb/rad	50550	43,890
K_{BB}, in.-lb/rad	10990	10,000
D_{xx}, lb-s/in.	15.89	10.98
D_{yx}, lb-s/in.	0.0202	0.0143
D_{yy}, lb-s/in.	128.5	81.68
D_{YA}, lb-s/rad	0.063	0.0367
D_{YB}, lb-s/rad	0.0106	0.0067
D_{AA}, in.-lb-s/rad	7.329	4.599
D_{BB}, in.-lb-s/rad	1.288	0.9138
P_1, lb/in.^{2}	178	170*
P_2, lb/in.^{2}	193	188*
P_3, lb/in.^{2}	197	194*
P_4, lb/in.^{2}	197	194*
P_5, lb/in.^{2}	193	188*
P_6, lb/in.^{2}	178	170*

*Pressures downstream of orifices

ε = eccentricity ratio
α_L = load angle
γ = eccentricity angle
HP = power loss
h_{min} = minimum film thickness
Q_1 = leakage at I=1
W = load
Q_M = leakage at I=M
P_{max} = maximum film pressure

Table 5-5. Rayleigh-Step Seal, Single Pad

	GCYLT	GCYL
ε	0	0
γ, deg	0	0
h_{min}, m	1.27×10^{-5}	1.27×10^{-5}
W, N	571.6	571
α_L, deg.	-134.73	-134.78
HP, hp	26.27	21.79
Q_1, kg/s	-0.23×10^{-4}	$-.217 \times 10^{-4}$
Q_M, kg/s	$.332 \times 10^{-3}$	$.403 \times 10^{-3}$

ε = eccentricity ratio
γ = eccentricity angle
h_{min} = minimum film thickness
W = load
α_L = load angle
HP = power loss
Q_i = leakage at I=1
P_{min} = maximum film pressure

Table 5-6. Four-Pad Rayleigh-Step Seal

	GCYLT	GCYL
ε	0.5	0.5
γ, deg	-90	-90
h_{min}, in.	6.4×10^{-6}	6.4×10^{-6}
W, N	69.73	52.96
α_L, deg	69.47	71.63
HP, hp	116	95.08
Q_1, kg/s	$-.99207 \times 10^{-4}$	$-.88483 \times 10^{-4}$
Q_M, kg/s	$.99207 \times 10^{-4}$	$.88483 \times 10^{-4}$
K_{xx}, N/in.	12,980,000	10,160,000
K_{xy}, N/in.	5,795,000	3,371,000
K_{XA}, N/rad	25.55	14.33
K_{XB}, N/rad	2.47	-.3405
K_{yx}, N/in.	23.130	-61,600
K_{yy}, N/in.	16,160	11,690
K_{YA}, N/rad	59.29	37.51
K_{YB}, N/rad	30.28	20.59
K_{AA}, N-m/rad	36.49	27.53
K_{AB}, N-m/rad	0.2307	1.657
K_{BA}, N-m/rad	-12.66	-10.32
K_{BB}, N-m/rad	19.24	14.46
D_{xx}, N-s/in.	753.6	786.4
D_{xy}, N-s/in.	-303.8	-216.6
D_{yx}, N-s/in.	163.4	192.7
D_{yy}, N-s/in	815.2	901.7

ε = eccentricity ratio
α_L = load angle
γ = eccentricity angle
HP = power loss
h_{min} = minimum film thickness
Q_1 = leakage at I=1
W = load
P_{max} = maximum film pressure

6.0 VERIFICATION

Several mechanisms were used to conduct verification of the code. Results of the code were compared against information in the public domain literature, and comparisons were made against the results of other codes and against manual computations.

Although simple in concept, extensive changes were implemented to the original laminar code to accommodate turbulence. A first check on the turbulent code was to run a laminar case to see if it compared precisely against the original code.

Most of the comparison cases involved a 360° plain seal with the parameters shown on Table 6-1.

Table 6-1. 360° Plain Seal Parameters

Diameter	=	1 in.
Length	=	2 in.
Clearance	=	0.0005 in.
Viscosity	=	3×10^{-9} lb-s/in.^{2}
Absolute Temperature	=	530°R
Specific Heat Ratio	=	1.4
Gas Constant	=	247,000 in.^{2}/S^2/°R
Eccentricity Ratio	=	0.5
Eccentricity Angle	=	270°
Ambient Pressure	=	Pa = Variable (psia)
Pressure Difference	=	Pd = Variable (psi)
Speed	=	N = Variable (rpm)
W	=	Load Capacity (lb)
γ	=	Attitude Angle (deg)
HP	=	Power Loss (HP)
K_{ij}	=	Stiffness in i direction due to j displacement
D_{ij}	=	Damping in i direction due to j velocity

Laminar comparisons were made against the original codes and against another code, SPIRALG, that was run with the smooth surface option. Results are shown on Table 6-2. The turbulent code GCYLT compared exactly against GCYL and comparisons with SPIRALG were excellent.

The original code GCYL was also compared against information in the literature. Figure 6-1 shows the pressure distribution in an infinitely long Rayleigh-Step slider at various values of the compressibility parameter Λ., For this case, closed-form solutions are available. These checks were done with the laminar version, GCYL. Turbulence would show some variation at high values of Λ.

Table 6-2. Laminar Check of GCYLT

		GCYL	GCYLT	SPIRALG
h_{min},	mils	0.000252	0.000252	.00025
W,	lb	1.695	1.695	1.672
γ	deg	7.76	7.76	7.47
HP	hp	$.214 \times 10^{-4}$	$.214 \times 10^{-4}$	$.214 \times 10^{-4}$
K_{xx}	lb/in.	921	921	869
K_{xy}	lb/in.	8572	8572	8437
$K_{x\alpha}$	lb/rad	2.163	2.163	--
$K_{x\beta}$	lb/rad	2.431	2.431	--
K_{yx}	lb/in.	-6715	-6715	-6630
K_{yy}	lb/in.	2301	2301	2166
$K_{y\alpha}$	lb/rad	1.072	1.072	--
$K_{y\beta}$	lb/rad	0.5987	0.5987	--
$K_{\alpha x}$	in.-lb/in.	--	--	--
$K_{\alpha y}$	in.-lb/in.	--	--	--
$K_{\alpha\alpha}$	in.-lb/rad	329.4	329.4	293
$K_{\alpha\beta}$	in.-lb/rad	819.3	819.3	804
$K_{\beta x}$	in.-lb/in.	--	--	--
$K_{\beta y}$	in.-lb/in.	--	--	--
$K_{\beta\alpha}$	in.-lb/rad	-1399	-1399	1369
$K_{\beta\beta}$	in.-lb/rad	97.87	97.87	86.33
D_{xx}	lb-s/in.	125.2	125.2	124
D_{xy}	lb-s/in.	-30.16	-30.16	-29
$D_{x\alpha}$	lb-s/rad	--	--	--
$D_{x\beta}$	lb-s/rad	--	--	--
D_{yx}	lb-s/in.	34.73	34.73	33.87
D_{yy}	lb-s/in.	205.1	205.1	202.9
$D_{y\alpha}$	lb-s/rad	--	--	--
$D_{y\beta}$	lb-s/rad	--	--	--
$D_{\alpha x}$	in^2-lb/s	--	--	--
$D_{\alpha y}$	in^2-lb/s	--	--	--
$D_{\alpha\alpha}$	in.-lb-s/rad	30.76	30.76	30.31
$D_{\alpha\beta}$	in.-lb-s/rad	-2.787	-2.787	-2.58
$D_{\beta x}$	in^2-lb-s	--	--	--
$D_{\beta y}$	in^2-lb-s	--	--	--
$D_{\beta\alpha}$	in.-lb-s/rad	2.698	2.698	2.48
$D_{\beta\beta}$	in.-lb-s/rad	16.99	16.99	16.75

P_a = 14.7 psia P_d = 0.0 N = 1000 rpm Excitation Frequency = 0

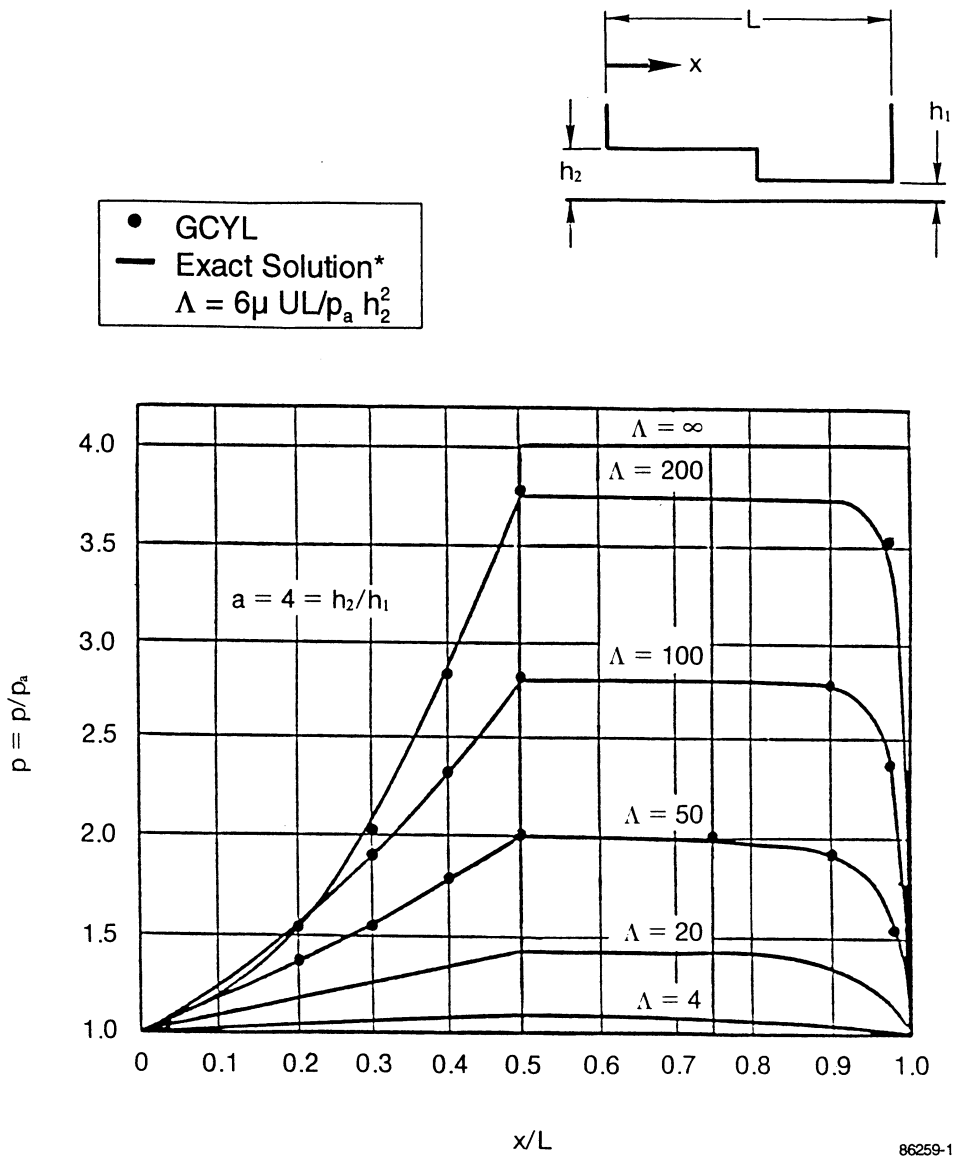

*"Theory of Hydrodynamic Lubrication", O. Pinkus, R. Sternlicht, McGraw-Hill, N.Y. 1961

Figure 6-1. Rayleigh-Step, Program Verification

Further comparisons were made for a plain cylindrical seal with an L/D ratio of 1 with information from Reference 5. Computations were made at two different eccentricity ratios, $\varepsilon = 0.6$ and 0.8. Nondimensional load capacity and attitude angles are shown in Figures 6-2 and 6-3, respectively. Excellent correlation is demonstrated. Again, these comparisons were made with the earlier laminar version of the code.

To validate Couette and Poiseuille turbulence, GCYLT was run against another code available at MTI called GBEAR. The GBEAR code accurately predicts Couette turbulence for gases, but not Poiseuille turbulence.

Table 6-3 shows comparative results for Couette turbulence with a Reynolds number of 48,995. The comparative results are very good for all parameters.

A Poiseuille turbulence check was made by running at a low speed, with a high pressure gradient and a high ambient pressure. By using a high value of ambient pressure, the compressibility parameter, Λ, is reduced to a low value. Then the liquid and gas cases nearly correspond. Comparative results are shown on Table 6-4. Again, the comparative results are very good.

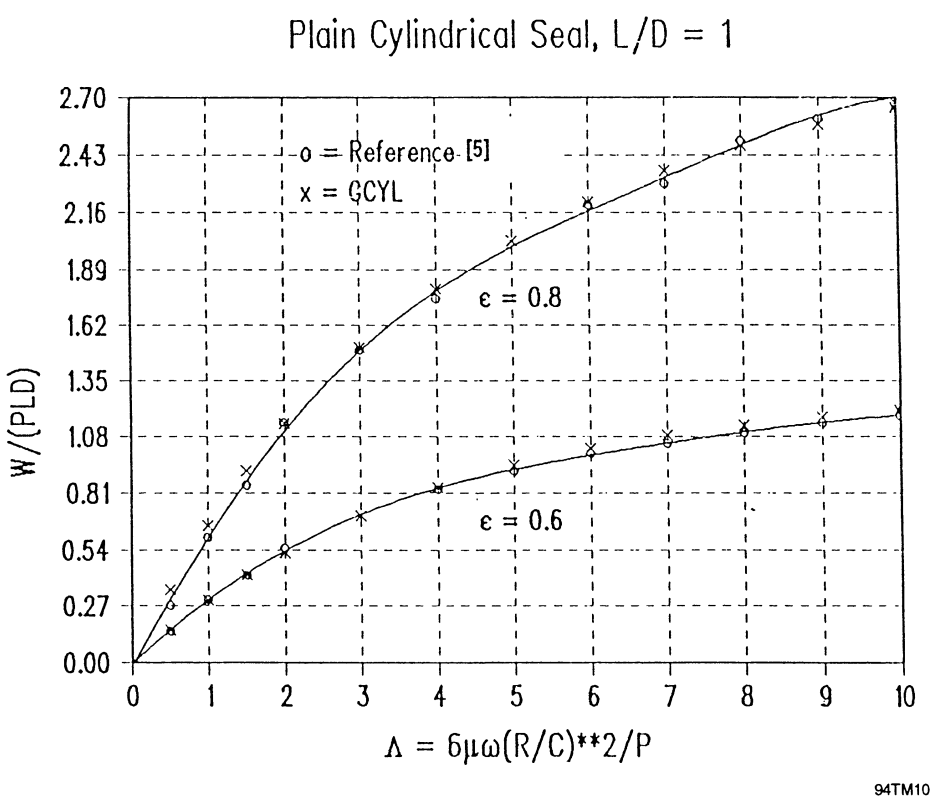

Figure 6-2. Dimensionless Load Capacity versus Λ

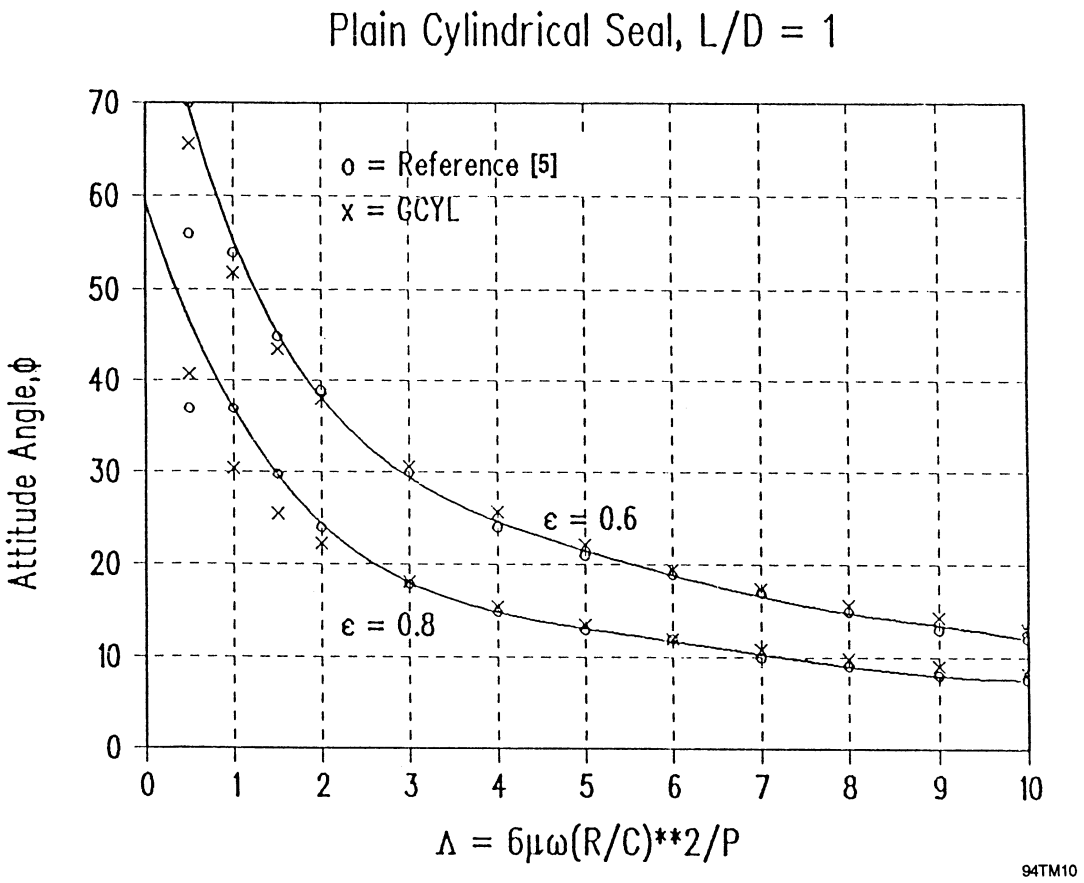

Figure 6-3. Attitude Angle versus Λ

Table 6-3. Couette Turbulence Comparison

		GCYLT	GBEAR
h_{min}	mils	0.252	0.252
W	lb	1270	1269
γ	deg	4.92	4.63
HP	hp	1.2	1.2
Q	lb/s	--	--
K_{xx}	lb/in.	43,740	40,917
K_{xy}	lb/in.	6,458,000	6,443,64
K_{yx}	lb/in.	-5,062,000	1
K_{yy}	lb/in.	919,000	-
D_{xx}	lb-s/in.	1920	5,058,81
D_{xy}	lb-s/in.	-270.7	6
D_{yx}	lb-s/in.	334.3	813,689
D_{yy}	lb-s/in.	2649	1936
M_c	lb	16	-166
ω_c	rpm	23,987	-147
			2650
			12
			24,064

N = 50,000 rpm P_a = 14,700 psig
R_{cc} = 48,995 Excitation Frequency = 0

Table 6-4. Poiseuille Turbulence Comparison

		GCYLT	GBEAR
h_{min}	mils	0.25	0.25
W	lb	9.513	9.449
γ	deg	0.03	0
HP	hp	9.48×10^{-5}	9.43×10^{-5}
Q_1	lb/s	.0270	.0267
K_{xx}	lb/in.	10.05	--
K_{xy}	lb/in.	46,170	47,271
K_{yx}	lb/in.	-38,860	-37,188
K_{yy}	lb/in.	23.16	0.78
D_{xx}	lb-s/in.	728.7	739
D_{xy}	lb-s/in.	-0.60	--
D_{yx}	lb-s/in.	0.82	0.88
D_{yy}	lb-s/in.	862.7	875
M_c	lb	-.35	-2.8
ω_c	rpm	511	497

N = 1000 rpm P_a = 14,700 psig
P_d = 500 psig Excitation Frequency = 0

An internal check of the code was made by analyzing a recessed hydrostatic bearing. With the flow path option, the net flow around the periphery of a hydrostatic pad can be determined and compared against the inflow to the recess. For flow continuity, the sum of the peripheral flows should equal the inlet flow. The following geometry and operating parameters were considered.

- A single pad with grid dimension of 15 x 37 (M x N)
- The pad diameter is 2 inches
- The pad length is 2 inches
- The pad clearance is 0.001 in.
- The pad angle is 180° and the starting angle is at 180°
- There is one recess located in the pad, and the grid corner points are as follows:
  Left bottom corner, M = 3, N = 22
  Right top corner, M = 13, N = 27
- The specific heat of the gas is 1.4
- The gas constant is 250,000 $in^2/(s^2\text{-}°R)$
- The absolute temperature is 530°R
- The absolute viscosity is 3×10^{-9} lb-s/in^2
- The inlet orifice diameter to the recess is 0.020 in. and the coefficient of discharge is 1.0. The orifice is located in the grid at M = 8, N = 24.
- The supply pressure to the orifice is 150 psig. The pressure surrounding the pad is at 0 psig. The reference ambient pressure is 14.7 psia.
- Several eccentricities and speeds were examined and are defined in the subsequent discussions.

The output from the code supplies the total flow from the peripheral flow path and the pressure in the recess. A manual computation can then be made for calculating the inlet flow through the orifice using the following equation:

$$f_o = 386.4\, A_o C_D G_1 P_s \left\{ \left(\frac{p_r}{p_s}\right)^{\frac{2}{\gamma}} \left[1 - \left(\frac{p_r}{p_s}\right)^{\frac{\gamma-1}{\gamma}} \right] \right\}^{\frac{1}{2}} \tag{6-1}$$

where

$$G_1 = \sqrt{\frac{2\gamma}{G_c \theta(\gamma - 1)}} \tag{6-2}$$

f_o = inlet flow, lb/s
C_D = discharge coefficient
p_r = recess pressure, psia
G_c = gas constant, $in^2/(s^2\text{-}°R)$
A_o = orifice area, in^2
p_s = supply pressure, psia
γ = ratio of specific heats
θ = absolute temperature, °R

Table 6-5 provides the results of several cases:

Table 6-5. Recessed Pad Flow Comparisons

ε	N rpm	Q_p lb/s	P_r psig	Q_o lb/s	Δ %
0.0	0.0	0.001188	46.6*	0.001189	0.08
0.4	0.0	0.001162	88.6	0.001163	0.09
0.0	70,000	0.001188	37.7*	0.001189	0.08

* = choked flow
N = shaft speed
P_r = recess pressure
Δ = percent variation
ε = eccentricity ratio
Q_p = peripheral flow
Q_o = orifice flow

Note that the peripheral and orifice flows differ by less than 0.2%.

When using the source points or spot recess options of the code, it is important to surround the source point with a fine grid to obtain an accurate result and a computation in which pressures will converge. Studies were made of varying grid sizes for a source problem. The variable grid option was applied and varied. A single pad with a central row of orifices were analyzed (see Sample Problem Number 4). The following information is pertinent:

- Number of pads = 1
- Pad angle = 120°
- Start angle = 30°
- Number of grid points in circumferential direction = 34
- Number of grid points in axial direction = 27
- Diameter = 2.6798 in.
- Length = 1.627 in.
- Specific heat ratio = 1.66
- Gas constant = 1,790,000 $in^2/(s^2\text{-}°R)$
- Absolute temperature = 528°R
- Viscosity = 2.9×10^{-9} lb-s/in^2
- Shaft speed = 0 rpm
- Reference pressure = 14.7 psia
- Boundary pressure = 50 psig
- Supply pressure to inherently compensated orifices = 200 psig
- Preload = 50% located at the center of the pad
- Stiffness is to be determined
- Six source points are located along a circumferential line in the axial center of the pad at circumferential grid locations 5, 10, 15, 20, 25, 30.

The hole diameter is 0.020, and the coefficient of discharge is 1.0.

Table 6-6 indicates the effect of grid width around the source point in both the axial and circumferential directions. As the grid width is changed, the source pressures remain relatively unaffected until the grid width is 6 to 8X the orifice hole size. A similar conclusion can be drawn for the other performance parameters of load, flow, stiffness and damping. The recommended grid width from the source point to a neighboring grid line is twice the orifice diameter.

Table 6-6. Comparative Studies - Discrete Orifices versus Grid Size A (Orifice Size = 0.015 in.)

Comparison of Source Pressures						
A in	P_1 psig	P_2 psig	P_3 psig	P_4 psig	P_5 psig	P_6 psig
0.015	166	187	192	192	187	174
0.030	170	185	191	191	185	170
0.060	166	184	190	190	184	166
0.120	160	182	188	189	182	160

Comparison of Performance							
A in.	W lb	Q_1 lb/s x 10^4	Q_M lb/s x 10^4	K_{xx} lb/in. x 10^{-6}	K_{yy} lb/in. x 10^{-6}	D_{xx} (lb-s)/in.	D_{yy} (lb-s)/in.
0.015	356.9	0.48753	0.48753	0.0462	0.0858	8.506	60.67
0.030	361.7	0.50539	0.50539	0.0457	0.0842	8.494	59.79
0.060	368.2	0.5305	0.5305	0.0475	0.0817	8.360	58.70
0.120	377.3	0.5651	0.5651	0.0522	0.0967	8.072	55.97

A = grid width in both circumferential and axial directions
W = load capacity
Q_1 = flow out of grid line M=1
Q_M = flow out of grid line M=M
K_{xx} and K_{yy} = stiffness in x and y directions, respectively
D_{xx} and D_{yy} = damping in x and y directions, respectively

7.0 OPERATING ENVIRONMENT

The computer code GCYLT has been written to run under a variety of operating environments. Executable versions of GCYLT have been compiled with a Watcom 32-bit FORTRAN compiler for OS/2 and tested for use on IBM PC compatible computers with 80 x 87 floating point co-processors.

GCYLT uses one feature that is supported by a wide variety of compilers but is an extension to FORTRAN 77. The extension relates to the implementation of complex double precision variables to compute frequency-dependent stiffness and damping values. This extension is part of both the IBM System Application Architecture and VAX extension to FORTRAN 77.

All source files constituting the source program have been compiled and linked as follows:

wfl386 /l=os2v2 gc1.for gc2.for gc3.for gc4.for gc5.for gc6.for gc7.for gc8.for gcopen.for gcinp0.for gcinp1.for rdline.for message.for /fe=gcylt

8.0 ERROR MESSAGES

When running the program, errors may be encountered for various reasons. Usually, some form of error message will be printed on screen. A summary of these messages follows:

! Not a Valid Keyword

An input name that is not valid.

Variable grid specified. This input is ignored

A grid or parameter specified, such as GRIDM, PADANGLE and LENGTH that are not used when variable grid is specified.

Number of pads not defined yet

Occurs if NPAD is not defined.

Error when reading variable grid

Occurs when number of variable grid values does not equal VGRIDN.

Illegal nodal point - (Source or Specified Pressure)

If source or specified pressure is specified outside of the grid, e.g., >M, >N.

!! Aborted, Negative Film Encountered

Occurs if excessive eccentricity is applied for OPTION = 1, or if negative film occurs when finding shaft position for OPTION = 2.

!! In Order to Have Nodes at the Sector Boundary, N must be =

For a sectored lobe seal, nodes must occur at the boundaries of the sectors. If not, this diagnostic will occur and input grid must be adjusted.

No Misalignment is Allowed when Symmetric Boundary Condition is Specified

Occurs if s symmetric geometry is being considered and misalignment is specified.

No Tapered Film Allowed when Symmetric Boundary Condition is Specified

An axial taper is not permitted when symmetric boundary conditions are implemented.

Load Convergence was Not Achieved Within ___ Iterations.
The Final Percentage Error was

For OPTION = 2, iterations on position are made until load convergence is achieved. If the load convergence is not achieved within the given number of iterations, the error message is printed on screen.

Calculation Did Not Converge for Compressible Flow After ___ Iterations; Number of Grid Points That Did Not Converge =

This diagnostic is printed out if the pressures in the grid do not converge after a designated number of iterations. It also provides the number of grid points that did not converge.

?? Sorry, Flow Calculation Cannot be Specified at the Boundary Where J = 0

If a flow path is specified along a circumferential boundary where J is incorrectly identified as zero, this diagnostic will appear.

?? Sorry, Flow Calculation Cannot be Specified at the Boundary Where J.GT.N

If a flow path is specified along a circumferential boundary where it exceeds the number of circumferential columns specified, this diagnostic will appear.

?? Sorry, Flow Calculation Cannot be Specified at the Boundary Where I.GT.M

If a flow path is specified along an axial boundary where it exceeds the number of axial rows specified, this diagnostic will appear.

!! Aborted, Negative Film Encountered in Stiffness Computation

Will occur if during the stiffness computation a negative clearance is encountered anywhere in the grid.

9.0 REFERENCES

1. Castelli, V. and Pirvics, J., "Review of Methods in Gas Bearing Film Analysis," *Trans. ASME, Journal of Lubrication Technology*, October 1968, pp 777-792.
2. Artiles, A., Walowit, J., and Shapiro, W., "Analysis of Hybrid, Fluid-Film Bearings with Turbulence and Inertia Effects," *ASME Publication, Advances in Computer-Aided Bearing Design*, Copyright 1982.
3. Castelli, V. and Shapiro, W., "Improved Method of Numerical Solution of the General Incompressible Fluid-Film Lubrication Problem," *Trans. ASME, Journal of Lubrication Technology*, April 1967, pp 211-218.
4. Shapiro, W. and Colsher, R., "Dynamic Characteristics of Fluid-Film Bearings," *Proceedings of 6th Turbomachinery Symposium*, Gas Turbine Laboratories, Texas A&M University, December 1977.
5. "Design of Gas Bearings," published by Mechanical Technology, Inc., 1969.

REPORT DOCUMENTATION PAGE

Form Approved
OMB No. 0704-0188

Public reporting burden for this collection of information is estimated to average 1 hour per response, including the time for reviewing instructions, searching existing data sources, gathering and maintaining the data needed, and completing and reviewing the collection of information. Send comments regarding this burden estimate or any other aspect of this collection of information, including suggestions for reducing this burden, to Washington Headquarters Services, Directorate for Information Operations and Reports, 1215 Jefferson Davis Highway, Suite 1204, Arlington, VA 22202-4302, and to the Office of Management and Budget, Paperwork Reduction Project (0704-0188), Washington, DC 20503.

1. AGENCY USE ONLY (*Leave blank*)

2. REPORT DATE
October 2005

3. REPORT TYPE AND DATES COVERED
Final Contractor Report

4. TITLE AND SUBTITLE
Users' Manual for Computer Code GCYLT
Gas Lubricated Cylindrical Seals, Laminar and Turbulent

5. FUNDING NUMBERS
WU–506–42–31–00
WU–590–21–11–00
NAS3–25644

6. AUTHOR(S)
Wilbur Shapiro

7. PERFORMING ORGANIZATION NAME(S) AND ADDRESS(ES)
Mechanical Technology, Inc.
968 Albany Shaker Road
Latham, New York 12110

8. PERFORMING ORGANIZATION REPORT NUMBER
E–13622

9. SPONSORING/MONITORING AGENCY NAME(S) AND ADDRESS(ES)
National Aeronautics and Space Administration
Washington, DC 20546–0001

10. SPONSORING/MONITORING AGENCY REPORT NUMBER
NASA CR—2003-212362
94TM10

11. SUPPLEMENTARY NOTES
Project Manager, Anita D. Liang, Aeropropulsion Projects Office, NASA Glenn Research Center, organization code P, 216–977–7439.

12a. DISTRIBUTION/AVAILABILITY STATEMENT
Restriction changed to Unclassified/Unlimited on July 27, 2005, by authority of the NASA Glenn Research Center, Structures Division.

Export Administration Regulations (EAR) Notice
~~This document contains information within the purview of the Export Administration Regulations (EAR), 15 CFR 730–774, and is export controlled. It may not be transferred to foreign nationals in the U.S. or abroad without specific approval of a knowledgeable NASA export control official, and/or unless an export license/license exception is obtained/available from the Bureau of Industry and Security, United States Department of Commerce. Violations of these regulations are punishable by fine, imprisonment, or both.~~

Unclassified-Unlimited
Subject Category: 34
Available electronically at http://gltrs.grc.nasa.gov
This publication is available from the NASA Center for AeroSpace Information, 301–621–0390.

12b. DISTRIBUTION CODE

13. ABSTRACT ***(Maximum 200 words)***
Gas Lubricated Cylindrical Turbulent (GCYLT) is a computer code used for analyzing seals that can be defined in a cylindrical coordinate reference frame. GCYLT includes Couette and Poiseuille turbulence when Reynolds numbers dictate the presence of turbulence. Program capabilities include the following: varying geometries; variable or constant grid representation; specified boundary pressures or periodic boundary conditions in the circumferential direction; axial symmetry (option); four degrees of freedom; external pressurization of inherently compensated orifices; and choice of English or SI units. The output of the program includes: clearance distribution; pressure distribution; leakage along specified flow paths; load and load angle; righting moments; viscous dissipation; cross-coupled, frequency-dependent, stiffness and damping coefficients; plotting routines for the pressure and clearance distribution; and critical mass and frequency. This user manual describes the theory, numerical methods, inputs and outputs, and presents sample problems and comparisons with other analyses for code validation.

14. SUBJECT TERMS
Seals; Cylindrical seals; Gas lubricated; Laminar; Turbulent; Leakage; Users' manual

15. NUMBER OF PAGES
191

16. PRICE CODE

17. SECURITY CLASSIFICATION OF REPORT
Unclassified

18. SECURITY CLASSIFICATION OF THIS PAGE
Unclassified

19. SECURITY CLASSIFICATION OF ABSTRACT
Unclassified

20. LIMITATION OF ABSTRACT