NASA/TP—2004-207430

Integrated Force Method Solution to Indeterminate Structural Mechanics Problems

Surya N. Patnaik
Ohio Aerospace Institute, Brook Park, Ohio

Dale A. Hopkins and Gary R. Halford
Glenn Research Center, Cleveland, Ohio

March 2004

The NASA STI Program Office . . . in Profile

Since its founding, NASA has been dedicated to the advancement of aeronautics and space science. The NASA Scientific and Technical Information (STI) Program Office plays a key part in helping NASA maintain this important role.

The NASA STI Program Office is operated by Langley Research Center, the Lead Center for NASA's scientific and technical information. The NASA STI Program Office provides access to the NASA STI Database, the largest collection of aeronautical and space science STI in the world. The Program Office is also NASA's institutional mechanism for disseminating the results of its research and development activities. These results are published by NASA in the NASA STI Report Series, which includes the following report types:

- TECHNICAL PUBLICATION. Reports of completed research or a major significant phase of research that present the results of NASA programs and include extensive data or theoretical analysis. Includes compilations of significant scientific and technical data and information deemed to be of continuing reference value. NASA's counterpart of peer-reviewed formal professional papers but has less stringent limitations on manuscript length and extent of graphic presentations.

- TECHNICAL MEMORANDUM. Scientific and technical findings that are preliminary or of specialized interest, e.g., quick release reports, working papers, and bibliographies that contain minimal annotation. Does not contain extensive analysis.

- CONTRACTOR REPORT. Scientific and technical findings by NASA-sponsored contractors and grantees.

- CONFERENCE PUBLICATION. Collected papers from scientific and technical conferences, symposia, seminars, or other meetings sponsored or cosponsored by NASA.

- SPECIAL PUBLICATION. Scientific, technical, or historical information from NASA programs, projects, and missions, often concerned with subjects having substantial public interest.

- TECHNICAL TRANSLATION. English-language translations of foreign scientific and technical material pertinent to NASA's mission.

Specialized services that complement the STI Program Office's diverse offerings include creating custom thesauri, building customized databases, organizing and publishing research results . . . even providing videos.

For more information about the NASA STI Program Office, see the following:

- Access the NASA STI Program Home Page at ***http://www.sti.nasa.gov***

- E-mail your question via the Internet to help@sti.nasa.gov

- Fax your question to the NASA Access Help Desk at 301–621–0134

- Telephone the NASA Access Help Desk at 301–621–0390

- Write to:
  NASA Access Help Desk
  NASA Center for AeroSpace Information
  7121 Standard Drive
  Hanover, MD 21076

NASA/TP—2004-207430

Integrated Force Method Solution to Indeterminate Structural Mechanics Problems

Surya N. Patnaik
Ohio Aerospace Institute, Brook Park, Ohio

Dale A. Hopkins and Gary R. Halford
Glenn Research Center, Cleveland, Ohio

National Aeronautics and
Space Administration

Glenn Research Center

March 2004

Trade names or manufacturers' names are used in this report for identification only. This usage does not constitute an official endorsement, either expressed or implied, by the National Aeronautics and Space Administration.

This work was sponsored by the Low Emissions Alternative Power Project of the Vehicle Systems Program at the NASA Glenn Research Center.

Available from

NASA Center for Aerospace Information
7121 Standard Drive
Hanover, MD 21076

National Technical Information Service
5285 Port Royal Road
Springfield, VA 22100

Available electronically at http://gltrs.grc.nasa.gov

Contents

Preface v
Chapter 1—Introduction 1
Background to Analysis Concepts 2
Integrated Force Method 2
Displacement Method 2
Redundant Force Method 4
Chapter 2—Basic Theory of Indeterminate Analysis 5
Equilibrium Equations 5
Compatibility Conditions 10
Deformation Displacement Relations 10
Initial Deformations and Support Settling 12
Null Property of the Equilibrium Equation and Compatibility Condition Matrices 13
Illustration for Compatibility Conditions 14
Force Deformation Relation 16
Strain Energy Expression for Force Deformation Relations 18
Illustrative Examples 22
Flexibility Matrix 25
Summary 25
Chapter 3—Solution of Indeterminate Problems 27
Illustrative Example 1: Thermomechanical Solution for a Fixed Column 27
Illustrative Example 2: Propped Cantilevered Beam Under a Uniform Load 34
Elementary Derivation of the Moment Curvature Relationship 38
Illustrative Example 3: Two-Span Beam Under a Uniform Load 40
Illustrative Example 4: Continuous Beam With Support Settling 44
Illustrative Example 5: Propped Beam for a Mechanical Load, a Thermal Load, and Support Settling 51
Illustrative Example 6: Fixed Beam Under a Uniform Load 60
Illustrative Example 7: Clamped Beam for a Mechanical Load, a Thermal Load, and Support Settling 64
Illustrative Example 8: Torsion of a Shaft Fixed at Both Ends 71
Illustrative Example 9: Beam Supported by a Tie Rod 75
Illustrative Example 10: Three-Bar Truss for Mechanical and Thermal Loads 79
Illustrative Example 11: Six-Bar Truss for Mechanical and Thermal Loads 83
Illustrative Example 12: A Ring Problem 88
Illustrative Example 13: Three-Span Beam Under a Distributed Load 93
Illustrative Example 14: Portal Frame 99
Illustrative Example 15: Navier's Table Problem 104
Chapter 4.—Integrated Force Method and Dual Integrated Force Method for Finite Element Analysis 109
Equations of the Integrated Force Method 110
Equations of the Dual Integrated Force Method 111
Matrices of the Integrated Force Method 111
Bandwidth of the Compatibility Conditions 118
Illustrative Example 16: Fixed Bar 120
Illustrative Example 17: Cantilevered Beam 131
Illustrative Example 18: Single-Bay Truss 142

Appendix A—Classification of Variables and Methods of Structural Mechanics 147
Appendix B—Solution Through Superposition and Redundant Techniques 149
Solution Through Superposition Method 149
Solution Through Redundant Technique 152
Appendix C—Standard Strength of Materials Formulas 157
Axial Force 157
Shear Force 157
Bending Moment 158
Torque 158
Appendix D—Sign Conventions 158
Sign Conventions for Variables 161
Sign Conventions for Equilibrium Equations 163
Appendix E—Important Symbols 165
References 167
Historical Background 167
Integrated Force Method—Basic Theory 167
Integrated Force Method—Design Optimization 167
Integrated Force Method—Elasticity 167
Integrated Force Method—Finite Element Analysis 168
Other References 168

Preface

The analysis of structures is a common core course requirement in U.S. universities (and those elsewhere) for students majoring in civil, mechanical, aeronautical, naval, architectural, and other engineering disciplines. The students are trained in structural analysis through a series of courses beginning with strength of materials and the analysis of simple indeterminate structures. In these elementary courses, the students are exposed to the fundamental structural analysis concepts in a simplified form. Comprehension of these principles becomes essential because these basic courses lay the foundation for other advanced structural analysis courses. The usefulness of this subject cannot be overemphasized because structural mechanics principles are routinely used in different engineering disciplines. We can even speculate that some of the concepts were used consciously or subconsciously for millennia by the master builders—the Romans, Egyptians, Eurasians, Chinese, Indians, and many others—of magnificent edifices, cathedrals, temples, bridges, ships, and other structural forms. The analytical formulation of the principles, however, is much younger. It is popularly traced back to the cantilever experiment (ref. 1) of Galileo (1564–1642) depicted in this figure.

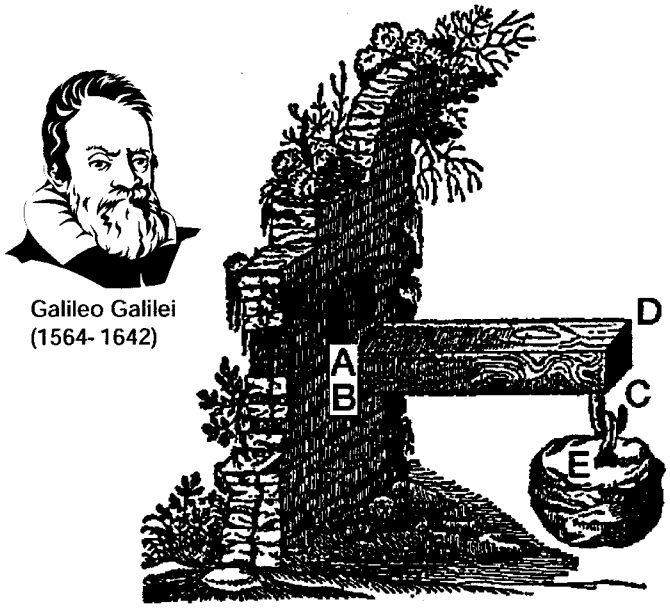

Galileo's cantilever experiment.

Even though some of his calculations were underdeveloped, Galileo's genius is well reflected in the solution of the problem, especially because Newton (1642–1727), born in the year of Galileo's death, was yet to formulate the equilibrium laws and develop the calculus that we use in the analysis of structures. Industrial revolutions, successive wars, and their machinery requirements assisted and accelerated the growth of structural mechanics because of its necessity and usefulness in such cases. Several textbooks have been written on the subject, beginning with a comprehensive treatment by Timoshenko in his *Strength of Materials* (ref. 2), first published in 1930. Therefore, the logic for yet another report on this apparently matured subject should be given.

We address this issue by considering the analysis of a symmetrical, four-legged table as an example (see Illustrative Example 15). Navier (1785–1836) attempted to determine the four reactions along the four legs of the table, but he could write only three equilibrium equations in terms of the four unknown reactions. He could not solve the (3×4) rectangular system of equilibrium equations because there were four unknowns but only three equations were available. Navier thus identified the indeterminate nature of structural mechanics problems. Their solution required additional conditions that were needed to augment the equilibrium equations. Deformation compatibility represented the additional conditions. If Navier or another researcher had completed the formulation of the compatibility conditions during the past century and a half, there would have been no need to write this report. As it turned out, the compatibility formulation that was available in the literature remained either incomplete or ad hoc in nature both for structural analysis and the theory of elasticity. We have researched and understood these conditions, which for Navier's table problem provide the additional (1×4) rectangular compatibility equation. Coupling Navier's (3×4) equilibrium equations and our (1×4) compatibility condition provides a system of four equations, which in matrix notation can be symbolized as $[S]\{R\} = \{P\}$. The four equations with a (4×4) square matrix $[S]$ can be solved for the four reactions $\{R\}$ given an external load $\{P\}$. Thus, the direct force determination method, which can complement currently available indirect methods, has now opened up. This formulation, which couples the equilibrium equations and the compatibility conditions to directly solve for the internal forces without an intermediate step of solving for a displacement or a redundant, is referred to in the literature as the Integrated Force Method (IFM) for structures.

In elasticity, Saint Venant (1797–1886) formulated the compatibility conditions in the field of an elastic continuum, but he overlooked the conditions on the boundary, which have since been formulated by Patnaik.[1] Augmentation of Saint Venant's field conditions with our boundary compatibility conditions completed the classical formulation, which in the literature is referred to as the Completed Beltrami Michell Formulation (CBMF). The IFM and CBMF are equivalent force and stress formulations, for structures and elasticity, respectively.

Structural analysis, despite its immaturity with regards to compatibility, progressed, but only through indirect methods. These are the stiffness method, which uses displacement as the primary unknown, and the redundant force method, which treats redundant forces as primary unknowns. Both are indirect formulations because the internal forces (or the reactions in the case of Navier's table problem) are not the unknowns of either method, but they are back-calculated—from displacements in the stiffness method and from redundant forces in the redundant force method.

Stiffness Method

Navier observed that the table had three displacement unknowns, these were the transverse displacement, w, and two rotations, θ_x and θ_y (see fig. 1.1); and three equilibrium equations were available to him. The three equilibrium equations, when expressed in terms of the three unknown displacements, resulted in the set of three stiffness equations. Solution of the three stiffness equations yielded the three displacements, from which reactions could be back-calculated. Generalization of this procedure, which is credited to Navier, became the popular displacement, or stiffness, method.

Redundant Force Method

In this method, one leg of the table was "cut" to obtain a three-legged auxiliary table. This three-legged auxiliary table had three reactions, which were calculated from the three equilibrium equations for the external load P. For the

[1]In three-dimensional elasticity, the boundary compatibility condition can be written in terms of stress (σ,τ) on the boundary of an isotropic, elastic continuum with direction cosines $(a_{\nu x}, a_{\nu y}, a_{\nu z})$ and Poisson's ratio (ν) as

$$\frac{\partial}{\partial z}\left\{a_{\nu z}\left(\sigma_y - \nu\sigma_z - \nu\sigma_x\right) - a_{\nu y}(1+\nu)\tau_{yz}\right\} + \frac{\partial}{\partial y}\left\{a_{\nu y}\left(\sigma_z - \nu\sigma_x - \nu\sigma_y\right) - a_{\nu z}(1+\nu)\tau_{yz}\right\} = 0$$

$$\frac{\partial}{\partial x}\left\{a_{\nu x}\left(\sigma_z - \nu\sigma_x - \nu\sigma_y\right) - a_{\nu z}(1+\nu)\tau_{zx}\right\} + \frac{\partial}{\partial z}\left\{a_{\nu z}\left(\sigma_x - \nu\sigma_y - \nu\sigma_z\right) - a_{\nu x}(1+\nu)\tau_{zx}\right\} = 0$$

$$\frac{\partial}{\partial y}\left\{a_{\nu y}\left(\sigma_x - \nu\sigma_y - \nu\sigma_z\right) - a_{\nu x}(1+\nu)\tau_{xy}\right\} + \frac{\partial}{\partial x}\left\{a_{\nu x}\left(\sigma_y - \nu\sigma_z - \nu\sigma_x\right) - a_{\nu y}(1+\nu)\tau_{xy}\right\} = 0$$

auxiliary table, the displacement Δ^P at the "cut" was back-calculated from the three known reactions. The solution process was repeated for a load R, referred to as the redundant force, in place of the reaction for the leg that was "cut," and the displacement Δ^R at the "cut" was obtained in terms of the redundant force R. Since the physical table had no real cut, the "gap" was closed ($\Delta^P + \Delta^R = 0$), which yielded the value of the redundant, or one reaction for the table problem. Thus, the table problem was reduced to an equivalent three-variable problem with two loads, consisting of a given external load P and a known reaction equal to R, which was treated as a load. This three-variable problem could be solved with the three equilibrium equations. Generalization of this procedure became the redundant force method, which was popular at the dawn of computer-automated analysis. Currently, for all practical purposes, the redundant force method has disappeared because it was cumbersome and had limited scope.

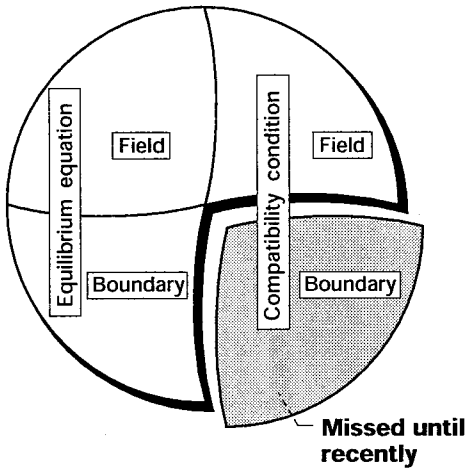

Equilibrium equations and compatibility conditions in elasticity.

The fundamental equilibrium and compatibility concepts of structural mechanics can be depicted in a pie diagram. The immaturity in the compatibility condition is represented by the shaded quarter. This portion was recently completed by Patnaik. It is true that indirect analysis methods, which included the popular displacement method, can be developed utilizing the information contained in just three quarters of the pie diagram, bypassing the shaded quarter. The direct Integrated Force Method, however, was developed utilizing all the information in the pie diagram. The direct formulation was envisioned by Michell (1863–1940), and it is described by Love (1863–1946, ref. 3) in the following quotation.

> "It is possible by taking account of these relations [the compatibility conditions] to obtain a complete system of equations which must be satisfied by stress components, and thus the way is open for a direct determination of stress without the intermediate steps of forming and solving differential equations to determine the components of displacements."

Philosophically, it is not difficult to conceive of a deficiency in a solution that could be obtained without the explicit use of certain conditions, such as the compatibility conditions for structural problems. The following quotation by Todhunter (1820–1884, ref. 4) describes one such situation.

> "Important Addition and Correction. The solution of the problems suggested in the last two Articles were given—as has already been stated—on the authority of a paper by the late Astronomer Royal, published in a report of the British Association. I now observe, however—when the printing of the articles and engraving of the Figures is already completed—that they cannot be accepted as true solutions, inasmuch as they do not satisfy the general equations (164) of § 303 [*note that the equations in question are the compatibility conditions*]. It is perhaps as well that they should be preserved as a warning to the students against the insidious and comparatively rare error of choosing a solution which satisfies completely all the boundary conditions, without satisfying the fundamental condition of strain [*note that the condition in question is the compatibility condition*], and which is therefore of course not a solution at all."

Compatibility conditions are required for the analysis of the indeterminate problems of structural mechanics. Because the compatibility conditions were not fully comprehended, indeterminate analysis was attempted without the explicit use of the compatibility condition. Now that we understand the compatibility conditions, it is natural to use these conditions to analyze indeterminate problems. The use of compatibility systematizes indeterminate analysis, especially for problems with temperature variations and the settling of supports, because the initial strains are directly accounted for through compatibility.

This report, which presents the IFM to solve indeterminate structural mechanics problems, does not duplicate any existing textbook. Because it complements indeterminate analysis, it should be read by undergraduate students in strength of materials and elementary structural analysis courses. This report should also be valuable to researchers who wish to work on the new method of forces or to complement their understanding of the compatibility condition of structural mechanics.

Industry required solutions to structural mechanics problems. This demand was fulfilled through the two indirect methods. However, completing the structural analysis formulations to develop a direct method, such as the IFM, was not the central worry of industrialists. Industry's demand for solutions (not methods), complemented by the availability of computers, promoted the rapid growth of structural analysis via the indirect displacement method. This method is very popular in industry, and for the foreseeable future, it will remain the method of choice. The displacement method, however, may have entered an era of diminishing returns because of the intensive, worldwide research of this method for the past half century. Therefore, structural analysts can afford to take time off from the displacement method to research the little-explored method of forces, which was temporarily abandoned when engineers began to use computers to automate structural analysis.

In summary, there is the single direct stress determination method, which is the Integrated Force Method. In contrast, there are several indirect methods wherein stress is back-calculated, such as the stiffness method, the redundant force method, and others, as listed in table I (also see app. A). The direct IFM should be learned because it can bring value-added benefits to the analysis, design, and testing of structures.

The IFM for advanced analysis is already available in the literature (see the IFM references, refs. 5 to 32). Through this report we would like to introduce the IFM to undergraduate engineering students. Although written especially for this young group, this report can be useful to others interested in learning the new method. For the benefit of advanced readers, an elementary treatment of the IFM concept for finite element analysis is also included.

TABLE I.—METHODS OF STRUCTURAL MECHANICS AND ASSOCIATED VARIATIONAL FUNCTIONALS

Method number	Method		Primary variables		Variational functional
	Elasticity	Structures	Elasticity	Structures	
1	Completed Beltrami-Michell Formulation (CBMF)	Integrated Force Method (IFM)	Stresses	Forces	IFM variational functional
2	Airy formulation	Redundant force method	Stress function	Redundants	Complementary energy
3	Navier Formulation (NF)	Stiffness method (DM)	Displacements	Displacements or deflections	Potential energy
4	Hybrid method (HF)	Reissner method (RM)	Stresses and displacements	Forces and deflections	Reissner functional
5	Total formulation (TF)	Washizu method (WM)	Stresses, strains, and displacements	Forces, deformations, and deflections	Washizu functional

The subject matter of the report is presented in four chapters—Introduction, Basic Theory of Indeterminate Analysis, Solution of Indeterminate Problems, and Integrated Force Method and Dual Integrated Force Method for Finite Element Analysis. Chapter 1 introduces the three analysis methods: the Integrated Force Method, the displacement method, and the redundant force method. Chapter 2 develops the analysis equations—equilibrium equations, compatibility conditions, deformation displacement relations, and force deformation relations. Chapter 3 solves a set of 15 examples, some with thermal loads and settling of supports. The integrated and dual force methods for finite element analysis are introduced and illustrated in chapter 4. The first four appendices (A to D) provide classification of variables, superposition techniques, strength of material formulas, and sign conventions. Appendix E lists the important symbols used in this report.

Summary

The theory of structures that evolved over the centuries (see the following figure) camouflaged a deficiency in the compatibility formulation. It was a deficiency that would block the growth of the primal method of force (or IFM) for analysis of indeterminate structures, causing it to split into the stiffness method and the redundant force method, as depicted in the figure on the next page. Our research on the compatibility theory has now restored the natural course of growth, leading to the Integrated Force Method for structures and the Completed Beltrami-Michell Formulation in elasticity.

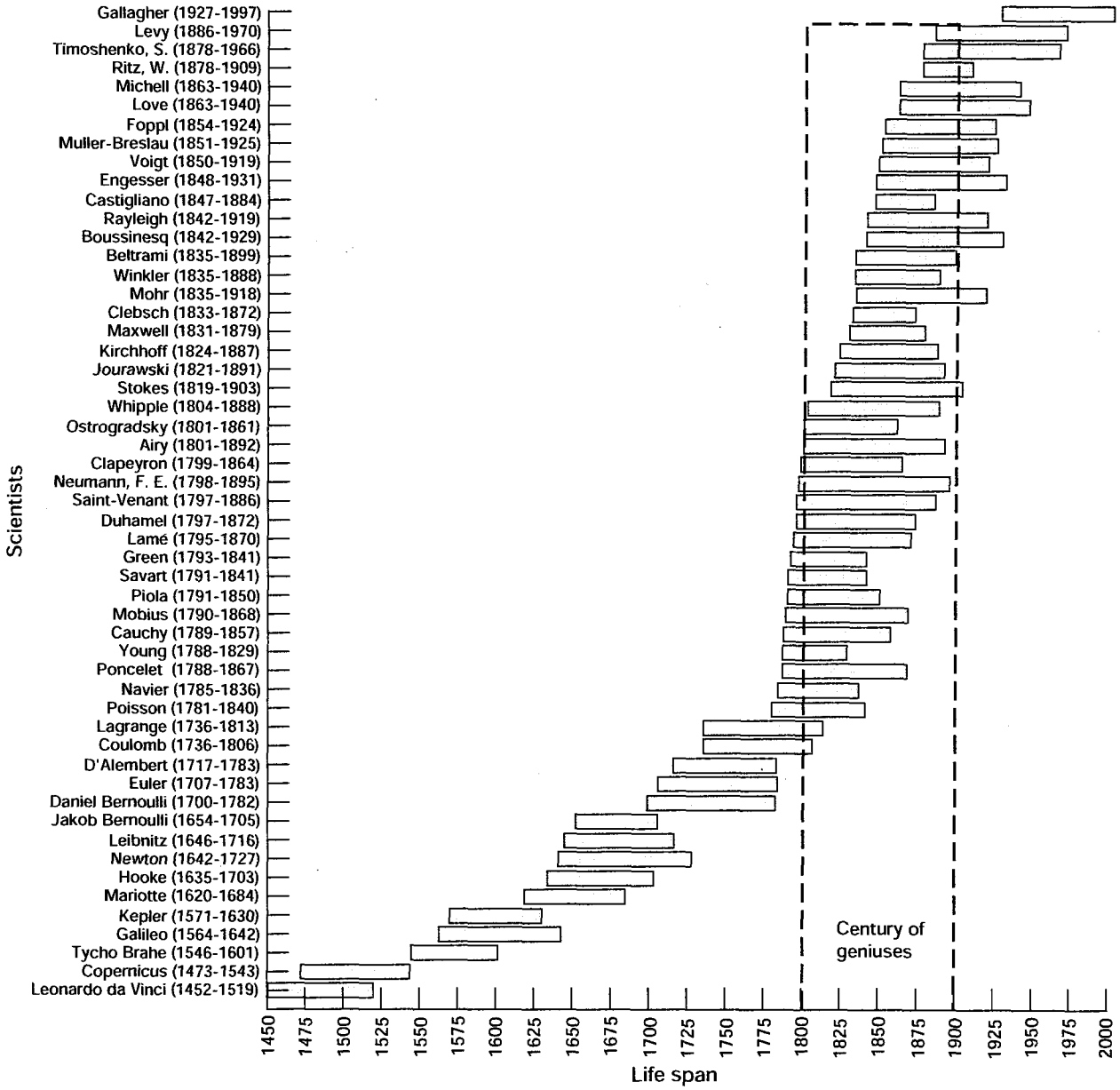

Scientists who contributed to structural science.

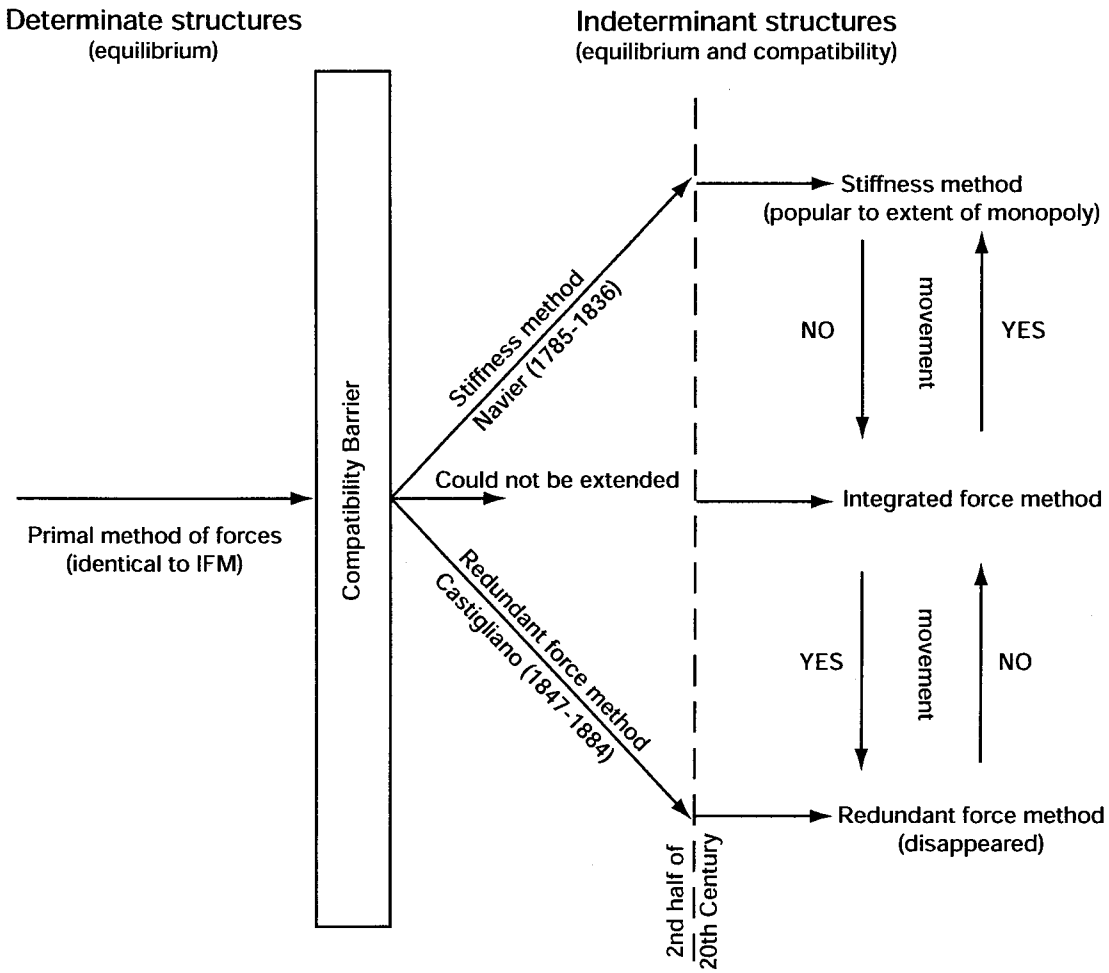

Compatibility barrier prevented extension of force method for indeterminate structures.

IFM allows free movement between variables: from stress to displacement and vice versa. It can be specialized to derive the stiffness and other methods given in table I. In addition, the IFM variational functional can be modified to obtain the functionals of the other methods. The derived methods cannot outperform the primal IFM, which has also been demonstrated numerically. Textbooks on the strength of materials, theory of structures, elasticity, and related subjects need to be revised so that they incorporate the new information on the theory of compatibility. This report, which utilizes the new information on compatibility conditions to solve indeterminate problems, is the precursor of a strength of materials textbook.

Chapter 1
Introduction

Solving indeterminate strength of materials problems via conventional methods can be cumbersome and difficult in comparison to analyzing determinate structures. Conventional analysis methods include redundant analysis, wherein members are "cut" and the "gaps" are subsequently closed; superposition techniques; and solutions through the application of energy theorems. Some of these concepts are illustrated in appendix B. Even though such procedures can solve simple indeterminate problems, their generalization is not straightforward, especially for complex structures. Furthermore, such procedures, though applicable for linear analysis, cannot be easily extended for nonlinear or dynamic analysis. After comprehending the conventional methods, readers will rightfully realize that these redundant-based ad hoc techniques can be problem dependent. Their generalization, when possible, can be cumbersome at best.

Analyses of indeterminate problems, in addition to the equilibrium equations (EE), require the compatibility conditions (CC). The natural equilibrium concept common to the analysis of both determinate and indeterminate problems is straightforward; and its development, understanding, and use for analyzing structural mechanics problems is complete. However, until recently, the same could not have been said about the compatibility conditions. These CC, which are unique to the analysis of indeterminate structures, have been neither adequately researched nor utilized in analyses. The immature state of development of the CC can be considered to be the primary impediment to the conventional analysis of indeterminate structures. We have researched and now understand these illusive compatibility conditions. Our understanding of the CC has systematized the analysis of indeterminate structures. Conceptually, such an analysis can be represented by the following equation:

$$\begin{bmatrix} \text{Equilibrium equation} \\ \hline \text{Compatibility condition} \end{bmatrix} \{\text{Force}\} = \begin{Bmatrix} \text{Mechanical load} \\ \hline \text{Initial deformation} \end{Bmatrix} \tag{1.1}$$

A balance of the internal force and external mechanical load is achieved through the equilibrium equation, which forms the upper part of equation (1.1). The compliance of force and initial deformation is achieved through the compatibility condition, representing the lower portion of equation (1.1). This equation, which bestows appropriate emphasis on equilibrium and compatibility, provides both necessary and sufficient conditions for determining force in an indeterminate structure. The displacement, if required, can be easily back-calculated from the force.

In advanced finite element structural analysis, the new force method that has been developed is based essentially on equation (1.1), which couples the EE and CC. In the literature, this method is referred to as the Integrated Force Method (IFM). Research publications on IFM are listed in the IFM references under the headings Integrated Force Method—Basic Theory (refs. 5 to 10), Integrated Force Method—Design Optimization (refs. 11 to 18), Integrated Force Method—Elasticity (refs. 19 to 22), and Integrated Force Method—Finite Element Analysis (refs. 23 to 32). Analysis of indeterminate problems, the subject matter of this report, though simpler, also requires the same EE and CC concepts. To maintain consistency, we refer to this procedure, which utilizes EE and CC simultaneously to solve structural mechanics examples, as the IFM solution to indeterminate problems. The equilibrium equations can be transmuted to generate the popular displacement method of structural analysis. Likewise, the redundant force method can be developed through a cumbersome transformation of a set of selected continuity conditions (members are "cut" and the "gaps" are closed) that bears some semblance to the CC representing the lower portion of equation (1.1). In other words, the IFM bestows simultaneous emphasis on the EE and CC, whereas the displacement method and redundant method emphasize the equilibrium and the compatibility, respectively. Since the IFM utilizes both EE and CC, this method can be developed systematically and can produce reliable solutions even for difficult structural analysis problems.

Background to Analysis Concepts

Some of the fundamental structural analysis concepts are illustrated through the example of a table problem. A four-legged table subjected to a load P with eccentricities e_x and e_y is shown in figure 1.1(a). The problem is to determine the four reactions (R_1, R_2, R_3, R_4) along the legs of the table. It is assumed that this symmetrical table, which is made of wood, is resting on a level floor made of a rigid material, such as stone. The distances between the legs along the x- and y-directions are $2a$ and $2b$, respectively. The cross-sectional area and the modulus of elasticity of the legs are A and E, respectively. The problem is referred to as "Navier's Table Problem" because Navier (1785–1836) was the first to attempt its solution. The problem is solved as Illustrative Example 15 in this report. Here, the basic analysis concepts are examined through the table problem.

Three equilibrium equations can be written for the problem. These are obtained through the summation of the forces along the z-direction, $\Sigma_z V = 0$, and the summation of the moments about the x- and y-axes, $\Sigma_x M = 0$ and $\Sigma_y M = 0$, respectively. The three equilibrium equations can be written in matrix notation as

$$\begin{bmatrix} 1 & 1 & 1 & 1 \\ -a & -a & a & a \\ -b & b & b & -b \end{bmatrix} \begin{Bmatrix} R_1 \\ R_2 \\ R_3 \\ R_4 \end{Bmatrix} = \begin{Bmatrix} P \\ e_y P \\ e_x P \end{Bmatrix} \tag{1.2}$$

The three equilibrium equations are expressed in terms of four unknown reactions. The four reactions cannot be determined from the three equilibrium equations. Thus, the problem is indeterminate. The indeterminate nature of the table problem was recognized first by Navier. Solution of the indeterminate table problem required augmenting the three equilibrium equations with one additional condition. The compatibility condition represented the additional condition.

The table problem can be solved following three different methods. These are (1) the IFM, which is the subject matter of this report; (2) the displacement method, which is currently popular; and (3) the redundant force method, which for all practical purposes has disappeared from current practice.

Integrated Force Method

In the IFM, the compatibility condition is formulated in terms of the four reactions as

$$\left(\frac{\ell}{AE}\right)\left(R_1 - R_2 + R_3 - R_4\right) = 0 \tag{1.3}$$

The three equilibrium equations (eq. (1.2)) and the compatibility condition (eq. (1.3)) represent four equations that can be solved for the four reactions. The IFM, which calculates the force unknowns directly without any reference to displacement, represents the direct force determination method. The basic IFM concept is to couple equilibrium and compatibility (as shown in eq. (1.1)), to calculate the forces. The IFM could not be developed earlier because the generation of the compatibility condition, as given in equation (1.3), had not been known to Navier (1785–1836) (see the Integrated Force Method—Basic Theory references, refs. 5 to 10), nor to other structural analysts, until Patnaik's formulation. In IFM, displacements, if required, can be back-calculated from reactions, see Illustrative Example 15.

Displacement Method

Navier, who recognized the indeterminate nature of the table problem but did not formulate the compatibility condition, developed a displacement solution to the problem. He observed that each equilibrium equation is associated with a displacement. For example, the table problem with three equilibrium equations has exactly three unknown displacements (see figs. 1.1(b), (c), and (d)). These are (1) the transverse displacement w along the z-axis, corresponding to the transverse EE (the first equation in equation (1.2)); (2) the rotation θ_x about the x-axis, corresponding to the first moment EE (the second equation in equation (1.2); and (3) the rotation θ_y about the y-axis, corresponding to the second moment EE (the third equation in equation (1.2)). The displacements (w, θ_x, θ_y) represent the dual variables of

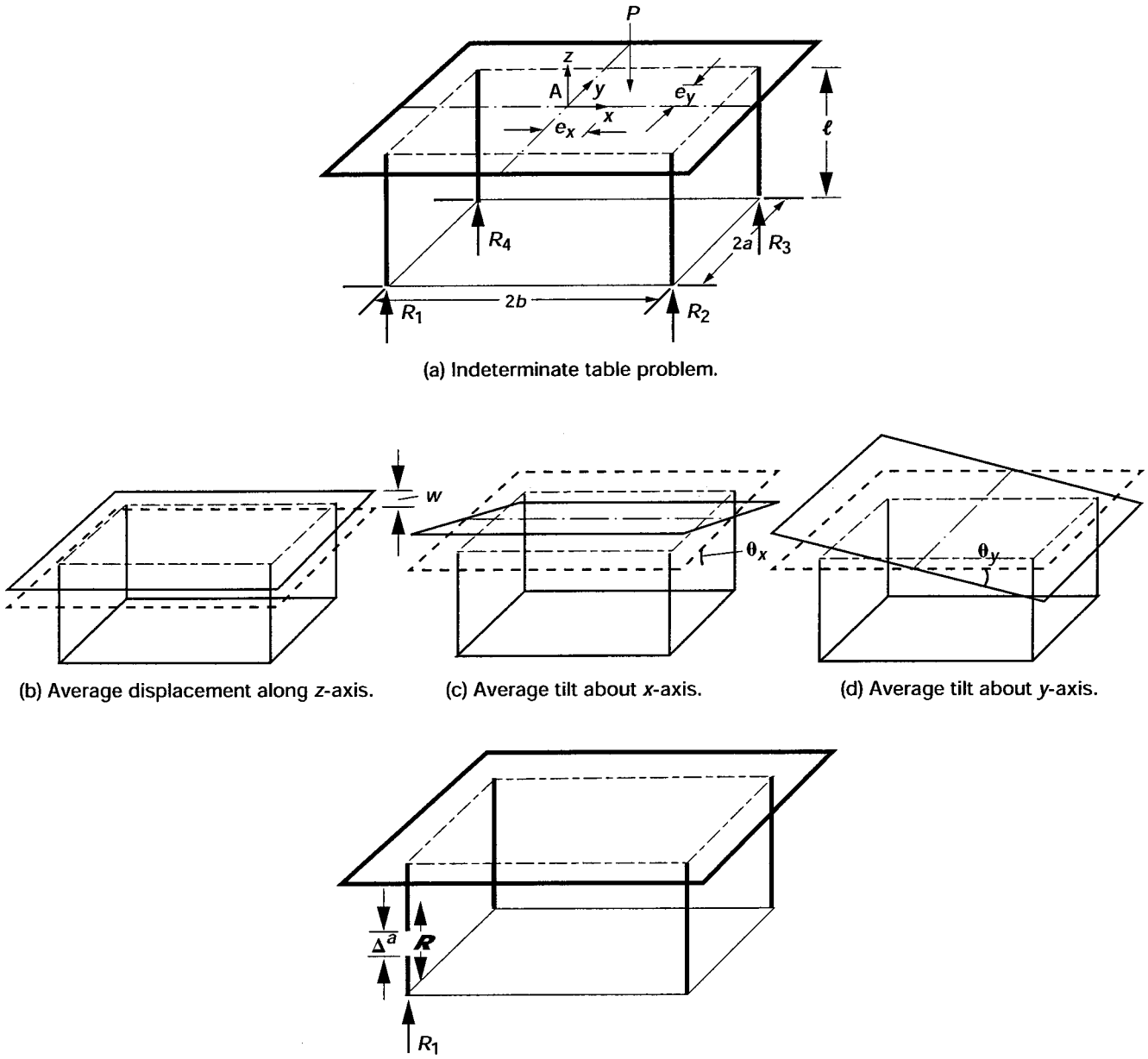

(a) Indeterminate table problem.

(b) Average displacement along *z*-axis.

(c) Average tilt about *x*-axis.

(d) Average tilt about *y*-axis.

(e) Redundant force method.

Figure 1.1.- Navier's table problem.

the EE given by equation (1.2) (see app. A). Navier expressed the three EE given by equation (1.2) in terms of the three displacements by eliminating four reactions (R_1, R_2, R_3, R_4) in favor of three displacements (w, θ_x, θ_y). Navier's equations can be written in symbolic form as

$$\begin{bmatrix} k_{11} & k_{12} & k_{13} \\ k_{12} & k_{22} & k_{23} \\ k_{13} & k_{23} & k_{33} \end{bmatrix} \begin{Bmatrix} w \\ \theta_x \\ \theta_y \end{Bmatrix} = \begin{Bmatrix} P \\ e_y P \\ e_x P \end{Bmatrix} \tag{1.4}$$

Here, k_{ij} $(i, j = 1, 2, 3)$ are the stiffness coefficients that can be calculated from the material and the geometrical properties of the table.

Solution of the stiffness equation (1.4) yields the displacement values (w, θ_x, θ_y). From the displacements, the reactions are recovered through back-substitutions. The displacement method is an indirect method because even when only the reactions are required, it is necessary to proceed through an intermediate step of forming and solving the stiffness equations. Even though Navier's genius did not formulate the CC given by equation (1.3), he did give us the displacement method that is currently popular.

Redundant Force Method

In the redundant force method, one of the table legs, for example the first leg of the table, is "cut" as shown in figure 1.1(e). The resulting table is referred to as the auxiliary determinate structure. The auxiliary structure with three unknown reactions (R_2, R_3, R_4) is solved using the three equilibrium equations given by equation (1.2), without the first column and R_1. The auxiliary solution $\left(R_2^P, R_3^P, R_4^P\right)$ obtained for the external load P is repeated next for a redundant force $\mathcal{R}$ in place of the first leg of the table (with $P = 0$) to obtain $R_2^{\mathcal{R}}, R_3^{\mathcal{R}}, R_4^{\mathcal{R}}$. Deformation Δ^a at the cut is obtained for the auxiliary structure for the external load P $\left(\text{or } R_2^P, R_3^P, R_4^P\right)$ and for the unknown redundant force $\mathcal{R}$ $\left(\text{or } R_2^{\mathcal{R}}, R_3^{\mathcal{R}}, R_4^{\mathcal{R}}\right)$. The deformation Δ^a is a function of the unknown redundant force $\mathcal{R}$, which represents the dual variable of the compatibility condition given by equation (1.3) (see app. A).

Deformation $\Delta^{\mathcal{R}}$ at the cut for the first leg only is also obtained for $\mathcal{R}$. The actual structure has no "cut." This condition is restored by closing the gap through the following continuity condition of the redundant force method.

$$\Delta^a + \Delta^R = 0 \tag{1.5}$$

Equation (1.5), which is a linear function of the redundant $\mathcal{R}$, is solved to obtain the redundant force $\mathcal{R}$. The reactions (R_1, R_2, R_3, R_4) and displacements (w, θ_x, θ_y) are back-calculated by using the value of $\mathcal{R}$. A solution using the redundant force method is given in appendix B for a beam problem.

The redundant force method was developed before the end of the 19th century by Clebsh (1833–1872), Maxwell (1831–1879), Castigliano (1847–1884), Mohr (1853–1918), and others. The IFM is compared with the displacement method and the redundant force method in references 29 and 30, respectively. Comparison of the three different methods is not the objective of this report. The objective is to describe the IFM to engineering students, who are encouraged to learn all three methods first, then compare and contrast the three methods. The purpose of this report is to show that indeterminate IFM analysis can be developed in a systematic manner. The straightforward procedure does not use redundant analysis. The theory will be developed from basic principles, and it will be self-contained. No prior knowledge of compatibility conditions or IFM theory is required. Discussion of the theory is limited to simple linear analysis problems suitable for strength of materials and elementary structural analysis courses. The IFM theory, however, is problem independent, and it can be easily generalized for solving difficult problems in linear, nonlinear, and dynamic regimes. For the sake of completeness, an elementary treatment of the IFM for finite element analysis is given in chapter 4.

This report is written to complement the existing textbooks on strength of materials and elementary structural analysis. Indeterminate IFM analysis for elementary problems will be presented in the subsequent two chapters: Basic Theory of Intermediate Analysis and Solution of Intermediate Problems. The IFM for finite element analysis is introduced in chapter 4. Five appendixes have been added. Appendix A reviews the classification of variables and methods of structural mechanics, appendix B discusses the superposition principles for indeterminate problems, appendix C summarizes some standard strength of materials formulas, appendix D summarizes the sign conventions used in the report, and appendix E lists the important symbols used in the report.

Chapter 2
Basic Theory of Indeterminate Analysis

Equilibrium and compatibility are the two fundamental concepts of the structural mechanics theory. The EE, however, are written in terms of forces, which can be the axial force, shear force, bending moment, or the torque. But the CC, in their original state, are expressed in terms of deformations, which can be elongations β^a, curvatures β^b, or relative angles of twist β^t. It is necessary to express the CC in terms of forces because it can then be coupled to the EE, which are already available in terms of forces. For this purpose, two more equation sets besides the EE and CC are required. These are the deformation displacement relations which are required to derive the compatibility conditions; and the force deformation relations that are used to eliminate forces in favor of deformations in the compatibility conditions. The four sets of structural mechanics equations are the

(1) Equilibrium equations (EE)
(2) Deformation displacement relations (DDR)
(3) Compatibility conditions (CC)
(4) Force deformation relations (FDR)

The four basic relations in terms of the three variables (forces, deformations, and displacements) are developed and illustrated in this chapter. Solving indeterminate problems using these relations is the subject matter of chapter 3. The IFM solution yields forces and displacements. Stresses and strains that can be induced in a structure can be back-calculated from forces by using standard formulas that are summarized in appendix C.

Equilibrium Equations

Force balance is the central concept behind the equilibrium equations. The four types of forces—axial force F, shear force V, bending moment M, and torque T—at a point B for a beam of length ℓ, depth d, and width b which is oriented along the abscissa of a Cartesian coordinate system are shown in figure 2.1. The axial, or normal, force F is along the x-axis. The shear force V is along the y-axis. The bending moment M in the x-y plane is directed along the z-axis. Torque T in the y-z plane is directed along the x-axis. For simplicity and clarity, we will confine our discussions to two-dimensional problems only. Even two-dimensional problems utilize the z-direction to define moment. Standard sign convention is followed—that is, the forces are considered positive when they are directed along positive axes (as described in app. D).

The equilibrium equations for the four types of forces common to both determinate and indeterminate analysis can be generated as follows (see fig. 2.1):

(1) The sum of all axial forces along the x-axis is zero:
$$\sum_{x\text{-axis}} F = 0 \tag{2.1a}$$

(2) The sum of all shear forces along the y-axis is zero:
$$\sum_{y\text{-axis}} V = 0 \tag{2.1b}$$

(3) The sum of all moments along the z-axis is zero:
$$\sum_{z\text{-axis}} M = 0 \tag{2.1c}$$

(4) The sum of all torques along the x-axis is zero:
$$\sum_{x\text{-axis}} T = 0 \tag{2.1d}$$

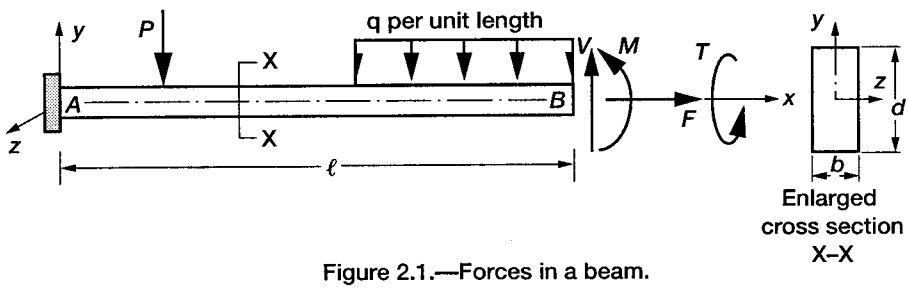

Figure 2.1.—Forces in a beam.

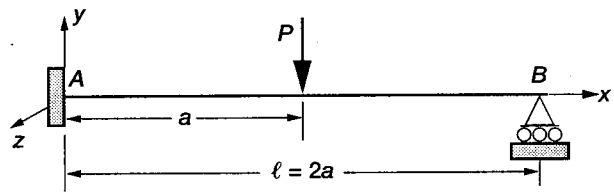

(a) Propped cantilever beam.

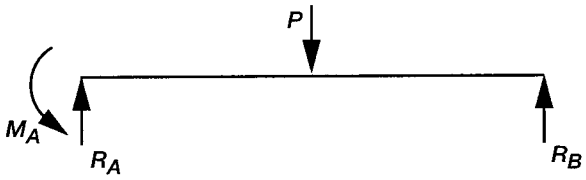

(b) Reactions as unknowns.

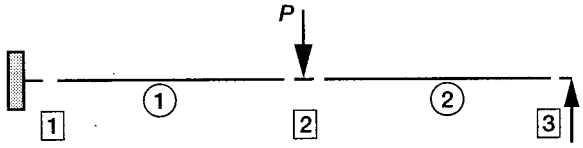

(c) Beam divided into two elements, 1 and 2, and three nodes, 1, 2, and 3.

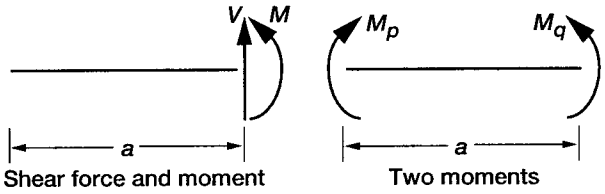

(d) Selection of force unknowns.

Figure 2.2.—Analysis of a propped cantilever beam.

Simultaneous application of all four EE given by equation (2.1) is seldom required in the solution of simple structural mechanics problems. For example, truss analyses use equilibrium along coordinate axes; beam analyses require moment and shear equilibrium equations, and shaft torsion analyses use the equilibrium of torques.

Formulation of the EE is illustrated by considering a propped cantilever beam that is fixed at A and simply supported at B, as shown in figure 2.2(a). The beam, which has a span of ($\ell = 2a$), is subjected to a transverse external load P at the center of the span. Equilibrium equations can be developed by considering either reactions or internal forces as the unknowns. Both approaches, which for the purpose of analysis are equivalent, are illustrated for the problem. The sign convention summarized in appendix D is followed.

Approach 1: Reactions as unknowns.—This method considers the three reactions as the unknowns of the problem. These are the reaction R_A and moment M_A at support A and the reaction R_B at support B, as shown in the free-body diagram in figure 2.2(b). Summation of the forces along the y-axis and the moments along the z-axis at point B yields the two EE:

$$\sum_{y\text{-axis}} V = 0 \qquad R_A + R_B - P = 0$$

$$\sum_{x\text{-axis}} M = 0 \qquad M_A - (R_A)\ell + \frac{P\ell}{2} = 0 \tag{2.2a}$$

In matrix notation, the two EE can be written as

$$\begin{bmatrix} -1 & -1 & 0 \\ \ell & 0 & -1 \end{bmatrix} \begin{Bmatrix} R_A \\ R_B \\ M_A \end{Bmatrix} = \begin{Bmatrix} -P \\ \dfrac{P\ell}{2} \end{Bmatrix} \tag{2.2b}$$

or

$$[B]\{F\} = \{P\} \tag{2.2c}$$

In equation (2.2c), $[B]$ is a rectangular equilibrium matrix of dimension ($m \times n$), where $m = 2$ is the number of rows or the number of EE, and $n = 3$ is the number of columns or the number of unknown forces; $\{F\}$ is the unknown force vector of dimension $n = 3$; and $\{P\}$ is the load vector of dimension $m = 2$. The components of the load vector $\{P\}$ in the EE must be aligned along the positive directions. The load ($-P$) is along the positive y-axis and the moment ($P\ell/2$) is directed along the positive z-axis (see app. D). Since the two EE given by equation (2.2b) are expressed in terms of three unknowns (R_A, R_B, M_A), the EE alone cannot be solved to determine the three reactions. The problem is indeterminate. The degree of indeterminacy designated by r can be calculated as

$$\begin{cases} r = \text{number of unknown forces } (n) - \text{number of equilibrium equations } (m) \\ \text{or} \\ r = n - m = \text{degree of indeterminacy} \end{cases} \tag{2.3}$$

The structure is one-degree indeterminate since $r = 1$. One additional equation is necessary to solve the problem. This is the compatibility condition of the problem, which is discussed later.

Approach 2: Internal forces as unknowns.—In this approach, the beam is divided into elements and nodes. The cantilever beam is divided into two elements, which are the circled 1 and 2, and three nodes (1, 2, 3), which are shown in squares in figure 2.2(c). Typically, boundary points, load application points, change of member orientations, and change of material constitute nodes. An element is a member connecting two nodes. For a beam element, the force distribution can be determined if two internal forces anywhere in its span are known. The pair of force unknowns can be a moment M and a shear force V or two moments (M_p, M_q) as depicted in figure 2.2(d). The opposite direction is used for M_p and M_q because the moment equilibrium is satisfied, or $M_p = M_q$. Although both

force systems are equivalent, we prefer the two-moment system because both moments have the same unit of measure—force times distance. The two-moment system is further expanded in figure 2.3(a), where associated shear forces induced at nodes p and q are determined by taking moments at locations q and p, respectively, as

$$V_p = \frac{M_q - M_p}{a}$$

$$V_q = \frac{M_p - M_q}{a} \tag{2.4}$$

The moments (M_p, M_q) and associated shear forces (V_p, V_q) for the element depicted in figure 2.3(a) satisfy both transverse and rotational equilibrium conditions. In this approach, the EE are written along the free displacement directions for all nodes in the structure. We avoid writing the EE along the restrained directions, such as at support A, or node 1 (along the y-displacement and z-rotational directions), and at support B, or node 3 (along the y-displacement direction) in figure 2.3(c), because this process excludes the reactions as additional unknown force variables, thereby reducing the number of equations. Reactions at the restrained nodes are back-calculated from the forces. For this example, both cases—internal forces, as well as internal forces and reactions, as unknowns—are illustrated:

Case 1—Internal forces as unknowns: Each beam element has two moments, and the total structure has four unknown moments (M_1, M_2, M_3, M_4). Rotational EE at the simple support B yield $M_4 = 0$, and the

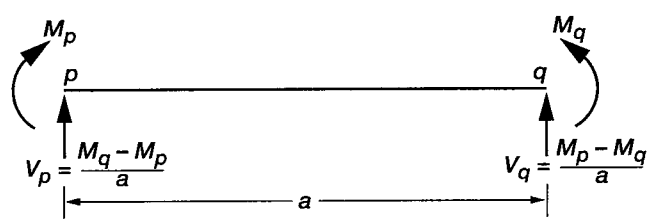

(a) Beam element with two unknown moments (M_p, M_q).

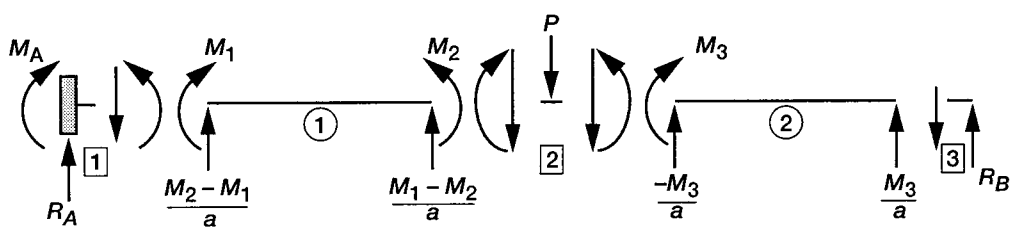

(b) Free-body diagram for cantilever beam shown in figure. 2.2(a).

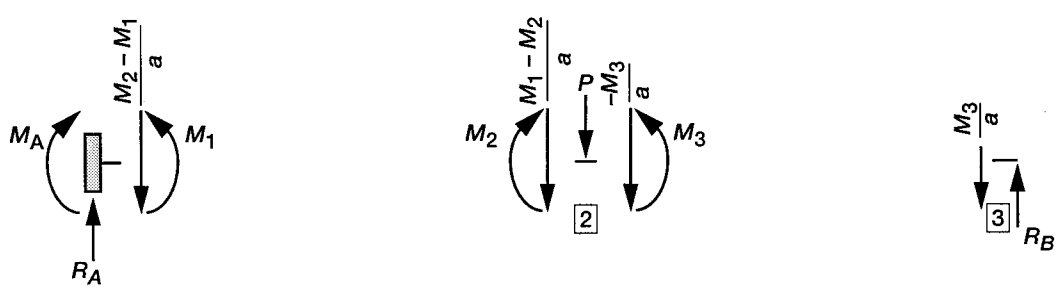

Forces at node 1. Forces at node 2. Forces at node 3.

(c) Equilibrium at nodes.

Figure 2.3.—Internal force system.

unknowns reduce to three moments: M_1, M_2, and M_3, as shown in the free-body diagram of the structure in figure 2.3(b). Equilibrium equations are not written for the clamped node 1, which is fully restrained. Node 2 can displace and rotate along the y-axis and z-axis, respectively. Two EE that can be written for node 2 along the two displacements are as follows (see fig. 2.3(c)):

Along the y-direction $$\sum_y V = 0 \quad \rightarrow \quad \frac{(M_2 - M_1)}{a} - P + \frac{M_3}{a} = 0$$

Along the z-direction $$\sum_z M = 0 \quad \rightarrow \quad -M_2 + M_3 = 0$$

For node 3, the rotational equilibrium ($M_4 = 0$) was used earlier to reduce the moment unknowns from four (M_1, M_2, M_3, M_4) to three (M_1, M_2, M_3). The transverse equilibrium at node 3 was avoided to exclude the reaction R_B as an additional unknown. Node 3, in other words, provides no additional equilibrium equation. The two EE of the cantilever beam can be written in matrix notation.

$$\begin{bmatrix} 1/a & -1/a & -1/a \\ 0 & 1 & -1 \end{bmatrix} \begin{Bmatrix} M_1 \\ M_2 \\ M_3 \end{Bmatrix} = \begin{Bmatrix} -P \\ 0 \end{Bmatrix} \tag{2.5}$$

The EE given by equation (2.5) is one-degree indeterminate because two equations are expressed in terms of three unknown moments. One additional CC is required for the determination of the moments. Once the moments are known, the reactions at the clamped support and the simple support can be back-calculated by writing the EE along the restrained directions, such as along the transverse and rotational directions at support A and along the y-direction at support B, as follows:

$$\sum_y V \text{ at node 1} \qquad R_A - \frac{(M_2 - M_1)}{a} = 0 \quad \text{or} \quad R_A = \frac{M_2 - M_1}{a}$$

$$\sum_z M \text{ at node 1} \qquad -M_A + M_1 = 0 \quad \text{or} \quad M_A = M_1$$

$$\sum_y V \text{ at node 3} \qquad R_B - \frac{M_3}{a} = 0 \quad \text{or} \quad R_B = \frac{M_3}{a} \tag{2.6a}$$

The reaction vector $\{\mathcal{R}\}$ in matrix notation can be written as

$$\begin{Bmatrix} R_A \\ M_A \\ R_B \end{Bmatrix} = \begin{bmatrix} -1/a & 1/a & 0 \\ 1 & 0 & 0 \\ 0 & 0 & 1/a \end{bmatrix} \begin{Bmatrix} M_1 \\ M_2 \\ M_3 \end{Bmatrix} \tag{2.6b}$$

or in matrix notation

$$\{R\} = [B_{\mathcal{R}}]\,\{F\}$$

where $[B_{\mathcal{R}}]$ is the equilibrium matrix required to back-calculate reactions from the internal forces $\{F\}$.

Case 2—Internal forces and reactions as unknowns: In this approach, the EE are written at all nodes—that is, restrained as well as free nodes. There are two EE for each of the three nodes (1, 2, 3), or there are six EE in terms of seven unknown forces, consisting of four internal moments and three reactions (M_1, M_2, M_3, M_4; M_A, R_A, R_B). These six equilibrium equations follow:

$$\begin{array}{r} \Sigma V = 0 \text{ at node } 1 \\ \Sigma M = 0 \text{ at node } 1 \\ \Sigma V = 0 \text{ at node } 2 \\ \Sigma M = 0 \text{ at node } 2 \\ \Sigma V = 0 \text{ at node } 3 \\ \Sigma M = 0 \text{ at node } 3 \end{array} \begin{bmatrix} -1/a & 1/a & 0 & 0 & 0 & -1 & 0 \\ -1 & 0 & 0 & 0 & 1 & 0 & 0 \\ 1/a & -1/a & -1/a & 0 & 0 & 0 & 0 \\ 0 & 1 & -1 & 0 & 0 & 0 & 0 \\ 0 & 0 & 1/a & 0 & 0 & 0 & -1 \\ 0 & 0 & 0 & 1 & 0 & 0 & 0 \end{bmatrix} \begin{Bmatrix} M_1 \\ M_2 \\ M_3 \\ M_4 \\ M_A \\ R_A \\ R_B \end{Bmatrix} = \begin{Bmatrix} 0 \\ 0 \\ -P \\ 0 \\ 0 \\ 0 \end{Bmatrix} \tag{2.7}$$

The EE at the nodes given by equation (2.7) represent a concatenation of equation (2.5), the boundary moment condition $M_4 = 0$, and equation (2.6a).

Different choices of unknown forces neither increase nor decrease the degree of indeterminacy of a structure. For example, the propped cantilever beam is one-degree indeterminate, or $r = 1$, for all three choices of force unknowns: (1) reactions (R_A, R_B, M_A), $n = 3$, $m = 2$, and $r = n - m = 1$; (2) internal moments (M_1, M_2, M_3), $n = 3$, $m = 2$, and $r = 1$; and (3) moments and reactions (M_1, M_2, . . . , R_B), $n = 7$, $m = 6$, and $r = 1$. It is preferable to work with fewer equations (eq. (2.2b) or (2.5)) rather than a large number of equations (eq. (2.7)), especially for manual calculations. Thus, we can understand and appreciate the basic principles of indeterminate analysis without intensive numerical calculations.

Compatibility Conditions

For indeterminate problems, compliance of deformations ($f(\beta_1, \beta_2, \ldots, \beta_n) = 0$) is the central compatibility concept. The CC can be derived in two steps:

Step 1—Derive the deformation displacement relations (DDR).

Step 2—Eliminate the displacements from the deformation displacement relations to obtain the compatibility conditions.

Step 1—Derive the deformation displacement relations: The DDR is an important structural mechanics relation. The DDR is the central ingredient behind both the equilibrium equations and the compatibility conditions. The EE that was generated earlier from the force balance principle can be alternatively derived from the DDR by using variational calculus. Likewise, the reverse is true; that is, the DDR can be derived from the equilibrium equations. The CC can be generated from the DDR by direct elimination of the displacements (see app. A).

Deformation Displacement Relations

We will derive the DDR from the EE that have been formulated earlier. The deformations are associated with each type of force variable. Extension is the deformation for normal or axial force. Likewise, for the bending moment the curvature is the deformation. For shear force it is the shear deformation, and for torque it is the relative twist angle. In the derivation of the DDR, it is not essential to know the exact nature of the deformations. These will be further explained during the discussion of the force deformation relations. Here, it is sufficient to understand that half the product (force times deformation) represents the internal strain energy *IE* that is stored in a structure. The internal energy can be written as

$$IE = \frac{1}{2}\{F\}^T\{\beta\} = \frac{1}{2}(F_1\beta_1 + F_2\beta_2 +, \ldots, + F_n\beta_n) \tag{2.8}$$

where the deformations ($\beta_1, \beta_2, \ldots, \beta_n$) correspond to the n internal forces ($F_1, F_2, \ldots, F_n$), respectively. Likewise, the work done W by the external loads can be written as

$$W = \frac{1}{2}\{P\}^T\{X\} = \frac{1}{2}(P_1X_1 + P_2X_2 +, \ldots, + P_mX_m) \tag{2.9}$$

where the displacements ($X_1, X_2, \ldots, X_m$) correspond to the m external loads ($P_1, P_2, \ldots, P_m$), respectively. In equations (2.8) and (2.9), deformation $\{\beta\}$ and force $\{F\}$ are n-component vectors, whereas displacement $\{X\}$ and load $\{P\}$ are m-component vectors (with degree of indeterminacy $r = n - m$).

According to the work-energy conservation theorem, the internal energy (IE) stored in the structure is equal to the work done by the external load (W), or

$$IE = W$$

or

$$\frac{1}{2}\{F\}^T\{\beta\} = \frac{1}{2}\{P\}^T\{X\} \tag{2.10}$$

In equation (2.10), the load vector $\{P\}$ can be eliminated in favor of internal forces $\{F\}$ by using the EE ($[B]\{F\} = \{P\}$) to obtain the following relation:

$$\{F\}^T\{\beta\} = \{F\}^T[B]^T\{X\} \tag{2.11a}$$

or

$$\{F\}^T\left(\{\beta\} - [B]^T\{X\}\right) = 0 \tag{2.11b}$$

Because the n forces can be arbitrary and $\{F\}$ is not a null vector, its coefficient should be zero, which yields the DDR as

$$\{\beta\} = [B]^T\{X\} \tag{2.12}$$

The DDR are easily defined through the equilibrium matrix $[B]$, which is essential for analysis. Generation of the DDR does not require additional effort once the equilibrium matrix $[B]$ is known.

In the derivation of the DDR given by equation (2.12), it is assumed that load $\{P\}$ and displacement $\{X\}$ are in the same direction. The directions of the displacement components $\{X\}$ in the DDR given by equation (2.12) are along the corresponding directions of load components $\{P\}$. Thus, orientation of the load vector $\{P\}$ in the EE ($[B]\{F\} = \{P\}$) along positive axes will yield displacements in the positive axes, see appendix D.

Step 2—Eliminate the displacements from the deformation displacement relations to obtain the compatibility conditions: In the DDR given by equation (2.12), n deformations $\{\beta\}$ are expressed in terms of m displacements $\{X\}$. Elimination of m displacements from the n DDR yields $r = n - m$ equality constraints as

$$[C]\{\beta\} = \{0\} \tag{2.13a}$$

Equation (2.13a) represents the r compatibility conditions of the indeterminate structure with n force and m displacement unknowns. The compatibility matrix $[C]$ with r rows and n columns has full row rank r.

The deformation $\{\beta\}$ in the CC given by equation (2.13a) represents total deformation consisting of an elastic component $\{\beta\}^e$ and initial component $\{\beta\}^0$ as

$$\{\beta\} = \{\beta\}^e + \{\beta\}^0 \tag{2.13b}$$

The CC in terms of elastic deformation can be written as

$$[C]\{\beta\} = [C]\{\beta\}^e + [C]\{\beta\}^0 = 0 \tag{2.13c}$$

or

$$[C]\{\beta\}^e = \{\delta R\}$$

where

$$\{\delta R\} = -[C]\{\beta\}^0 \tag{2.13d}$$

The compatibility condition, when expressed in terms of total deformation, represents a homogeneous equation, such as equation (2.13a). The CC becomes a nonhomogeneous equation when it is written in terms of elastic deformations, such as in equation (2.13d).

Initial Deformations and Support Settling

Initial deformations $\{\beta\}^0$ are included in the right side of the compatibility conditions through the effective initial deformation vector $\{\delta R\}$ defined in equation (2.13d). Such deformations, when due to thermal effects, represent temperature strains, which can be written as the product of the coefficient of thermal expansion α and the temperature change ΔT as $\varepsilon^t = \alpha\,\Delta T$. Initial deformation due to thermal strains ($\{\beta\}^0 = \{\varepsilon\}^t$) can be easily calculated and included in the compatibility conditions. These are not further elaborated on here but are discussed in the solution of the examples in chapter 3.

Initial deformations $\{\beta\}^0$ due to support settling can be calculated from energy considerations. Let us assume that a support settles by $\overline{X}$ amount and that the corresponding reaction induced at the support is R. The reaction that can be back-calculated from forces $\{F\}$, by using equation (2.6b), can be rewritten for a single reaction R as

$$R = \{\mathcal{B}_r\}^T \{F\} \tag{2.14a}$$

where $\{\mathcal{B}_r\}^T$ represents a row of the equilibrium matrix $[B_{\mathcal{R}}]$ in equation (2.6b).

The work done by the induced reaction R and the prescribed displacement $\overline{X}$ can be written as

$$W = -\frac{1}{2}\overline{X}R \tag{2.14b}$$

The work term is negative because the reaction R and displacement $\overline{X}$ are in opposite directions.

The strain energy IE can be written as

$$IE = \frac{1}{2}\left\{\{\beta\}^0\right\}^T \{F\} \tag{2.14c}$$

where $\{\beta\}^0$ represents initial deformation due to an $\overline{X}$ amount of support settling.

The work-energy conservation theorem ($W = IE$) can be written as

$$-\frac{1}{2}\overline{X}R = \frac{1}{2}\left\{\{\beta\}^0\right\}^T \{F\} \tag{2.14d}$$

The reaction R is eliminated between equation (2.14a) and (2.14d) to obtain

$$\{\beta\}^0 = \{\mathcal{B}_r\}_1 \overline{X}_1 + \{\mathcal{B}_r\}_2 \overline{X}_2 +, \ldots, + \{\mathcal{B}_r\}_p \overline{X}_p$$

or

$$\underset{n\times 1}{\{\beta\}^0} = \underset{n\times p}{[\mathcal{B}_r]} \underset{p\times 1}{\{\overline{X}\}}$$

Because $\{F\}$ is arbitrary and it is not a null vector,

$$\{\beta\}^0 = -\{\mathcal{B}_r\}\overline{X} \tag{2.14f}$$

Equation (2.14f) yields the initial deformation vector for the settling of a single support by $\overline{X}$ amount. The equation can be generalized when a p number of supports settle simultaneously by the amount $\overline{X}_1, \overline{X}_2, \cdots, \overline{X}_p$ as

$$\{\beta\}^0 = \{\mathcal{B}_r\}_1 \overline{X}_1 + \{\mathcal{B}_r\}_2 \overline{X}_2 +, \ldots, + \{\mathcal{B}_r\}_p \overline{X}_p$$

or

$$\underset{n\times 1}{\{\beta\}^0} = \underset{n\times p}{[\mathcal{B}_r]} \underset{p\times 1}{\{\overline{X}\}}$$

$$\{\beta\}^0 = -[\mathcal{B}_{\mathcal{R}}]^T \{\overline{X}\} \tag{2.15}$$

where the p columns of matrix $[\mathcal{B}_r]$ correspond to p rows of the equilibrium matrix $[B_{\mathcal{R}}]$ in equation (2.6b) for the p number of prescribed displacements $\{\overline{X}\}$ due to the simultaneous settling of the p supports. Equation (2.15) is similar to the DDR ($\{\beta\} = [B]^T\{X\}$) except that the EE are written for the restrained nodes.

Null Property of the Equilibrium Equation and Compatibility Condition Matrices

The following null property ($[B][C]^T = [0]$ or $[C][B]^T = [0]$) of the equilibrium and compatibility matrices can be verified from equations (2.12a) and (2.13a). Elimination of the deformation between equations (2.12) and (2.13a) yields

$$[C][B]^T\{X\} = [0] \tag{2.16}$$

Because displacement $\{X\}$ is arbitrary and it is not a null vector, its coefficient matrix must vanish, or

$$[C][B]^T = [0] \quad \text{or} \quad [B][C]^T = [0] \tag{2.17}$$

For correctness, the null property of the equilibrium and the compatibility matrices should be verified after the generation of the matrices.

Illustration for Compatibility Conditions

The example of the propped cantilever beam used earlier to illustrate the generation of the EE is used again to illustrate the calculation of the CC. The two simple steps mentioned earlier, (1) generate the DDR and (2) eliminate displacements from the DDR to obtain the CC, are followed. The CC are generated for all three cases for which EE were developed earlier in equations (2.2b), (2.5), and (2.7).

Case 1: Reactions (R_A, R_B, M_A) as unknowns (see eq. (2.2b)).—

Step 1—Derive the deformation displacement relations: These relations ($\{\beta\} = [B]^T\{X\}$) are obtained from equation (2.2b) as

$$\beta_1 = -X_1 + \ell X_2$$

$$\beta_2 = -X_1$$

$$\beta_3 = -X_2 \tag{2.18}$$

where deformations (β_1, β_2, β_3) are associated with the reactions (R_A, R_B, M_A), respectively. The displacements (X_1, X_2) are also referred to as the dual variables of the first and second EE given by equation (2.2b) (see app. A).

Step 2—Eliminate the displacements from the deformation displacement relations to obtain the compatibility conditions: Two displacements (X_1 and X_2) are eliminated between the three DDR given by equation (2.18) to obtain the single CC in deformations as

$$\beta_1 - \beta_2 + \ell\beta_3 = 0$$

or

$$[C]\{\beta\} = \begin{bmatrix} 1 & -1 & \ell \end{bmatrix} \begin{Bmatrix} \beta_1 \\ \beta_2 \\ \beta_3 \end{Bmatrix} = 0 \tag{2.19}$$

Thus,

$$[C] = \begin{bmatrix} 1 & -1 & \ell \end{bmatrix}$$

The null property ($[B][C]^T$) for the EE and CC matrices can be verified as

$$\begin{bmatrix} -1 & -1 & 0 \\ \ell & 0 & -1 \end{bmatrix} \begin{bmatrix} 1 \\ -1 \\ \ell \end{bmatrix} = \begin{bmatrix} 0 \\ 0 \end{bmatrix} \tag{2.20}$$

Case 2: Internal forces (M_1, M_2, M_3) as unknowns (see eq. (2.5)).—For this choice of force variables (M_1, M_2, M_3), the following CC is obtained by writing three DDR from the two EE given by equation (2.5) and then eliminating the two displacements:

$$2\beta_1 + \beta_2 + \beta_3 = 0$$

or

$$\begin{bmatrix} 2 & 1 & 1 \end{bmatrix} \begin{Bmatrix} \beta_1 \\ \beta_2 \\ \beta_3 \end{Bmatrix} = 0 \tag{2.21a}$$

Thus,

$$[C] = \begin{bmatrix} 2 & 1 & 1 \end{bmatrix}$$

The reader can derive and verify the CC. The null property of the EE and CC matrices, $[B][C]^T = [0]$, can be verified as

$$\begin{bmatrix} 1/a & -1/a & -1/a \\ 0 & 1 & -1 \end{bmatrix} \begin{bmatrix} 2 \\ 1 \\ 1 \end{bmatrix} = \begin{bmatrix} 0 \\ 0 \end{bmatrix} \tag{2.21b}$$

Notice that the elements of matrix $[C]$ given by equation (2.21a) are dimensionless. This is because the deformations (β_1, β_2, β_3), which are rotations corresponding to the moments (M_1, M_2, M_3), have the same unit of measure. In contrast, the units of measure of different elements of the $[C]$ matrix given by equation (2.19) differ because deformations β_1 and β_2, which correspond to reactions, are extensions measured in length units; whereas the deformation β_3, which is due to a moment, is a rotation that is dimensionless.

Case 3: Internal forces and reactions as unknowns (see eq. (2.7)).—Determination of CC for this selection of forces also starts with the formulation of the seven DDR ($\{\beta\} = [B]^T\{X\}$) expressed in terms of six displacements (see eq. (2.7)):

$$\beta_1 = -\frac{X_1}{a} - X_2 + \frac{X_3}{a} \qquad \beta_4 = X_6$$

$$\beta_2 = \frac{X_1}{a} - \frac{X_3}{a} + X_4 \qquad \beta_5 = X_2$$

$$\beta_3 = -\frac{X_3}{a} - X_4 + \frac{X_5}{a} \qquad \beta_6 = -X_1$$

$$\beta_7 = -X_5 \tag{2.22}$$

Elimination of the six displacements ($X_1, X_2, \ldots, X_6$) from the seven deformation displacement relations given by equation (2.22) yields the single CC in terms of the seven deformations ($\beta_1, \beta_2, \ldots, \beta_7$) as follows:

$$2\beta_1 + \beta_2 + \beta_3 + 2\beta_5 - \frac{\beta_6}{a} + \frac{\beta_7}{a} = 0 \tag{2.23a}$$

or

$$\begin{bmatrix} 2 & 1 & 1 & 0 & 2 & -1/a & 1/a \end{bmatrix} \begin{Bmatrix} \beta_1 \\ \beta_2 \\ \beta_3 \\ \beta_4 \\ \beta_5 \\ \beta_6 \\ \beta_7 \end{Bmatrix} = 0$$

Thus,

$$[\mathrm{C}] = \begin{bmatrix} 2 & 1 & 1 & 0 & 2 & -1/a & 1/a \end{bmatrix} \tag{2.23b}$$

The null property of the equilibrium and compatibility matrices can be verified from the EE and the CC, which are given by equations (2.7) and (2.23b), respectively, as

$$\underset{6\times7}{[B]}\ \underset{7\times1}{[C]^T} = \underset{6\times1}{\begin{bmatrix} 0 \\ 0 \\ 0 \\ 0 \\ 0 \\ 0 \end{bmatrix}} \tag{2.24}$$

The problem has only one compatibility condition, irrespective of the choice of force unknowns, such as reactions, internal forces, and their combinations. However, the EE and CC matrices, $[B]$ and $[C]$, respectively, differ depending on the choice of force unknowns.

Force Deformation Relation

The equilibrium equations are expressed in terms of force variables $\{F\}$ as $[B]\{F\} = \{P\}$. Likewise, the compatibility conditions are written in terms of deformations $\{\beta\}$ as $[C]\{\beta\} = \{0\}$. Since indeterminate analysis requires the coupling of the EE and CC, it is necessary to establish relations between forces and deformations. The force deformation relation (FDR) can be used to express the CC in terms of forces, which can then be coupled to the EE, which are already available in terms of forces. The FDR of strength of materials is equivalent to the familiar Hooke's law of elasticity, which relates stress σ to strain ε through the Young's modulus E of the material ($\sigma = E\varepsilon$). The FDR can be obtained from Hooke's law by relating stress to force and deformation to strain. For a normal, or axial, force F acting in a bar with a cross-sectional area A and length ℓ, as shown in figure 2.4, the FDR can be obtained as follows:

$$\sigma = \frac{F}{A} \quad \text{and} \quad \varepsilon = \frac{\beta^a}{\ell} \tag{2.25}$$

Hooke's law can be written in terms of force F and deformation β^a as follows:

$$\varepsilon = \frac{\beta^a}{\ell} = \frac{\sigma}{E} = \frac{F}{AE}$$

or

$$\beta^a = \left(\frac{\ell}{AE}\right)F = gF \tag{2.26a}$$

where the flexibility coefficient is defined as

$$g = \frac{\ell}{AE} \tag{2.26b}$$

The flexibility coefficient ($g = \ell/AE$) represents the deformation in the bar for a unit value of the force ($F = 1$).

Force deformation relation from energy considerations.—The FDR given by equation (2.26a) can be alternatively derived from energy considerations. The first derivative of strain energy U with respect to force F is equal to the deformation β^a corresponding to that force F,

or

$$\frac{\partial U}{\partial F} = \beta^a \tag{2.27}$$

Before equation (2.27) can be used, the strain, or internal, energy has to be defined. For the case of the normal force acting in a uniform bar of cross-sectional area A (as shown in fig. 2.4), the strain energy can be defined as

$$U = \int_0^\ell \frac{\sigma\varepsilon}{2} A\,dx \tag{2.28}$$

When stress is eliminated in favor of force as $\sigma = F/A$ and strain in favor of force as $\varepsilon = F/AE$, the strain energy for a uniform bar of area A can be obtained only in terms of force F as

$$U = \int_0^\ell \frac{F^2}{2AE}\,dx = \frac{F^2\ell}{2AE}$$

or

$$\beta^a = \frac{\partial U}{\partial F} = \left(\frac{\ell}{AE}\right)F \tag{2.29}$$

Notice that equation (2.26a), which is derived from Hooke's law, and equation (2.29), which is obtained from energy considerations, are identical. Experimentation is the basis of Hooke's law. The alternative, energy-based derivation, however, is analytical in nature even though the definition of strain energy requires material constants such as the Young's modulus E. In the analytical indeterminate analysis, we prefer the energy-based derivation for FDR because in this approach all four analysis equations (EE, CC, DDR, and FDR) can be derived analytically.

Strain Energy Expression for Force Deformation Relations

Strain energy is a powerful scalar quantity that can be used to derive various analysis equations and formulations of structural mechanics (see app. A). In this elementary treatment, a definition of the energy scalar that is sufficient to derive the force deformation relations for beams will be presented. For the discussion here, the strain energy scalar can be defined as follows:

$$U = \int_v \left(\frac{\sigma^2}{2E} + \sigma \alpha \Delta T \right) dv \tag{2.30}$$

where

E	Young's modulus
ΔT	change in temperature
v	volume of the beam
α	coefficient of thermal expansion
σ	stress in the beam

Equation (2.30) is specialized next to obtain the explicit strain energy expression for axial force, bending moment, and shear force, as well as for pure torsion.

Case 1: Axial force in a bar.—For the bar shown in figure 2.4, the strain energy scalar given by equation (2.30) can be specialized with the following definitions:

$$\text{Elemental volume,} \quad dv = A dx$$

$$\sigma = \frac{F}{A} \tag{2.31}$$

$$U^a = \int_0^\ell \left\{ \frac{1}{2E} \left(\frac{F}{A} \right)^2 + \frac{F}{A} \alpha \Delta T \right\} A\, dx$$

where U^a is the strain energy stored in the bar subjected to an axial force F and a ΔT change in temperature. For a uniform bar of length ℓ and cross-sectional area A, the strain energy U^a is simplified to

$$U^a = \frac{F^2 \ell}{2AE} + F \alpha \Delta T \ell \tag{2.32}$$

The axial elongation in the bar β^a is obtained as the first derivative of the scalar U^a with respect to the axial force F as

$$\beta^a = \frac{dU^a}{dF} = \left(\frac{\ell}{AE} \right) F + \alpha \Delta T \ell \tag{2.33}$$

In the absence of temperature ($\Delta T = 0$), the force deformation relation given by equation (2.33) simplifies to equation (2.26a).

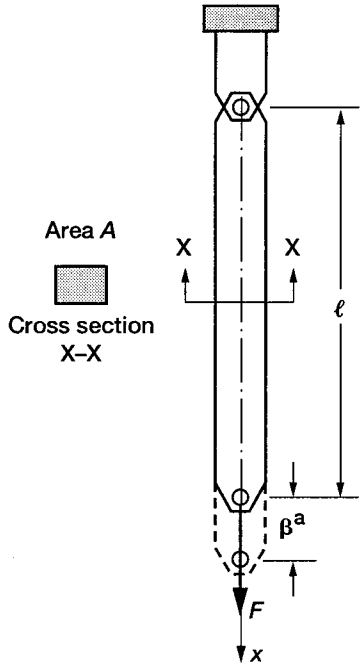

Figure 2.4.—Elongation, β^a, due to axial force F in the bar.

Case 2: Bending of a beam.—The bending of a beam (see fig. 2.5(a)) involves the interaction of a bending moment $\mathcal{M}$ and a shear force V (as shown in fig. 2.5(b)). However, in the energy expression it is customary to include only the strain energy due to bending moment. Because the strain energy due to shear force is small, it is neglected for simple structural mechanics applications without an appreciable adverse effect. By considering the beam shown in figure 2.5(a) as an example, we can obtain the strain energy in flexure from equation (2.30) with the following specialization.

Stress is calculated from the standard flexure formula, see appendix C. Stress σ at a location x along the beam length and at a distance y from the neutral axis shown in figure 2.5(c) can be written as

$$\frac{\sigma}{y} = \frac{\mathcal{M}}{I} \tag{2.34}$$

where I is the moment of inertia of the beam cross section and $\mathcal{M}$ is the bending moment. The script $\mathcal{M}$ is used for moment function at x as $\mathcal{M}$ or $\mathcal{M}(x)$. The incremental volume dv for the beam with a uniform width b shown in figure 2.5(a) can be written as

$$dv = b\,dy\,dx \tag{2.35}$$

where dy and dx are incremental lengths along the depth and length of the beam, respectively.

When we substitute the stress from equation (2.34) and the incremental volume from equation (2.35) into the energy expression given by equation (2.30), the following equation is obtained for the strain energy U^b in flexure:

$$U^b = \int_0^{\ell} \frac{1}{2}\left[\left(\frac{\mathcal{M}^2}{EI}\right)\left\{\int_{-d/2}^{d/2} \frac{b\,y^2 dy}{I}\right\} - \int_0^{\ell} \frac{\mathcal{M}}{EI}\left\{\int_{-d/2}^{d/2} E\,\alpha\,\Delta T\,b\,y\,dy\right\}\right]dx \tag{2.36}$$

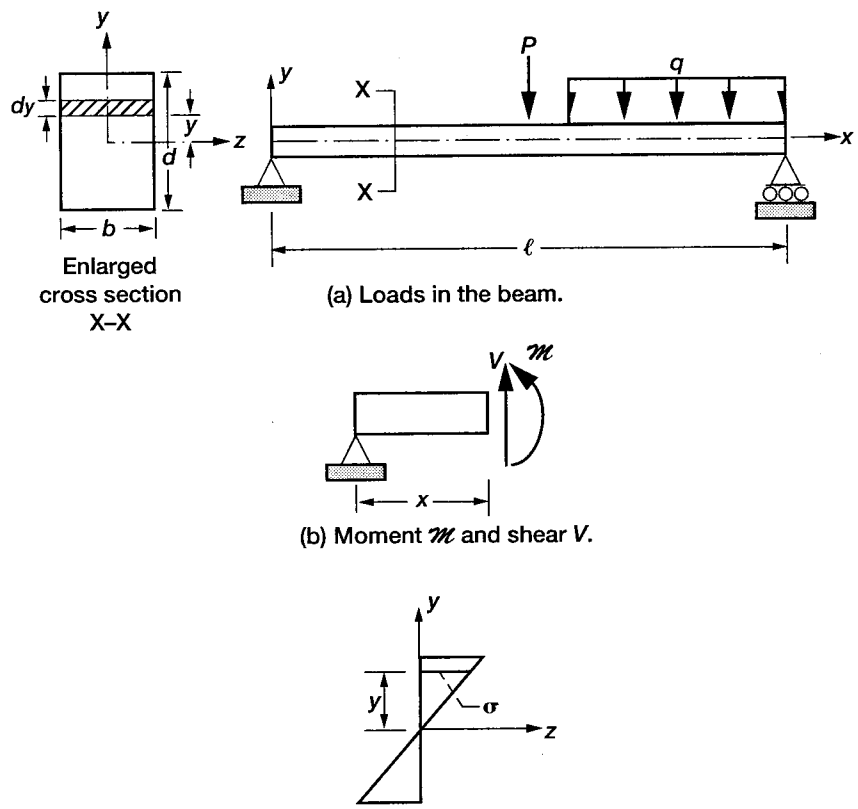

Figure 2.5.—Simply supported beam.

where d, b, and ℓ represent the depth, width, and length of the beam, respectively. Bending moment for a beam shown in figure 2.3(a), which produces compression in the top surface and tension in the bottom surface, gives rise to concave, deformed shape. However, positive temperature at the top surface (and negative temperature at the bottom surface) produce convex deformation in the beam. To account for the two opposite types of deformations, a negative sign is introduced in the strain energy expression in equation (2.36).

The moment of inertia is defined as

$$I = \int_{-d/2}^{d/2} b\, y^2 dy \tag{2.37}$$

Moment (M_T) due to thermal effect can be defined as

$$M_T = \int_{-d/2}^{d/2} E(\alpha\, \Delta T) b\, y\, dy \tag{2.38}$$

The strain energy due to bending can be simplified by substituting equations (2.37) and (2.38) into equation (2.36) as follows:

$$U^b = \int_0^\ell \left\{ \frac{1}{2}\left(\frac{\mathcal{M}^2}{EI}\right) - \left(\frac{\mathcal{M}\, M_T}{EI}\right) \right\} dx \tag{2.39}$$

Deformation β^b due to a bending moment M is obtained as the first derivative of the flexural strain energy given by equation (2.39), with respect to that bending moment M, as

$$\beta^b = \frac{\partial U^b}{\partial M} = \int_0^\ell \left\{ \frac{\mathcal{M}}{EI}\frac{\partial \mathcal{M}}{\partial M} - \frac{M_T}{EI}\frac{\partial \mathcal{M}}{\partial M} \right\} dx \tag{2.40}$$

Likewise, deformation $\beta^{b\text{-}s}$ due to shear force V (which produces bending, thereby contributing to the strain energy) is obtained as the partial derivative of the flexural strain energy with respect to the shear force V as

$$\beta^{b-s} = \frac{\partial U^b}{\partial V} = \int_0^\ell \left\{ \frac{\mathcal{M}}{EI}\frac{\partial \mathcal{M}}{\partial V} - \frac{M_T}{EI}\frac{\partial \mathcal{M}}{\partial V} \right\} dx \tag{2.41}$$

Case 3: Torsion of a uniform circular shaft.—We can obtain a strain energy expression for a uniform circular shaft under torsion by specializing the strain energy formula given by equation (2.30) as follows:

(1) The Young's modulus E should be replaced by the shear modulus G.
(2) The moment of inertia I should be replaced by the polar moment of inertia J.
(3) The normal stress σ should be replaced by the shear stress τ.
(4) The thermal coefficient α is set to zero because, for an isotropic material, the temperature effect does not produce thermal shear strain.

The shear stress formula for the circular shaft shown in figure 2.6 can be written as

$$\frac{\tau}{r} = \frac{\mathcal{T}}{J} \tag{2.42}$$

where τ represents the shear stress at a distance r from the neutral axis and $\mathcal{T}$ is the torque. Torsion as a function of x is represented by ($\mathcal{T} = \mathcal{T}(x)$). Strain energy due to torsion can be written as

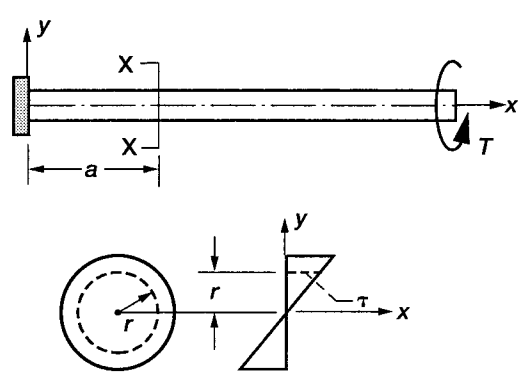

Shear stress distribution ($\tau = \mathcal{T}r/J$) shown on enlarged cross section X–X.

Figure 2.6.—Uniform circular shaft subjected to torsion T.

$$U^s = \frac{1}{2}\int_0^{\ell} \frac{\mathcal{T}^2}{JG}\left\{\int_o^R \frac{2\pi r^3 dr}{J}\right\} dx \tag{2.43}$$

because

$$J = \int 2\pi r^3 dr$$

$$U^s = \frac{1}{2}\int_0^{\ell} \frac{\mathcal{T}^2}{JG} dx \tag{2.44}$$

Deformation due to a torque T can be obtained as the derivative of the strain energy due to torsion with respect to that torque T as

$$\beta^s = \frac{\partial U^s}{\partial T} = \int_0^{\ell} \frac{\mathcal{T}}{JG}\frac{\partial \mathcal{T}}{\partial T} dx \tag{2.45a}$$

For a uniform shaft under constant torsion, the deformation in equation (2.45a) can be specialized for $\mathcal{T} = T$ as

$$\beta^s = \frac{T\ell}{JG} \tag{2.45b}$$

or

$$\beta^s = g_s\, T \tag{2.45c}$$

where g_s is the flexibility coefficient due to torsion and it is defined as

$$g_s = \frac{\ell}{JG} \tag{2.45d}$$

Illustrative Examples

The deformations induced by axial and torsional effects can be calculated by direct substitutions of axial force F, torsional moment T, and temperatures in equations (2.33) and (2.45b), respectively. For flexure, the deformation calculations are also straightforward, but the coupling of bending moment and shear force has to be considered. Flexural deformation calculations are illustrated for the beam shown in figure 2.7. As mentioned earlier, beam response requires two internal unknown forces that can be either (1) two bending moments (M_1, M_2), as shown in figure 2.7(a), or (2) a bending moment (M) and a shear force (V), as shown in figure 2.7(b). We will derive the deformations for both cases. For simplicity, the temperature effect will not be included here, but it is included in the examples given in chapter 3.

Case 1: Two bending moments (M_1, M_2).—For the beam shown in figure 2.7(a), M_1 and M_2 are considered to be the two unknown moments at the ends (A and B) of a beam of length ℓ, respectively. The reactions can be calculated from the equilibrium conditions as

$$R_A = -R_B = \frac{M_2 - M_1}{\ell} \tag{2.46}$$

The moment at any point x in the beam axis can be written as

$$\mathcal{M}(x) = M_1 + \frac{M_2 - M_1}{\ell} x = M_1(1 - \frac{x}{\ell}) + M_2 \frac{x}{\ell} \tag{2.47a}$$

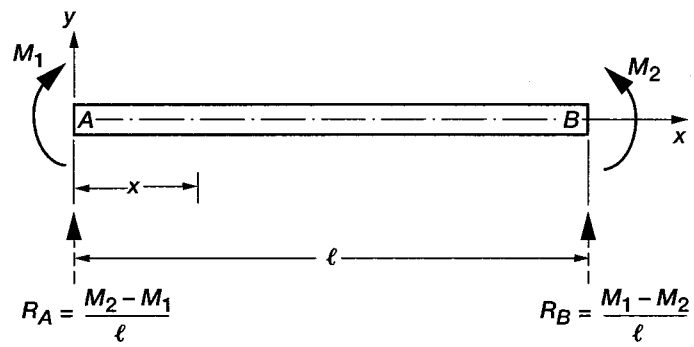

(a) Moments M_1 and M_2 are the force variables. R_A and R_B are the equilibrating reactions that represent shear forces.

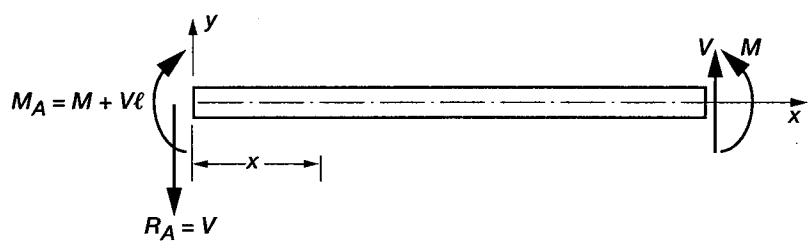

(b) Moment M and shear V are the force variables. M_A and R_A are the equilibrating reactions.

Figure 2.7.—Deformation in a beam.

The derivative of the moment $\mathcal{M}$ with respect to M_1 is

$$\frac{\partial \mathcal{M}(x)}{\partial M_1} = (1 - \frac{x}{\ell}) \tag{2.47b}$$

From equation (2.40), we can write the deformation due to the moment M_1 at location A as

$$\beta_A^b = \frac{\partial U^b}{\partial M_1} = \frac{1}{EI}\int_0^\ell \left\{M_1\left(1 - \frac{x}{\ell}\right) + M_2\frac{x}{\ell}\right\}\left(1 - \frac{x}{\ell}\right)dx \tag{2.48a}$$

or

$$\beta_A^b = \left(\frac{\ell}{EI}\right)\left(\frac{M_1}{3} + \frac{M_2}{6}\right)$$

The deformation β_A^b represents the rotation at location A due to the action of both bending moments (M_1, M_2). Likewise, the deformation at location B can be calculated as

$$\beta_B^b = \frac{\partial U^b}{\partial M_2} = \frac{\ell}{EI}\left(\frac{M_1}{6} + \frac{M_2}{3}\right) \tag{2.48b}$$

The two flexural deformations (β_A^b, β_B^b) can be written in matrix notation as

$$\begin{Bmatrix} \beta_A^b \\ \beta_B^b \end{Bmatrix} = \frac{\ell}{6EI}\begin{bmatrix} 2 & 1 \\ 1 & 2 \end{bmatrix}\begin{Bmatrix} M_1 \\ M_2 \end{Bmatrix} \tag{2.48c}$$

or

$$\{\beta\}^b = [G]^b\{M\} \tag{2.48d}$$

$$[G]^b = \frac{\ell}{6EI}\begin{bmatrix} 2 & 1 \\ 1 & 2 \end{bmatrix} \tag{2.48e}$$

where the (2×2) coefficient matrix $[G]^b$ is referred to as the flexibility matrix for the beam when M_1 and M_2 are considered to be the moment unknowns. In the FDR given by equation (2.48c), the deformations $\left(\beta_A^b, \beta_B^b\right)$ follow the sign convention for associated moments (M_1, M_2), which have opposite directions.

Case 2: Bending moment M and shear force V.—For the beam shown in figure 2.7(b), M and V are considered to be the unknown moment and shear force at location B of the beam of length ℓ. The reactions (R_A, M_A) at location A shown in figure 2.7(b) can be calculated from the equilibrium conditions as

$$R_A = V \qquad \text{and} \qquad M_A = M + V\ell \tag{2.49}$$

The moment at any point x and its derivative with respect to the shear force V can be written as

$$\mathcal{M}(x) = M + V(\ell - x)$$

$$\frac{\partial \mathcal{M}(x)}{\partial V} = (\ell - x) \tag{2.50}$$

The deformation due to the shear force V at location B can be obtained from equation (2.41) as

$$\beta_B^V = \frac{\partial U^b}{\partial V} = \frac{1}{EI}\int_0^\ell \{M + V(\ell - x)\}(\ell - x)\,dx$$

or

$$\beta_B^V = \left(\frac{1}{EI}\right)\left\{\frac{M\ell^2}{2} + \frac{V\ell^3}{3}\right\} \tag{2.51}$$

The deformation β_B^V due to the shear force V represents the displacement at B along the shear force V. Likewise, the deformation due to the bending moment at location B can be calculated as

$$\beta_B^M = \frac{\partial U^b}{\partial M} = \frac{1}{EI}\int_0^\ell \{M + V(\ell - x)\}(1)dx$$

or

$$\beta_B^M = \frac{1}{EI}\left(\frac{V\ell^2}{2} + M\ell\right) \tag{2.52a}$$

The deformation β_B^M represents the rotation at B.

In matrix notation, the two deformations can be written as

$$\begin{Bmatrix} \beta_B^M \\ \beta_B^V \end{Bmatrix} = \left(\frac{1}{EI}\right)\begin{bmatrix} \ell & \ell^2/2 \\ \ell^2/2 & \ell^3/3 \end{bmatrix}\begin{bmatrix} M \\ V \end{bmatrix}$$

or

$$\{\beta\} = [G]^{bs}\{F\} \tag{2.52b}$$

where

$$[G]^{bs} = \frac{1}{EI}\begin{bmatrix} \ell & \ell^2/2 \\ \ell^2/2 & \ell^3/3 \end{bmatrix} \tag{2.52c}$$

The (2×2) coefficient matrix $[G]^{bs}$ is the flexibility matrix of the beam corresponding to the choice of force variables: a moment and a shear force (M, V).

Flexibility Matrix

The relationship between the force variables and the deformation variables is established through the flexibility matrix $[G]$ as

$$\{\beta\} = [G]\{F\} \tag{2.53}$$

The flexibility matrix $[G]$ is a symmetrical matrix of dimension $(n \times n)$, n being the number of force unknowns. For axial force F and torque T, the flexibility matrices become (1×1) matrices defined by equations (2.26b) and (2.45d), respectively. For beam flexure, which involves two force variables, the flexibility is a (2×2) matrix. For the choice of two bending moments (M_1, M_2), the flexibility matrix is defined in equation (2.48e). An alternative flexibility matrix for a bending moment and a shear force is defined in equation (2.52c).

Summary

Analysis of an indeterminate problem requires the coupling of the equilibrium equations and the compatibility conditions. The equilibrium equations can be obtained as a vectorial summation of internal forces and external loads. The compatibility conditions can be calculated in two steps: First, the deformation displacement relations are obtained. Next, displacements are eliminated from the deformation displacement relations to generate the compatibility conditions. Such compatibility conditions expressed in terms of deformations are rewritten in force variables by using the force deformation relations. The force deformation relation can be obtained from strain energy considerations. Together, the equilibrium written in forces and the compatibility, also expressed in terms of forces, represent a sufficient number of equations for determining the internal forces. Displacements, if required, can be back-calculated from forces.

Chapter 3
Solution of Indeterminate Problems

In this chapter, the theory presented in the previous chapter is used to solve a number of indeterminate problems, some with thermal loads and support settling. The basic steps that we will use follow:

Step 0—Solution strategy.

At the initial problem-formulation stage, the sign convention is specified, the force unknowns are identified, and the displacement components are specified. The number of equilibrium equations, compatibility conditions, and degree of indeterminacy are determined.

Step 1—Formulate the equilibrium equations.
Step 2—Derive the deformation displacement relations.
Step 3—Generate the compatibility conditions.
Step 4—Formulate the force deformation relations.
Step 5—Express the compatibility conditions in terms of forces.
Step 6—Couple the equilibrium equations and compatibility conditions to obtain the IFM equations, and solve for the forces.
Step 7—Back-calculate the displacements, if required, from the forces.

The solution of indeterminate problems requires the inversion of a square matrix, which, though trivial with a computer, can become cumbersome for manual calculations. Since the objective here is to master the basic concepts through manual solution, treatment will be confined to simple problems with small matrices. When the calculations become involved, a computer can be used for the solution. The IFM for computer solutions is introduced in chapter 4.

Illustrative Example 1: Thermomechanical Solution for a Fixed Column

A column of length 3ℓ, shown in figure 3.1(a), is restrained at both ends. It is made of steel with a Young's modulus E of 30 000 ksi and a coefficient of thermal expansion α of 6×10^{-6} per °F. The cross-sectional area of its central span ($2A$) is twice that of its boundary spans, which have an area of A. Solve the problem for forces and displacements for $\ell = 10$ in., $A = \text{in.}^2$, and the following three load cases:

Load case 1: A mechanical load ($P_1 = 10$ kips and $P_2 = 20$ kips) applied at the one-third and two-thirds span locations, as shown in figure 3.1(b)
Load case 2: A uniform temperature variation ($\Delta T = 2000$ per °F) along the central one-third span, as shown in figure 3.1(c)
Load case 3: A uniform temperature variation ($\Delta T = 2000$ per °F) along the entire length of the column, as shown in figure 3.1(d)

Step 0—Solution strategy: The coordinate system is marked in figure 3.1(a), with the x-axis along the length of the column. The model for the column, consisting of three axial bars and two nodes, is shown in figure 3.1(e). The problem has three force unknowns (F_1, F_2, F_3), one for each of the three bars, and two unknown displacements (X_1, X_2), one for each node, along the column x-axis. The column is one-degree indeterminate ($r = n - m = 1$) because there are three unknown forces ($n = 3$) but two unknown displacements ($m = 2$). The column requires two EE and one CC for the determination of the three forces. To solve the problem, we follow the seven steps.

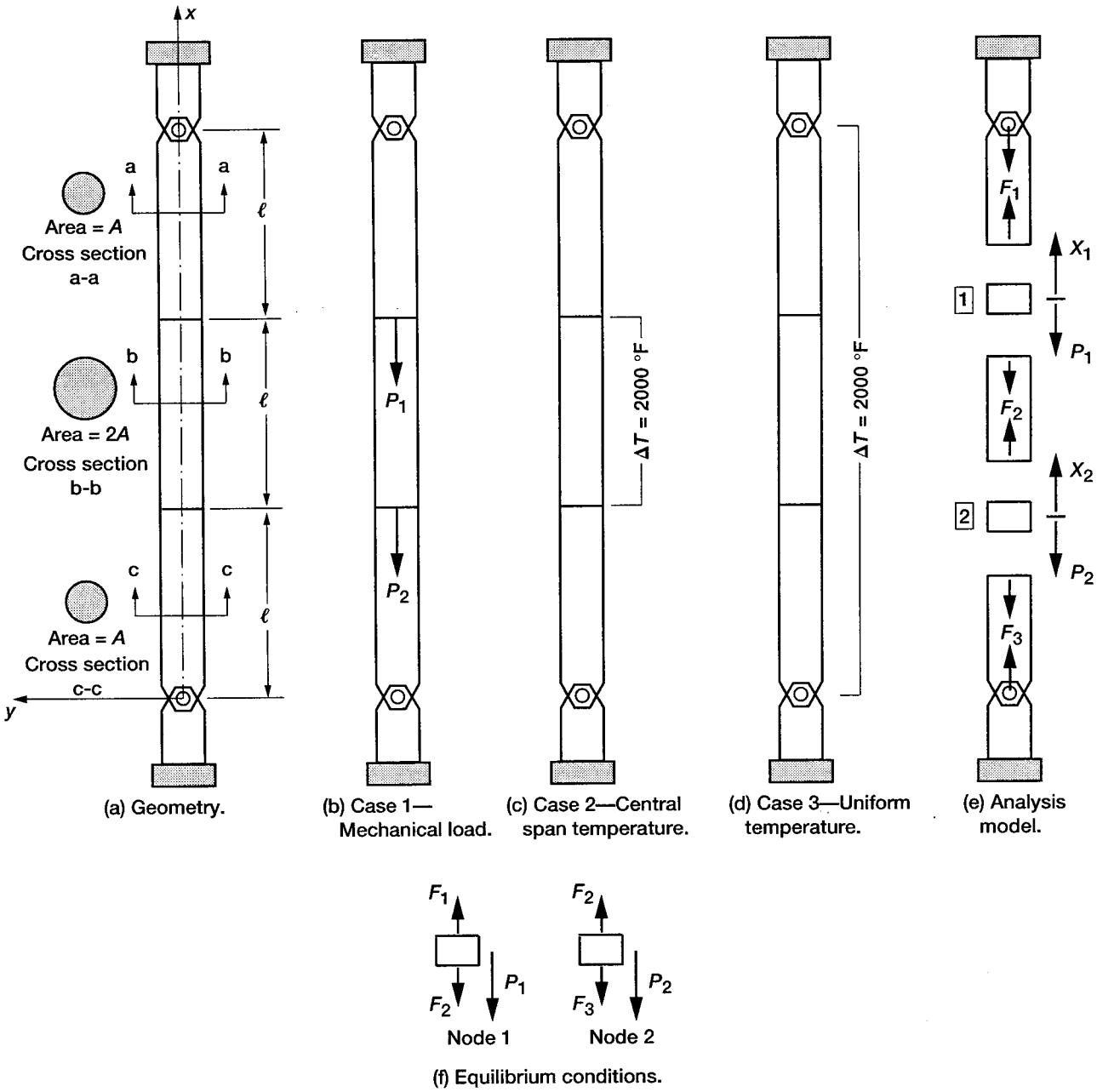

(a) Geometry. (b) Case 1—Mechanical load. (c) Case 2—Central span temperature. (d) Case 3—Uniform temperature. (e) Analysis model.

(f) Equilibrium conditions.

Figure 3.1.—Thermomechanical analysis of a three-span column.

Load case 1: Solution for mechanical loads.—

Step 1—Formulate the equilibrium equations: The two EE of the problem are obtained by summing forces along the displacement directions (X_1, X_2), see figures 3.1(e) and (f).

EE along X_1,
$$F_1 - F_2 - P_1 = 0 \tag{3.1.1a}$$

EE along X_2,
$$F_2 - F_3 - P_2 = 0 \tag{3.1.1b}$$

The EE in matrix notation ($[B]\{F\} = \{P\}$) can be rewritten as

$$\begin{bmatrix} -1 & 1 & 0 \\ 0 & -1 & 1 \end{bmatrix} \begin{Bmatrix} F_1 \\ F_2 \\ F_3 \end{Bmatrix} = \begin{Bmatrix} -P_1 \\ -P_2 \end{Bmatrix} \tag{3.1.1c}$$

Because the two EE represent an insufficient number of equations to determine three unknown forces, one additional CC is required.

Step 2—Derive the deformation displacement relations: The DDR, which are the main ingredients of the CC, are obtained using the EE matrix as ($\{\beta\} = [B]^T\{X\}$). For example, the kth DDR can be obtained as the dot product of the kth column of the EE matrix $[B]$ and the displacement vector $\{X\}$. The DDR for the problem has the following explicit form:

$$\beta_1 = -X_1$$

$$\beta_2 = X_1 - X_2$$

$$\beta_3 = X_2 \tag{3.1.2}$$

Step 3—Generate the compatibility conditions: The single CC ($[C]\{\beta\} = 0$) for the problem is obtained by eliminating two displacements from the three DDR as

$$\beta_1 + \beta_2 + \beta_3 = 0$$

or
$$\begin{bmatrix} 1 & 1 & 1 \end{bmatrix} \begin{Bmatrix} \beta_1 \\ \beta_2 \\ \beta_3 \end{Bmatrix} = 0 \tag{3.1.3a}$$

or
$$[C] = \begin{bmatrix} 1 & 1 & 1 \end{bmatrix}$$

The CC given by equation (3.1.3a) constrains the total elongation of the three bars to zero, which for the problem could have been asserted by observation. Correctness of the CC can be verified from its null property ($[B][C]^T = [0]$). For the problem,

$$\begin{bmatrix} -1 & 1 & 0 \\ 0 & -1 & 1 \end{bmatrix} \begin{bmatrix} 1 \\ 1 \\ 1 \end{bmatrix} = \begin{bmatrix} 0 \\ 0 \end{bmatrix} \tag{3.1.3b}$$

The deformation $\{\beta\}$ in the CC given by equation (3.1.3a) represents the total deformation. The total deformation is the sum of an elastic component (β^e) and a thermal component (β^t) as ($\beta = \beta^e + \beta^t$). For mechanical loads only, $\beta = \beta^e$ because $\beta^t = 0$. The CC given by equation (3.1.3a) is written in terms of deformations, whereas the EE given by equation (3.1.1c) are expressed in forces. To couple the EE and CC, we need to write the latter condition in terms of forces; for this purpose, the force deformation relations are required.

Step 4—Formulate the force deformation relations: The FDR for the three bars for axial force $\left(\beta = \frac{F\ell}{AE}\right)$, given by equation (2.33), are obtained as

Bar 1, $\ell = 10$, $A = 1$; or $$\beta_1 = \left(\frac{F\ell}{AE}\right)_1 = \frac{10F_1}{E}$$

Bar 2, $\ell = 10$, $A = 2$; or $$\beta_2 = \left(\frac{F\ell}{AE}\right)_2 = \frac{5F_2}{E}$$

Bar 3, $\ell = 10$, $A = 1$; or $$\beta_3 = \left(\frac{F\ell}{AE}\right)_3 = \frac{10F_3}{E} \tag{3.1.4}$$

Step 5—Express the compatibility conditions in terms of forces: The CC given by equation (3.1.3a) can be expressed in terms of forces by using equation (3.1.4):

$$\frac{10}{E}\begin{bmatrix}1 & 1/2 & 1\end{bmatrix}\begin{Bmatrix}F_1\\F_2\\F_3\end{Bmatrix} = \{0\} \tag{3.1.5}$$

In the homogeneous CC given by equation (3.1.5), the coefficient ($10/E$) can be set to unity without any consequence.

Step 6—Couple the equilibrium equations and compatibility conditions to obtain the IFM equations, and solve for the forces: The EE given by equation (3.1.1c) are coupled to the CC given by equation (3.1.5) to obtain the IFM equations for the problem:

$$\begin{bmatrix}-1 & 1 & 0\\0 & -1 & 1\\1 & 1/2 & 1\end{bmatrix}\begin{Bmatrix}F_1\\F_2\\F_3\end{Bmatrix} = \begin{Bmatrix}-P_1\\-P_2\\0\end{Bmatrix} \tag{3.1.6}$$

Solving equation (3.1.6) for $P_1 = 10$ kips and $P_2 = 20$ kips yields the forces as

$$\begin{Bmatrix}F_1\\F_2\\F_3\end{Bmatrix}^{\text{case 1}} = \begin{Bmatrix}14\\4\\-16\end{Bmatrix}_{\text{kips}} \tag{3.1.7}$$

Step 7—Back-calculate the displacements, if required, from the forces: The two displacement components can be calculated from the DDR and FDR given by equation (3.1.2) and (3.1.4), respectively. Any two of the three DDR can be used for calculating displacements from forces. We use the first and third deformations in equation (3.1.2) to calculate the two displacements as follows:

$$X_1 = -\beta_1 = -\frac{10F_1}{E} = -4.67\times10^{-3} \text{ in.}$$

$$X_2 = \beta_3 = \frac{10F_3}{E} = -5.33\times10^{-3} \text{ in.} \tag{3.1.8}$$

Because of the compatibility compliance, the satisfaction of the remaining DDR ($\beta_2 = X_1 - X_2$) can be verified.

$$\beta_2 = \frac{5F_2}{E} = 0.667\times10^{-3} \text{ in.}$$

and

$$X_1 - X_2 = 0.667\times10^{-3} \text{ in.} \tag{3.1.9a}$$

Thus,

$$\beta_2 = X_1 - X_2 \tag{3.1.9b}$$

The displacements (X_1, X_2) are along the negative x-axis, or along the loads (P_1, P_2), as expected.

Load case 2: Central span thermal load.—Solution for thermal effect follows the procedure for mechanical loads with nontrivial $\{\delta R\}$ in CC. Both thermal and mechanical deformations have to be included in the definition of total deformation. Deformations including thermal effects (case 2, when the temperature increases in the midspan by 2000 °F) are as follows:

Thermal deformations,

$$\beta_1^t = 0 \qquad \beta_2^t = \alpha\Delta T\,\ell = 0.12 \qquad \beta_3^t = 0 \tag{3.1.10}$$

or

$$\left\{\beta^t\right\} = \begin{Bmatrix} 0 \\ 0.12 \\ 0 \end{Bmatrix}$$

Total deformations ($\beta = \beta^e + \beta^t$),

$$\beta_1^{\text{case 2}} = \left(\frac{F\ell}{AE}\right)_1 = \frac{10\,F_1}{E}$$

$$\beta_2^{\text{case 2}} = \frac{5F_2}{E} + 0.12$$

$$\beta_3^{\text{case 2}} = \frac{10\,F_3}{E} \tag{3.1.11}$$

The effective initial deformation vector can be calculated as

$$\{\delta R\} = -[C]\{\beta^t\}$$

$$= -[1 \quad 1 \quad 1]\begin{Bmatrix} 0 \\ 0.12 \\ 0 \end{Bmatrix} = \{-0.12\} \tag{3.1.12}$$

The CC given by equation (3.1.5) can be rewritten incorporating the thermal effect $\{\delta R\}$ as

$$\frac{10}{E}[1 \quad 1/2 \quad 1]\begin{Bmatrix} F_1 \\ F_2 \\ F_3 \end{Bmatrix} = \{-0.12\} \tag{3.1.13}$$

The left side of equation (3.1.13) is identical to equation (3.1.5), but its right side is replaced by the equivalent thermal load ($\delta R = -[C]\{\beta^t\}$). Earlier in the homogenous CC in equation (3.1.5), the coefficient ($10/E$) was set to unity without any consequence. However, in the presence of thermal loads, the coefficient has to be retained since the CC in equation (3.1.13) is not homogeneous. The solution for thermal load, case 2, is obtained by incorporating the following changes into equation (3.1.6):

$P_1 = P_2 = 0$ since there are no mechanical loads.

$$\left(\frac{E}{10}\{\delta R\}\right) = -\frac{0.12E}{10} = -360 \tag{3.1.14}$$

$$\begin{bmatrix} -1 & 1 & 0 \\ 0 & -1 & 1 \\ 1 & 1/2 & 1 \end{bmatrix}\begin{Bmatrix} F_1 \\ F_2 \\ F_3 \end{Bmatrix} = \begin{Bmatrix} 0 \\ 0 \\ -360 \end{Bmatrix}$$

or

$$\begin{Bmatrix} F_1 \\ F_2 \\ F_3 \end{Bmatrix}^{\text{case 2}} = -\begin{Bmatrix} 144 \\ 144 \\ 144 \end{Bmatrix}_{\text{kips}} \tag{3.1.15}$$

Step 7—Back-calculate the displacements, if required, from the deformation displacement relations: Displacements are back-calculated from any two of the three DDR as

$$X_1 = -\beta_1 = -\frac{10F_1}{E} = 0.048 \text{ in.}$$

$$X_2 = \beta_3 = \frac{10F_3}{E} = -0.048 \text{ in.} \tag{3.1.16}$$

In the displacement calculation, thermal strain is bypassed because deformation in the first and third bars, β_1 and β_3, are not explicitly affected when the central span temperature is increased.

Let us calculate deformation β_2 by using the FDR (eq. (3.1.11)) as well as the DDR (eq. (3.1.2)).
From the DDR equation (eq. (3.1.2)),

$$\beta_2 = X_1 - X_2 \qquad \text{or} \qquad \beta_2 = 0.096 \tag{3.1.17a}$$

From the FDR equation (eq. (3.1.11)),

$$\beta_2 = \frac{5F_2}{E} + 0.12 = -0.024 + 0.12 = 0.096 \tag{3.1.17b}$$

Deformation (β_2) calculated from both the DDR and FDR agreed, as expected. The central span expands because of an increase in the temperature, resulting in a positive displacement (X_1) at node 1 and a negative displacement (X_2) at node 2. Because of symmetry, $|X_1| = |X_2|$.

Load case 3: Uniform thermal load.—Uniform thermal increase ($\Delta T = 2000$ °F), case 3, can be solved by following the procedure shown for thermal load, case 2. Deformations due to thermal effects, case 3, are as follows:

$$\beta_1^{\text{case 3}} = \frac{10\,F_1}{E} + (\alpha \Delta T \ell)_1 = \frac{10\,F_1}{E} + 0.12$$

$$\beta_2^{\text{case 3}} = \frac{5F_2}{E} + 0.12$$

$$\beta_3^{\text{case 3}} = \frac{10\,F_3}{E} + 0.12 \tag{3.1.18}$$

The CC and the effective initial deformation vector $\{\delta R\}$ are calculated as follows:

$$\frac{10}{E}\begin{bmatrix}1 & 1/2 & 1\end{bmatrix}\begin{Bmatrix}F_1\\F_2\\F_3\end{Bmatrix} = -0.36 \tag{3.1.19}$$

The IFM equation (3.1.15) is modified by incorporating δR for case 3 to obtain

$$\begin{bmatrix}-1 & 1 & 0\\ 0 & -1 & 1\\ 1 & 1/2 & 1\end{bmatrix}\begin{Bmatrix}F_1\\F_2\\F_3\end{Bmatrix} = \begin{Bmatrix}0\\0\\-1080\end{Bmatrix}$$

or

$$\begin{Bmatrix}F_1\\F_2\\F_3\end{Bmatrix}^{\text{case 3}} = -\begin{Bmatrix}432\\432\\432\end{Bmatrix}_{\text{kips}} \tag{3.1.20}$$

Step 7—Back-calculate the displacements, if required, from the deformation displacement relations: Displacements are calculated from any two of the three DDR as:

$$X_1 = -\beta_1 = -\left(\frac{10F_1}{E} + 0.12\right) = 0.024$$

$$X_2 = \beta_3 = -0.024 \tag{3.1.21}$$

The uniform thermal expansion induces a positive displacement (X_1) at node 1 and a negative displacement (X_2) at node 2.

Simultaneous solution.—The thermomechanical response for combined thermal and mechanical loads can be obtained by superposing mechanical and thermal solutions. An efficient alternative, however, is to combine both mechanical and thermal loads together in the calculation of forces. In this example, for clarity, mechanical and thermal loads are treated separately. The solution procedure illustrated for this simple example is quite general and applies equally well to other problems, irrespective of their complexity.

Proration rule.—For mechanical loads only, when the force vector is multiplied by a constant factor, the displacements are prorated by the same factor, and vice versa. For thermal loads, however, this constant proration rule need not apply. Take, for example, the forces given by the thermal loads for cases 2 and 3, which differ by a factor of 3:

$$3\begin{Bmatrix} F_1 \\ F_2 \\ F_3 \end{Bmatrix}^{\text{case 2}} = \begin{Bmatrix} F_1 \\ F_2 \\ F_3 \end{Bmatrix}^{\text{case 3}} = -\begin{Bmatrix} 432 \\ 432 \\ 432 \end{Bmatrix} \tag{3.1.22}$$

However, for the two thermal load cases, the displacements do not differ by a factor of 3:

$$\left\{3\begin{Bmatrix} X_1 \\ X_2 \end{Bmatrix}^{\text{case 2}} = \begin{Bmatrix} 0.144 \\ -0.144 \end{Bmatrix}\right\} \neq \left\{\begin{Bmatrix} X_1 \\ X_2 \end{Bmatrix}^{\text{case 3}} = \begin{Bmatrix} 0.024 \\ -0.024 \end{Bmatrix}\right\} \tag{3.1.23}$$

Illustrative Example 2: Propped Cantilevered Beam Under a Uniform Load

A propped cantilevered beam of length ℓ is subjected to a uniformly distributed load of intensity q per unit length as shown in figure 3.2(a). The beam, which is made of steel with a Young's modulus E of 30 000 ksi, has a depth d of 2 in. and a width b of 1 in. Solve the problem for forces and displacements.

Step 0—Solution strategy: For this problem, conventional coordinate axes (x, y) and the origin at A are defined in figure 3.2(a). In addition, the abscissa ($\bar{x}$)with its origin at B is defined because this choice reduces some calculations. We solve the problem by considering three reactions as unknowns ($n = 3$). These are the moment M and shear force V at the fixed support and the shear force R at the hinged support (see fig. 3.2(b)). For the beam, two overall equilibrium equations—one rotational EE and one transverse EE—can be written ($m = 2$). The dual, or displacement, variables associated with the rotational and transverse EE are θ and ν, respectively. The problem is one-degree indeterminate because $r = n - m = 1$. The displacement function $w(x)$ is calculated because of the distributed nature of the load q. Since the beam is uniform, the solution is obtained in terms of EI, where I is the beam's moment of inertia.

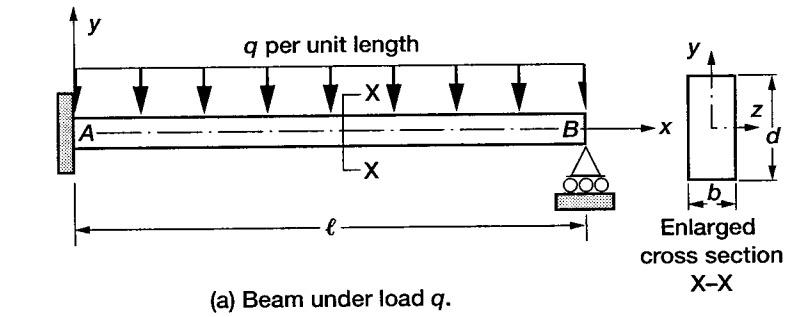

(a) Beam under load q.

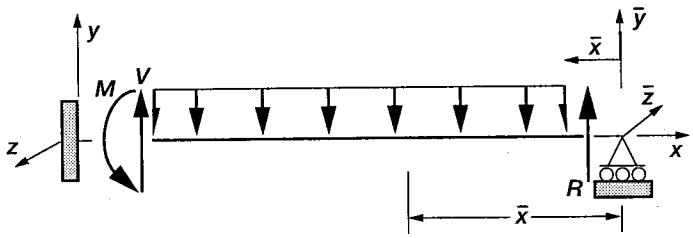

(b) Forces acting in the beam.

Figure 3.2.—Propped beam under uniform load.

Step 1—Formulate the equilibrium equations: Summation of the moment and shear force provides two EE in terms of three unknown forces (V, R, M). Rotational or moment equilibrium at the hinge point B yields the first EE.

$$M - V\ell + \frac{q\ell^2}{2} = 0 \tag{3.2.1}$$

The force equilibrium along the transverse direction is the second EE:

$$V + R - q\ell = 0 \tag{3.2.2}$$

The two EE in terms of the three reactions (V, R, M) can be written in matrix notation as

$$\begin{bmatrix} \ell & 0 & -1 \\ -1 & -1 & 0 \end{bmatrix} \begin{Bmatrix} V \\ R \\ M \end{Bmatrix} = \begin{Bmatrix} \dfrac{q\ell^2}{2} \\ -q\ell \end{Bmatrix} \tag{3.2.3}$$

The equilibrium equations are one-degree indeterminate because three unknown reactions (V, R, M) are expressed in terms of two equations. One compatibility condition is required to solve the problem.

Step 2—Derive the deformation displacement relations: The DDR ($\{\beta\} = [B]^T\{X\}$) have the following form:

$$\begin{Bmatrix} \beta_v \\ \beta_r \\ \beta_m \end{Bmatrix} = \begin{bmatrix} \ell & -1 \\ 0 & -1 \\ -1 & 0 \end{bmatrix} \begin{Bmatrix} \theta \\ v \end{Bmatrix} \tag{3.2.4}$$

In the DDR, the deformations (β_v, β_r, β_m) correspond to the reactions (V, M, R), respectively. The displacements (θ, v) are the dual variables of the moment and transverse equilibrium equations, respectively.

Step 3—Generate the compatibility conditions: The single compatibility condition is obtained by eliminating the two displacements (θ, v) from the three DDR:

$$\begin{bmatrix} 1 & -1 & \ell \end{bmatrix} \begin{Bmatrix} \beta_v \\ \beta_r \\ \beta_m \end{Bmatrix} = \{0\} \tag{3.2.5}$$

The correctness of the CC can be verified from its null property ($[B][C]^T=[0]$):

$$\begin{bmatrix} \ell & 0 & -1 \\ -1 & -1 & 0 \end{bmatrix} \begin{bmatrix} 1 \\ -1 \\ \ell \end{bmatrix} = \begin{bmatrix} 0 \\ 0 \end{bmatrix} \tag{3.2.6}$$

Step 4—Formulate the force deformation relations: We can express the compatibility conditions ($[C]\{\beta\} = 0$) in terms of reactions by using the FDR, which can be obtained as the derivatives of the strain energy U as given by equation (2.40).

$$\beta_v = \frac{\partial U}{\partial V} = \int_0^\ell \frac{\mathcal{M}}{EI} \frac{\partial \mathcal{M}}{\partial V} dx$$

$$\beta_r = \frac{\partial U}{\partial R} = \int_0^\ell \frac{\mathcal{M}}{EI} \frac{\partial \mathcal{M}}{\partial R} dx$$

$$\beta_m = \frac{\partial U}{\partial M} = \int_0^\ell \frac{\mathcal{M}}{EI} \frac{\partial \mathcal{M}}{\partial M} dx \tag{3.2.7}$$

where the strain energy U for the beam can be written in terms of moment $\mathcal{M}$ as (see eq. (2.39))

$$U = \int_0^\ell \frac{\mathcal{M}^2}{2EI} dx \tag{3.2.8}$$

For strain energy calculations, either point A or B (see fig. 3.2(b)) can be selected as the origin without any adverse consequence. When point A is selected as the origin, the moment ($\mathcal{M}(x)$) has to be written in terms of two unknowns (M and V). However, when B is selected as the origin with an axis $\bar{x}$ from B to A as shown in figure 3.2(b), the moment $(\mathcal{M}(\bar{x}))$ can be written in terms of a single reaction unknown (R). To reduce the number of calculations, we select B as the origin with axis $\bar{x}$. The reader, however, could select the conventional axis x and arrive at the same results.

$$\mathcal{M}(\bar{x}) = R\bar{x} - \frac{q\bar{x}^2}{2} \tag{3.2.9}$$

The derivatives are $\partial\mathcal{M}/\partial V = 0$, $\partial M/\partial R = \bar{x}$, and $\partial\mathcal{M}/\partial M = 0$. Thus, the deformation $\beta_v = \beta_m = 0$. The deformation β_r can be calculated as

$$\beta_r = \frac{1}{EI} \int_0^\ell \left(R\bar{x} - \frac{q\bar{x}^2}{2} \right) (\bar{x})\, d\bar{x} \tag{3.2.10}$$

Upon integration, the deformation is obtained as

$$\beta_r = \frac{1}{EI}\left(\frac{R\ell^3}{3} - \frac{q\ell^4}{8}\right) \tag{3.2.11}$$

Step 5—Express the compatibility conditions in terms of forces: In terms of force variables, the compatibility condition can be written as

$$\begin{bmatrix} 0 & \frac{\ell^3}{3EI} & 0 \end{bmatrix} \begin{Bmatrix} V \\ R \\ M \end{Bmatrix} = \begin{Bmatrix} \frac{q\ell^4}{8EI} \end{Bmatrix}$$

or

$$\begin{bmatrix} 0 & 1 & 0 \end{bmatrix} \begin{Bmatrix} V \\ R \\ M \end{Bmatrix} = \frac{3q\ell}{8} \tag{3.2.12}$$

Notice that the CC, which is an uncoupled equation, is nonhomogeneous because of the distributed nature of load q.

Step 6—Couple the equilibrium equations and compatibility conditions to obtain the IFM equations, and solve for the forces: The compatibility condition can be coupled to the equilibrium equations to obtain three equations in terms of three unknown force variables:

$$\begin{bmatrix} \ell & 0 & -1 \\ -1 & -1 & 0 \\ 0 & 1 & 0 \end{bmatrix} \begin{Bmatrix} V \\ R \\ M \end{Bmatrix} = \begin{Bmatrix} \frac{q\ell^2}{2} \\ -q\ell \\ \frac{3q\ell}{8} \end{Bmatrix} \tag{3.2.13}$$

Solution of the equation yields the three reactions as

$$\begin{Bmatrix} V \\ R \\ M \end{Bmatrix} = \begin{Bmatrix} \frac{5q\ell}{8} \\ \frac{3q\ell}{8} \\ \frac{q\ell^2}{8} \end{Bmatrix} \tag{3.2.14}$$

The moment function $\mathcal{M}(\bar{x})$ given by equation (3.2.9) can be rewritten in terms of load q as

$$\mathcal{M}(\bar{x}) = \frac{3q\ell\bar{x}}{8} - \frac{q\bar{x}^2}{2}$$

Step 7—Back-calculate the displacements, if required, from the forces: Because the load is distributed along the span of the beam, the transverse displacement is a function of $\bar{x}$; that is, $w(\bar{x})$. The moment curvature relation $(\kappa(\bar{x}))$ has to be integrated to determine the displacement function $w(\bar{x})$.

Elementary Derivation of the Moment Curvature Relationship

The moment curvature relationship derived in standard strength of materials textbooks is reviewed for completeness. For a beam oriented along the x-axis and with the transverse displacement $w(x)$, the curvature defined in elementary analytical geometry textbooks can be written as

$$\kappa = \frac{\dfrac{d^2 w}{dx^2}}{\left[1+\left(\dfrac{dw}{dx}\right)^2\right]^{3/2}} \tag{3.2.15}$$

where $\rho = 1/|\kappa|$ is the radius of curvature. In simple beam analysis, it is assumed that the square of the rotation $(dw/dx)^2$ is much smaller than unity; thus, the denominator is set to unity, and the curvature κ simplifies to

$$\kappa = \frac{d^2 w}{dx^2} \tag{3.2.16}$$

Curvature is the deformation associated with the bending moment $\mathcal{M}$. Their product represents strain energy U. The strain energy due to flexure can be written as (see eq. (2.39))

$$U^b = \frac{1}{2}\int_0^\ell \mathcal{M}\,\kappa\,dx = \frac{1}{2}\int_0^\ell \frac{\mathcal{M}^2}{EI}\,dx \tag{3.2.17a}$$

or

$$\frac{1}{2}\int_0^\ell \left(\kappa - \frac{\mathcal{M}}{EI}\right)\mathcal{M}\,dx = 0 \tag{3.2.17b}$$

Since the moment function ($\mathcal{M}$) is arbitrary and is not a null function,

$$\kappa = \frac{\mathcal{M}}{EI} = \frac{d^2 w}{dx^2} \tag{3.2.18}$$

This simplistic derivation is sufficient because the process provides the moment curvature relationship. For the problem, the moment curvature relation can be written as

$$\kappa(\bar{x}) = \frac{d^2 w(\bar{x})}{d\bar{x}^2} = \frac{\mathcal{M}}{EI} = \left(\frac{1}{EI}\right)\left(\frac{3q\ell\bar{x}}{8} - \frac{q\bar{x}^2}{2}\right) \tag{3.2.19}$$

Integrating the moment curvature relation yields the displacement function:

$$w(\bar{x}) = \frac{1}{EI}\left(\frac{q\ell\bar{x}^3}{16} - \frac{q\bar{x}^4}{24} + c_1\bar{x} + c_2\right) \tag{3.2.20}$$

The integration constants in the displacement function can be determined from the kinematic displacement boundary conditions, which are essential for the stability of the structure. The number of kinematic conditions N_{kbc} can be calculated as the difference between the total number of displacement boundary conditions N_{tbc} and the number of compatibility conditions r:

$$N_{kbc} = N_{tbc} - r \tag{3.2.21}$$

For this problem, $N_{tbc} = 3$, $r = 1$, and $N_{kbc} = 2$. The three displacement boundary conditions are

$$BC-1 \quad \Rightarrow \quad w(\bar{x}) = 0 \quad \text{at} \quad \bar{x} = 0$$

$$BC-2 \quad \Rightarrow \quad w(\bar{x}) = 0 \quad \text{at} \quad \bar{x} = \ell$$

$$BC-3 \quad \Rightarrow \quad \frac{dw(\bar{x})}{d\bar{x}} = 0 \quad \text{at} \quad \bar{x} = \ell \tag{3.2.22}$$

Any two of the three displacement boundary conditions are sufficient for determining the two constants of integration (c_1, c_2) in equation (3.2.20). The boundary conditions (BC–1) and (BC–2) are used to determine the constants, as follows:

$$c_2 = 0$$

$$c_1 = -\frac{q\ell^3}{48} \tag{3.2.23}$$

The displacement function has the following explicit form:

$$w(\bar{x}) = \frac{1}{EI}\left(\frac{q\ell\bar{x}^3}{16} - \frac{q\bar{x}^4}{24} - \frac{q\ell^3\bar{x}}{48}\right) \tag{3.2.24}$$

The reader can verify the compliance of the slope boundary condition (BC–3) at the fixed end.

The maximum displacement can be determined from principles of calculus as

$$w_{\max} = -\frac{0.0054q\ell^4}{EI} \quad \text{at} \quad \bar{x} = 0.4215\ell \tag{3.2.25}$$

where w is considered to be positive along the y-axis. The load q, however, is along the negative axis, which is also the direction of displacement; or displacement is along the negative y-axis.

Maximum slope, which occurs at the propped end at $\bar{x} = 0$, is

$$\theta_{\max} = \frac{-q\ell^3}{48\,EI} \tag{3.2.26}$$

The slope $\left(\frac{dw}{d\bar{x}} = -\frac{dw}{dx}\right)$ is positive along the positive z-axis (which also represents the negative $\bar{z}$– axis). Likewise, the maximum value of the bending moment is

$$M_{\max} = \frac{9q\ell^2}{128} \quad \text{at} \quad \bar{x} = \frac{3\ell}{8} \tag{3.2.27}$$

Illustrative Example 3: Two-Span Beam Under a Uniform Load

A two-span beam of length 2ℓ is subjected to a uniformly distributed load of intensity q per unit length, as shown in figure 3.3(a). The beam, which is made of steel, has a Young's modulus E of 30 000 ksi, a depth d of 2 in. and a width b of 1 in. Solve the problem for forces and displacements.

Step 0—Solution strategy: For the problem, the coordinate system (x, y) is defined with its origin at A (see fig. 3.3(a)). Also, to reduce calculation, another abscissa $(\bar{x})$ is defined with its origin at C, see figure 3.3(b). The problem is solved by considering three reactions (R_1, R_2, R_3) as the unknowns, or $n = 3$ (see fig. 3.3(b)). Since the beam is uniform, the solution is obtained in terms of EI, where I is the moment of inertia. The three unknown reactions can be reduced to two because of symmetry $(R_3 = R_1)$, which reduces to $n = 2$. Because the condition of symmetry is used, both rotational and transverse equilibrium yield the same single, independent EE, or $m = 1$. The single displacement unknown considered is v along the y-direction. The problem is one-degree indeterminate $(r = n - m = 1)$. The seven-step procedure is followed to solve the problem.

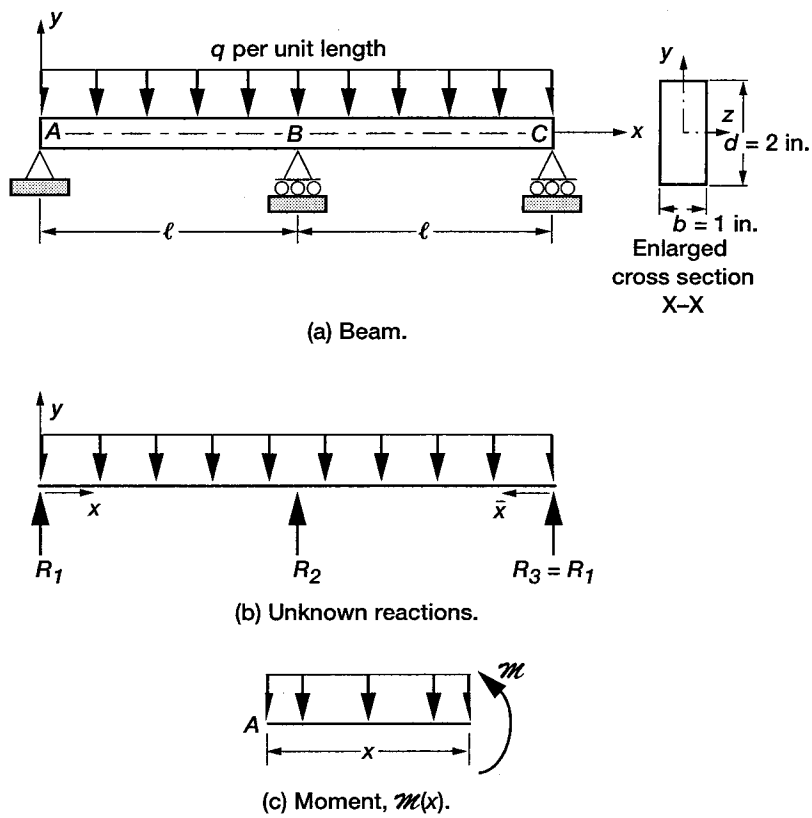

Figure 3.3.—Two-span beam under uniform load.

Step 1—Formulate the equilibrium equations: Since the condition of symmetry has already been used, only the transverse equilibrium is considered:

$$2R_1 + R_2 - 2q\ell = 0 \tag{3.3.1}$$

The reader can verify that the moment equilibrium condition does not produce any additional independent EE. In matrix notation, the single EE can be written as

$$\begin{bmatrix} -2 & -1 \end{bmatrix} \begin{Bmatrix} R_1 \\ R_2 \end{Bmatrix} = \{-2q\ell\} \tag{3.3.2}$$

The equilibrium equation is one-degree indeterminate because two unknown reactions (R_1, R_2) are expressed by a single EE. One compatibility condition is required to solve the problem.

Step 2—Derive the deformation displacement relations: The DDR ($\{\beta\} = [B]^T\{X\}$) has the following form:

$$\beta_1 = -2v$$

$$\beta_2 = -v \tag{3.3.3}$$

In the DDR, the deformations (β_1, β_2) correspond to the reactions (R_1, R_2), respectively. The displacement v along the y-direction is the dual variable associated with the transverse EE.

Step 3—Generate the compatibility conditions: The single compatibility condition is obtained by eliminating the single displacement v from the two DDR:

$$\begin{bmatrix} 1 & -2 \end{bmatrix} \begin{Bmatrix} \beta_1 \\ \beta_2 \end{Bmatrix} = \{0\} \tag{3.3.4}$$

The correctness of the CC can be verified from its null property ($[B][C]^T=0$).

$$\begin{bmatrix} -2 & -1 \end{bmatrix} \begin{bmatrix} 1 \\ -2 \end{bmatrix} = [0] \tag{3.3.5}$$

Step 4—Formulate the force deformation relations: The force deformation relations can be obtained as the derivatives of the strain energy U as

$$\beta_1 = \frac{\partial U}{\partial R_1} = \frac{2}{EI}\int_0^{\ell} \mathcal{M} \frac{\partial \mathcal{M}}{\partial R_1} dx$$

$$\beta_2 = \frac{\partial U}{\partial R_2} = \frac{2}{EI}\int_0^{\ell} \mathcal{M} \frac{\partial \mathcal{M}}{\partial R_2} dx \tag{3.3.6}$$

The strain energy function U for the beam has the following familiar form:

$$U = 2\int_0^{\ell} \frac{\mathcal{M}^2}{2EI} dx \tag{3.3.7}$$

Because of the symmetry condition, the coefficient 2 and the limits of the integral ($0 - \ell$) for a single span are used in equations (3.3.6) and (3.3.7). The strain energy stored in the structure is twice that of each span. For the calculation of the strain energy, we can select either point A or C as the origin without any consequence. The moment at any point x from origin A can be written as (see fig. 3.3(b))

$$\mathcal{M}(x) = R_1 x - \frac{qx^2}{2} \tag{3.3.8}$$

The derivatives are $\partial\mathcal{M}/\partial R_1 = x$ and $\partial\mathcal{M}/\partial R_2 = 0$. Thus, the deformations ($\beta_2 = 0$) and (β_1) from equation (3.3.6) can be written as

$$\beta_1 = \frac{2}{EI}\int_0^{\ell}\left(R_1 x - \frac{qx^2}{2}\right)(x)\,dx$$

or

$$\beta_1 = \frac{2}{EI}\left(\frac{R_1\ell^3}{3} - \frac{q\ell^4}{8}\right) \tag{3.3.9}$$

Step 5—Express the compatibility conditions in terms of forces: The compatibility condition is obtained in terms of reactions by eliminating deformations between equations (3.3.4) and (3.39) as

$$\frac{2}{EI}\begin{bmatrix}\frac{\ell^3}{3} & 0\end{bmatrix}\begin{Bmatrix}R_1\\R_2\end{Bmatrix} = \begin{Bmatrix}\frac{q\ell^4}{4EI}\end{Bmatrix} \tag{3.3.10}$$

Notice that the CC, which is an uncoupled equation, is nonhomogeneous because of the distributed nature of load q.

Step 6—Couple the equilibrium equations and compatibility conditions to obtain the IFM equations, and solve for the forces: The compatibility conditions can be added to the EE to obtain two equations in terms of two unknown reactions as follows:

$$\begin{bmatrix}-2 & -1\\ 1/3 & 0\end{bmatrix}\begin{Bmatrix}R_1\\R_2\end{Bmatrix} = \begin{Bmatrix}-2q\ell\\ \frac{q\ell}{8}\end{Bmatrix} \tag{3.3.11}$$

Solution of the equation yields the two reactions as

$$\begin{Bmatrix}R_1\\R_2\end{Bmatrix} = \begin{Bmatrix}\frac{3q\ell}{8}\\ \frac{5q\ell}{4}\end{Bmatrix} \tag{3.3.12a}$$

From symmetry,

$$R_3 = R_1 = \frac{3q\ell}{8} \tag{3.3.12b}$$

The moment function $\mathcal{M}(x)$ for the first span AB can be written as

$$\mathcal{M}(x) = \frac{3q\ell x}{8} - \frac{qx^2}{2} \tag{3.3.13}$$

The moment at the central support B is obtained for $x = \ell$ as

$$M_B = -\frac{q\ell^2}{8} \tag{3.3.14}$$

Step 7—Back-calculate the displacements, if required, from the forces: Because the load is distributed along the span of the beam, the moment curvature relations (derived in Illustrative Example 2) can be integrated to obtain the displacement function $w(x)$. For the first span AB,

$$\kappa(x) = \frac{d^2 w(x)}{dx^2} = \frac{\mathcal{M}}{EI} \tag{3.3.15}$$

The displacement function $w(x)$ for the first span is obtained by integrating the moment curvatures relations as

$$\frac{d^2 w(x)}{dx} = \frac{1}{EI}\left(\frac{3q\ell x}{8} - \frac{qx^2}{2}\right) \tag{3.3.16}$$

Integration yields the displacement function as

$$w(x) = \frac{1}{EI}\left(\frac{q\ell x^3}{16} - \frac{qx^4}{24} + c_1 x + c_2\right) \tag{3.3.17}$$

For the problem, the three displacement boundary conditions are

$$\begin{aligned} BC-1 \Rightarrow \quad & w(x) = 0 \quad \text{at} \quad x = 0 \\ BC-2 \Rightarrow \quad & w(x) = 0 \quad \text{at} \quad x = \ell \\ BC-3 \Rightarrow \quad & w(x) = 0 \quad \text{at} \quad x = 2\ell \end{aligned} \tag{3.3.18}$$

For span AB, the boundary conditions BC–1 and BC–2 are used to determine the two constants as follows:

$$\begin{aligned} c_2 &= 0 \\ c_1 &= -\frac{q\ell^3}{48} \end{aligned} \tag{3.3.19}$$

The displacement function for span AB has the following explicit form:

$$w(x) = \frac{1}{EI}\left(\frac{q\ell x^3}{16} - \frac{qx^4}{24} - \frac{q\ell^3 x}{48}\right) \tag{3.3.20}$$

Slope,

$$\frac{dw(x)}{dx} = \frac{1}{EI}\left(\frac{3q\ell x^2}{16} - \frac{qx^3}{6} - \frac{q\ell^3}{48}\right)$$

Slope at $x = 0$,

$$\left.\frac{dw}{dx}\right|_{x=0} = -\frac{q\ell^3}{48EI}$$

Slope at $x = \ell$,

$$\left.\frac{dw}{dx}\right|_{x=\ell} = 0 \tag{3.3.21}$$

Because of symmetry, the displacement function given by equation (3.3.19) can be used for the second span by using the alternative abscissa $(\bar{x})$ as shown in figure 3.3(b).

Illustrative Example 4: Continuous Beam With Support Settling

A two-span, continuous beam that is made of steel with a Young's modulus E of 30 000 ksi is subjected to a load P at the center of its second span as shown in figure 3.4a. The moment of inertia of the uniform beam is $I = 100$ in.^{4} Solve the problem for forces and displacements for the following two load cases:

Load case 1: Mechanical load P only
Load case 2: Settling of the central support, $\Delta = 0.25$ in.

Load case 1: Solution for a mechanical load.—
Step 0—Solution strategy: The coordinates (x, y) with origin at A are shown in figure 3.4(a). The beam is modeled into three spans. The free-body diagram of the beam is shown in figure 3.4(b). Each beam span has two moment unknowns; thus the structure has six unknown moments $(M_1, M_2, \ldots, M_6)$, or $n = 6$. The problem has five unknown

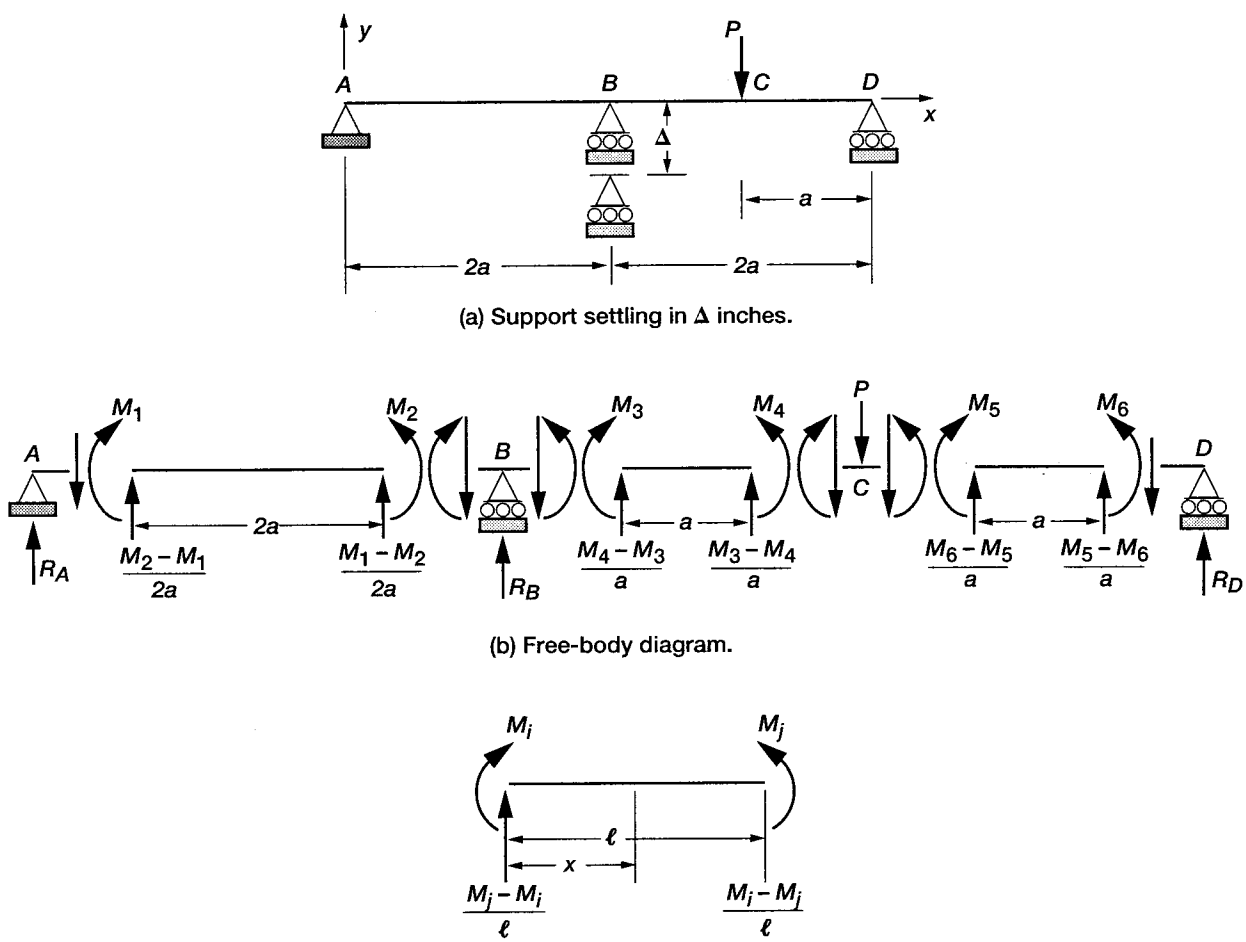

(a) Support settling in Δ inches.

(b) Free-body diagram.

(c) Moments used to derive the force deformation relations.

Figure 3.4.—Two-span beam with setting support.

displacements, or $m = 5$. These are the slope θ_1 at support A, slope θ_2 at support B, displacement v under load at C, rotation θ_3 at C, and rotation θ_4 at support D. Five equilibrium equations can be written along the five displacement directions. The problem is one-degree indeterminate because $r = n - m = 1$.

Step 1—Formulate the equilibrium equations: The five EE for the problem are written along with five displacement directions as follows:

$$
\begin{aligned}
&\text{Along } \theta_1 = X_1 \text{ at support } A, && M_1 = 0 \\
&\text{Along } \theta_2 = X_2 \text{ at support } B, && -M_2 + M_3 = 0 \\
&\text{Along } \nu_1 = X_3 \text{ under load at } C, && -\frac{(M_3 - M_4)}{a} - \frac{(M_6 - M_5)}{a} - P = 0 \\
&\text{Along } \theta_3 = X_4 \text{ under load at } C, && M_5 - M_4 = 0 \\
&\text{Along } \theta_4 = X_5 \text{ at support } D, && M_6 = 0
\end{aligned}
\tag{3.4.1}
$$

The five EE ($[B]\{F\} = \{P\}$) can be written in matrix notation as

$$
\begin{bmatrix}
-1 & 0 & 0 & 0 & 0 & 0 \\
0 & 1 & -1 & 0 & 0 & 0 \\
0 & 0 & 1/a & -1/a & -1/a & 1/a \\
0 & 0 & 0 & 1 & -1 & 0 \\
0 & 0 & 0 & 0 & 0 & 1
\end{bmatrix}
\begin{Bmatrix} M_1 \\ M_2 \\ M_3 \\ M_4 \\ M_5 \\ M_6 \end{Bmatrix}
=
\begin{Bmatrix} 0 \\ 0 \\ -P \\ 0 \\ 0 \end{Bmatrix}
\tag{3.4.2}
$$

The five EE in equation (3.4.2) are not sufficient to determine the six moments; thus, one additional CC is required.

Step 2—Derive the deformation displacement relations: The DDR ($\{\beta\} = [B]^T\{X\}$) yield

$$
\begin{aligned}
\beta_1 &= -X_1 & \beta_4 &= -\frac{X_3}{a} + X_4 \\
\beta_2 &= X_2 & \beta_5 &= -\frac{X_3}{a} - X_4 \\
\beta_3 &= -X_2 + \frac{X_3}{a} & \beta_6 &= \frac{X_3}{a} + X_5
\end{aligned}
\tag{3.4.3}
$$

Step 3—Generate the compatibility condition: The single CC for the problem is obtained by eliminating the five displacements from the six DDR:

$$2\beta_2 + 2\beta_3 + \beta_4 + \beta_5 = 0$$

or

$$\begin{bmatrix} 0 & 2 & 2 & 1 & 1 & 0 \end{bmatrix} \begin{Bmatrix} \beta_1 \\ \beta_2 \\ \beta_3 \\ \beta_4 \\ \beta_5 \\ \beta_6 \end{Bmatrix} = 0 \tag{3.4.4}$$

The correctness of the compatibility condition can be verified from its null property ($[B]\,[C]^T = [0]$).

$$\begin{bmatrix} -1 & 0 & 0 & 0 & 0 & 0 \\ 0 & 1 & -1 & 0 & 0 & 0 \\ 0 & 0 & 1/a & -1/a & -1/a & 1/a \\ 0 & 0 & 0 & 1 & -1 & 0 \\ 0 & 0 & 0 & 0 & 0 & 1 \end{bmatrix} \begin{bmatrix} 0 \\ 2 \\ 2 \\ 1 \\ 1 \\ 0 \end{bmatrix} = \begin{bmatrix} 0 \\ 0 \\ 0 \\ 0 \\ 0 \end{bmatrix} \tag{3.4.5}$$

Step 4—Formulate the force deformation relations: The FDR for a beam with the end moments derived earlier in equation (2.48) are used. For end moments M_i and M_j, the FDR shown in figure 3.4(c) can be written as

$$\beta_i = \frac{\ell}{6EI}\left(2M_i + M_j\right)$$

$$\beta_j = \frac{\ell}{6EI}\left(M_i + 2M_j\right) \tag{3.4.6}$$

For element AB, the span is $2a$, the end moments are M_1 and M_2, and the deformations are β_1 and β_2. The FDR can be written as

$$\beta_1 = \frac{2a}{6EI}\left(2M_1 + M_2\right)$$

$$\beta_2 = \frac{2a}{6EI}\left(M_1 + 2M_2\right) \tag{3.4.7}$$

Likewise, for element BC with span a, end moments M_3 and M_4, and deformations β_3 and β_4, the FDR can be written as

$$\beta_3 = \frac{a}{6EI}\left(2M_3 + M_4\right)$$

$$\beta_4 = \frac{a}{6EI}\left(M_3 + 2M_4\right) \tag{3.4.8}$$

For element CD with span a, end moments M_5 and M_6, and deformations β_5 and β_6, the FDR become

$$\beta_5 = \frac{a}{6EI}(2M_5 + M_6)$$

$$\beta_6 = \frac{a}{6EI}(M_5 + 2M_6) \tag{3.4.9}$$

Step 5—Express the compatibility conditions in terms of forces: The compatibility condition is expressed in terms of moments by eliminating deformations between the CC given by equation (2.18) and the DDR to obtain

$$\frac{a}{6EI}(4M_1 + 8M_2 + 5M_3 + 4M_4 + 2M_5 + M_6) = 0 \tag{3.4.10}$$

Step 6—Couple the equilibrium equations and compatibility conditions to obtain the IFM equations, and solve for the forces: The EE and CC are coupled to obtain the following IFM equation:

$$\begin{bmatrix} -1 & 0 & 0 & 0 & 0 & 0 \\ 0 & 1 & -1 & 0 & 0 & 0 \\ 0 & 0 & 1/a & -1/a & -1/a & 1/a \\ 0 & 0 & 0 & 1 & -1 & 0 \\ 0 & 0 & 0 & 0 & 0 & 1 \\ 4 & 8 & 5 & 4 & 2 & 1 \end{bmatrix} \begin{Bmatrix} M_1 \\ M_2 \\ M_3 \\ M_4 \\ M_5 \\ M_6 \end{Bmatrix} = \begin{Bmatrix} 0 \\ 0 \\ -P \\ 0 \\ 0 \\ 0 \end{Bmatrix} \tag{3.4.11}$$

Because of the sparsity of the matrix, the equation is solved easily to obtain the moments:

$$M_1 = 0 \qquad M_2 = -\frac{3Pa}{16} \qquad M_3 = -\frac{3Pa}{16} \qquad M_4 = \frac{13Pa}{32} \qquad M_5 = \frac{13Pa}{32} \qquad M_6 = 0 \tag{3.4.12}$$

The reactions are obtained by writing the EE along the restrained directions at supports A, B, and D (see fig. 3.4(b)):

At support A, $$R_A - \frac{M_2 - M_1}{2a} = 0 \quad \text{or} \quad R_A = -\frac{3P}{32} \tag{3.4.13a}$$

At support B, $$R_B - \frac{M_1 - M_2}{2a} - \frac{M_4 - M_3}{a} = 0 \quad \text{or} \quad R_B = \frac{11P}{16} \tag{3.4.13b}$$

At support D, $$R_D - \frac{M_5 - M_6}{a} = 0 \quad \text{or} \quad R_D = \frac{13P}{32} \tag{3.4.13c}$$

We can verify that the sum of the reactions ($R_A + R_B + R_C = P$) is equal to the applied load P.

Step 7—Back-calculate the displacements, if required, from the forces: The deformation displacement relations are used to calculate the displacements. The displacement X_3 under load P is related to the deformations (β_4, β_5) as

$$X_3 = -\frac{a}{2}(\beta_4 + \beta_5)$$

also,

$$\beta_4 + \beta_5 = \frac{a}{6EI}(M_3 + 2M_4 + 2M_5 + M_6) = \frac{23\,Pa^2}{96\,EI} \tag{3.4.14a}$$

or

$$X_3 = -\frac{23}{192}\frac{Pa^3}{EI} \tag{3.4.14b}$$

The displacement X_3 is along the negative y-direction. Likewise, other displacements are calculated as

Rotation at support A,

$$X_1 = -\beta_1 = -\frac{2aM_2}{6EI} = \frac{Pa^2}{16EI} \tag{3.4.14c}$$

Rotation at support B,

$$X_2 = \beta_2 = \frac{4aM_2}{6EI} = -\frac{Pa^2}{8EI} \tag{3.4.14d}$$

Rotation under load at C,

$$X_4 = \frac{1}{2}(\beta_4 - \beta_5) = -\frac{Pa^2}{64EI} \tag{3.4.14e}$$

Rotation at support D,

$$X_5 = \frac{1}{2}(\beta_4 + \beta_5 + 2\beta_6) = \frac{3Pa^2}{16EI} \tag{3.4.14f}$$

Load case 2: Solution for support settling.—To simplify the calculation, we assume the mechanical load to be absent ($P = 0$) and solve the problem for the settling of supports only. Support settling is accounted for in the right side of the compatibility condition in the $\{\delta R\}$ term.

$$\{\delta R\} = -[C]\{\beta\}^0 \tag{3.4.15}$$

where $\{\beta\}^0 = -\{B_r\}\overline{X} = \{B_r\}\Delta$ because $\overline{X} = -\Delta$ (see eq. (2.14d)).

The column vector $\{B_r\}$ is associated with the EE at support B along the direction of settling Δ, which for the problem is along reaction R_B. The reaction R_B can be written in terms of moments (see eq. (3.4.13b)) as

$$R_B = \{B_r\}^T\{F\} = \begin{Bmatrix} 1/2a \\ -1/2a \\ -1/a \\ 1/a \\ 0 \\ 0 \end{Bmatrix}^T \begin{Bmatrix} M_1 \\ M_2 \\ M_3 \\ M_4 \\ M_5 \\ M_6 \end{Bmatrix} \tag{3.4.16}$$

$$\{\beta\}^0 = \Delta\{B_r\} = \Delta \begin{Bmatrix} 1/2a \\ -1/2a \\ -1/a \\ 1/a \\ 0 \\ 0 \end{Bmatrix} \tag{3.4.17a}$$

$$\{\delta R\} = -[C]\{\beta\}^0 = -[0 \quad 2 \quad 2 \quad 1 \quad 1 \quad 0]\{\beta\}^0 = \frac{2\Delta}{a} \tag{3.4.17b}$$

The IFM governing equation can be rewritten by adding $\{\delta R\}$ and setting the mechanical load to $P = 0$ as

$$\begin{bmatrix} -1 & 0 & 0 & 0 & 0 & 0 \\ 0 & 1 & -1 & 0 & 0 & 0 \\ 0 & 0 & 1/a & -1/a & -1/a & 1/a \\ 0 & 0 & 0 & 1 & -1 & 0 \\ 0 & 0 & 0 & 0 & 0 & 1 \\ 4 & 8 & 5 & 4 & 2 & 1 \end{bmatrix} \begin{Bmatrix} M_1 \\ M_2 \\ M_3 \\ M_4 \\ M_5 \\ M_6 \end{Bmatrix} = \begin{Bmatrix} 0 \\ 0 \\ 0 \\ 0 \\ 0 \\ \dfrac{12EI\Delta}{a^2} \end{Bmatrix} \tag{3.4.18}$$

The IFM equations are solved to obtain the moments:

$$\begin{aligned} M_1 &= 0 \\ M_2 = M_3 &= \frac{3EI\Delta}{4a^2} \\ M_4 = M_5 &= \frac{3EI\Delta}{8a^2} \\ M_6 &= 0 \end{aligned} \tag{3.4.19}$$

Reactions are back-calculated as

$$R_A = \frac{M_2}{2a} = \frac{3EI\Delta}{8a^3}$$

$$R_B = -\frac{M_2}{2a} + \frac{M_4 - M_3}{a} = -\frac{3EI\Delta}{4a^3}$$

$$R_C = \frac{M_5}{a} = \frac{3EI\Delta}{8a^3} \tag{3.4.20}$$

In the absence of mechanical load ($P = 0$), the sum of the reactions ($R_A + R_B + R_C = 0$) is zero, and symmetry about support B is maintained ($R_A = R_C$). The settling Δ along the negative y-direction induces positive reactions at support B but negative reactions at supports A and C.

Calculation of displacement.—To calculate the displacement for the settling of supports, we decompose the total deformation $\{\beta\}$ that gives rise to the displacement into an elastic component $(\beta\}^e$ and an initial component $\{\beta\}^0$ as

$$\{\beta\} = \{\beta\}^e + \{\beta\}^0 \tag{3.4.21}$$

The elastic deformation $\{\beta\}^e$ is calculated from the moments and initial deformations, and $\{\beta\}^0$ is determined from the support settlement given by equation (3.4.17a). The total deformation obtained as the sum of the two components is as follows:

$$\beta_1^e = \frac{2aM_2}{6EI} = \frac{\Delta}{4a} \qquad \beta_1^0 = \frac{\Delta}{2a} \qquad \beta_1 = \left(\beta_1^e + \beta_1^0\right) = \frac{3\Delta}{4a}$$

$$\beta_2^e = \frac{2aM_2}{3EI} = \frac{\Delta}{2a} \qquad \beta_2^0 = -\frac{\Delta}{2a} \qquad \beta_2 = 0$$

$$\beta_3^e = \frac{a}{6EI}(2M_3 + M_4) = \frac{5\Delta}{16a} \qquad \beta_3^0 = -\frac{\Delta}{a} \qquad \beta_3 = -\frac{11\Delta}{16a}$$

$$\beta_4^e = \frac{a}{6EI}(M_3 + 2M_4) = \frac{\Delta}{4a} \qquad \beta_4^0 = \frac{\Delta}{a} \qquad \beta_4 = \frac{5\Delta}{4a}$$

$$\beta_5^e = \frac{aM_5}{3EI} = \frac{\Delta}{8a} \qquad \beta_5^0 = 0 \qquad \beta_5 = \frac{\Delta}{8a}$$

$$\beta_6^e = \frac{aM_5}{6EI} = \frac{\Delta}{16a} \qquad \beta_6^0 = 0 \qquad \beta_6 = \frac{\Delta}{16a} \tag{3.4.22}$$

Rotation at support A, $$X_1 = -\beta_1 = -\frac{3\Delta}{4a} \tag{3.4.23a}$$

Rotation at support B, $$X_2 = \beta_2 = 0 \tag{3.4.23b}$$

Rotation at C, $$X_4 = \frac{\beta_4 - \beta_5}{2} = \frac{9\Delta}{16a} \tag{3.4.23c}$$

Displacement at C, $$X_3 = -\frac{a}{2}(\beta_4 + \beta_5) = -\frac{11\Delta}{16} \tag{3.4.23d}$$

Rotation at support D, $$X_5 = \frac{1}{2}(\beta_4 + \beta_5 + 2\beta_6) = \frac{3\Delta}{4a} \tag{3.4.23e}$$

The symmetrical support settlement yields symmetrical displacements. The rotation, or slope, is zero at the center support B, $\theta_2 = X_2 = 0$; and the rotations are equal in magnitude, with opposite signs, at A and D, $\theta_1 = X_1 = -\theta_4 = -X_5$.

Illustrative Example 5: Propped Beam for a Mechanical Load, a Thermal Load, and Support Settling

A uniform propped beam of length $2a$ with a moment of inertia I of 100 in.^{4} is made of steel with a Young's modulus E of 30 000 ksi. It is subjected to a load P at the center span as shown in figure 3.5(a). Solve the problem for forces and displacements for the following load cases.

Load case 1: Mechanical load P only.

Load case 2: Thermal load—Temperature is assumed to be uniform along the length of the beam. Along the depth, the temperature variation is linear, with values T_u and T_ℓ at the upper and lower surfaces, as shown in figure 3.5(b).

Load case 3: Settling of the simple support A by the amount Δ.

Load case 1: Solution for a mechanical load.—

Step 0—Solution strategy: A coordinate system (x, y) with its origin at A is shown in figure 3.5(a). A second coordinate system $(\bar{x}, \bar{y})$ with its origin at B (see fig. 3.5(a)) is also selected to reduce calculations. The beam is divided into two elements. Two moments are selected as the unknowns for each element. The beam has four moment unknowns (M_1, M_2, M_3, M_4); thus $n = 4$. The beam has three displacement unknowns—rotation at support A and rotation as well as transverse displacement at B, or $m = 3$. Three equilibrium equations can be written for the beam. The beam is one-degree indeterminate, or $r = n - m = 1$.

Step 1—Formulate the equilibrium equations: Three equilibrium equations can be written for the problem (see fig. 3.5(c)).

(1) Rotational EE at support A, $$M_1 = 0 \tag{3.5.1a}$$

(2) Rotational EE at B, $$-M_2 + M_3 = 0 \tag{3.5.1b}$$

(3) Transverse EE at B, $$-\left(\frac{M_1 - M_2}{a} + \frac{M_4 - M_3}{a} + P\right) = 0 \tag{3.5.1c}$$

We can simplify the three EE to a single equation by using the condition $M_1 = 0$ and replacing M_3 in favor of M_2:

$$\begin{bmatrix} -2/a & 1/a \end{bmatrix} \begin{bmatrix} M_2 \\ M_4 \end{bmatrix} = \{-P\} \tag{3.5.2}$$

The single EE is expressed in terms of two unknown moments. The problem is one-degree indeterminate, and one CC is required for its solution.

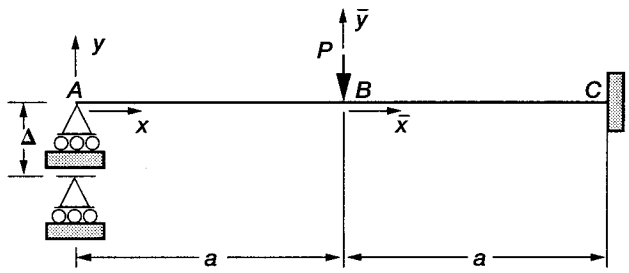

(a) Propped beam.

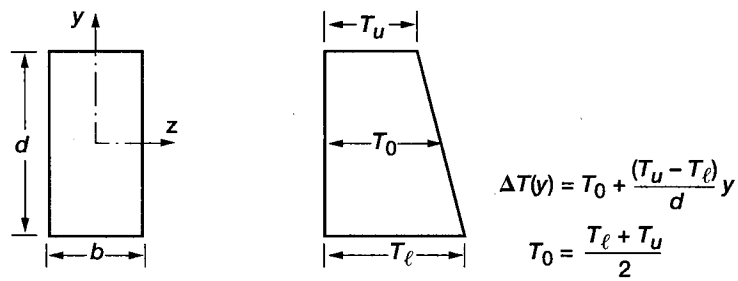

(b) Temperature distribution shown on enlarged beam cross section.

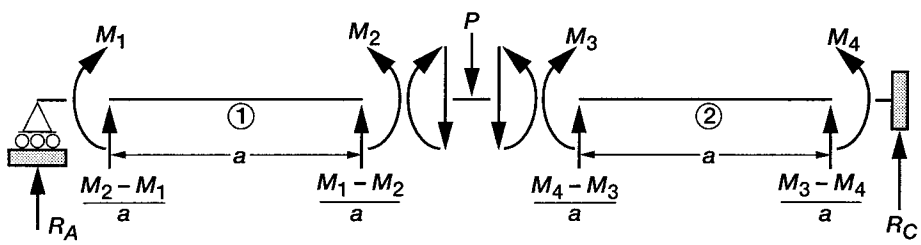

(c) Free-body diagram.

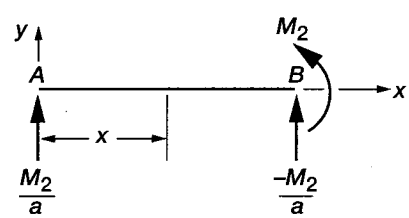

(d) Bending moment for span *AB*.

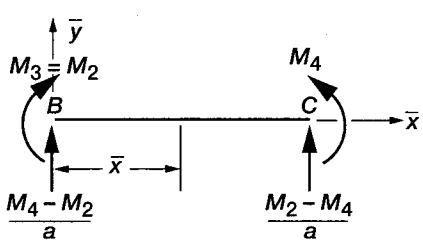

(e) Bending moment for span *BC*.

Figure 3.5.—Propped beam with settling support.

Step 2—Derive the deformation displacement relations: The two DDR ($\{\beta\} = [B]^T\{X\}$) are as follows:

$$\beta_2 = -\frac{2v}{a}$$

$$\beta_4 = \frac{v}{a} \tag{3.5.3}$$

The deformations (β_2, β_4) correspond to the moments (M_2, M_4). The transverse displacement v at B is the dual variable of the transverse EE at B, and it is considered to be positive along the load P, or negative y-direction.

Step 3—Generate the compatibility condition: The single CC is obtained by eliminating the displacement v from the two DDR as

$$\beta_2 + 2\beta_4 = 0$$

or

$$\begin{bmatrix} 1 & 2 \end{bmatrix} \begin{Bmatrix} \beta_2 \\ \beta_4 \end{Bmatrix} = 0 \tag{3.5.4}$$

The null property of the CC and EE matrices ($[B][C]^T = [0]$) can be verified as

$$\begin{bmatrix} -2/a & 1/a \end{bmatrix} \begin{bmatrix} 1 \\ 2 \end{bmatrix} = [0] \tag{3.5.5}$$

Step 4—Formulate the force deformation relations: The FDR for the structure are obtained as

$$\beta_2 = \frac{1}{EI}\int_0^{2a} \mathcal{M}\frac{\partial \mathcal{M}}{\partial M_2}\,dx$$

$$\beta_4 = \frac{1}{EI}\int_0^{2a} \mathcal{M}\frac{\partial \mathcal{M}}{\partial M_4}\,dx \tag{3.5.6}$$

For span AB.

$$\mathcal{M}(x) = \frac{M_2}{a}x \qquad \frac{\partial \mathcal{M}(x)}{\partial M_2} = \frac{x}{a} \qquad \frac{\partial \mathcal{M}(x)}{\partial M_4} = 0 \tag{3.5.7}$$

For span BC, the origin of the coordinate system is selected at B, and $\bar{x}$ is measured from B to C (see fig. 3.5(a)).

$$\mathcal{M}(\bar{x}) = \frac{M_4 - M_2}{a}\bar{x} + M_2 \qquad \frac{\partial \mathcal{M}(\bar{x})}{\partial M_2} = 1 - \frac{\bar{x}}{a} \qquad \frac{\partial \mathcal{M}(\bar{x})}{\partial M_4} = \frac{\bar{x}}{a} \tag{3.5.8}$$

The deformation β_2 can be obtained by adding contributions from spans AB and BC as follows

$$\beta_2 = \frac{1}{EI}\left\{\int_0^a \mathcal{M}\frac{\partial \mathcal{M}}{\partial M_2}\,dx + \int_a^{2a} \mathcal{M}\frac{\partial \mathcal{M}}{\partial M_2}\,dx\right\} = \wp_1 + \wp_2 \tag{3.5.9}$$

The first part of the integral for span AB becomes

$$\wp_1 = \left(\frac{1}{EI}\right)\int_0^a \left(\frac{M_2}{a}x\right)\left(\frac{x}{a}\right)dx = \frac{aM_2}{3EI} \tag{3.5.10}$$

We evaluate the second part of the integral for span BC by using the $(\bar{x}, \bar{y})$ coordinates as shown in figure 3.5(a). We change the integration limit from (a to $2a$) to (0 to a) and calculate the moment $\mathcal{M}(\bar{x})$ using the origin at B:

$$\beta_2 = \left(\frac{1}{EI}\right)\int_0^a \left\{\left(\frac{M_4 - M_2}{a}\right)(\bar{x}) + M_2\right\}\left(1 - \frac{\bar{x}}{a}\right) d\bar{x} = \frac{a}{6EI}(2M_2 + M_4) \tag{3.5.11}$$

or

$$\beta_2 = \frac{a}{6EI}(4M_2 + M_4) \tag{3.5.12}$$

Likewise, we can calculate the deformation β_4 by adding contributions from both spans:

$$\beta_4 = \frac{1}{EI}\left\{\int_0^a \mathcal{M}\frac{\partial \mathcal{M}}{\partial M_4}\, dx + \int_a^{2a} \mathcal{M}\frac{\partial \mathcal{M}}{\partial M_4}\, dx\right\}$$

$$= \frac{1}{EI}\left\{\int_0^a \left(\frac{M_2 x}{a}\right)(0) + \int_0^a \left\{\left(\frac{M_4 - M_2}{a}\bar{x} + M_2\right)\right\}\left(\frac{\bar{x}}{a}\right) d\bar{x}\right.$$

$$= \frac{a}{6EI}(M_2 + 2M_4) \tag{3.5.13}$$

Step 5—Express the compatibility conditions in terms of forces: The CC in deformations ($\beta_2 + 2\beta_4 = 0$) can be expressed in terms of moments by eliminating deformations in favor of forces between the CC and the FDR. The CC expressed in terms of moments has the following explicit form:

$$\frac{a}{6EI}(6M_2 + 5M_4) = 0 \tag{3.5.14}$$

Step 6—Couple the equilibrium equations and compatibility conditions to obtain the IFM equations, and solve for the forces: The EE and the CC are coupled to obtain the following IFM equation:

$$\begin{bmatrix} -2/a & 1/a \\ 6 & 5 \end{bmatrix}\begin{Bmatrix} M_2 \\ M_4 \end{Bmatrix} = \begin{Bmatrix} -P \\ 0 \end{Bmatrix} \tag{3.5.15}$$

The solution of the IFM equation yields the moments:

$$M_2 = \frac{5Pa}{16}$$

$$M_4 = -\frac{3Pa}{8} \tag{3.5.16}$$

Other moments (M_1, M_3) are obtained by inspection:

$$M_1 = 0$$

$$M_3 = M_2 = \frac{5Pa}{16} \tag{3.5.17}$$

Reactions (R_A, R_C) at the support are back-calculated as

At support A,
$$R_A = \frac{M_2}{a} = \frac{5P}{16} \tag{3.15.18 a}$$

At support C,
$$R_B = \frac{M_2 - M_4}{a} = \frac{11P}{16} \tag{3.15.18 b}$$

Step 7—Back-calculate the displacements, if required, from the forces: Displacement v under load P is

$$v = a\beta_4 = \frac{a^2}{6EI}(2M_4 + M_2) = -\frac{7Pa^3}{96EI} \tag{3.5.19}$$

Displacement v is verified by recalculating it from the DDR ($\beta_2 = -2v/a$) as

$$v = \frac{a\beta_2}{2} = -\frac{7Pa^3}{96EI} \tag{3.5.20}$$

The deformations (β_1, β_3) are not required to determine moments; thus, those calculations were not necessary. However, these two deformations are required to determine the rotations at support A and at load application point B. The two deformations and the two rotations can be calculated from deformation moment relations and the DDR. The deformations (β_1, β_3) can be calculated from deformation moment formulas as

For span AB,
$$\beta_1 = \frac{a}{6EI}(2M_1 + M_2) = \frac{5Pa^2}{96EI}$$

Likewise for span BC,
$$\beta_3 = \frac{a}{6EI}(2M_3 + M_4) = \frac{Pa^2}{24EI} \tag{3.5.21}$$

$$\beta_4 = \frac{a}{6EI}(2M_4 + M_3) = -\frac{7Pa^2}{96EI} \tag{3.5.22}$$

Calculation of rotation requires the deformation displacement relation, which, in turn, requires all three equilibrium equations, which can be rewritten (see eq. (3.5.1)) as

$$\begin{bmatrix} -1 & 0 & 0 & 0 \\ 0 & 1 & -1 & 0 \\ 1/a & -1/a & -1/a & 1/a \end{bmatrix} \begin{Bmatrix} M_1 \\ M_2 \\ M_3 \\ M_4 \end{Bmatrix} = \begin{Bmatrix} 0 \\ 0 \\ -P \end{Bmatrix} \tag{3.5.23}$$

Rotation θ_1, rotation θ_2, and displacement v represent the dual variables of the EE (1, 2, 3, respectively) in equation (3.5.23). The deformation displacement relations ($\{\beta\} = [B]^T\{X\}$) can be written as

$$\beta_1 = -\theta_1 + \frac{v}{a}$$

$$\beta_2^* = \theta_2 - \frac{v}{a}$$

$$\beta_3 = -\theta_2 - \frac{v}{a}$$

$$\beta_4 = \frac{v}{a} \tag{3.5.24}$$

Note that the deformation β_2 calculated earlier is different from the deformation designated β_2^* because the condition of symmetry is not used here.

$$\theta_1 = \beta_4 - \beta_1 = -\frac{Pa^2}{8EI}$$

$$\theta_2 = -(\beta_3 + \beta_4) = \frac{Pa^2}{32EI} \tag{3.5.25}$$

Load case 2: Solution for thermal loads.—We obtain the solution for a thermal load by modifying the IFM equations that have been developed for mechanical loads. The modification pertains to the term $\{\delta R\}$ in the right side of the compatibility condition. To calculate $\{\delta R\}$, we decompose the total deformations into elastic and thermal components.

$$\beta_2 = \beta_2^e + \beta_2^t$$

$$\beta_4 = \beta_4^e + \beta_4^t \tag{3.5.26}$$

Since β_2^e and β_4^e have already been calculated for mechanical load case 1, only the thermal deformations $\left(\beta_2^t \text{ and } \beta_4^t\right)$ need to be determined. These are calculated from equation (2.40) as

$$\beta_2^t = -\int_0^{2a} \frac{M_T}{EI} \frac{\partial \mathcal{M}}{\partial M_2} dx$$

$$\beta_4^t = -\int_0^{2a} \frac{M_T}{EI} \frac{\partial \mathcal{M}}{\partial M_4} dx \tag{3.5.27}$$

The thermal moment is calculated as

$$M_T = \int_{-d/2}^{d/2} E\alpha\Delta T\, b\, y\, dy$$

$$= E\alpha b \int_{-d/2}^{d/2} \Delta T\, y\, dy$$

$$= E\alpha b \int_{-d/2}^{d/2} \left(\frac{T_\ell + T_u}{2} + \frac{T_u - T_\ell}{d} y \right) y\, dy$$

$$= \frac{E\alpha b d^2}{12} (T_u - T_\ell)$$

$$\beta_2^t = -\frac{M_T}{EI} \left\{ \int_0^a \frac{\partial \mathcal{M}(x)}{\partial M_2} dx \int_0^a \frac{\partial \mathcal{M}(\bar{x})}{\partial M_2} d\bar{x} \right\}$$

$$= -\left(\frac{M_T}{EI} \right) \left\{ \int_0^a \frac{x}{a} dx + \int_0^a \left(1 - \frac{\bar{x}}{a} \right) d\bar{x} \right\} \tag{3.5.28}$$

or

$$\beta_2^t = -\frac{aM_T}{EI} \tag{3.5.29a}$$

$$\beta_4^t = -\frac{M_T}{EI} \int_0^a \frac{\bar{x}}{a} d\bar{x}$$

or

$$\beta_4^t = -\frac{aM_T}{2EI} \tag{3.5.29b}$$

$$\{\delta R\} = -[C]\{\beta^t\} = -[1 \quad 2] \begin{Bmatrix} -\dfrac{aM_T}{EI} \\ -\dfrac{aM_T}{2EI} \end{Bmatrix} = \frac{2M_T a}{EI} \tag{3.5.30}$$

The IFM equations are obtained by adding $\{\delta R\}$ into the mechanical load equations and equating mechanical load $P = 0$ as

$$\begin{bmatrix} -\dfrac{2}{a} & \dfrac{1}{a} \\ \dfrac{6a}{6EI} & \dfrac{5a}{6EI} \end{bmatrix} \begin{Bmatrix} M_2 \\ M_4 \end{Bmatrix} = \begin{Bmatrix} 0 \\ \dfrac{2M_T a}{EI} \end{Bmatrix} \tag{3.5.31}$$

Solution of the IFM equation yields

$$M_2 = \frac{3M_T}{4}$$

$$M_4 = \frac{3M_T}{2} \tag{3.5.32}$$

The moments (M_1, M_3) are obtained as

$$M_1 = 0$$

$$M_3 = M_2 = \frac{3M_T}{4} \tag{3.5.33}$$

Reactions can be back-calculated from moments as follows:

$$R_A = \frac{M_2}{a} = \frac{3M_T}{4a}$$

$$R_C = \frac{M_2 - M_4}{a} = -\frac{3M_T}{4a} \tag{3.5.34}$$

For thermal loads, the reactions are self-equilibrating ($R_A + R_C = 0$) as expected.

Calculation of displacements.—Displacements can be calculated from the deformation displacement relations by including thermal load contributions. Displacement v at B is given by

$$v = a\beta_4 = a\left(\beta_4^e + \beta_4^T\right) = \frac{a^2}{6EI}(2M_4 + M_2) - \frac{a^2 M_T}{2EI}$$

or

$$v = \frac{a^2 M_T}{8EI} \tag{3.5.35}$$

For positive M_T, or for $T_u > T_\ell$, the displacement v at B is along the positive y-direction.

Load case 3: Support settling.—Support settling has to be included in the right side of the compatibility condition $\{\delta R\}$. Since support A settles by Δ inches in the negative direction of the reaction R_A (see fig. 3.5(a)), the EE has to be written in that direction as

$$R_A = \frac{M_2}{a}$$

or

$$\{R\} = \{B_r\}^T \{F\} = \begin{bmatrix} 1/a \\ 0 \end{bmatrix}^T \begin{Bmatrix} M_2 \\ M_4 \end{Bmatrix} \tag{3.5.36}$$

$$\{\beta\}^0 = \Delta\{B_r\} = \Delta\begin{bmatrix} 1/a \\ 0 \end{bmatrix} = \begin{Bmatrix} \Delta/a \\ 0 \end{Bmatrix} \tag{3.5.37a}$$

$$\{\delta R\} = -[C]\{\beta\}^0 = -[1 \quad 2]\begin{Bmatrix} \Delta/a \\ 0 \end{Bmatrix} = -\frac{\Delta}{a} \tag{3.5.37b}$$

The factor $(6EI/a)$ earlier set to unity for mechanical loads has to be retained in $\{\delta R\}$ because CC is a nonhomogeneous equation.

$$\{\delta R\} = \left\{ \frac{6EI\Delta}{a^2} \right\} \tag{3.5.38}$$

The IFM equation, which includes the effect of support settling, but not mechanical or thermal loads, becomes

$$\begin{bmatrix} -2/a & 1/a \\ 6 & 5 \end{bmatrix} \begin{Bmatrix} M_2 \\ M_4 \end{Bmatrix} = \begin{Bmatrix} 0 \\ -\dfrac{6EI\Delta}{a^2} \end{Bmatrix} \tag{3.5.39}$$

or

$$M_2 = -\frac{3EI\Delta}{8a^2}$$

$$M_4 = -\frac{3EI\Delta}{4a^2}$$

$$M_3 = M_2 = -\frac{3EI\Delta}{8a^2}$$

and

$$M_1 = 0 \tag{3.5.40}$$

Reactions can be back-calculated from moments as follows:

$$R_A = \frac{M_2}{a} = -\frac{3EI\Delta}{8a^3}$$

$$R_C = \frac{M_2 - M_4}{a} = \frac{3EI\Delta}{8a^3} \tag{3.5.41}$$

In the absence of mechanical load, the reactions are self-equilibrating ($R_A + R_C = 0$).

We can calculate the transverse displacement v at location B by using the DDR, β_2 or β_4. Here, the displacement is calculated from both β_2 and β_4 to illustrate the participation of initial deformations $\{\beta\}^0$. From the transverse EE, which is the first equation in equation (3.5.39), the DDR can be written as

$$\beta_2 = \beta_2^e + \beta_2^0 = -\frac{2v}{a}$$

or

$$v = -\frac{a\beta_2}{2}$$

Likewise,

$$\beta_4 = \beta_4^e + \beta_4^0 = \frac{v}{a}$$

or

$$v = a\beta_4$$

Elastic deformations are

$$\beta_2^e = \frac{a}{6EI}(4M_2 + M_4) = -\frac{3}{8}\left(\frac{\Delta}{a}\right)$$

$$\beta_4^e = \frac{a}{6EI}(2M_4 + M_2) = -\frac{5}{16}\left(\frac{\Delta}{a}\right)$$

Initial deformations are

$$\beta_2^0 = \frac{\Delta}{a}$$

$$\beta_4^0 = 0$$

Total deformations are

$$\beta_2 = -\left(\frac{3}{8} - 1\right)\frac{\Delta}{a} = \frac{5}{8}\frac{\Delta}{a}$$

$$\beta_4 = -\frac{5}{16}\frac{\Delta}{a} \tag{3.5.42}$$

$$v = -\frac{a\beta_2}{2} = -\frac{5}{16}\Delta$$

also,

$$v = a\beta_4 = -\frac{5}{16}\Delta \tag{3.5.43}$$

The same displacement value ($v = -5\Delta/16$) is obtained from deformation β_2, which has an initial component, and deformation β_4, which has no initial component.

Illustrative Example 6: Fixed Beam Under a Uniform Load

A uniform beam of length ℓ is fixed at both ends as shown in figure 3.6(a). It is made of steel with a Young's modulus E and a moment of inertia I. The beam is subjected to a uniformly distributed load of intensity q per unit length. Solve the beam for forces and displacements at its center span.

Step 0—Solution strategy: The free-body diagram of the beam is shown in figure 3.6(b). Because of symmetry, the moment M and shear force V are equal at ends A and B. Furthermore, the value of shear force can be determined from the transverse equilibrium equation as

$$2V = q\ell \quad \text{or} \quad V = \frac{q\ell}{2} \tag{3.6.1}$$

The moment EE is automatically satisfied as follows:

$$M = M + V\ell - \frac{q\ell^2}{2} \tag{3.6.2}$$

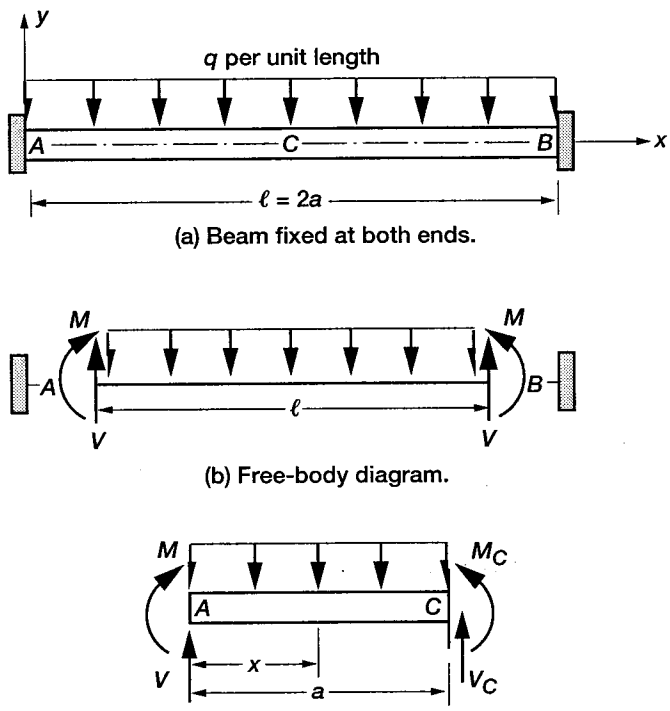

(a) Beam fixed at both ends.

(b) Free-body diagram.

(c) Free-body diagram for half of the beam.

Figure 3.6.—Fixed beam under uniform load.

The fixed beam provides no free displacement at either support A or B. For the solution of the problem, any point in the span of the beam with two unknowns (a moment and a shear force) can be selected. The center span point C is selected because displacement is required at this point.

A coordinate system (x, y) with its origin at A is selected. The problem has three unknowns (or $n = 3$), consisting of a fixed-end moment M, and M_C and V_C at C (as shown in fig. 3.6(c)). The problem has two displacements—the transverse displacement v and the rotation θ at C (or $m = 2$). The problem is one-degree indeterminate ($r = n - m = 1$).

Step 1—Formulate the equilibrium equations: Two EE can be written at point C:

Transverse EE,
$$V + V_C = \frac{q\ell}{2} \qquad \left(\text{or } V_C = 0 \quad \text{since } V = \frac{q\ell}{2}\right) \tag{3.6.3a}$$

Moment EE,
$$M_C - M - \frac{q\ell^2}{4} + \frac{q\ell^2}{8} = 0 \tag{3.6.3b}$$

Since V_C is a known quantity, the moment EE represents the only independent equation, which in matrix notation can be written as

$$\begin{bmatrix} 1 & -1 \end{bmatrix} \begin{Bmatrix} M \\ M_C \end{Bmatrix} = \left\{ -\frac{q\ell^2}{8} \right\} \tag{3.6.4}$$

The problem is one-degree indeterminate because the single EE is expressed in terms of two moments (M, M_C). Solution of the problem requires one CC.

Step 2—Derive the deformation displacement relations: The DDR for the problem have the following form:

$$\beta_1 = \theta$$

$$\beta_2 = -\theta \tag{3.6.5}$$

where the deformations (β_1, β_2) correspond to the moments (M, M_C), respectively. Rotation θ at C is the dual variable of the EE.

Step 3—Generate the compatibility condition: The single compatibility condition is obtained by eliminating the rotation θ between the two DDR:

$$\beta_1 + \beta_2 = 0 \tag{3.6.6}$$

In matrix notation, the CC can be written as

$$\begin{bmatrix} 1 & 1 \end{bmatrix} \begin{Bmatrix} \beta_1 \\ \beta_2 \end{Bmatrix} = \{0\} \tag{3.6.7}$$

The null property ($[B][C]^T = [0]$) of the EE and CC matrices can be verified as

$$\begin{bmatrix} 1 & -1 \end{bmatrix} \begin{bmatrix} 1 \\ 1 \end{bmatrix} = [0] \tag{3.6.8}$$

Step 4—Formulate the force deformation relations: The FDR for the problem can be obtained from energy considerations (see fig. 3.6(c)) as

$$\beta_1 = \frac{1}{EI} \int_0^{\ell} \mathcal{M} \frac{\partial \mathcal{M}}{\partial M} dx = \frac{2}{EI} \int_0^{\ell/2} \mathcal{M} \frac{\partial \mathcal{M}}{\partial M} dx \tag{3.6.9}$$

Because of symmetry, only half the span is integrated when deformation β_1 is being calculated; then this value is doubled to obtain β_1, where

$$\mathcal{M}(x) = M + \frac{q\ell}{2} x - \frac{qx^2}{2} \tag{3.6.10a}$$

$$\frac{\partial \mathcal{M}(x)}{\partial M} = 1 \tag{3.6.10b}$$

$$\frac{\partial \mathcal{M}(x)}{\partial M_C} = 0 \tag{3.6.10c}$$

The deformation that corresponds to the moment M_C is $\beta_2 = 0$ since $\partial \mathcal{M}(x) / \partial M_C = 0$. The deformation β_1 that corresponds to the moment M can be calculated as

$$\beta_1 = \frac{2}{EI} \int_0^{\ell/2} \left(M + \frac{q\ell x}{2} - \frac{qx^2}{2} \right) (1)\, dx \tag{3.6.11}$$

or

$$\beta_1 = \frac{2}{EI}\left(\frac{M\ell}{2} + \frac{q\ell^3}{24}\right) \tag{3.6.12}$$

Step 5—Express the compatibility conditions in terms of forces: The CC can be written in terms of moments as

$$\begin{bmatrix} \frac{\ell}{2} & 0 \end{bmatrix} \begin{Bmatrix} M \\ M_c \end{Bmatrix} = \begin{Bmatrix} -\frac{q\ell^3}{24} \end{Bmatrix} \tag{3.6.13}$$

Step 6—Couple the equilibrium equations and compatibility conditions to obtain the IFM equations, and solve for the forces: The IFM equation is

$$\begin{bmatrix} 1 & -1 \\ \frac{\ell}{2} & 0 \end{bmatrix} \begin{Bmatrix} M \\ M_C \end{Bmatrix} = \begin{Bmatrix} -\frac{q\ell^2}{8} \\ \frac{-q\ell^3}{24} \end{Bmatrix} \tag{3.6.14}$$

Solution of the IFM equation yields

$$M = -\frac{q\ell^2}{12} \qquad M_C = \frac{q\ell^2}{24} \qquad V = \frac{q\ell}{2} \tag{3.6.15}$$

Step 7—Back-calculate the displacements, if required, from the forces: The displacement function $w(x)$ is obtained by integrating the moment curvature relations:

$$\frac{d^2 w}{dx^2} = \frac{\mathcal{M}(x)}{EI} \tag{3.6.16}$$

where

$$\mathcal{M}(x) = M + \frac{q\ell x}{2} - q\frac{x^2}{2} = -\frac{q\ell^2}{12} + \frac{q\ell x}{2} - \frac{qx^2}{2} \tag{3.6.17}$$

Integration of the moment curvature relations yields

$$w(x) = \frac{1}{EI}\left(-\frac{q\ell^2 x^2}{24} + \frac{q\ell x^3}{12} - \frac{qx^4}{24}\right) + c_1 x + c_2 \tag{3.6.18}$$

The displacement boundary conditions, $w = 0$ at $x = 0$ and $x = \ell$, can be used to obtain the integration constraints as $c_1 = c_2 = 0$. The displacement function $w(x)$ can be written as

$$w(x) = \frac{1}{EI}\left(-\frac{q\ell^2 x^2}{24} + \frac{q\ell x^3}{12} - \frac{qx^4}{24}\right) \tag{3.6.19}$$

The displacement at the center span is obtained for ($x = \ell/2$) as

$$w_C = -\frac{q\ell^4}{384EI} \tag{3.6.20}$$

The displacement at C is along the negative y-direction, which is also the direction of load q.

Illustrative Example 7: Clamped Beam for a Mechanical Load, a Thermal Load, and Support Settling

A uniform beam of depth d, thickness b, and moment of inertia I is made of steel with a Young's modulus of E and a coefficient of expansion of α per °F. It is clamped at both ends (A and B) as shown in figure 3.7(a). The beam is subjected to a concentrated load of magnitude P. Analyze the beam for the following load cases:

Load case 1: Transverse load P at the center span
Load case 2: Uniform temperature along the length of the beam (Along the depth, the temperature variation is linear with values ΔT and $-\Delta T$ at the upper and lower surfaces, respectively, as shown in figure 3.7(b).)
Load case 3: Settling of supports A and B by Δ_A and Δ_B inches, respectively

Load case 1: Solution for a mechanical load.—

Step 0—Solution strategy: The coordinate system (x, y) with its origin at A is shown in figure 3.7(a). The beam is divided into two elements (1, 2); and three nodes (A, B, C). Four moments (M_1, M_2, M_3, M_4), as shown in figure 3.7(c), are considered as the force unknowns of the problem, or $n = 4$. The problem has two free displacements at location C, consisting of the transverse displacement v and the rotation θ, or $m = 2$. The problem is two-degrees indeterminate ($r = n - m = 2$).

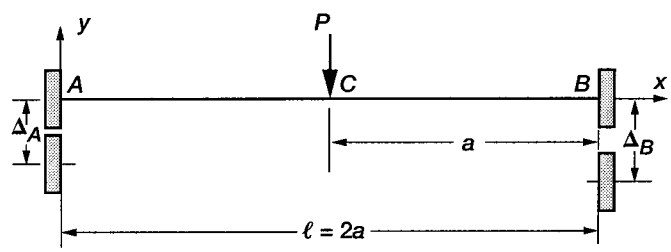

(a) Clamped beam under concentrated load.

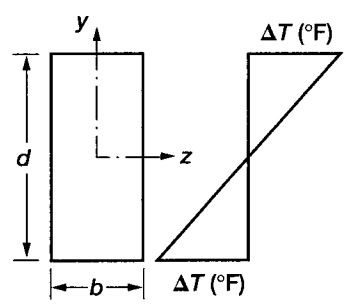

(b) Temperature distribution shown on enlarged cross section.

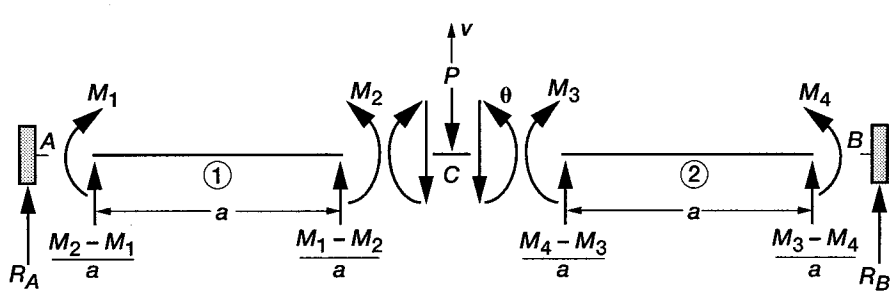

(c) Free-body diagram.

Figure 3.7.—Clamped beam under a concentrated load and settling support.

Step 1—Formulate the equilibrium equations: Two equilibrium equations can be written at C, consisting of one transverse EE and one rotational EE. The transverse EE at C along the displacement v direction (see fig. 3.7(c)) can be written as

$$-\left(\frac{M_1 - M_2}{a} + \frac{M_4 - M_3}{a} + P\right) = 0 \tag{3.7.1}$$

The rotational EE at C along the θ displacement direction can be written as

$$-M_2 + M_3 = 0 \tag{3.7.2}$$

The two EE in matrix notation can be written as

$$\begin{bmatrix} 1/a & -1/a & -1/a & 1/a \\ 0 & 1 & -1 & 0 \end{bmatrix} \begin{Bmatrix} M_1 \\ M_2 \\ M_3 \\ M_4 \end{Bmatrix} = \begin{Bmatrix} -P \\ 0 \end{Bmatrix} \tag{3.7.3}$$

Two EE are expressed in terms of four unknown moments (M_1, M_2, M_3, M_4), or the problem is two-degrees indeterminate. Two CC are required for its solution.

Step 2—Derive the deformation displacement relations: The DDR ($\{\beta\} = [B]^T\{X\}$) are obtained as

$$\beta_1 = \frac{v}{a}$$

$$\beta_2 = -\frac{v}{a} + \theta$$

$$\beta_3 = -\frac{v}{a} - \theta$$

$$\beta_4 = \frac{v}{a} \tag{3.7.4}$$

The deformations (β_1, β_2, β_3, β_4) correspond to the moments (M_1, M_2, M_3, M_4), respectively. Displacements v and θ are the dual variables of the transverse and rotational EE, respectively.

Step 3—Generate the compatibility conditions: The two CC for the problem are obtained by eliminating the two displacements from the four DDR as

$$\beta_1 - \beta_4 = 0$$

$$\beta_1 + \beta_2 + \beta_3 + \beta_4 = 0 \tag{3.7.5}$$

In matrix notation, the CC can be written as

$$\begin{bmatrix} 1 & 0 & 0 & -1 \\ 1 & 1 & 1 & 1 \end{bmatrix} \begin{Bmatrix} \beta_1 \\ \beta_2 \\ \beta_3 \\ \beta_4 \end{Bmatrix} = \begin{Bmatrix} 0 \\ 0 \end{Bmatrix} \tag{3.7.6}$$

The null property ($[B][C]^T = [0]$) of the EE and CC matrices can be verified as

$$\begin{bmatrix} 1/a & -1/a & -1/a & 1/a \\ 0 & 1 & -1 & 0 \end{bmatrix} \begin{bmatrix} 1 & 1 \\ 0 & 1 \\ 0 & 1 \\ -1 & 1 \end{bmatrix} = \begin{bmatrix} 0 & 0 \\ 0 & 0 \end{bmatrix} \tag{3.7.7}$$

Step 4—Formulate the force deformation relations: The FDR for a beam element (derived earlier, see eq. (2.48c)) are used here. For beam element AC, the FDR are

$$\beta_1 = \frac{a}{6EI}(2M_1 + M_2)$$

$$\beta_2 = \frac{a}{6EI}(2M_2 + M_1) \tag{3.7.8}$$

Likewise, the FDR for beam element CB are

$$\beta_3 = \frac{a}{6EI}(2M_3 + M_4)$$

$$\beta_4 = \frac{a}{6EI}(2M_4 + M_3) \tag{3.7.9}$$

Step 5—Express the compatibility conditions in terms of forces: Elimination of deformations $\{\beta\}$ between the CC and FDR yields the CC in moments:

$$\frac{a}{6EI}\begin{bmatrix} 2 & 1 & -1 & -2 \\ 3 & 3 & 3 & 3 \end{bmatrix} \begin{Bmatrix} M_1 \\ M_2 \\ M_3 \\ M_4 \end{Bmatrix} = \begin{Bmatrix} 0 \\ 0 \end{Bmatrix} \tag{3.7.10}$$

Step 6—Couple the equilibrium equations and compatibility conditions to obtain the IFM equations, and solve for the forces: The IFM equations are as follows:

$$\begin{bmatrix} 1/a & -1/a & -1/a & 1/a \\ 0 & 1 & -1 & 0 \\ 2 & 1 & -1 & -2 \\ 3 & 3 & 3 & 3 \end{bmatrix} \begin{Bmatrix} M_1 \\ M_2 \\ M_3 \\ M_4 \end{Bmatrix} = \begin{Bmatrix} -P \\ 0 \\ 0 \\ 0 \end{Bmatrix} \tag{3.7.11}$$

Solution of the IFM equation yields the moments as

$$M_1 = -\frac{P\ell}{8} \quad M_3 = \frac{P\ell}{8}$$

$$M_2 = \frac{P\ell}{8} \quad M_4 = -\frac{P\ell}{8} \tag{3.7.12}$$

Reactions R_A and R_B can be back-calculated as (see fig. 3.7(c)).

$$R_A = \frac{M_2 - M_1}{a} = \frac{P}{2}$$

$$R_B = \frac{M_3 - M_4}{a} = \frac{P}{2} \tag{3.7.13}$$

Step 7—Back-calculate the displacements, if required, from the forces: The displacements can be calculated from the deformation displacement relations. The displacement at C under load P is

$$v = a\beta_1 = \frac{a^2}{6EI}(2M_1 + M_2) = -\frac{P\ell^3}{192EI} \tag{3.7.14}$$

The displacement v is along the negative y-direction, which is also the direction of load P. The slope at C is

$$\theta = \beta_1 + \beta_2 = \frac{a}{6EI}(2M_1 + M_2) + \frac{a}{6EI}(2M_2 + M_1) = \frac{a}{2EI}(M_1 + M_2) = 0 \tag{3.7.15}$$

Slope θ at the center span of the beam is zero because of symmetry.

Load case 2: Uniform temperature.—For thermal analysis, the right side of the compatibility conditions, $\{\delta R\}$, which is a nontrivial vector, is calculated as follows:

$$\{\delta R\} = -[C]\{\beta\}^0 \tag{3.7.16}$$

where

$$\{\beta\}^0 = \begin{Bmatrix} \beta_1^t \\ \beta_2^t \\ \beta_3^t \\ \beta_4^t \end{Bmatrix} \tag{3.7.17a}$$

$$\beta_j^t = -\int_0^\ell \frac{M_T}{EI}\left(\frac{\partial \mathcal{M}}{\partial M_j}\right)dx \qquad (j = 1, 2, 3, \text{and } 4) \tag{3.7.17b}$$

The thermal moment M_T is

$$M_T = \int_{-d/2}^{d/2} E\alpha\, T(y) y b\, dy \tag{3.7.18}$$

since $T(y) = \dfrac{2\Delta T y}{d}$,

$$M_T = \frac{E\alpha\Delta T}{6} bd^2 = \frac{2E}{d}\left(\frac{bd^3}{12}\right)\alpha\Delta T$$

or

$$M_T = \frac{2EI\alpha\Delta T}{d} \tag{3.7.19}$$

For span AC, the moment function $\mathcal{M}(x)$, see figure 3.7(c), can be written as

$$\mathcal{M}(x) = M_1 + \frac{M_2 - M_1}{a} x$$

$$\frac{d\mathcal{M}}{dM_1} = \left(1 - \frac{x}{a}\right)$$

$$\frac{d\mathcal{M}}{dM_2} = \frac{x}{a} \tag{3.7.20}$$

Upon integration, the thermal deformations are obtained as

$$\beta_1^t = -\frac{M_T}{EI}\int_o^a \left(1 - \frac{x}{a}\right) dx = -\frac{aM_T}{2EI} = -\frac{\alpha\Delta Ta}{d}$$

$$\beta_2^t = -\frac{M_T}{EI}\int_o^a \left(\frac{x}{a}\right) dx = -\frac{aM_T}{2EI} = -\frac{\alpha\Delta Ta}{d} \tag{3.7.21}$$

The span CB has no contribution to the thermal deformations β_1^t and β_2^t because

$$\frac{\partial\mathcal{M}}{\partial M_1} = \frac{\partial\mathcal{M}}{\partial M_2} = 0$$

Likewise, the thermal deformations β_3^t and β_4^t can be calculated as

$$\beta_3^t = -\frac{aM_T}{2EI} = -\frac{\alpha\Delta Ta}{d}$$

$$\beta_4^t = -\frac{aM_T}{2EI} = -\frac{\alpha\Delta Ta}{d} \tag{3.7.22}$$

The effective initial deformation vector $\{\delta R\}$ becomes

$$\{\delta R\} = -\begin{bmatrix} 1 & 0 & 0 & -1 \\ 1 & 1 & 1 & 1 \end{bmatrix}\left(-\frac{\alpha\Delta Ta}{d}\right)\begin{Bmatrix} 1 \\ 1 \\ 1 \\ 1 \end{Bmatrix} = \frac{4\alpha\Delta Ta}{d}\begin{Bmatrix} 0 \\ 1 \end{Bmatrix} \tag{3.7.23}$$

The IFM governing equation for thermal load can be written as

$$\begin{bmatrix} 1/a & -1/a & -1/a & 1/a \\ 0 & 1 & -1 & 0 \\ 2 & 1 & -1 & -2 \\ 3 & 3 & 3 & 3 \end{bmatrix} \begin{Bmatrix} M_1 \\ M_2 \\ M_3 \\ M_4 \end{Bmatrix} = \begin{Bmatrix} 0 \\ 0 \\ 0 \\ \dfrac{24EI\alpha\Delta T}{d} \end{Bmatrix} \tag{3.7.24}$$

Solution of the IFM equation yields the moments:

$$\begin{Bmatrix} M_1 \\ M_2 \\ M_3 \\ M_4 \end{Bmatrix} = \frac{2EI\alpha\Delta T}{d} \begin{Bmatrix} 1 \\ 1 \\ 1 \\ 1 \end{Bmatrix} \tag{3.7.25}$$

and displacements can be calculated as follows:

$$v = a\beta_1$$

$$\beta_1 = \beta_1^e + \beta_1^t = \frac{a}{6EI}(2M_1 + M_2) - \frac{\alpha\Delta Ta}{d} = 0 \tag{3.7.26a}$$

Likewise, $$\beta_2 = 0$$

thus, $$v = 0$$

and $$\theta = \beta_1 + \beta_2 = 0 \tag{3.7.26b}$$

The temperature distribution, which varies along the depth of the beam but is constant across its length, does not induce displacements in the fixed beam. In other words, because the elastic and thermal deformations are equal and opposite, they cancel each other. The beam is stressed because of nontrivial elastic deformations.

Load case 3: Support settling.—Support settling is also accounted for in $\{\delta R\}$, which is the right side of the CC. As before, this vector is calculated as

$$\{\delta R\} = -[\mathrm{C}]\{\beta\}^0$$

$$\{\beta\}^0 = -[B_r]\{\overline{X}\}$$

$$\{\overline{X}\} = -\begin{Bmatrix} \Delta_A \\ \Delta_B \end{Bmatrix} \tag{3.7.27}$$

Here, Δ_A and Δ_B are the settling of supports A and B along the negative y-direction, respectively, as shown in figure 3.7(a). The reactions R_A and R_B corresponding to the amounts of settling can be expressed in terms of moments (see fig. 3.7(c)) as

$$R_A = \begin{Bmatrix} -1/a \\ 1/a \\ 0 \\ 0 \end{Bmatrix}^T \begin{Bmatrix} M_1 \\ M_2 \\ M_3 \\ M_4 \end{Bmatrix} \quad \text{and} \quad R_B = \begin{Bmatrix} 0 \\ 0 \\ 1/a \\ -1/a \end{Bmatrix}^T \begin{Bmatrix} M_1 \\ M_2 \\ M_3 \\ M_4 \end{Bmatrix} \tag{3.7.28}$$

$$\{\beta\}^0 = -[B_r]\{\overline{X}\} = \begin{bmatrix} -1/a & 0 \\ 1/a & 0 \\ 0 & 1/a \\ 0 & -1/a \end{bmatrix} \begin{Bmatrix} \Delta_A \\ \Delta_B \end{Bmatrix} = \left(\frac{1}{a}\right) \begin{Bmatrix} -\Delta_A \\ \Delta_A \\ \Delta_B \\ -\Delta_B \end{Bmatrix} \tag{3.7.29}$$

$$\{\delta R\} = -[C]\{\beta\}^0 = -\begin{bmatrix} 1 & 0 & 0 & -1 \\ 1 & 1 & 1 & 1 \end{bmatrix} \left(\frac{1}{a}\right) \begin{Bmatrix} -\Delta_A \\ \Delta_A \\ \Delta_B \\ -\Delta_B \end{Bmatrix} \tag{3.7.30}$$

or

$$\{\delta R\} = \begin{Bmatrix} \dfrac{\Delta_A - \Delta_B}{a} \\ \\ 0 \end{Bmatrix}$$

The IFM equation for support settling can be written as

$$\begin{bmatrix} 1/a & -1/a & -1/a & 1/a \\ 0 & 1 & -1 & 0 \\ 2 & 1 & -1 & -2 \\ 3 & 3 & 3 & 3 \end{bmatrix} \begin{Bmatrix} M_1 \\ M_2 \\ M_3 \\ M_4 \end{Bmatrix} = \frac{6EI}{a^2} \begin{Bmatrix} 0 \\ 0 \\ \Delta_A - \Delta_B \\ 0 \end{Bmatrix} \tag{3.7.31}$$

Solution of the IFM equation yields the moments

$$\begin{Bmatrix} M_1 \\ M_2 \\ M_3 \\ M_4 \end{Bmatrix} = \frac{6EI}{\ell^2} \begin{Bmatrix} \Delta_A - \Delta_B \\ 0 \\ 0 \\ \Delta_B - \Delta_A \end{Bmatrix} \tag{3.7.32}$$

For an equal amount of settlement ($\Delta_A = \Delta_B$), $M_1 = M_2 = M_3 = M_4 = 0$, and the structure is stress-free. Reactions can be back-calculated from the moments as

$$R_A = \frac{M_2 - M_1}{a} = \frac{12EI(\Delta_B - \Delta_A)}{\ell^3}$$

$$R_B = -\frac{12EI(\Delta_B - \Delta_A)}{\ell^3} \tag{3.7.33}$$

The reactions are self-equilibrating ($R_A + R_B = 0$) when supports settle and there is no other load.

Calculation of displacements.—Displacements can be calculated from the deformation displacement relations. The midspan displacement v can be written as

$$v = a\beta_1 = \frac{\ell}{2}\left(\beta_1^e + \beta_1^0\right)$$

$$\beta_1^e = \frac{a}{6EI}\left(2M_1 + M_2\right) = \frac{\Delta_A - \Delta_B}{\ell}$$

$$\beta_1^0 = -2\frac{\Delta_A}{\ell}$$

$$v = -\frac{\left(\Delta_A + \Delta_B\right)}{2} \tag{3.7.34}$$

The displacement v is along the negative y-direction (or along load P).

The midspan rotation θ can be written as

$$\theta = \beta_1 + \beta_2$$

$$\beta_1 = \beta_1^e + \beta_1^0 = -\frac{\left(\Delta_A + \Delta_B\right)}{\ell}$$

$$\beta_2 = \beta_2^e + \beta_2^t$$

$$\beta_2^e = \frac{1}{2\ell}\left(\Delta_A - \Delta_B\right) \quad \text{and} \quad \beta_2^0 = \frac{2\Delta_A}{\ell}$$

or

$$\theta = \frac{3\left(\Delta_A - \Delta_B\right)}{2\ell} \tag{3.7.35}$$

For symmetrical settling of supports ($\Delta_A = \Delta_B$), rotation, or slope, $\theta = 0$.

Illustrative Example 8: Torsion of a Shaft Fixed at Both Ends

A circular shaft fixed at both ends and made of two materials with shear moduli G_1 and G_2 and polar moments of inertia J_1 and J_2, is shown in figure 3.8(a). The shaft, which has a total length of ℓ, is subjected to a torque $\bar{T}$ at a distance a from its left support. Analyze the shaft for torque and angle of twist.

Step 0—Solution strategy: Figure 3.8(a) shows the coordinate system (x, y) with its origin at A. The fixed-end reactive torques (T_A, T_C) are considered as the unknowns, or $n = 2$. Only one EE, or $m = 1$, representing torque balance along the x-axis, can be written. A dual variable, or angle of twist φ, is associated with the EE. The problem is one-degree indeterminate ($r = n - m = 1$).

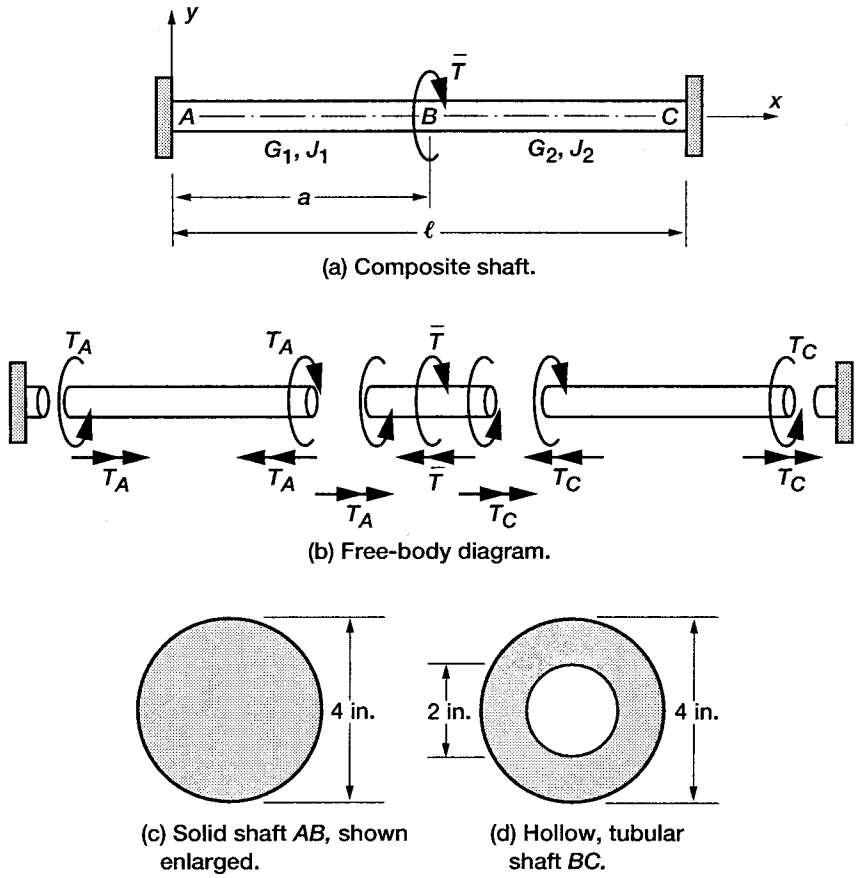

Figure 3.8.—Torsion of a circular shaft fixed at both ends.

Step 1—Formulate the equilibrium equations: Torque balance yields a single EE for the problem:

$$T_A + T_C - \bar{T} = 0 \tag{3.8.1}$$

In matrix notation, the EE can be written as

$$\begin{bmatrix} -1 & -1 \end{bmatrix} \begin{Bmatrix} T_A \\ T_C \end{Bmatrix} = \left\{ -\bar{T} \right\} \tag{3.8.2}$$

The problem is one-degree indeterminate because two unknown torques are expressed by one EE.

Step 2—Derive the deformation displacement relations: The DDR ($\{\beta\} = [B]^T\{X\}$) are obtained from the EE as

$$\beta_1 = -\varphi$$

$$\beta_2 = -\varphi \tag{3.8.3}$$

where φ is the dual variable of the EE and the deformations (β_1, β_2) correspond to the torques (T_A, T_C), respectively.

Step 3—Generate the compatibility conditions: The single CC for the problem is obtained by eliminating φ from the two DDR:

$$\beta_1 - \beta_2 = 0$$

or

$$\begin{bmatrix} 1 & -1 \end{bmatrix} \begin{Bmatrix} \beta_1 \\ \beta_2 \end{Bmatrix} = \{0\} \tag{3.8.4}$$

The correctness of the EE and CC matrices can be verified from their null property ($[B][C]^T = [0]$) as

$$\begin{bmatrix} -1 & -1 \end{bmatrix} \begin{bmatrix} 1 \\ -1 \end{bmatrix} = [0] \tag{3.8.5}$$

Step 4—Formulate the force deformation relations: The FDR for the problem can be determined from the following integral derived earlier in equation (2.45a):

$$\beta = \frac{1}{JG} \int_0^{\ell} \frac{\tau}{JG} \frac{\partial T}{\partial T} dx \tag{3.8.6}$$

For span AB ($J = J_1$ and $G = G_1$), the torque is

$$T = -T_A \quad \text{and} \quad \frac{dT}{dT_A} = -1 \qquad \frac{dT}{dT_C} = 0 \tag{3.8.7}$$

For span BC ($J = J_2$ and $G = G_2$), the torque is

$$T = -T_A + \bar{T} \quad \text{and} \quad \frac{dT}{dT_A} = -1 \qquad \frac{dT}{dT_C} = 0$$

$$\beta_1 = \frac{1}{J_1 G_1} \int_0^a -T_A(-1)dx + \frac{1}{J_2 G_2} \int_a^{\ell} \left(-T_A + \bar{T}\right)(-1)dx \tag{3.8.8}$$

or

$$\beta_1 = \frac{T_A a}{J_1 G_1} + \frac{\left(T_A - \bar{T}\right)(\ell - a)}{J_2 G_2} \tag{3.8.9a}$$

$$\beta_2 = 0 \quad \text{because} \quad \frac{dT}{dT_C} = 0 \tag{3.8.9b}$$

Step 5—Express the compatibility conditions in terms of forces: The CC written in terms of torque has the following form:

$$\begin{bmatrix} \frac{a}{J_1 G_1} + \frac{\ell - a}{J_2 G_2} & 0 \end{bmatrix} \begin{Bmatrix} T_A \\ T_C \end{Bmatrix} = \begin{Bmatrix} \frac{\bar{T}(\ell - a)}{J_2 G_2} \end{Bmatrix} \tag{3.8.10}$$

Step 6—Couple the equilibrium equations and compatibility conditions to obtain the IFM equations, and solve for the forces: The IFM equation can be written as

$$\begin{bmatrix} -1 & -1 \\ \dfrac{a}{J_1G_1}+\dfrac{\ell-a}{J_2G_2} & 0 \end{bmatrix}\begin{Bmatrix} T_A \\ T_C \end{Bmatrix}=\begin{Bmatrix} -\overline{T} \\ \dfrac{\overline{T}(\ell-a)}{J_2G_2} \end{Bmatrix} \tag{3.8.11}$$

Solution of the IFM equation yields

$$\begin{Bmatrix} T_A \\ T_C \end{Bmatrix}=\overline{T}\begin{bmatrix} \dfrac{\ell-a}{J_2G_2}\left(\dfrac{1}{\dfrac{a}{J_1G_1}+\dfrac{\ell-a}{J_2G_2}}\right) \\ 1-\dfrac{\ell-a}{J_2G_2}\left(\dfrac{1}{\dfrac{a}{J_1G_1}+\dfrac{\ell-a}{J_2G_2}}\right) \end{bmatrix} \tag{3.8.12}$$

For $\ell = 2a$, $J_1 = J_2 = J$, and $G_1 = G_2 = G$, the torques T_A and T_C simplify to

$$\begin{Bmatrix} T_A \\ T_C \end{Bmatrix}=\overline{T}\begin{Bmatrix} 1/2 \\ 1/2 \end{Bmatrix} \tag{3.8.13}$$

The total deformation φ is obtained by substituting $\overline{T} = 2T_C$ and $(T_A = T_C)$ in equation (3.8.9a) as

$$\varphi = -\beta_1 = -\left\{\frac{T_A a}{J_1G_1}-\frac{T_C}{J_2G_2}(\ell-a)\right\} \tag{3.8.14}$$

For a uniform shaft, $J_1 = J_2 = J$, $G_1 = G_2 = G$, and external torque $\overline{T}$ applied at the center of the shaft, the deformation becomes

$$\varphi = -\frac{\overline{T}a}{2JG}+\frac{\overline{T}a}{2JG}=0 \tag{3.8.15}$$

The twist angle φ is 0 because of symmetry. The twist angles for the individual shafts (*AB* and *BC*) are

$$\varphi_{AB} = -\frac{T_A a}{J_1G_1}$$

$$\varphi_{BC} = \frac{T_C(\ell-a)}{J_2G_2} \tag{3.8.16}$$

Next consider a shaft made of two different materials. Shaft *AB* is a 4-in.-diameter solid shaft (fig. 3.8(c)) made of annealed bronze. It has a shear modulus G_1 of 6500 ksi and a length a of 6.5 ft. Shaft *BC* is a hollow, tubular shaft with an outside diameter of 4 in. and an inside diameter of 2 in. (fig. 3.8(d)). It is made of aluminum with a shear modulus of 4000 ksi and a length b of $\ell - a = 5$ ft. The applied torque $\overline{T}$ = 20 000 in.-lb. Numerical values for the composite shaft are

$$J_1 = \frac{\pi r^4}{2} = 8\pi \text{ in.}^4 \qquad J_1 G_1 = 5.2\pi \times 10^4 \text{ kips-in.}^2 \qquad a = 78 \text{ in.}$$

$$J_2 = \frac{\pi}{2}\left(r_1^4 - r_2^4\right) = 7.5\pi \text{ in.}^4 \qquad J_2 G_2 = 3\pi \times 10^4 \text{ kips-in.}^2 \qquad \ell - a = 60 \text{ in.} \qquad \ell = 138 \text{ in.} \tag{3.8.17}$$

For these values,

$$\begin{Bmatrix} T_A \\ T_C \end{Bmatrix} = \begin{Bmatrix} 11.4286 \\ 8.5714 \end{Bmatrix} 10^3 \text{ in.-lb} \tag{3.8.18}$$

Twist angle for the first shaft, $\varphi_{AB} = -54.56 \times 10^{-4}$ rad

Twist angle for the second shaft, $\varphi_{BC} = 54.56 \times 10^{-4}$ rad

Total twist angle, $\varphi = \varphi_{AB} + \varphi_{BC} = 0$

Illustrative Example 9: Beam Supported by a Tie Rod

A steel beam of length L, modulus of elasticity E_b, and moment of inertia I_b is fixed at C and supported by a tie rod at B. It is subjected to a uniformly distributed load of intensity q per unit length. The tie rod, which is made of aluminum, has a cross-sectional area of A_t, a modulus of elasticity of E_t, and length ℓ. Determine the force in the tie rod, the reactions at C, and the displacement at B.

Step 0—Solution strategy: A coordinate system (x, y) with its origin at B is shown in figure 3.9(a). Tensile bar forces are assumed to be positive. A reaction (R_B) at B and two reactions (R_C, M_C) at C are considered as the three force unknowns of the problem, or $n = 3$. From the free-body diagram of the problem shown in figure 3.9.(b), the internal force F in the tie rod is equal to the reaction at B (or $F = R_B$). Two equilibrium equations—one along the transverse y-direction with v as the dual displacement variable and the other along the rotation θ or the z-direction—can be written, or $m = 2$. The problem is one-degree indeterminate $(r = n - m = 1)$.

Step 1—Formulate the equilibrium equations: The transverse and rotational EE of the problem are as follows:

Transverse EE: $$R_B + R_C - qL = 0 \tag{3.9.1a}$$

Rotational EE at B: $$M_C + R_C L - \frac{qL^2}{2} = 0 \tag{3.9.1b}$$

In matrix notation, the EE can be written as

$$\begin{bmatrix} -1 & -1 & 0 \\ 0 & -L & -1 \end{bmatrix} \begin{Bmatrix} R_B \\ R_C \\ M_C \end{Bmatrix} = \begin{Bmatrix} -qL \\ -\dfrac{qL^2}{2} \end{Bmatrix} \tag{3.9.2}$$

Since three force unknowns (R_B, R_C, M_C) are expressed in terms of two EE, one CC is required for the determination of the unknown reactions.

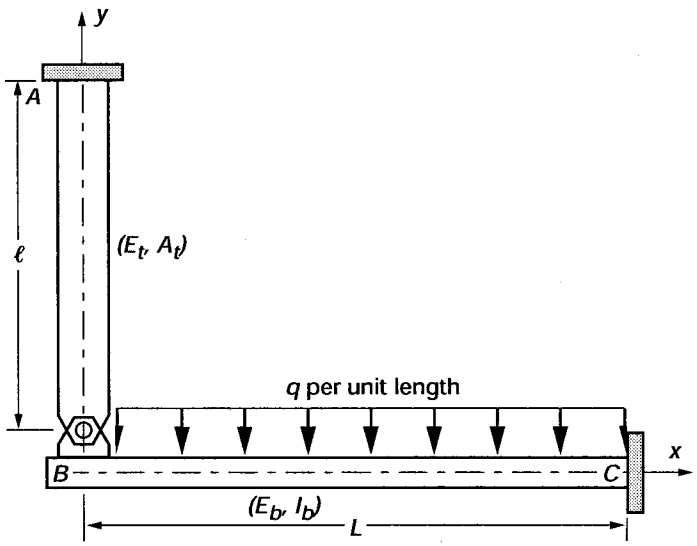

(a) Beam.

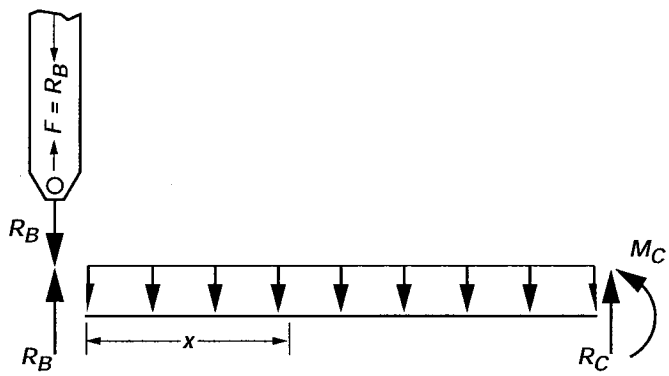

(b) Free-body diagram.

Figure 3.9.- Beam supported by a tie rod.

Step 2—Derive the deformation displacement relations: The DDR ($\{\beta\} = [B]^T\{X\}$) for the problem are as follows:

$$\beta_1 = -v$$

$$\beta_2 = -v - L\theta$$

$$\beta_3 = -\theta \tag{3.9.3}$$

Deformations (β_1, β_2, β_3) correspond to the forces (R_B, R_C, M_C), respectively. Displacement v and rotation θ are the dual variables of the transverse and rotational EE, respectively.

Step 3—Generate the compatibility condition: The single CC is obtained by eliminating v and θ from the three DDR as follows:

$$\beta_1 - \beta_2 + L\beta_3 = 0 \tag{3.9.4}$$

In matrix notation, the CC can be written as

$$\begin{bmatrix} 1 & -1 & L \end{bmatrix} \begin{Bmatrix} \beta_1 \\ \beta_2 \\ \beta_3 \end{Bmatrix} = \{0\} \tag{3.9.5}$$

The null property ($[B][C]^T = [0]$) of the equilibrium and compatibility matrices can be verified as

$$\begin{bmatrix} -1 & -1 & 0 \\ 0 & -L & -1 \end{bmatrix} \begin{bmatrix} 1 \\ -1 \\ L \end{bmatrix} = \begin{bmatrix} 0 \\ 0 \end{bmatrix} \tag{3.9.6}$$

Step 4—Formulate the force deformation relation: The deformation in the CC represents the total deformation, which is composed of two components: beam deformations $\{\beta\}^{\text{beam}}$ and tie-rod deformations $\{\beta\}^{\text{tie rod}}$, as

$$\{\beta\} = \{\beta\}^{\text{beam}} + \{\beta\}^{\text{tie rod}} \tag{3.9.7}$$

Calculation of the beam deformation contributions.—The beam deformation component β_1^{beam} due to the reaction R_B is obtained as the partial derivative of the strain energy U^b stored in the beam with respect to R_B:

$$\beta_1^{\text{beam}} = \frac{\partial U^b}{\partial R_B} = \frac{1}{E1}\int_0^L \mathcal{M}(x)\frac{\partial \mathcal{M}}{\partial R_B}\,dx \tag{3.9.8}$$

where

$$\mathcal{M}(x) = R_B\,x - \frac{qx^2}{2}$$

$$\frac{\partial \mathcal{M}(x)}{\partial R_B} = x \tag{3.9.9}$$

or

$$\beta_1^{\text{beam}} = \frac{1}{E_b I_b}\left(\frac{R_B L^3}{3} - \frac{qL^4}{8}\right) \tag{3.9.10}$$

Deformation components $\left(\beta_2^{\text{beam}} = \beta_3^{\text{beam}} = 0\right)$ are zero because $\partial\mathcal{M}/\partial R_C = \partial\mathcal{M}/\partial M_C = 0$.

Calculation of the tie-rod deformation contributions.—The deformation component $\beta_1^{\text{tie rod}}$ is calculated as the partial derivative of the strain energy stored in the tie rod with respect to the internal force ($F = R_B$) as shown in figure 3.9(b).

$$\beta_1^{\text{tie rod}} = \frac{\partial U}{\partial R_B} = \frac{1}{A_t E_t}\int_0^{\ell} F\frac{\partial F}{\partial R_B}\,dx$$

since

$$F = R_B \qquad \beta_1^{\text{tie rod}} = \frac{R_B \ell}{A_t E_t} \tag{3.9.11}$$

Deformations $\left(\beta_2^{\text{tie rod}} = \beta_3^{\text{tie rod}} = 0\right)$ because $\dfrac{\partial F}{\partial R_C} = \dfrac{\partial F}{\partial M_C} = 0.$

Total deformations are

$$\beta_1 = \frac{1}{E_b I_b}\left(\frac{R_B L^3}{3} - \frac{q L^4}{8}\right) + \frac{R_B \ell}{A_t E_t}$$

$$\beta_2 = \beta_3 = 0 \tag{3.9.12}$$

Step 5—Express the compatibility conditions in terms of forces: The CC in forces has the following form:

$$\begin{bmatrix} \dfrac{L^3}{3E_b I_b} + \dfrac{\ell}{A_t E_t} & 0 & 0 \end{bmatrix} \begin{Bmatrix} R_B \\ R_C \\ M_C \end{Bmatrix} = \frac{q L^4}{8E_b I_b} \tag{3.9.13}$$

Step 6—Couple the equilibrium equations and compatibility conditions to obtain the IFM equations, and solve for forces: The IFM equation for the problem has the following form:

$$\begin{bmatrix} -1 & -1 & 0 \\ 0 & -L & -1 \\ \dfrac{L^3}{3E_b I_b} + \dfrac{\ell}{A_t E_t} & 0 & 0 \end{bmatrix} \begin{Bmatrix} R_B \\ R_C \\ M_C \end{Bmatrix} = \begin{Bmatrix} -qL \\ -\dfrac{q L^2}{2} \\ \dfrac{q L^4}{8E_b I_b} \end{Bmatrix} \tag{3.9.14}$$

The solution of the IFM equation yields the forces as

$$R_B = \frac{q L^4}{8E_b I_b\left(\dfrac{L^3}{3E_b I_b} + \dfrac{\ell}{A_t E_t}\right)} \tag{3.9.15a}$$

$$R_C = q\left(L - \frac{L^4}{8E_b I_b\left(\dfrac{L^3}{3E_b I_b} + \dfrac{\ell}{A_t E_t}\right)}\right) \tag{3.9.15b}$$

$$M_C = -\frac{q L^2}{2} + \frac{qL^5}{8E_b I_b\left(\dfrac{L^3}{3E_b I_b} + \dfrac{\ell}{A_t E_t}\right)} \tag{3.9.15c}$$

The forces are calculated for the following numerical values: $E_b = 200$ Gpa, $E_t = 70$ Gpa, $L = 3\times10^3$ mm, $\ell = 7.5\times10^3$ mm, $q = 12$ kN/m, $I_b = 20\times10^6$ mm^4, $A_t = 100$ mm^2.

$$R_B = 9.145\,\text{kN}$$

$$R_C = 26.855\ \text{kN}$$

$$M_C = -26.565\ \text{kN-m}$$

Step 7—Back-calculate the displacement, if required, from the deformation displacement relations: The transverse displacement (v) at hinge point B can be calculated as

$$v = -\beta_1 = -\frac{1}{E_b I_b}\left(\frac{R_B L^3}{3} - \frac{q L^4}{8}\right) - \frac{R_B \ell}{A_t E_t} \tag{3.9.16}$$

The first term in equation (3.9.16) represents the contribution from the beam, whereas the second term represents the contribution from the tie rod.

The axial displacement $v^{\text{tie rod}}$ for the tie rod can be determined from its deformation

$$\beta_1^{\text{tie rod}} = \frac{R_B \ell}{AE}$$

or

$$v^{\text{tie rod}} = -\frac{R_B \ell}{A_t E_t} \tag{3.9.17}$$

Substitution of the numerical values yields the displacement $v^{\text{tie rod}} = -9.798$ mm, which represents the stretching of the tie rod.

The transverse displacement for the beam can be calculated from its deformation

$$\beta_1^{\text{beam}} = \frac{1}{E_b I_b}\left(\frac{R_B L^3}{3} - \frac{qL^4}{4}\right)$$

or

$$v^{\text{beam}} = -\frac{1}{E_b I_b}\left(\frac{R_B L^3}{3} - \frac{qL^4}{4}\right) \tag{3.9.18}$$

For the numerical values of the problem, the transverse beam displacement along the negative y-direction becomes

$$v^{\text{beam}} = 9.798\ \text{mm} \tag{3.9.19}$$

The beam and tie rod deform in a consistent manner ($v^{\text{tie rod}} + v^{\text{beam}} = 0$), as expected.

Illustrative Example 10: Three-Bar Truss for Mechanical and Thermal Loads

A three-bar truss made of steel has a Young's modulus E of 30 000 ksi and a coefficient of thermal expansion α of 6.6×10^{-6} per °F (fig. 3.10). The areas of its three bars (A_1, A_2, A_3) are 1.0, 1.0, and 2.0 in.^{2}, respectively. Analyze the truss for the following two load conditions:

Load case 1: Mechanical loads (P_x = 50 kips and P_y = 100 kips) shown in figure 3.10
Load case 2: Two cases of temperature variations

$$\begin{Bmatrix} \Delta T_1 \\ \Delta T_2 \\ \Delta T_3 \end{Bmatrix}_{\text{case 1}} = \begin{Bmatrix} 100.0 \\ 200.0 \\ 300.0 \end{Bmatrix}^{\circ\text{F}} \quad \text{and} \quad \begin{Bmatrix} \Delta T_1 \\ \Delta T_2 \\ \Delta T_3 \end{Bmatrix}_{\text{case 2}} = \begin{Bmatrix} 100.0 \\ -200.0 \\ -300.0 \end{Bmatrix}^{\circ\text{F}} \tag{3.10.1}$$

Here ΔT_i represents variation in temperature for bar i.

Step 0—Solution strategy: A coordinate system (x, y) with its origin at node 1 is shown in figure 3.10(a). The bar forces (F_1, F_2, F_3) are the three force unknowns, or $n = 3$. Only two equilibrium equations can be written along the two displacement directions (X_1, X_2) at node 1, or $m = 2$. The truss is one-degree indeterminate $(r = n - m = 1)$.

Load case 1: Solution for mechanical loads.—

Step 1—Formulate the equilibrium equations: The two EE $([B]\{F\}) = \{P\})$ of the problem are obtained from the force balance condition at the free node 1 along displacements X_1 and X_2, as shown in figure 3.10(b).

$$\begin{bmatrix} 1/\sqrt{2} & 0 & -1/\sqrt{2} \\ -1/\sqrt{2} & -1 & -1/\sqrt{2} \end{bmatrix} \begin{Bmatrix} F_1 \\ F_2 \\ F_3 \end{Bmatrix} = \begin{Bmatrix} P_x \\ P_y \end{Bmatrix} = \begin{Bmatrix} 50 \\ 100 \end{Bmatrix} \tag{3.10.2}$$

The truss is one-degree indeterminate because the two EE have three force unknowns. One CC is required for the analysis of the three-bar truss.

Step 2—Derive the deformation displacement relations: The DDR $(\{\beta\} = [B]^T\{X\})$ of the truss has the following form:

$$\beta_1 = \frac{X_1}{\sqrt{2}} - \frac{X_2}{\sqrt{2}}$$

$$\beta_2 = -X_2$$

$$\beta_3 = -\frac{X_1}{\sqrt{2}} - \frac{X_2}{\sqrt{2}} \tag{3.10.3}$$

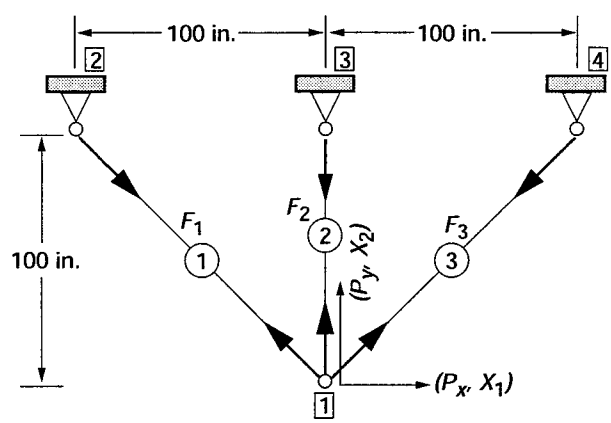

(a) Truss.

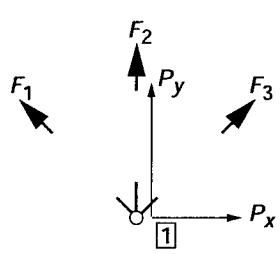

(b) Free-body diagram at node 1.

Figure 3.10.- Analysis of a three-bar truss.

Here, β_1, β_2, and β_3 are the bar deformations corresponding to forces F_1, F_2, and F_3, respectively. The nodal displacements (X_1, X_2) are also the dual variables of the EE.

Step 3—Generate the compatibility condition: The single CC for the problem is obtained by eliminating two displacements from the three DDR:

$$\beta_1 - \sqrt{2}\beta_2 + \beta_3 = 0 \tag{3.10.4}$$

The CC can be written in matrix notation as

$$\begin{bmatrix} 1 & -\sqrt{2} & 1 \end{bmatrix} \begin{Bmatrix} \beta_1 \\ \beta_2 \\ \beta_3 \end{Bmatrix} = 0 \tag{3.10.5}$$

The null property ($[B][C]^T = [0]$) of the EE and CC matrices can be verified as

$$\begin{bmatrix} 1/\sqrt{2} & 0 & -1/\sqrt{2} \\ -1/\sqrt{2} & -1 & -1/\sqrt{2} \end{bmatrix} \begin{bmatrix} 1 \\ -\sqrt{2} \\ 1 \end{bmatrix} = \begin{bmatrix} 0 \\ 0 \end{bmatrix} \tag{3.10.6}$$

Step 4—Formulate the force deformation relations: The FDR for the bars of the truss can be obtained as ($\beta = \ell F/AE$). The lengths of the three bars are $100\sqrt{2}$, 100, and $100\sqrt{2}$ in., and their areas are 1.0, 1.0, and 2.0 in.^{2}, respectively.

$$\beta_1 = \frac{\ell_1 F_1}{A_1 E_1} = \left(\frac{100\sqrt{2}}{E}\right) F_1$$

$$\beta_2 = \frac{100}{E} F_2$$

$$\beta_3 = \frac{50\sqrt{2}}{E} F_3 \tag{3.10.7}$$

Step 5—Express the compatibility conditions in terms of forces: The CC are obtained in terms of forces by eliminating deformations between the CC and FDR:

$$\frac{100\sqrt{2}}{E} \begin{bmatrix} 1 & -1 & 1/2 \end{bmatrix} \begin{Bmatrix} F_1 \\ F_2 \\ F_3 \end{Bmatrix} = \{0\} \tag{3.10.8}$$

Step 6—Couple the equilibrium equations and compatibility conditions to obtain the IFM equations, and solve for forces:

$$\begin{bmatrix} 1/\sqrt{2} & 0 & -1/\sqrt{2} \\ -1/\sqrt{2} & -1 & -1/\sqrt{2} \\ 1 & -1 & 1/2 \end{bmatrix} \begin{Bmatrix} F_1 \\ F_2 \\ F_3 \end{Bmatrix} = \begin{Bmatrix} 50 \\ 100 \\ 0 \end{Bmatrix} \tag{3.10.9}$$

Solution of the IFM equation yields the forces as

$$\begin{Bmatrix} F_1 \\ F_2 \\ F_3 \end{Bmatrix} = -\begin{Bmatrix} 5.025 \\ 42.893 \\ 75.736 \end{Bmatrix}_{\text{kips}} \tag{3.10.10}$$

Step 7—Back-calculate the displacement, if required, from the deformation displacement relations:

$$X_2 = -\beta_2 = -\frac{100F_2}{E} = 0.143 \text{ in.}$$

$$X_1 = \sqrt{2}\beta_1 - \beta_2 = \frac{100}{E}(2F_1 - F_2) = 0.110 \text{ in.} \tag{3.10.11}$$

Load case 2: Solution for thermal loads.—Thermal analysis requires the inclusion of nontrivial $\{\delta R\}$ in the right side of the CC:

$$\{\delta R\} = -[C]\{\beta\}^0 \tag{3.10.12}$$

where

$$\{\beta\}^0 = \begin{Bmatrix} \beta_1^0 \\ \beta_2^0 \\ \beta_3^0 \end{Bmatrix} = \alpha \begin{Bmatrix} \Delta T_1 \ell_1 \\ \Delta T_2 \ell_2 \\ \Delta T_3 \ell_3 \end{Bmatrix}$$

$$\{\delta R\} = -\begin{bmatrix} 1 & -\sqrt{2} & 1 \end{bmatrix} \alpha \begin{Bmatrix} \Delta T_1 \ell_1 \\ \Delta T_2 \ell_2 \\ \Delta T_3 \ell_3 \end{Bmatrix}$$

or

$$\{\delta R\} = -100\sqrt{2}\alpha\,(\Delta T_1 - \Delta T_2 + \Delta T_3)$$

$$\{\delta R\}_{\text{case 1}} = -0.187 \tag{3.10.13a}$$

Likewise, the $\{\delta R\}$ calculated for the temperature increase for case 2 becomes

$$\{\delta R\}_{\text{case 2}} = 0 \tag{3.10.13b}$$

The nontrivial thermal distribution for case 2 represents a compatible temperature distribution that does not induce any stress. For thermal distribution case 1, the IFM equation can be rewritten to include the $\{\delta R\}$ term as follows:

$$\begin{bmatrix} 1/\sqrt{2} & 0 & -1/\sqrt{2} \\ -1/\sqrt{2} & -1 & -1/\sqrt{2} \\ 1 & -1 & 1/2 \end{bmatrix} \begin{Bmatrix} F_1 \\ F_2 \\ F_3 \end{Bmatrix} = \begin{Bmatrix} 0 \\ 0 \\ -39.6 \end{Bmatrix} \tag{3.10.14}$$

The compatibility condition in equation (3.10.14) has been scaled with respect to $100\sqrt{2}\,/\,E$, see equation (3.10.8). Solution of the IFM equation yields forces as

$$\begin{Bmatrix} F_1 \\ F_2 \\ F_3 \end{Bmatrix} = \begin{Bmatrix} -13.59 \\ 19.22 \\ -13.59 \end{Bmatrix}_{\text{kips}} \tag{3.10.15}$$

Calculation of displacement.—Displacement can be calculated from the DDR as

$$X_1 = \sqrt{2}\,\beta_1 - \beta_2$$

$$\beta_1 = \beta_1^e + \beta_1^t \quad \text{and} \quad \beta_2 = \beta_2^e + \beta_2^t$$

upon substitution,

$$X_1 = -0.155 \text{ in.} \tag{3.10.16}$$

$$X_2 = -\beta_2 = -\left(\beta_2^e + \beta_2^t\right) = -0.196 \text{ in.} \tag{3.10.17}$$

The compatible temperature distribution thermal load case 2, produces trivial forces ($F_1 = F_2 = F_3 = 0$) but nonzero displacements, which are also calculated from the DDR:

$$\{\beta\} = \{\beta\}^e + \{\beta\}^t = \{\beta\}^t = \begin{Bmatrix} 0.0933 \\ -0.1320 \\ -0.2800 \end{Bmatrix} \tag{3.10.18}$$

$$X_1 = \sqrt{2}\,\beta_1^t - \beta_2^t = 0.264 \text{ in.}$$

$$X_2 = \beta_2^t = 0.132 \text{ in.} \tag{3.10.19}$$

Illustrative Example 11: Six-Bar Truss for Mechanical and Thermal Loads

The six-bar truss shown in figure 3.11 is made of aluminum with a Young's modulus E of 10×10^3 ksi and a coefficient of thermal expansion α of 6.0×10^{-6} per °F. The cross-sectional areas of members 1, 3, 5, and 6 are 1 in.^{2}, and those of members 2 and 4 are $1/\sqrt{2}$ in.^{2} Analyze the truss for forces and displacements for the following two load cases:

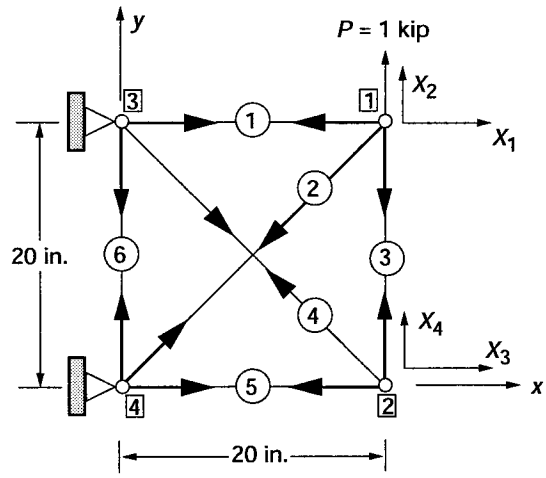

Figure 3.11.- Six-bar truss.

Load case 1: Mechanical load $P = 1$ kip at node 1 along the y-direction
Load case 2: Temperature increase $\Delta T = 100$ °F (for member 3 only)

Step 0—Solution strategy: The coordinate system (x, y) with its origin at node 4 is shown in figure 3.11. The six forces in the six bars are the force unknowns, or $n = 6$. Tensile bar forces are assumed positive. Nodes 2 and 3, which are free, with displacements X_1, X_2, X_3, and X_4, as shown in figure 3.11, yield four EE, or $m = 4$. The truss is two-degrees indeterminate ($r = n - m = 2$). From observation, we can conclude that the force in the sixth bar $F_6 = 0$, which, a priori, will not be assumed.

Load case 1: Solution for mechanical loads.—

Step 1—Formulate the equilibrium equations: Forces in the six truss members (1, 2, . . . , 6) are designated $F_1, F_2, \ldots, F_6$. Four EE at nodes 1 and 2 can be written along the displacement directions (X_1, X_2, X_3, X_4). In matrix notation, the EE becomes

$$\begin{bmatrix} 1 & 1/\sqrt{2} & 0 & 0 & 0 & 0 \\ 0 & 1/\sqrt{2} & 1 & 0 & 0 & 0 \\ 0 & 0 & 0 & 1/\sqrt{2} & 1 & 0 \\ 0 & 0 & -1 & -1/\sqrt{2} & 0 & 0 \end{bmatrix} \begin{Bmatrix} F_1 \\ F_2 \\ F_3 \\ F_4 \\ F_5 \\ F_6 \end{Bmatrix} = \begin{Bmatrix} 0 \\ 1000 \\ 0 \\ 0 \end{Bmatrix} \tag{3.11.1}$$

The sixth column, which is null, in the EE matrix corresponds to the fully restrained force in the sixth bar. Since the four EE are expressed in terms of six forces; two CC are required for the solution.

Step 2—Derive the deformation displacement relations: The six DDR ($\{\beta\} = [B]^T\{X\}$) have the following form:

$$\beta_1 = X_1 \qquad \beta_4 = \frac{(X_3 - X_4)}{\sqrt{2}}$$

$$\beta_2 = \frac{(X_1 + X_2)}{\sqrt{2}} \qquad \beta_5 = X_3$$

$$\beta_3 = X_2 - X_4 \qquad \beta_6 = 0 \tag{3.11.2}$$

Step 3—Generate the compatibility conditions: The two CC, which are obtained by eliminating the four displacements from the six DDR, can be written in matrix notation as

$$\begin{bmatrix} 0 & 0 & 0 & 0 & 0 & 1 \\ 1 & -\sqrt{2} & 1 & -\sqrt{2} & 1 & 0 \end{bmatrix} \begin{Bmatrix} \beta_1 \\ \beta_2 \\ \beta_3 \\ \beta_4 \\ \beta_5 \\ \beta_6 \end{Bmatrix} \tag{3.11.3}$$

The first CC specifies that $\beta_6 = 0$ is zero because member 6 is restrained at both ends and cannot deform. The null property ($[B][C]^T = [0]$) can be verified from the one EE and the CC matrices as

$$\begin{bmatrix} 1 & 1/\sqrt{2} & 0 & 0 & 0 & 0 \\ 0 & 1/\sqrt{2} & 1 & 0 & 0 & 0 \\ 0 & 0 & 0 & 1/\sqrt{2} & 1 & 0 \\ 0 & 0 & -1 & -1/\sqrt{2} & 0 & 0 \end{bmatrix} \begin{bmatrix} 0 & 1 \\ 0 & -\sqrt{2} \\ 0 & 1 \\ 0 & -\sqrt{2} \\ 0 & 1 \\ 1 & 0 \end{bmatrix} = \begin{bmatrix} 0 & 0 \\ 0 & 0 \\ 0 & 0 \\ 0 & 0 \end{bmatrix} \tag{3.11.4}$$

Step 4—Formulate the force deformation relations: The FDR $\beta = F\ell/AE$ for the six truss members are as follows:

$$\beta_1 = \frac{\ell_1 F_1}{A_1 E_1} = \frac{20F_1}{E} \qquad \beta_4 = \frac{40F_4}{E}$$

$$\beta_2 = \frac{40F_2}{E} \qquad \beta_5 = \frac{20F_5}{E}$$

$$\beta_3 = \frac{20F_3}{E} \qquad \beta_6 = \frac{20F_6}{E} \tag{3.11.5}$$

Step 5—Express the compatibility conditions in terms of forces: The CC is expressed in forces by eliminating deformations between the CC and FDR to obtain

$$\frac{20}{E}\begin{bmatrix} 0 & 0 & 0 & 0 & 0 & 1 \\ 1 & -2\sqrt{2} & 1 & -2\sqrt{2} & 1 & 0 \end{bmatrix} \begin{Bmatrix} F_1 \\ F_2 \\ F_3 \\ F_4 \\ F_5 \\ F_6 \end{Bmatrix} = \begin{Bmatrix} 0 \\ 0 \end{Bmatrix} \tag{3.11.6}$$

Step 6—Couple the equilibrium equations and compatibility conditions to obtain the IFM equations, and solve for forces:

$$\begin{bmatrix} 1 & 1/\sqrt{2} & 0 & 0 & 0 & 0 \\ 0 & 1/\sqrt{2} & 1 & 0 & 0 & 0 \\ 0 & 0 & 0 & 1/\sqrt{2} & 1 & 0 \\ 0 & 0 & -1 & -1/\sqrt{2} & 0 & 0 \\ 0 & 0 & 0 & 0 & 0 & 1 \\ 1 & -2\sqrt{2} & 1 & -2\sqrt{2} & 1 & 0 \end{bmatrix} \begin{Bmatrix} F_1 \\ F_2 \\ F_3 \\ F_4 \\ F_5 \\ F_6 \end{Bmatrix} = \begin{Bmatrix} 0 \\ 1000 \\ 0 \\ 0 \\ 0 \\ 0 \end{Bmatrix} \tag{3.11.7}$$

Solution of the IFM equation yields the forces:

$$\begin{Bmatrix} F_1 \\ F_2 \\ F_3 \\ F_4 \\ F_5 \\ F_6 \end{Bmatrix} = \begin{Bmatrix} -545.5 \\ 771.4 \\ 454.5 \\ -642.8 \\ 454.5 \\ 0.0 \end{Bmatrix}_{\text{lb}} \tag{3.11.8}$$

Step 7—Back-calculate the displacement, if required, from the deformation displacement relations:

$$X_1 = \beta_1 = \frac{20F_1}{E} = -1.090 \times 10^{-3}\,\text{in.}$$

$$X_2 = -\beta_1 + \sqrt{2}\beta_2 = -\frac{20}{E}\left(F_1 - 2\sqrt{2}F_2\right) = 5.454 \times 10^{-3}\,\text{in.}$$

$$X_3 = \beta_5 = \frac{20F_5}{E} = 0.909 \times 10^{-3}\,\text{in.}$$

$$X_4 = -\left(\beta_1 - \sqrt{2}\beta_2 + \beta_3\right) = -\frac{20}{E}\left(F_1 - 2\sqrt{2}F_2 + F_3\right) = 4.545 \times 10^{-3}\,\text{in.} \tag{3.11.9}$$

Load case 2: Solution for thermal loads.—Only the right side of the CC, $\{\delta R\}$, has to be modified for thermal analysis:

$$\{\delta_R\} = -[C]\{\beta\}^0$$

$$\{\beta\}^0 = \begin{Bmatrix} 0 \\ 0 \\ \alpha\ell\,\Delta T \\ 0 \\ 0 \\ 0 \end{Bmatrix}$$

$$\{\delta R\} = -[C]\{\beta\}^0 = -\begin{bmatrix} 0 & 0 & 0 & 0 & 0 & 1 \\ 1 & -\sqrt{2} & 1 & -\sqrt{2} & 1 & 0 \end{bmatrix} \begin{Bmatrix} 0 \\ 0 \\ \alpha\ell\,\Delta T \\ 0 \\ 0 \\ 0 \end{Bmatrix}$$

$$\{\delta R\} = \begin{Bmatrix} 0 \\ -\alpha\ell\,\Delta T \end{Bmatrix} = \begin{Bmatrix} 0 \\ -1.20\times10^{-2} \end{Bmatrix} \tag{3.11.10}$$

For thermal loads only, the IFM equations can be written as

$$\begin{bmatrix} 1 & 1/\sqrt{2} & 0 & 0 & 0 & 0 \\ 0 & 1/\sqrt{2} & 1 & 0 & 0 & 0 \\ 0 & 0 & 0 & 1/\sqrt{2} & 1 & 0 \\ 0 & 0 & -1 & -1/\sqrt{2} & 0 & 0 \\ 0 & 0 & 0 & 0 & 0 & 1 \\ 1 & -2\sqrt{2} & 1 & -2\sqrt{2} & 1 & 0 \end{bmatrix} \begin{Bmatrix} F_1 \\ F_2 \\ F_3 \\ F_4 \\ F_5 \\ F_6 \end{Bmatrix} = \begin{Bmatrix} 0 \\ 0 \\ 0 \\ 0 \\ 0 \\ -6.0\times10^3 \end{Bmatrix} \tag{3.11.11}$$

The $\{\delta R\}$ in equation (3.11.11) is normalized with respect to $20/E$ (see eq. (3.11.6)). Forces due to $\Delta T = 100$ °F in member 3 are obtained by solving the IFM equation as

$$\begin{Bmatrix} F_1 \\ F_2 \\ F_3 \\ F_4 \\ F_5 \\ F_6 \end{Bmatrix} = \begin{Bmatrix} -545.45 \\ 771.39 \\ -545.45 \\ 771.39 \\ -545.45 \\ 0 \end{Bmatrix}_{\text{lb}} \tag{3.11.12}$$

Calculation of displacements.—Displacements at the nodes are calculated from the DDR as follows:

$$X_1 = \beta_1 = \beta_1^e + \beta_1^t$$

$$\beta_1^e = \left(\frac{\ell F}{AE}\right)_1 = -1.090 \times 10^{-3}$$

$$\beta_1^t = 0$$

$$X_1 = -1.090 \times 10^{-3}\,\text{in.} \tag{3.11.13}$$

Likewise, other displacements can be calculated:

$$\begin{Bmatrix} X_1 \\ X_2 \\ X_3 \\ X_4 \end{Bmatrix} = \begin{Bmatrix} \beta_1 \\ -\beta_1 + \sqrt{2}\beta_2 \\ \beta_5 \\ -\left(\beta_1 - \sqrt{2}\beta_2 + \beta_3\right) \end{Bmatrix} = \begin{Bmatrix} -1.091 \\ 5.454 \\ -1.091 \\ -5.454 \end{Bmatrix} \times 10^{-3}\,\text{in.} \tag{3.11.14}$$

Illustrative Example 12: A Ring Problem

A uniform circular ring of radius R, moment of inertia I, and Young's modulus E is subjected to self-equilibrating forces as shown in figure 3.12(a). Determine the bending moment, axial force, and vertical displacement at A.

Step 0—Solution strategy: For the ring, the polar coordinates ($r = R$, θ) shown in figure 3.12(a) are used. Only half of the ring needs to be considered because of symmetry. The free-body diagram of the half ring is shown in figure 3.12(b). The internal forces acting on the ring depicted in figure 3.12(b) at location B are the normal force N_B, shear force V_B, and moment M_B; and at location A they are the normal force N_A, shear force $V_A = P/2$, and moment M_A. The value for $V_A = P/2$ is obtained from equilibrium considerations, (see fig. 3.13(c)). There are five unknown forces (N_A, M_A, N_B, V_B, M_B) but only three EE ($\Sigma N = 0$, $\Sigma V = 0$, $\Sigma M = 0$) can be written, so the problem is two-degrees indeterminate.

Step 1—Formulate the equilibrium equations: The three EE are as follows:

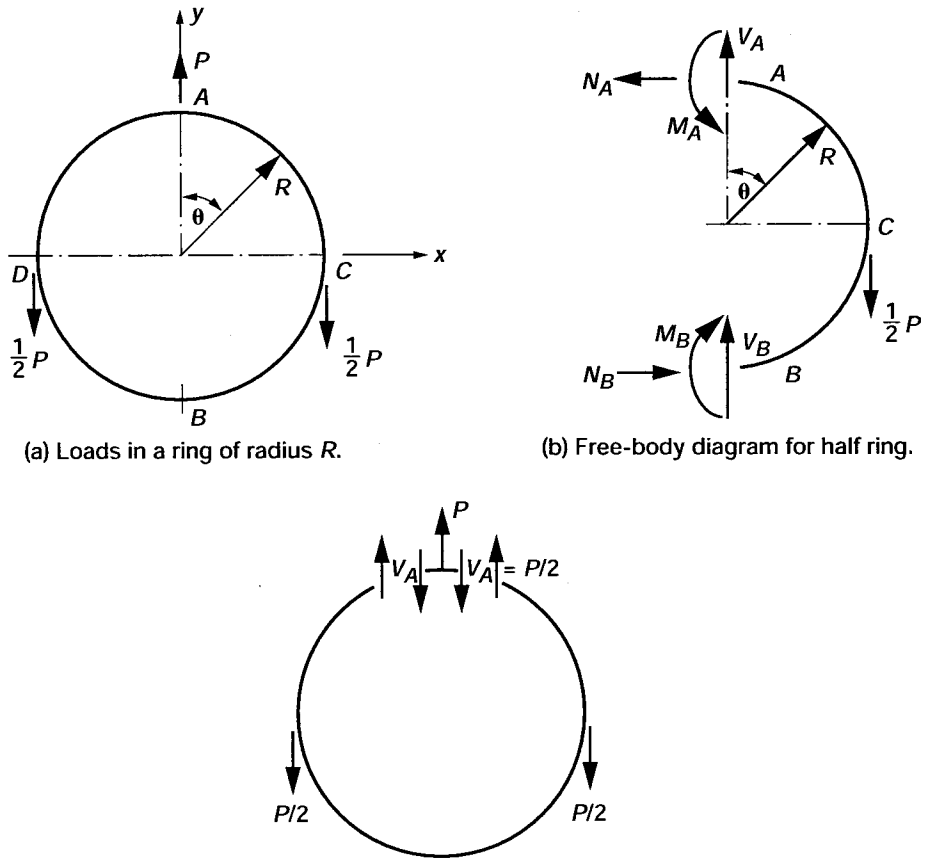

(a) Loads in a ring of radius *R*.

(b) Free-body diagram for half ring.

(c) Transverse *EE* at *A*.

Figure 3.12.- A ring problem.

$$\sum_x N = 0 \qquad N_B - N_A = 0 \quad \text{or} \quad N_A = N_B$$

$$\sum_y V = 0 \qquad V_B - \frac{P}{2} + \frac{P}{2} = 0 \quad \text{or} \quad V_B = 0$$

$$\sum M = 0 \text{ at } A \qquad M_A - \frac{PR}{2} - M_B + N_B(2R) = 0 \tag{3.12.1}$$

The first two EE ($\Sigma N = 0$ and $\Sigma V = 0$) are trivial in nature. The moment EE in matrix notation can be written as follows:

$$\begin{bmatrix} -1 & -2R & 1 \end{bmatrix} \begin{Bmatrix} M_A \\ N_A \\ M_B \end{Bmatrix} = \left\{ -\frac{PR}{2} \right\} \tag{3.12.2}$$

Two CC are required for the determination of forces. Rotation φ is considered to be the dual, or displacement, variable of the EE.

Step 2—Derive the deformation displacement relations: The three DDR for the problem are

$$\beta_1 = -\varphi$$

$$\beta_2 = -2R\varphi$$

$$\beta_3 = \varphi \tag{3.12.3}$$

The deformations (β_1, β_2, β_3) correspond to the forces (M_A, N_B, M_B), respectively.

Step 3—Generate the compatibility conditions: Two CC are obtained by eliminating the rotation φ from the three DDR:

$$\beta_2 - 2R\beta_1 = 0$$

$$\beta_2 + 2R\beta_3 = 0 \tag{3.12.4}$$

In matrix notation, the CC can be written as

$$\begin{bmatrix} -2R & 1 & 0 \\ 0 & 1 & 2R \end{bmatrix} \begin{Bmatrix} \beta_1 \\ \beta_2 \\ \beta_3 \end{Bmatrix} = \begin{Bmatrix} 0 \\ 0 \end{Bmatrix} \tag{3.12.5}$$

The null property of the $[B]$ and $[C]$ matrices ($[B][C]^T = [0]$) can be verified as

$$\begin{bmatrix} -1 & -2R & 1 \end{bmatrix} \begin{bmatrix} -2R & 0 \\ 1 & 1 \\ 0 & 2R \end{bmatrix} = \begin{bmatrix} 0 & 0 \end{bmatrix} \tag{3.12.6}$$

Step 4—Formulate the force deformation relations: The FDR for the ring can be determined as

$$\beta_1 = \frac{R}{EI} \int_0^{\pi} \mathcal{M} \frac{\partial \mathcal{M}}{\partial M_A} d\theta$$

$$\beta_2 = \frac{R}{EI} \int_0^{\pi} \mathcal{M} \frac{\partial \mathcal{M}}{\partial N_A} d\theta$$

$$\beta_3 = \frac{R}{EI} \int_0^{\pi} \mathcal{M} \frac{\partial \mathcal{M}}{\partial M_B} d\theta \tag{3.12.7}$$

The bending moment for the problem can be defined in ranges AC and CB as follows:

$$\mathcal{M}(\theta) = M_A + N_A R(1-\cos\theta) - \frac{PR}{2}\sin\theta \quad \left(\text{in the range } AC,\ 0 \le \theta \le \frac{\pi}{2}\right)$$

$$\mathcal{M}(\theta) = M_A + N_A R(1-\cos\theta) - \frac{PR}{2} \quad \left(\text{in the range } CB,\ \frac{\pi}{2} \le \theta \le \pi\right)$$

$$\frac{\partial \mathcal{M}}{\partial M_A} = 1 \quad (\text{for both ranges, } 0 \le \theta \le \pi)$$

$$\frac{\partial \mathcal{M}}{\partial N_A} = R(1-\cos\theta) \quad (\text{for both ranges, } 0 \le \theta \le \pi)$$

$$\frac{\partial \mathcal{M}}{\partial M_B} = 0 \quad (\text{for both ranges, } 0 \le \theta \le \pi) \tag{3.12.8}$$

$$\beta_1 = \frac{R}{EI}\left[\int_0^{\pi/2}\left\{M_A + N_A R(1-\cos\theta) - \frac{PR}{2}\sin\theta\right\}(1)\,d\theta + \int_{\pi/2}^{\pi}\left\{M_A + N_A R(1-\cos\theta) - \frac{PR}{2}\right\}(1)\,d\theta\right] \tag{3.12.9a}$$

or

$$\beta_1 = \frac{R}{EI}\left\{\pi M_A + \pi R N_A - \frac{PR}{2}\left(1+\frac{\pi}{2}\right)\right\} \tag{3.12.9b}$$

Likewise, β_2 is obtained as

$$\beta_2 = \frac{R^2}{EI}\left\{\pi M_A + \frac{3\pi}{2} R N_A - \frac{PR}{4}(3+\pi)\right\}$$

$$\beta_3 = 0 \tag{3.12.10}$$

Step 5—Express the compatibility conditions in terms of forces: Since $\beta_3 = 0$, the two CC in deformations become uncoupled equations as

$$\beta_1 = 0 \quad \text{and} \quad \beta_2 = 0 \tag{3.12.11}$$

The CC in forces can be written as

$$\begin{bmatrix} \pi & \pi R & 0 \\ \pi & \frac{3\pi R}{2} & 0 \end{bmatrix} \begin{Bmatrix} M_A \\ N_A \\ M_B \end{Bmatrix} = \begin{Bmatrix} \frac{PR}{2}\left(1+\frac{\pi}{2}\right) \\ \frac{PR}{4}(3+\pi) \end{Bmatrix} \tag{3.12.12}$$

Step 6—Couple the equilibrium equations and compatibility conditions to obtain the IFM equations, and solve for forces:

$$\begin{bmatrix} -1 & -2R & 1 \\ \pi & \pi R & 0 \\ \pi & \dfrac{3\pi R}{2} & 0 \end{bmatrix} \begin{Bmatrix} M_A \\ N_A \\ M_B \end{Bmatrix} = \frac{PR}{2} \begin{Bmatrix} -1 \\ \left(1+\dfrac{\pi}{2}\right) \\ \left(\dfrac{3+\pi}{2}\right) \end{Bmatrix} \tag{3.12.13}$$

Solving the IFM equation yields the forces:

$$\begin{Bmatrix} M_A \\ N_A \\ M_B \end{Bmatrix} = \begin{Bmatrix} \dfrac{PR}{4} \\ \dfrac{P}{2\pi} \\ PR\left(\dfrac{1}{\pi}-\dfrac{1}{4}\right) \end{Bmatrix} \tag{3.12.14}$$

Other forces can be back-calculated as $N_B = N_A = P/2\pi$ and $V_B = 0$.

Step 7—Back-calculate the displacement, if required, from the deformation displacement relations: We bypassed formulating a shear equilibrium equation at load application point A for the calculation of forces. This EE is reinstated for the displacement calculation because the dual variable of this EE represents the displacement along load P. The transverse EE at A is

$$2V_A = P \qquad \text{or} \qquad V_A = \frac{P}{2} \tag{3.12.15}$$

The DDR for this EE can be written as

$$\beta_v = 2v_A \tag{3.12.16}$$

where v_A is the dual variable of the EE representing the transverse displacement at the load application point. The deformation corresponding to the shear force V_A can be calculated as

$$\beta_v = \frac{\partial U}{\partial V_A} = \frac{R}{EI}\int_0^{2\pi} \mathcal{M}\frac{\partial \mathcal{M}}{\partial V_A}\,d\theta \tag{3.12.17}$$

Because of symmetry,

$$\beta_v = 2v_A = \frac{2R}{EI}\int_0^{\pi} \mathcal{M}\frac{\partial \mathcal{M}}{\partial V_A}\,d\theta \tag{3.12.18a}$$

or

$$v_A = \frac{R}{EI}\int_0^{\pi} \mathcal{M}\frac{\partial \mathcal{M}}{\partial V_A}\,d\theta \tag{3.12.18b}$$

$$\frac{\partial \mathcal{M}}{\partial V_A} = \frac{2\partial \mathcal{M}}{\partial P}$$

$$\frac{\partial \mathcal{M}}{\partial P} = -\frac{R}{2}\sin\theta \quad \left(\text{In the range } AC,\ 0 \le \theta \le \frac{\pi}{2}\right)$$

$$\frac{\partial \mathcal{M}}{\partial P} = -\frac{R}{2} \quad \left(\text{In the range } CB,\ \frac{\pi}{2} \le \theta \le \pi\right) \tag{3.12.19}$$

$$v_A = \frac{R}{EI}\int_0^{\pi} 2\mathcal{M}\frac{\partial \mathcal{M}}{\partial P}\,d\theta = \frac{R}{EI}\int_0^{\pi/2} 2\mathcal{M}\left(-R\frac{\sin\theta}{2}\right)d\theta + \frac{R}{EI}\int_{\pi/2}^{\pi} 2\mathcal{M}\left(-\frac{R}{2}\right)d\theta$$

By integrating we obtain

$$v_A = \frac{PR^3}{2EI}\left(\frac{\pi}{2} - 1 - \frac{3}{2\pi}\right) \tag{3.12.20}$$

From the condition of symmetry, other two displacements at A (see fig. 3.12(b)), u_A (displacement along N_A), and φ_A (rotation at A) are zero.

or

$$\begin{Bmatrix} v_A \\ u_A \\ \varphi_A \end{Bmatrix} = \frac{PR^3}{2EI}\begin{Bmatrix} \frac{\pi}{2} - 1 - \frac{3}{2\pi} \\ 0 \\ 0 \end{Bmatrix} \tag{3.12.21}$$

Illustrative Example 13: Three-Span Beam Under a Distributed Load

A three-span continuous beam made of a single material and under a uniformly distributed load is depicted in figure 3.13(a). Each span has a length ℓ, a uniform EI, and a load intensity q per unit length. Analyze the beam for moment and displacement.

Step 0—Solution strategy: The coordinate system (x, y) with its origin at A is shown in figure 3.13(a). Four reactions (R_A, R_B, R_C, R_D) are considered as the force unknowns of the problem, or $n = 4$. Two independent EE (one transverse EE, $\Sigma V = 0$, and one rotational EE, $\Sigma M = 0$) can be written, or $m = 2$. The beam is two-degrees indeterminate ($r = n - m = 2$). We can, however, use the symmetry condition ($R_A = R_D$ and $R_B = R_C$) to reduce it to a two-variable problem. This two-variable problem has one independent EE and one CC.

Calculation of shear force: Shear forces at the left and right of support B $\left(V_B^{\ell}, V_B^{r}\right)$ and, likewise, at support C $\left(V_C^{\ell}, V_C^{r}\right)$ are defined. These force shear forces can be calculated from the diagrams shown in figure 3.13(b). From figure 3.13(b) we can write

$$R_A + V_B^{\ell} = q\ell \qquad \text{or} \qquad V_B^{\ell} = q\ell - R_A$$

$$R_A + R_B + V_B^{r} = q\ell \qquad \text{or} \qquad V_B^{r} = q\ell - R_A - R_B$$

Likewise, V_C^{ℓ} and V_C^{r} can be calculated as

$$V_C^{\ell} = 2q\ell - R_A - R_B$$

$$V_C^{r} = 2q\ell - R_A - 2R_B$$

The free-body diagram for the beam with the shear forces is depicted in figure 3.13(c).

Step 1—Formulate the equilibrium equations: The transverse EE along the y-direction yields

$$2R_A + 2R_B = 3q\ell \tag{3.13.1}$$

The reader can verify that the moment equilibrium is automatically satisfied.

In matrix notation, the EE can be written as

$$\begin{bmatrix} -1 & -1 \end{bmatrix} \begin{Bmatrix} R_A \\ R_B \end{Bmatrix} = \left\{ -\frac{3q\ell}{2} \right\} \tag{3.13.2}$$

The single EE is expressed in terms of two unknowns (R_A, R_B). Thus, one CC is required to solve the problem.

Step 2—Derive the deformation displacement relations: The DDR ($\{\beta\} = [B]^T\{X\}$) for the problem has the following form:

$$\beta_1 = -X$$

$$\beta_2 = -X \tag{3.13.3}$$

Here, β_1 and β_2 are the deformations associated with reactions R_A and R_B, respectively. The dual variable of the EE is the displacement X.

Step 3—Generate the compatibility condition: The single CC is obtained by eliminating the displacement X from the two DDR as

$$\beta_1 - \beta_2 = 0 \tag{3.13.4a}$$

or in matrix notation,

$$\begin{bmatrix} 1 & -1 \end{bmatrix} \begin{Bmatrix} \beta_1 \\ \beta_2 \end{Bmatrix} = \{0\} \tag{3.13.4b}$$

The correctness of the CC is verified from its null property ($[B][C]^T = [0]$) as

$$\begin{bmatrix} -1 & -1 \end{bmatrix} \begin{bmatrix} 1 \\ -1 \end{bmatrix} = [0]$$

Step 4—Formulate the force deformation relations: For the calculation of the FDR, the free-body diagram shown in figure 3.13(c) is considered. The bending moments required to calculate the deformation are obtained for the three spans separately. For simplicity, local coordinates are used for the FDR calculation because these are independent of the coordinates.

Span AB: The free-body diagram of the span with moment, shear force, and external loads is shown in figure 13(c). The force equilibrium for the span can be verified by summation of the forces and moments. One can determine the bending moment ($\mathcal{M}_f$) for the first span AB by considering a local coordinate x_f, with the origin at A and the axis measuring from A to B as shown in figure 3.13(d).

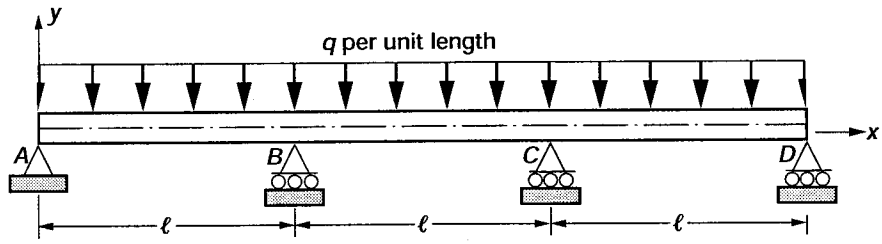

(a) Three-span beam.

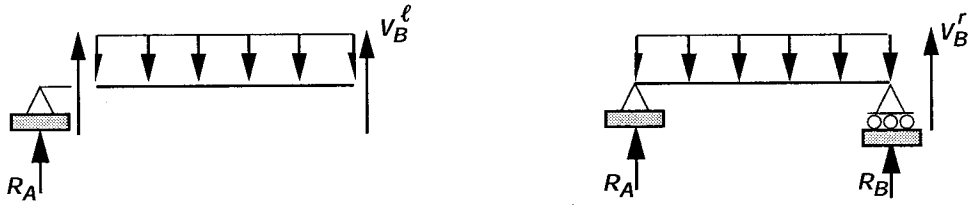

(b) Shear force to the left and right of support *B*.

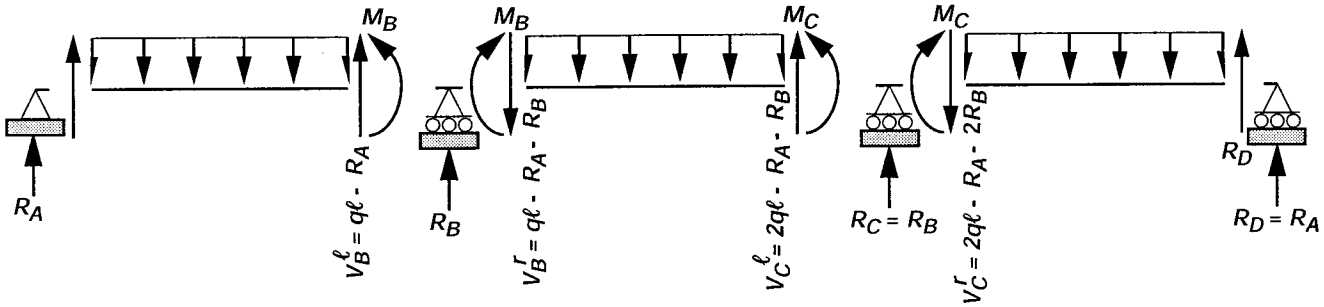

(c) Free-body diagram for the beam.

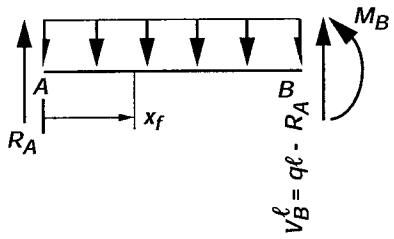

(d) Free-body diagram for the first span, *AB*.

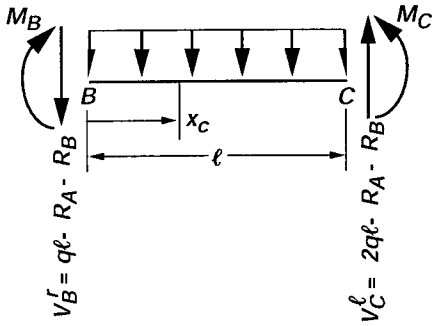

(e) Free-body diagram for the second span, *BC*.

Figure 3.13.- Three-span beam under distributed load.

$$\mathcal{M}_f = R_A x_f - \frac{q x_f^2}{2} \tag{3.13.5a}$$

Moment at B:

$$M_B = R_A \ell - \frac{q\ell^2}{2} \tag{3.13.5b}$$

Shear force at B:

$$V_B^{\ell} = q\ell - R_A$$

$$\frac{\partial \mathcal{M}_f}{\partial R_A} = x_f \quad \text{and} \quad \frac{\partial \mathcal{M}_f}{\partial R_B} = 0 \tag{3.13.5c}$$

Span BC: For the central span BC, the local coordinate system (x_c) is selected with its origin at B as shown in figure 3.13(e).

Moment at C: Because of symmetry, $M_C = M_B = R_A \ell - \frac{q\ell^2}{2}$

Shear force at C: $V_C^{\ell} = 2q\ell - R_A - R_B$

The moment function for span BC becomes

$$\mathcal{M}_c = M_B - (ql - R_A - R_B)x_c - \frac{q x_c^2}{2}$$

or

$$\mathcal{M}_c = R_A(\ell + x_c) + R_B x_c - \frac{q}{2}\left(\ell^2 + x_c^2 + 2\ell x_c\right)$$

$$\frac{\partial \mathcal{M}_c}{\partial R_A} = (\ell + x_c) \quad \text{and} \quad \frac{\partial \mathcal{M}_c}{\partial R_B} = x_c \tag{3.13.6}$$

Because of symmetry, span CD (which is identical to span AB) need not be considered separately.

The deformations β_1 and β_2 can be written as

$$\beta_1 = \frac{1}{EI}\left\{2\int_{\text{Span } AB} \mathcal{M}_f \frac{\partial \mathcal{M}_f}{\partial R_A} dx + \int_{\text{Span } BC} \mathcal{M}_c \frac{\partial \mathcal{M}_c}{\partial R_A} dx\right\} = 2\beta_1^{AB} + \beta_1^{BC}$$

$$\beta_2 = \frac{1}{EI}\left\{2\int \mathcal{M}_f \frac{\partial \mathcal{M}_f}{\partial R_B} dx + \int \mathcal{M}_c \frac{\partial \mathcal{M}_c}{\partial R_B} dx\right\} = 2\beta_2^{AB} + \beta_2^{BC} \tag{3.13.7}$$

The contribution to the deformation β_i from span CD is accounted for by doubling the value for span AB because the first and last spans are symmetrical. Upon integration, the contribution from the first span, or the deformation component β_1^{AB}, is obtained as

$$\beta_1^{AB} = \frac{1}{EI}\left(\frac{R_A \ell^3}{3} - \frac{q\ell^4}{8}\right) \tag{3.13.8}$$

Likewise, the contribution from the central span, or the deformation component β_1^{BC} , is obtained as

$$\beta_1^{BC} = \left(\frac{1}{EI}\right)\left(\frac{7R_A\ell^3}{3} + \frac{5R_B\ell^3}{6} - \frac{15q\ell^4}{8}\right) \tag{3.13.9}$$

Total deformation β_1 is obtained by adding the contributions from the three spans:

$$\beta_1 = \frac{1}{EI}\left(3R_A\ell^3 + \frac{5R_B\ell^3}{6} - \frac{17q\ell^4}{8}\right) \tag{3.13.10}$$

Likewise, deformation β_2 can be calculated as

$$\beta_2 = \frac{1}{EI}\left(\frac{5R_A\ell^3}{6} + \frac{R_B\ell^3}{3} - \frac{17q\ell^4}{24}\right) \tag{3.13.11}$$

In the calculation of deformation β_2, there is no contribution $\beta_2^{AB} = 0$ from the first (or third) spans because $\partial\mathcal{M}_c/\partial R_B = 0$. In other words, the reaction R_B at support B is not present explicitly in the moment function $\mathcal{M}_f$.

In matrix notation, the deformation force relations can be written as

$$\begin{Bmatrix} \beta_1 \\ \beta_2 \end{Bmatrix} = \frac{\ell^3}{EI}\begin{bmatrix} 3 & \frac{5}{6} \\ \frac{5}{6} & \frac{1}{3} \end{bmatrix}\begin{Bmatrix} R_A \\ R_B \end{Bmatrix} - \frac{q\ell^4}{EI}\begin{Bmatrix} \frac{17}{8} \\ \frac{17}{24} \end{Bmatrix} \tag{3.13.12}$$

Step 5—Express the compatibility conditions in terms of reactions: In terms of reactions, the CC ($\beta_1 - \beta_2 = 0$) can be written as

$$\begin{bmatrix} \frac{13}{6} & \frac{1}{2} \end{bmatrix}\begin{Bmatrix} R_A \\ R_B \end{Bmatrix} = \begin{Bmatrix} \frac{17q\ell}{12} \end{Bmatrix} \tag{3.13.13}$$

Step 6—Couple the equilibrium equations and compatibility conditions to obtain the IFM equations, and solve for forces:

$$\begin{bmatrix} -1 & -1 \\ \frac{13}{6} & \frac{1}{2} \end{bmatrix}\begin{Bmatrix} R_A \\ R_B \end{Bmatrix} = q\ell\begin{Bmatrix} -\frac{3}{2} \\ \frac{17}{12} \end{Bmatrix} \tag{3.13.14}$$

Solution of the IFM equation yields the reactions:

$$\begin{Bmatrix} R_A \\ R_B \end{Bmatrix} = q\ell\begin{Bmatrix} \frac{2}{5} \\ \frac{11}{10} \end{Bmatrix} \tag{3.13.15}$$

Other forces and moments can be back-calculated from the reactions as

$$R_C = R_B = \frac{11q\ell}{10}$$

$$R_D = R_A = \frac{2}{5}q\ell \tag{3.13.16}$$

The moment in the first span is given by

$$\mathcal{M}_f = \frac{2q\ell x_f}{5} - \frac{qx_f^2}{2} \tag{3.13.17}$$

The moment function $\mathcal{M}_f$ can be used for the third span; however, the coordinate (x_f) has to be measured with its origin at D and with its abscissa from D to C. The moment in the central span is

$$\mathcal{M}_c = -\frac{q\ell^2}{10} + \frac{q\ell x_c}{2} - \frac{1}{2}qx_c^2 \quad \left(\text{here } x_c \text{ is measured from } B \text{ to } C, \text{see fig. 3.13(e)}\right) \tag{3.13.18}$$

Step 7—Calculate the displacement, if required, by integrating the moment curvature relations:
For span AB,

$$\frac{d^2 w_f}{dx^2} = \frac{\mathcal{M}_f}{EI} = \frac{1}{EI}\left(\frac{2}{5}q\ell x_f - q\frac{x_f^2}{2}\right) \tag{3.13.19}$$

Upon integration,

$$w_f = \frac{1}{EI}\left(\frac{q\ell}{15}x_f^3 - q\frac{x_f^4}{24}\right) + c_1 x_f + c_2 \tag{3.13.20}$$

Displacement $w_f = 0$ at $x_f = 0$ and $x_f = \ell$,

or

$$c_2 = 0 \quad \text{and} \quad c_1 = -\frac{1}{EI}\frac{q\ell^3}{40} \tag{3.13.21a}$$

and

$$w_f = \frac{1}{EI}\left(\frac{q\ell x_f^3}{15} - \frac{qx_f^4}{24} - \frac{q\ell^3 x_f}{40}\right) \tag{3.13.21b}$$

The displacement function w_f for span AB can be used for the third span CD by measuring x_f from D as mentioned earlier.

For the span BC,

$$\frac{d^2 w_c}{dx^2} = \frac{\mathcal{M}_c}{EI} = \frac{1}{EI}\left(\frac{-q\ell^2}{10} + \frac{q\ell x_c}{2} - \frac{qx_c^2}{2}\right) \tag{3.13.22}$$

Upon integration,

$$w_c = \frac{1}{EI}\left(\frac{-q\ell^2 x_c^2}{20} + \frac{q\ell x_c^3}{12} - \frac{qx_c^4}{24}\right) + c_1 x_c + c_2 \tag{3.13.23}$$

The displacement $w = 0$ at $x_c = 0$ and $x_c = \ell$ yields the integration constants as

$$c_2 = 0 \qquad \text{and} \qquad c_1 = \frac{q\ell^3}{120EI} \tag{3.13.24}$$

The displacement function for the central span has the following form:

$$w_c = \frac{1}{EI}\left(\frac{-q\ell^2 x_c^2}{20} + \frac{q\ell x_c^3}{12} - \frac{q x_c^4}{24} + \frac{q\ell^3 x_c}{120}\right) \tag{3.13.25}$$

Illustrative Example 14: Portal Frame

A steel portal frame has the geometrical dimensions and load shown in figure 3.14(a). Analyze the problem for moments, displacements, and rotations under load at C. The Young's modulus of elasticity E is 30 000 ksi, and the moments of inertia I are given in figure 3.14(a).

Step 0—Solution strategy: The coordinate system (x, y) with its origin at A is shown in figure 3.14(a). For analysis, the portal frame is divided into four elements and five nodes (A, B, C, D, E). It has a total of eight moment unknowns $(M_1, M_2 \ldots, M_8)$, or $n = 8$. For simplicity, the five displacement unknowns $(m = 5)$ considered are

(1) Displacement X_s, representing the sway of the portal frame (see fig. 3.14(a))
(2) Three rotations $(\theta_B, \theta_C, \theta_D)$ at three locations (B, C, D), respectively
(3) Transverse displacement X_c at load application point C

The problem is three-degrees indeterminate $(r = n - m = 3)$. For this analysis, only bending deformations are considered; axial deformations are neglected.

Step 1—Formulate the equilibrium equations: The free-body diagram shown in figure 3.14(b) is sufficient to write the EE for the problem. The five EE along the five displacement degrees of freedom can be written as follows:

(1) Along the sway X_s direction—The displacement along the y-direction at the top of the frame or along the beam BCD is referred to as the sway displacement X_s. The force equilibrium along the sway direction for the beam BCD yields the following EE:

$$\frac{M_1 - M_2}{\ell_1} - \frac{M_8 - M_7}{\ell_4} = 0 \tag{3.14.1}$$

(2) Along the rotation θ_B direction at B: $\quad M_2 - M_3 = 0$ (3.14.2)

(3) Along the rotation θ_C direction at C: $\quad M_4 - M_5 = 0$ (3.14.3)

(4) Along the rotation θ_D direction at D: $\quad M_6 - M_7 = 0$ (3.14.4)

(5) Along the transverse displacement X_c direction at C:

$$-\left(\frac{M_3 - M_4}{\ell_2} + \frac{M_6 - M_5}{\ell_3} + P\right) = 0 \tag{3.14.5}$$

The EE are simplified by eliminating the length parameters ($\ell_1 = \ell_4$ and $\ell_2 = 2\ell_3$). The process makes the EE dimensionless, and the load term (P_5) becomes an equivalent moment of 2592.0 kip-in. The five EE can be written in matrix notation as

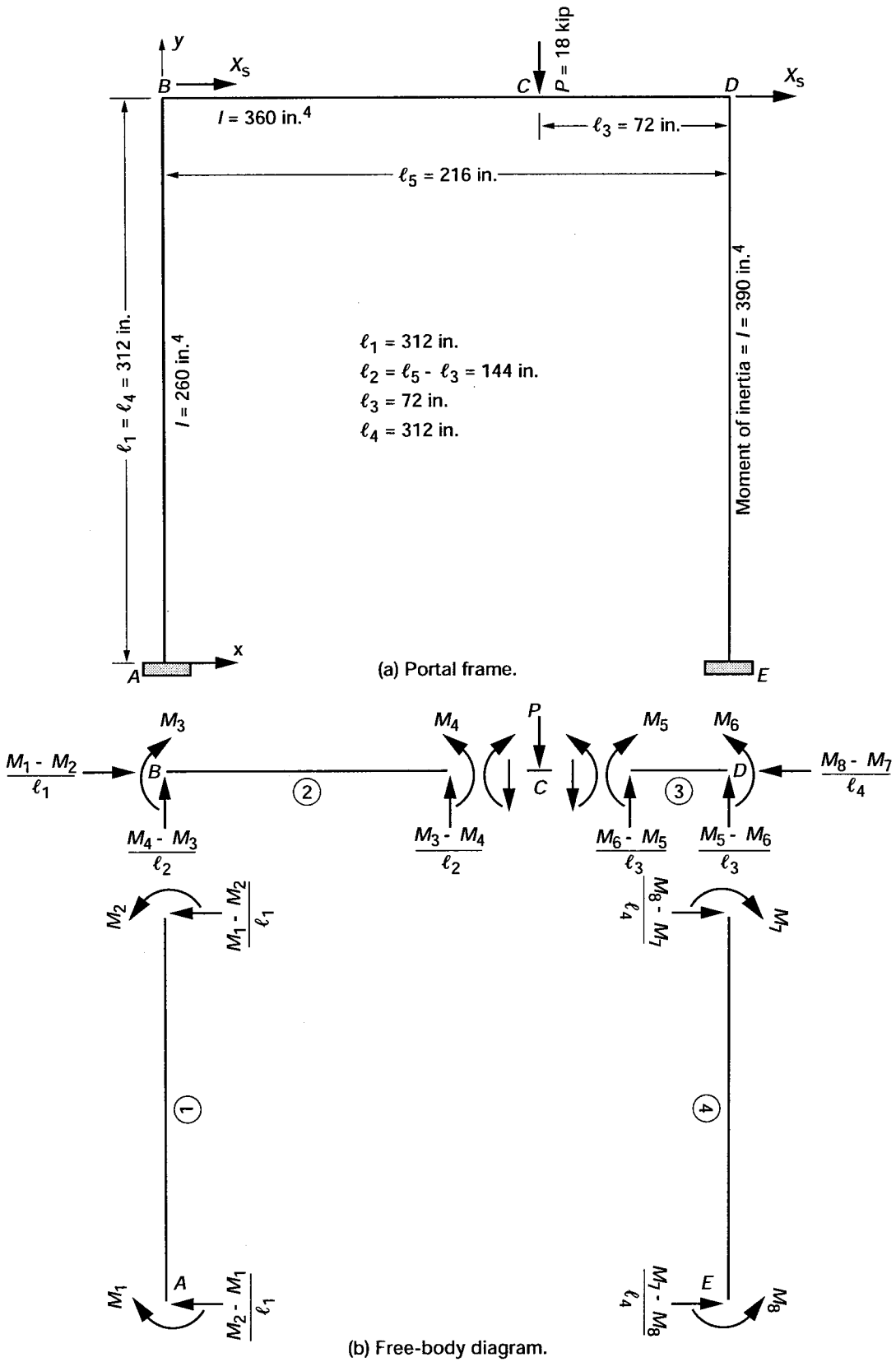

Figure 3.14.- Analysis of a portal frame.

$$\begin{bmatrix} \frac{1}{\ell_1} & -\frac{1}{\ell_1} & 0 & 0 & 0 & 0 & \frac{1}{\ell_1} & -\frac{1}{\ell_1} \\ 0 & 1 & -1 & 0 & 0 & 0 & 0 & 0 \\ 0 & 0 & 0 & 1 & -1 & 0 & 0 & 0 \\ 0 & 0 & 0 & 0 & 0 & 1 & -1 & 0 \\ 0 & 0 & \frac{1}{\ell_2} & -\frac{1}{\ell_2} & -\frac{2}{\ell_2} & \frac{2}{\ell_2} & 0 & 0 \end{bmatrix} \begin{Bmatrix} M_1 \\ M_2 \\ M_3 \\ M_4 \\ M_5 \\ M_6 \\ M_7 \\ M_8 \end{Bmatrix} = \begin{Bmatrix} 0 \\ 0 \\ 0 \\ 0 \\ -18 \end{Bmatrix} \tag{3.14.6}$$

Since five EE are expressed in terms of eight unknown forces, three CC are required for their determination.

Step 2—Derive the deformation displacement relations: The eight DDR for the problem are as follows:

$$\beta_1 = \frac{X_s}{\ell_1} \qquad \beta_5 = -\theta_C + \frac{2X_C}{\ell_2}$$

$$\beta_2 = -\frac{X_s}{\ell_1} + \theta_B \qquad \beta_6 = \theta_D - \frac{2X_C}{\ell_2}$$

$$\beta_3 = -\theta_B - \frac{X_C}{\ell_2} \qquad \beta_7 = \frac{X_s}{\ell_1} - \theta_D$$

$$\beta_4 = \theta_C + \frac{X_C}{\ell_2} \qquad \beta_8 = -\frac{X_s}{\ell_1} \tag{3.14.7}$$

In the DDR, the eight deformations ($\beta_1, \beta_2, \ldots, \beta_8$) correspond to the eight moments ($M_1, M_2, \ldots, M_8$), respectively. The dual displacement variables of the five EE are X_s, θ_B, θ_C, θ_D, and X_C.

Step 3—Generate the compatibility conditions: The five displacements are eliminated from the eight DDR to obtain three CC:

$$\begin{bmatrix} 1 & 1 & 1 & 1/3 & 1/3 & 0 & 0 & 0 \\ -1 & 0 & 0 & 2/3 & 2/3 & 1 & 1 & 0 \\ 1 & 0 & 0 & 0 & 0 & 0 & 0 & 1 \end{bmatrix} \begin{bmatrix} \beta_1 \\ \beta_2 \\ \beta_3 \\ \beta_4 \\ \beta_5 \\ \beta_6 \\ \beta_7 \\ \beta_8 \end{bmatrix} = \begin{Bmatrix} 0 \\ 0 \\ 0 \end{Bmatrix} \tag{3.14.8}$$

The null property ($[B][C]^T = 0$) of the compatibility and equilibrium matrices can be verified as

$$\begin{bmatrix} \frac{1}{\ell_1} & -\frac{1}{\ell_1} & 0 & 0 & 0 & 0 & \frac{1}{\ell_1} & -\frac{1}{\ell_1} \\ 0 & 1 & -1 & 0 & 0 & 0 & 0 & 0 \\ 0 & 0 & 0 & 1 & -1 & 0 & 0 & 0 \\ 0 & 0 & 0 & 0 & 0 & 1 & -1 & 0 \\ 0 & 0 & \frac{1}{\ell_2} & -\frac{1}{\ell_2} & -\frac{2}{\ell_2} & \frac{2}{\ell_2} & 0 & 0 \end{bmatrix} \begin{bmatrix} 1 & -1 & 1 \\ 1 & 0 & 0 \\ 1 & 0 & 0 \\ 1/3 & 2/3 & 0 \\ 1/3 & 2/3 & 0 \\ 0 & 1 & 0 \\ 0 & 1 & 0 \\ 0 & 0 & 1 \end{bmatrix} = \begin{bmatrix} 0 & 0 & 0 \\ 0 & 0 & 0 \\ 0 & 0 & 0 \\ 0 & 0 & 0 \\ 0 & 0 & 0 \end{bmatrix} \tag{3.14.9}$$

Step 4—Formulate the force deformation relation: The FDR for a uniform beam of span ℓ, subjected to end moments M_i and M_j, and the corresponding deformations β_i and β_j can be written (see eq. (2.48c)) as

$$\begin{Bmatrix} \beta_i \\ \beta_j \end{Bmatrix} = \left(\frac{\ell}{6EI}\right) \begin{bmatrix} 2 & 1 \\ 1 & 2 \end{bmatrix} \begin{Bmatrix} M_i \\ M_j \end{Bmatrix} \tag{3.14.10}$$

The FDR can be specialized for the four beam elements of the problem as

$$\beta_1 = \frac{1}{6E}(2.4\,M_1 + 1.2\,M_2) \qquad \beta_5 = \frac{1}{6E}(0.4\,M_5 + 0.2\,M_6)$$

$$\beta_2 = \frac{1}{6E}(1.2\,M_1 + 2.4\,M_2) \qquad \beta_6 = \frac{1}{6E}(0.2\,M_5 + 0.4\,M_6)$$

$$\beta_3 = \frac{1}{6E}(0.8\,M_3 + 0.4\,M_4) \qquad \beta_7 = \frac{1}{6E}(1.6\,M_7 + 0.8\,M_8)$$

$$\beta_4 = \frac{1}{6E}(0.4\,M_3 + 0.8\,M_4) \qquad \beta_8 = \frac{1}{6E}(0.8\,M_7 + 1.6\,M_8) \tag{3.14.11}$$

Step 5—Express the compatibility conditions in terms of forces: The CC can be expressed in moments by eliminating deformations between the CC and the FDR:

$$\left(\frac{1}{6E}\right) \begin{bmatrix} 3.600 & 3.600 & 0.933 & 0.667 & 0.133 & 0.067 & 0.000 & 0.000 \\ -2.400 & -1.200 & 0.267 & 0.533 & 0.467 & 0.533 & 1.600 & 0.800 \\ 2.400 & 1.200 & 0.000 & 0.000 & 0.000 & 0.000 & 0.800 & 1.600 \end{bmatrix} \begin{Bmatrix} M_1 \\ M_2 \\ M_3 \\ M_4 \\ M_5 \\ M_6 \\ M_7 \\ M_8 \end{Bmatrix} = \begin{Bmatrix} 0 \\ 0 \\ 0 \end{Bmatrix} \tag{3.14.12}$$

Step 6—Couple the equilibrium equations and compatibility conditions to obtain the IFM equations, and solve for forces:

$$
\begin{bmatrix}
\frac{1}{\ell_1} & -\frac{1}{\ell_1} & 0 & 0 & 0 & 0 & \frac{1}{\ell_1} & -\frac{1}{\ell_1} \\
0 & 1 & -1 & 0 & 0 & 0 & 0 & 0 \\
0 & 0 & 0 & 1 & -1 & 0 & 0 & 0 \\
0 & 0 & 0 & 0 & 0 & 1 & -1 & 0 \\
0 & 0 & \frac{1}{\ell_2} & -\frac{1}{\ell_2} & -\frac{2}{\ell_2} & \frac{2}{\ell_2} & 0 & 0 \\
3.600 & 3.600 & 0.933 & 0.667 & 0.133 & 0.067 & 0.000 & 0.000 \\
-2.400 & -1.200 & 0.267 & 0.533 & 0.467 & 0.533 & 1.600 & 0.800 \\
2.400 & 1.200 & 0.000 & 0.000 & 0.000 & 0.000 & 0.800 & 1.600
\end{bmatrix}
\begin{Bmatrix} M_1 \\ M_2 \\ M_3 \\ M_4 \\ M_5 \\ M_6 \\ M_7 \\ M_8 \end{Bmatrix}
=
\begin{Bmatrix} 0 \\ 0 \\ 0 \\ 0 \\ -18 \\ 0 \\ 0 \\ 0 \end{Bmatrix}
\tag{3.14.13}
$$

Solving the IFM equation yields the moments as

$$
\begin{Bmatrix} M_1 \\ M_2 \\ M_3 \\ M_4 \\ M_5 \\ M_6 \\ M_7 \\ M_8 \end{Bmatrix}
=
\begin{Bmatrix} 136.1 \\ -213.3 \\ -213.3 \\ 617.9 \\ 617.9 \\ -262.4 \\ -262.4 \\ 87.0 \end{Bmatrix}
\tag{3.14.14}
$$

Reactions can be back-calculated as follows.

Horizontal reactions (see fig. 3.14(b)):

At support A, the reaction H_A is along the positive x-direction:

$$
H_A = \frac{M_2 - M_1}{\ell_1} = -1.12 \text{ kip} \tag{3.14.15a}
$$

At support B, the reaction H_B is along the negative x-direction:

$$
H_B = \frac{M_7 - M_8}{\ell_4} = -1.12 \text{ kip} \tag{3.14.15b}
$$

Vertical reactions:

At support A, the vertical reaction V_A can be calculated as

$$V_A = \frac{M_4 - M_3}{\ell_2} = 5.77\,\text{kip} \tag{3.14.16a}$$

At support E, the vertical reaction V_E becomes

$$V_E = \frac{M_5 - M_6}{\ell_3} = 12.23\,\text{kip} \tag{3.14.16b}$$

Step 7—Back-calculate the displacement, if required, from the deformation displacement relations: The displacement under load P is

$$\frac{X_C}{\ell_2} = (\beta_1 + \beta_2 + \beta_3)$$

$$X_C = \frac{\ell_2}{6E}(3.6M_1 + 3.6M_2 + 0.8M_3 + 0.4M_4) = -161.1 \times 10^{-3} \text{ in.} \tag{3.14.17}$$

Displacement X_C is along the negative y-axis, which is the direction of the external load. The sway displacement is

$$X_S = \ell_1\beta_1 = \frac{\ell_1}{6E}(2.4M_1 + 1.2M_2) = 122.5 \times 10^{-3} \text{ in.} \tag{3.14.18}$$

The portal sways along the positive x-axis.

Illustrative Example 15: Navier's Table Problem

Structural indeterminacy was recognized by Navier (1785–1836) when he attempted to determine the four reactions (R_1, R_2, R_3, R_4) along the four legs of a table that was subjected to a concentrated load P with eccentricities e_x and e_y as shown in figure 3.15(a). He assumed that the symmetrical table was made of wood and that it was resting on a level floor made of a rigid material, such as stone. The distances between the legs along the x- and y-directions were $2a$ and $2b$, respectively. Solve the problem for the reactions and displacements.

Step 0—Solution strategy: For the table problem, the origin A of the coordinate system (x, y, z) is selected at the center of the table top. The reactions (R_1, R_2, R_3, R_4) are the four force unknowns, or $n = 4$. The problem has three equilibrium equations and three displacement variables (w, θ_x, θ_y)—shown in figures 3.15(b), (c), and (d)—which represent the dual variables of the three EE, or $m = 3$. The problem is one-degree indeterminate ($r = n - m = 1$). For the table problem, the reaction along the positive y-direction produces compression in the legs of the table as shown in figure 3.15(a).

Step 1—Formulate the equilibrium equations: The three EE (the sum of the reactions, or $\Sigma V = 0$, and the sum of the moments along the x- and y-directions, or $\Sigma_x M = 0$ and $\Sigma_y M = 0$) can be written for the table problem as follows:

$$\begin{matrix} \Sigma_z V = 0 \\ \Sigma_x M = 0 \\ \Sigma_y M = 0 \end{matrix} \begin{bmatrix} -1 & -1 & -1 & -1 \\ a & a & -a & -a \\ -b & b & b & -b \end{bmatrix} \begin{Bmatrix} R_1 \\ R_2 \\ R_3 \\ R_4 \end{Bmatrix} = \begin{Bmatrix} -P \\ -e_y P \\ e_x P \end{Bmatrix}$$

or

$$[B]\{R\} = \{P\} \tag{3.15.1}$$

where $[B]$ is the (3×4) equilibrium matrix, and $\{R\}$ and $\{P\}$ represent the four reactions and the three load components. The three EE are expressed in terms of four unknown reactions, so the table problem cannot be determined from the EE alone. Navier was the first to recognize the indeterminate nature of this problem, which is one-degree indeterminate. One CC is required for its solution.

Step 2—Derive the deformation displacement relations: The DDR ($\{\beta\} = [B]^T\{X\}$) for the table problem can be written as

$$\begin{Bmatrix} \beta_1 \\ \beta_2 \\ \beta_3 \\ \beta_4 \end{Bmatrix} = \begin{bmatrix} -1 & a & -b \\ -1 & a & b \\ -1 & -a & b \\ -1 & -a & -b \end{bmatrix} \begin{Bmatrix} w \\ \theta_x \\ \theta_y \end{Bmatrix} \tag{3.15.2}$$

where the four deformations (β_1, β_2, β_3, β_4) along the four legs of the table correspond to the four reactions (R_1, R_2, R_3, R_4), respectively. The three displacements $\{X\}$, which are the dual variables of the EE, represent one translation, w, along the z-direction and two rotations, θ_x and θ_y, about the x- and y-axes, respectively.

Step 3—Generate the compatibility condition: The DDR contains four equations in terms of three displacements. In other words, the four deformations are not independent. One relation between the four deformations can be obtained by eliminating the three displacements from the four DDR:

$$\beta_1 - \beta_2 + \beta_3 - \beta_4 = 0$$

or

$$\begin{bmatrix} 1 & -1 & 1 & -1 \end{bmatrix} \begin{Bmatrix} \beta_1 \\ \beta_2 \\ \beta_3 \\ \beta_4 \end{Bmatrix} = 0 \tag{3.15.3}$$

Equation (3.15.3) represents the deformation compatibility condition ($[C]\{\beta\} = \{0\}$) for the table problem. Like the EE, the CC is independent of the material of the structure.

The null property of the equilibrium and compatibility matrices ($[B][C]^T = [0]$) can be verified as

$$\begin{bmatrix} -1 & -1 & -1 & -1 \\ a & a & -a & -a \\ -b & b & b & -b \end{bmatrix} \begin{bmatrix} 1 \\ -1 \\ 1 \\ -1 \end{bmatrix} = \begin{bmatrix} 0 \\ 0 \\ 0 \end{bmatrix} \tag{3.15.4}$$

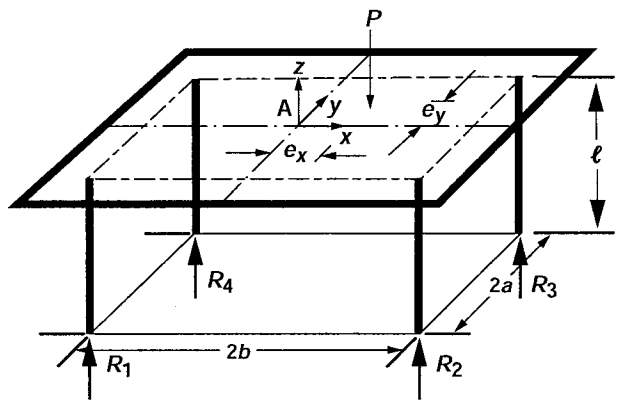

(a) Indeterminate table problem.

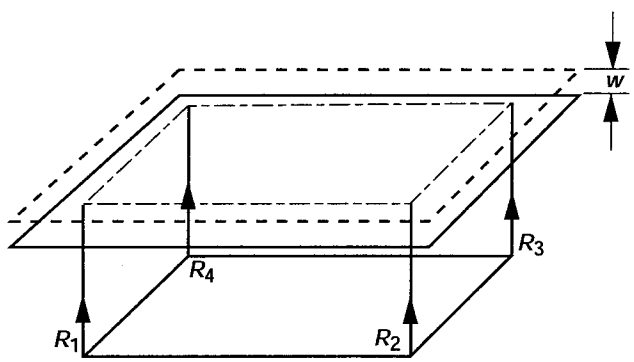

(b) Average displacement along *z*-axis.

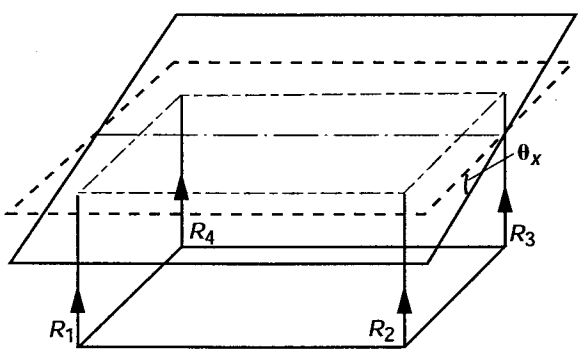

(c) Average tilt about *x*-axis.

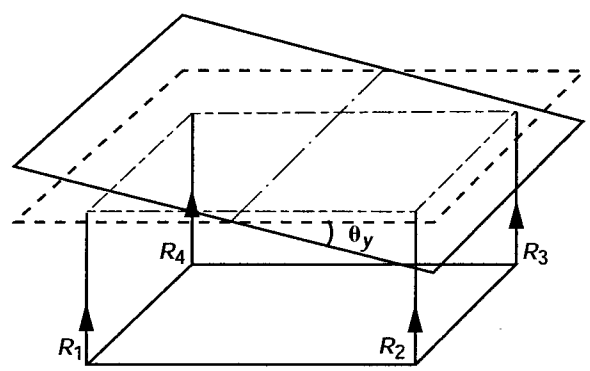

(d) Average tilt about *y*-axis.

Figure 3.15.- IFM introduced through Navier's table problem.

Step 4—Formulate the force deformation relations: The FDR for the problem can be written as

$$\beta_1 = \frac{\ell R_1}{AE}$$

$$\beta_2 = \frac{\ell R_2}{AE}$$

$$\beta_3 = \frac{\ell R_3}{AE}$$

$$\beta_4 = \frac{\ell R_4}{AE}$$

or

$$\frac{\ell}{AE} = \frac{\beta_1}{R_1} = \frac{\beta_2}{R_2} = \frac{\beta_3}{R_3} = \frac{\beta_4}{R_4} = \text{constant} \tag{3.15.5}$$

where ℓ is the table height, A is the cross-sectional area of the legs, and E is the modulus of elasticity of the material of the table legs.

Step 5—Express the compatibility conditions in terms of forces: The CC in forces is obtained by eliminating deformations β in favor of reactions R as

$$\frac{\ell}{AE}(R_1 - R_2 + R_3 - R_4) = 0$$

or

$$\frac{\ell}{AE}\begin{bmatrix}1 & -1 & 1 & -1\end{bmatrix}\begin{Bmatrix}R_1\\R_2\\R_3\\R_4\end{Bmatrix} = 0 \tag{3.15.6}$$

Step 6—Couple the equilibrium equations and compatibility conditions to obtain the IFM equations, and solve for forces:

$$\begin{bmatrix}-1 & -1 & -1 & -1\\ a & a & -a & -a\\ -b & b & b & -b\\ 1 & -1 & 1 & -1\end{bmatrix}\begin{Bmatrix}R_1\\R_2\\R_3\\R_4\end{Bmatrix} = \begin{Bmatrix}-P\\-e_y P\\e_x P\\0\end{Bmatrix} \tag{3.15.7}$$

In the homogeneous CC given by the fourth equation in (3.15.7), ($\ell/AE = 1$) is set to unity. Solution of equation (3.15.7) yields the forces:

$$\begin{Bmatrix}R_1\\R_2\\R_3\\R_4\end{Bmatrix} = \frac{P}{4}\begin{Bmatrix}1-r_x-r_y\\1+r_x-r_y\\1+r_x+r_y\\1-r_x+r_y\end{Bmatrix} = \frac{P}{4}\begin{Bmatrix}1\\1\\1\\1\end{Bmatrix}_{r_x=r_y=0} \tag{3.15.8}$$

where $r_x = e_x/b$ and $r_y = e_y/a$.

When the load is placed at the center of the table, $r_x = r_y = 0.0$ and each leg carries one-quarter of the load.

$$R_1 = R_2 = R_3 = R_4 = \frac{P}{4} \tag{3.15.9}$$

Step 7—Back-calculate the displacement, if required, from the deformation displacement relations: Once internal forces are known, displacements can be calculated by back-substitution in the DDR given by equation (3.15.2) and the FDR.

$$w = -\left(\frac{\beta_1 + \beta_2 + \beta_3 + \beta_4}{4}\right) = -\frac{\ell}{4AE}\left(R_1 + R_2 + R_3 + R_4\right) = -\frac{P\ell}{4AE}$$

$$\theta_x = \left(\frac{\beta_1 + \beta_2 - \beta_3 - \beta_4}{4a}\right) = \frac{\ell}{4AEa}\left(R_1 + R_2 - R_3 - R_4\right) = -\frac{P\ell e_y}{4AEa^2}$$

$$\theta_y = -\left(\frac{\beta_1 - \beta_2 - \beta_3 + \beta_4}{4b}\right) = -\frac{\ell}{4AEb}\left(R_1 - R_2 - R_3 + R_4\right) = \frac{P\ell e_x}{4AEb^2} \tag{3.15.10}$$

When the load is placed at the center of the table ($r_x = r_y = 0$), the average displacements become

$$\begin{Bmatrix} w \\ \theta_x \\ \theta_y \end{Bmatrix}_{r_x = r_y = 0} = \frac{P}{4}\begin{Bmatrix} -\dfrac{\ell}{AE} \\ 0 \\ 0 \end{Bmatrix} \tag{3.15.11}$$

The three displacements—uniform displacement (w) along the transverse direction and two rotations (θ_x, θ_y) are depicted in figures 3.15(b), (c), and (d).

The transverse displacement (w) is along the negative y-direction, which also represents the load direction. Likewise, the rotations (θ_x, θ_y) are along the negative (clockwise) and positive (counterclockwise) directions, respectively (see figs. 3.15(a), (b), and (c)).

In the solution of the table problem, the tabletop is assumed to be rigid, which can be readily visualized by an examination of the displacements given by equation (3.15.10) and figures 3.15(b), (c), and (d). The assumption limits the scope of the analysis to a certain extent.

Chapter 4
Integrated Force Method and Dual Integrated Force Method for Finite Element Analysis

Internal forces and displacements are the primary unknowns of discrete structures, including frameworks (that is, trusses and frames) and continuous structures (such as plates, shells, and solids) idealized by finite elements. For the purpose of analysis, such structural models can be designated by two attributes, n and m, such as "structure (n, m)." The number of force unknowns or force degrees of freedom ($^n fof$) is n. Likewise, the number of displacement degrees of freedom ($^m dof$) is m. Once the n forces $\{F\}$ are determined, then the m displacements $\{X\}$ can be back-calculated from known forces, and vice versa. The method that treats all $^n fof$ as the principal unknowns is known as the force method. Likewise, the method that treats all $^m dof$ as the principal unknowns is called the displacement method. The force method and displacement method are the two fundamental structural mechanics formulations.

The displacement method, also known as the stiffness method (refs. 33 to 35), has been well researched and developed during the past few decades. This method currently dominates the analysis scenario. Its governing equation is ($[K]\{X\} = \{P\}$), where $[K]$ is the stiffness matrix, $\{X\}$ is the displacement vector, and $\{P\}$ is the load vector. The method is indirect because forces and stresses are back-calculated from the displacements, and the derived quantities can be susceptible to inaccuracies. Yet, the method is popular because of its simplicity, versatility, and computer amenability. The stiffness method parallels the Navier's displacement formulation in elasticity (see table I in the Preface).

The force method is the direct force determination formulation for structures. One would have anticipated that all n internal forces $\{F\}$ would have been the primary unknowns of the force method with basic equations ($[S]\{F\} = \{P^*\}$), where $[S]$ is the governing matrix, and that the force method in structures would have paralleled the Beltrami-Michell Formulation in elasticity (see table I). However, the classical force method, with redundants as the unknowns, satisfies neither attribute. Although the redundant method is elegant for manual computation of small problems for static loads, the classical formulation is cumbersome for computer automation; and for all practical purposes, it has disappeared from current use. The redundant force method, which has considerable historical significance, is described in references 30, 36, and 37.

A force method that could be considered equivalent to the Beltrami-Michell stress formulation in elasticity was not available because the understanding and the development of the compatibility conditions (CC) were immature. We have researched and have come to understand the CC of structural mechanics. We express the CC for discrete analysis first in terms of deformations $\{\beta\}$ as $[C]\{\beta\} = 0$ (here $[C]$ is the compatibility matrix), then in terms of all ($^n fof$) force variables as $[C][G]\{F\} = \{\delta R\}$ (here $[G]$ is the flexibility matrix and $\{\delta R\}$ is the effective initial deformation vector). Thus, the classical, redundant-based, ad hoc compatibility has been replaced by the correct CC representing the deformation balance conditions. The CC are coupled next with the equilibrium equations $[B]\{F\} = \{P\}$ (here $[B]$ is the equilibrium matrix, $\{F\}$ is the force vector, and $\{P\}$ is the load vector), to obtain the direct force determination method, which in the literature is referred to as the Integrated Force Method (IFM). The IFM with forces $\{F\}$ as the unknowns parallels the Beltrami-Michell Formulation in elasticity, with the governing equation $[S]\{F\} = \{P\}^*$. The IFM is as versatile as the stiffness method, and it is amenable to computer automation. It produces accurate stress and displacement solutions, even for modest finite element models.

A dual formulation for the primal IFM, referred to as the Dual Integrated Force Method (IFMD), has been formulated. The dual method uses the elemental matrices of IFM, but displacements are its primal unknowns with the governing matrix ($[D]\{X\} = \{P\}$).

Forces $\{F\}$ in the dual method are backcalculated as $\{F\} = [G]^{-1}[B]^T\{X\}$. The primal IFM and dual IFMD are equivalent formulations and produce identical results for forces and displacements. In the earlier chapters, the IFM was developed for elementary, indeterminate structural mechanics problems. In this chapter, the primal and the dual methods are introduced for finite element analysis.

Equations of the Integrated Force Method

The IFM equations for a continuum discretized by finite elements with n and m force and displacement degrees of freedom, respectively, are obtained by coupling the m EE and the $(r = n - m)$ CC. The m equilibrium equations ($[B]\{F\} = \{P\}$) and the r compatibility conditions ($[C][G]\{F\} = \{\delta R\}$), when combined to obtain the IFM governing equations for static analysis, can be written as

$$\begin{bmatrix} [B] \\ \hline [C][G] \end{bmatrix} \{F\} = \begin{Bmatrix} \{P\} \\ \hline \{\delta R\} \end{Bmatrix} \qquad \text{or} \qquad [S]\{F\} = \{P^*\} \tag{4.1}$$

From forces $\{F\}$, displacements $\{X\}$ are back-calculated with the following formula:

$$\{X\} = [J]\left\{[G]\{F\} + \left\{\beta^0\right\}\right\} \tag{4.2}$$

where $[J] = m$ rows of $\left[[S]^{-1}\right]^T$.

The definitions of the matrices and vectors in equations (4.1) and (4.2) follow:

$[B]$ is the $(m \times n)$ rectangular equilibrium matrix with more columns than rows. It is a very sparse, unsymmetrical matrix with full row rank.

$[G]$ is the $(n \times n)$ symmetrical flexibility matrix. It is a block-diagonal matrix, where each block represents a flexibility matrix for an element.

$[C]$ is the $(r \times n)$ compatibility matrix. The generation and properties of the compatibility matrix are explained later in this chapter. $\{\delta R\} = -[C]\{\beta\}^0$ is the effective initial deformation vector. Here, $\{\beta\}^0$ is the initial deformation vector of dimension n.

$[S]$ is the $(n \times n)$ IFM governing unsymmetrical matrix defined in equation (4.1).

$[J]$ is the $(m \times n)$ deformation coefficient matrix back-calculated from the $[S]$ matrix.

The IFM has two key equations: equation (4.1) to calculate forces, and equation (4.2) to calculate displacements. The familiar process of differentiation used in the popular stiffness method to generate stresses from displacements is avoided in the IFM.

In terms of fundamental operators, an analogy can be made between the IFM and the theory of elasticity (ref. 38). The three fundamental operators of elasticity are (1) the equilibrium operator of Cauchy, which relates stresses to external loads; (2) the compatibility operator of St. Venant, which controls components of strain; and (3) the material constitutive matrix of Hooke, which relate strains to stresses. Likewise, the IFM has three matrices that are equivalent to the operators of elasticity theory. These operators, which become matrices in the context of finite element analysis, are (1) the equilibrium matrix $[B]$, which links internal forces to external loads; (2) the compatibility matrix $[C]$, which governs the deformations ($[C]\{\beta\} = \{0\}$); and (3) the flexibility matrix $[G]$, which relates deformations and forces. Both the equilibrium and the compatibility operators of elasticity and the corresponding matrices of the IFM are unsymmetrical, whereas the material constitutive matrix and the flexibility matrix are symmetrical.

Governing operators of other formations (e.g., Navier's displacement formulation, Airy's stress function formulation, Reissner's hybrid formulation, or the Hu-Washizu's mixed formulation) and the matrices of other discrete analysis methods (such as the stiffness, redundant force, mixed, and hybrid methods, see table I) are, in principle, derivable from the basic unsymmetrical operators of elasticity and the matrices of the IFM (see app. A). Mathematically speaking, the derived operators and matrices of other formulations can possess characteristics (i.e., the numerical norms, spectral radii, and stability of equation systems) no more superior than the basic unsymmetrical operators of elasticity theory or the matrices of the IFM, even when the derived operators and matrices become symmetrical (ref. 30).

The frequency analysis equation of the IFM without damping is as follows:

$$\left[[S]-\omega^2\left[\frac{[M][J][G]}{0}\right]\right]\{F\}=0 \tag{4.3}$$

where $[M]$ is the $(m \times m)$ mass matrix, ω is the circular frequency, and $\{F\}$ is the force mode shape of the eigenvalue problem.

Forces are the unknowns of the IFM vibration analysis. Displacement modes in IFM, if required, can be back-calculated from forces $\{F\}$ by using equation (4.2). In other words, the IFM provides one set of equations to determine forces (i.e., eq. (4.1) for static analysis or eq. (4.3) for vibration analysis) and provides another set for the calculation of displacements (eq. (4.2)).

Equations of the Dual Integrated Force Method

The Dual Integrated Force Method (IFMD) is obtained by mapping forces into displacements (ref. 5). The basic equations of the dual formulation, without initial deformations and damping, are summarized next.

Static analysis equations of the IFMD are as follows:

$$[D]\{X\}=\{P\} \tag{4.4}$$

Forces can be obtained from displacements by using the following formulas:

$$\{F\}=[G]^{-1}[B]^T\{X\} \tag{4.5}$$

The dynamic analysis equations of the IFMD follow:

$$\left[[D]-\omega^2[M]\right]\{X\}=0 \tag{4.6}$$

where the $(m \times m)$ symmetrical matrix ($[D]=[B][G]^{-1}[B]^T$) is assembled at the element level.

From the displacement modes, force mode shapes can be back-calculated by using equation (4.5). Like IFM, the dual IFMD, which treats displacements as the primary variables, has one equation to calculate displacements (eq. (4.4)) for static analysis or eq. (4.6) for dynamic analysis) and has one equation for the determination of forces from displacements (eq. (4.5)). IFM and IFMD provide identical solutions for stresses, displacements, and frequencies. For design and sensitivity analysis, the primal IFM, however, has some advantage over the dual IFMD (refs. 34 and 35).

Matrices of the Integrated Force Method

Three matrices are required for IFM finite element analysis—namely the equilibrium matrix $[B]$, the flexibility matrix $[G]$, and the compatibility matrix $[C]$. The generation of the matrices is illustrated by considering a simple rectangular plate-bending element as an example.

Generation of the equilibrium matrix [B].—The EE, written in terms of forces at the grid points of a finite element model, represent the vectorial summation of n internal forces $\{F\}$ and m external loads $\{P\}$. The nodal EE in matrix notation give rise to a $(m \times n)$-banded rectangular equilibrium matrix $[B]$, which is independent of the material properties and design parameters of the indeterminate structure (n, m). For finite element analysis, this matrix is assembled from elemental equilibrium matrices.

The elemental equilibrium matrices $[B^e]$ for bar and beam elements can be obtained from the direct force balance principle (ref. 37). For continuous structures, such as plates or shells, very few equilibrium matrices have been reported in the literature (refs. 36 and 39). Equilibrium matrices for the plate flexure problem are given by Przemieniecki (ref. 36) and Robinson (ref. 39). Przemieniecki generates the matrix for a rectangular plate in flexure from direct application of the force balance principle at the nodes. Robinson utilizes the concept of virtual work to derive the matrix for a rectangular-plate in flexure. The procedures of Przemieniecki and Robinson, which are documented in their books (refs. 36 and 39), are not repeated here.

Energy-equivalent equilibrium matrices for finite element analysis can be obtained from the IFM variational functional (ref. 8). The procedure for generating an elemental equilibrium matrix from the IFM variational functional is illustrated next for a rectangular-plate in flexure. The portion of the IFM functional (ref. 8) that yields the equilibrium matrix $[B]$ for a plate flexure has the following explicit form:

$$U_p = \int_D \left\{ M_x \frac{\partial^2 w}{\partial x^2} + M_y \frac{\partial^2 w}{\partial y^2} + M_{xy} \frac{\partial^2 w}{\partial x \partial y} \right\} dx\, dy = \int_D \{M\}^T \{\varepsilon\} ds \tag{4.7}$$

where $\{M\}^T = (M_x, M_y, M_{xy})$ are the plate-bending moments, and $\{\varepsilon\}^T = (\partial^2 w/\partial x^2, \partial^2 w/\partial y^2, \partial^2 w/\partial x \partial y)$ represent the curvatures. The plate domain is D, and the coordinates are x and y.

By appropriate choice of force and displacement functions, one can discretize the energy scalar U_p to obtain the elemental equilibrium matrix $[B^e]$:

$$U_p = \{X\}^T \left[B^e\right] \{F\} \tag{4.8}$$

where the elemental displacement degrees of freedom are symbolized by $\{X\}$ and the elemental force degrees of freedom by $\{F\}$.

The force fields have to satisfy two mandatory requirements:

(1) The force fields must satisfy the homogeneous EE (here, the plate-bending equations in the element domain).

(2) The force components F_k $(k = 1,2,...,m)$ must be independent of one another. This condition ensures the kinematic stability of the element, and the resulting $[B^e]$ matrix has a full column rank.

Consider a four-node, rectangular plate bending element of length (a, b) along the x- and y-axes, as shown in figures 4.1(a) and (b). For the plate element, 12 equilibrium equations along directions $S_1, S_2, \ldots, S_{12}$ (which correspond to ${}^m dof = 12$ for the element, as shown in fig. 4.1(b)) can be written. The internal element forces $\{F\}$ (which correspond to ${}^n fof = 9$ for the problem) are different from the 12 nodal directions $(S_1, S_2, \ldots, S_{12})$.

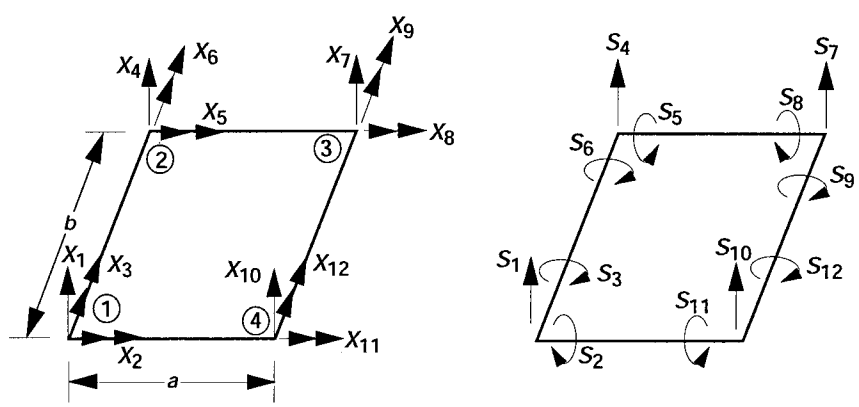

(a) Nodal displacements. (b) Nodal equilibrium.

Figure 4.1.- A rectangular element (PLB4SP) in flexure.

For the rectangular plate, the force field is chosen in terms of nine independent forces as

$$\{F\} = \langle F_1, F_2, \ldots, F_9 \rangle$$

as

$$\begin{aligned} M_x &= F_1 + F_2 x + F_3 y + F_4 xy \\ M_y &= F_5 + F_6 x + F_7 y + F_8 xy \\ M_{xy} &= F_9 \end{aligned} \tag{4.9}$$

Although the variation of the normal moments in the field is linear, the twisting moment is constant. The assumed moments satisfy the mandatory requirements. The selection of force fields for advanced finite elements is given in references 26 and 27.

The displacement field that should satisfy the continuity condition (ref. 34) is selected in terms of 12 variables to match the three nodal degrees of freedom (the transverse nodal displacement w_i and two rotations, θ_{xi} and θ_{yi}, per node i for the four nodes). It can be written in terms of Hermite polynomials as

$$\begin{aligned} w(x,y) = {} & H_{01}(x)H_{01}(y)X_1 + H_{01}(x)H_{11}(y)X_2 \\ & + H_{11}(x)H_{01}(y)X_3 + H_{01}(x)H_{02}(y)X_4 \\ & + H_{02}(x)H_{02}(y)X_7 + H_{02}(x)H_{12}(y)X_8 \\ & + H_{12}(x)H_{02}(y)X_9 + H_{02}(x)H_{01}(y)X_{10} \\ & + H_{02}(x)H_{11}(y)X_{11} + H_{12}(x)H_{01}(y)X_{12} \end{aligned} \tag{4.10a}$$

In equation (4.10a), the Hermite polynomials are defined as

$$\begin{aligned} H_{01}(x) &= \frac{x^3 - 3a^2 x + 2a^3}{4a^3} \\ H_{02}(x) &= \frac{x^3 - 3a^2 x - 2a^3}{4a^3} \\ H_{11}(x) &= \frac{x^3 - ax^2 - a^2 x + a^3}{4a^2} \\ H_{12}(x) &= \frac{x^3 - ax^2 - a^2 x - a^3}{4a^2} \end{aligned} \tag{4.10b}$$

where $X_1, X_2, \ldots, X_{12}$ are the 12 degrees of freedom and a and b are the dimensions of the plate element along the x and y-directions, respectively (fig. 4.1a). The Hermite polynomials for the y-direction can be obtained by changing (x and a) to (y and b), respectively, in equation (4.10b). The displacement field equation (eq. (4.10a)) gives rise to a linear force distribution for the plate-bending problem.

For finite element calculations, the force and displacement fields given by equations (4.9) and (4.10) can be written as follows:

$$\{M\} = [Y]\{F_e\} \tag{4.11}$$

$$\{w\} = [N]\{U_e\} \tag{4.12}$$

Here, $\{w\} = (w)$, and $\{M\}^T = (M_x, M_y, M_{xy})$ are the displacement and moments at a location within the plate domain; $\{U_e\}$ is the vector of element nodal displacements; $[N]$ is the matrix of displacement interpolation functions; $\{F\}^e$ is the unknown force vector; and $[Y]$ is the matrix of the moment interpolation functions. The curvature vector $\{\varepsilon\}$, which is obtained by differentiation of the displacement field, can be written as

$$\{\varepsilon\} = [Z]\{U_e\} \tag{4.13}$$

where $[Z] = [L][N]$, and $[L]$ is the matrix of differential operators.

The expression for the element equilibrium matrix $[B^e]$ is obtained from the strain energy given by equation (4.7) by substituting equations (4.11) and (4.13) into equation (4.7). The element equilibrium matrix $[B^e]$ can be symbolized as

$$\left[B^e\right] = \int_D [Z]^T [Y] ds \tag{4.14}$$

The equilibrium matrix is obtained by substituting interpolation functions for moments and displacement, then integrating. For the simple element, the integration can be completed in closed form. Equation (4.15) gives the equilibrium matrix $[B^e]$ thus obtained. The generation of the equilibrium matrix $[B^e]$ illustrated is a general procedure that can be applied to any other element type. Henceforth, the matrix obtained from the strain energy function is referred to as the consistent equilibrium matrix.

$$\left[B^e\right] = \begin{bmatrix}
0 & b & 0 & \frac{-2b^2}{5} & 0 & 0 & a & \frac{-2a^2}{5} & -2 \\
0 & \frac{b^2}{3} & 0 & \frac{-b^3}{15} & -a & \frac{2a^2}{5} & ab & \frac{-2a^2b}{5} & 0 \\
b & -ab & \frac{-2b^2}{5} & \frac{2ab^2}{5} & 0 & 0 & \frac{-a^2}{3} & \frac{a^3}{15} & 0 \\
0 & b & 0 & \frac{-2b^2}{5} & 0 & 0 & -a & \frac{-2a^2}{5} & 2 \\
0 & \frac{-b^2}{3} & 0 & \frac{-b^3}{15} & a & \frac{-2a^2}{5} & ab & \frac{-2a^2b}{5} & 0 \\
-b & -ab & \frac{-2b^2}{5} & \frac{-2ab^2}{5} & 0 & 0 & \frac{a^2}{3} & \frac{a^2}{15} & 0 \\
0 & -b & 0 & \frac{-2b^2}{5} & 0 & 0 & -a & \frac{-2a^2}{5} & -2 \\
0 & \frac{b^2}{3} & 0 & \frac{b^3}{5} & a & \frac{2a^2}{5} & ab & \frac{-2a^2b}{5} & 0 \\
-b & -ab & \frac{-2b^2}{5} & \frac{-2ab^2}{5} & 0 & 0 & \frac{-a^2}{3} & \frac{-a^3}{15} & 0 \\
0 & -b & 0 & \frac{2b^2}{5} & 0 & 0 & a & \frac{2a^2}{5} & 2 \\
0 & \frac{-b^2}{3} & 0 & \frac{b^3}{15} & -a & \frac{-2a^2}{5} & ab & \frac{2a^2b}{5} & 0 \\
b & -ab & \frac{-2b^2}{5} & \frac{-2ab^2}{5} & 0 & 0 & \frac{a^2}{3} & \frac{a^3}{15} & 0
\end{bmatrix} \tag{4.15}$$

The row and column dimensions of the equilibrium matrix $[B^e]$correspond to the elemental displacement and force degrees of freedom (here $m = 12$ and $n = 9$). The equilibrium matrix $[B^e]$ has a full column rank of $n = 9$.

Generation of the flexibility matrix [G].—Generation of the flexibility matrix for the finite element analysis is well established in the literature. It is obtained by discretization of the complementary strain energy expression U_c:

$$U_c = \frac{1}{2}\int_D \{M\}^T [D]\{M\}\, ds \tag{4.16}$$

where $[D]$ is the compliance matrix of the material. Substituting the moment interpolation function given by equation (4.11) into equation (4.16) yields U_c in terms of the flexibility matrix and force vector:

$$U_c = \frac{1}{2}\{F_e\}^T [G_e]\{F_e\} \tag{4.17}$$

where the element flexibility matrix $[G^e]$ is

$$\left[G^e\right] = \int_D [Y]^T [D][Y]\, ds \tag{4.18}$$

The complementary energy for this plate element in terms of moments takes the following form:

$$U_c = \left(\frac{D_1}{2}\right)\int \left\{M_x^2 + M_y^2 - 2\nu M_x M_y + (1+\nu)M_{xy}^2\right\} dx\, dy \tag{4.19}$$

where $D_1 = (Eh^3/12)$; E is the Young's modulus, ν is the Poisson's ratio, and h is the plate thickness. The (9×9) symmetrical flexibility matrix, which can be integrated in closed form, is obtained as

$$\left[G^e\right] = \frac{48ab}{Et^3}\begin{bmatrix} 1 & 0 & 0 & 0 & -\nu & 0 & 0 & 0 & 0 \\ 0 & \frac{a^2}{3} & 0 & 0 & 0 & -\frac{\nu a^2}{3} & 0 & 0 & 0 \\ 0 & 0 & \frac{b^2}{3} & 0 & 0 & 0 & -\frac{\nu b^2}{3} & 0 & 0 \\ 0 & 0 & 0 & \frac{a^2b^2}{9} & 0 & 0 & 0 & -\frac{\nu a^2 b^2}{9} & 0 \\ -\nu & 0 & 0 & 0 & 1 & 0 & 0 & 0 & 0 \\ 0 & -\frac{\nu a^2}{3} & 0 & 0 & 0 & \frac{a^2}{3} & 0 & 0 & 0 \\ 0 & 0 & -\frac{\nu b^2}{3} & 0 & 0 & 0 & \frac{b^2}{3} & 0 & 0 \\ 0 & 0 & 0 & -\frac{\nu a^2 b^2}{9} & 0 & 0 & 0 & \frac{a^2b^2}{9} & 0 \\ 0 & 0 & 0 & 0 & 0 & 0 & 0 & 0 & 2(1+\nu) \end{bmatrix} \tag{4.20}$$

The symmetrical $(n \times n)$ flexibility matrix $[G^e]$ has a full rank of $n = 9$.

Generation of the compatibility matrix [C].—The compatibility conditions are controller types of relations. For finite element discrete analysis, the balancing of deformations $(f(\beta_1, \beta_2, \ldots, \beta_n) = 0)$ is the central compatibility concept. The procedure given earlier to generate the equilibrium and flexibility matrices cannot be applied for the generation of the CC. Instead, the CC and the associated coefficient matrix $[C]$ are obtained as an extension of

St. Venant's strain formulation in elasticity. The strain formulation is reviewed first through the plane stress elasticity problem and then it is extended to finite element analysis. The strain displacement relations for the elasticity problem are

$$\varepsilon_x = \frac{\partial u}{\partial x} \qquad \varepsilon_y = \frac{\partial v}{\partial y} \qquad \gamma_{xy} = \frac{\partial u}{\partial y} + \frac{\partial v}{\partial x} \tag{4.21a}$$

where ε_x, ε_y, and γ_{xy} are the strain components, and u and v are the displacements. The CC in elasticity are obtained by eliminating the two displacements from the three strain displacement relations:

$$\frac{\partial^2 \varepsilon_x}{\partial y^2} + \frac{\partial^2 \varepsilon_y}{\partial x^2} - \frac{\partial^2 \gamma_{xy}}{\partial x \partial y} = 0 \tag{4.21b}$$

The two steps that generate the CC are

(1) Establish the strain displacement relations given by equation (4.21a).
(2) Eliminate displacements from the strain displacement relations to obtain the CC given by equation (4.21b).

In the mechanics of discrete structures, the deformation displacement relations (DDR) are equivalent to the strain displacement relations in elasticity, and the deformations $\{\beta\}$ of discrete analysis are analogous to the strains $\{\varepsilon\}$ in elasticity. We obtain the DDR by utilizing the equality relation between internal strain energy ($1/2\{F\}^T\{\beta\}$) and external work ($1/2\{X\}^T\{P\}$), which for a discrete structure (n, m) can be written as

$$\frac{1}{2}\{F\}^T\{\beta\} = \frac{1}{2}\{X\}^T\{P\} \tag{4.22a}$$

We can rewrite equation (4.22a) by eliminating the load vector $\{P\}$ in favor of internal forces $\{F\}$, by using the EE ($[B]\{F\} = \{P\}$) to obtain

$$\frac{1}{2}\{X\}^T[B]\{F\} = \frac{1}{2}\{F\}^T\{\beta\}$$

or

$$\frac{1}{2}\{F\}^T\left\{[B]^T\{X\} - \{\beta\}\right\} = 0 \tag{4.22b}$$

Since the force $\{F\}$ is arbitrary and it is not a null vector, we finally obtain the following relation between deformations and nodal displacements:

$$\{\beta\} = [B]^T\{X\} \tag{4.23}$$

Equation (4.23) represents the global DDR of a finite element model whose system EE are given as $[B]\{F\} = \{P\}$. In equation (4.23), n deformations $\{\beta\}$ are expressed in terms of m displacements $\{X\}$; thus, there are $r = n - m$ constraints on deformations, which represent the r CC of the structure (n, m). We can obtain the r CC by eliminating the m displacements from the n DDR. In matrix notation, the CC can be written as

$$[C]\{\beta\} = \{0\} \tag{4.24a}$$

The deformation $\{\beta\}$ in equation (4.24a) represents total deformation, consisting of initial deformations $\{\beta\}^0$ and elastic deformations $\{\beta\}^e$ as $\{\beta\} = \{\beta\}^e + \{\beta\}^0$. The CC, in terms of the elastic deformations $\{\beta\}^e$, are as follows:

$$[C]\{\beta\}^e = \{\delta R\} \qquad \text{and} \qquad \{\delta R\} = -[C]\{\beta\}^0 \tag{4.24b}$$

Since $\{\beta\}^e = [G]\{F\}$, the compatibility condition in forces can be written as $[C][G]\{F\} = \{\delta R\}$.

The matrix $[C]$ has the dimensions $(r \times n)$. It is rectangular and banded, with a full row rank of r. The CC are kinematic relationships, and these are independent of sizing design parameters (such as the area of the bars, the moments of inertia of the beams, and the thickness of the plates), material properties, and external loads. The CC depend on the initial deformation in the structure.

An important attribute of compatibility conditions.—Because the compatibility condition in total deformations is a homogeneous equation ($[C]\{\beta\} = \{0\}$), an alternate matrix $\left[\overline{C}\right]$ obtained by linear combination of the rows of the matrix $[C]$ still represents a compatibility matrix that can be used in IFM analysis. The concept is illustrated through the 11-bar indeterminate truss (11, 9) shown in figure 4.2 with ${}^{n}fof = 11$, ${}^{m}dof = 9$, and $r = 2$. Its 11 DDR ($\{\beta\} = [B]^T\{X\}$) have the following explicit form:

$$\begin{Bmatrix} \beta_1 \\ \beta_2 \\ \beta_3 \\ \beta_4 \\ \beta_5 \\ \beta_6 \\ \beta_7 \\ \beta_8 \\ \beta_9 \\ \beta_{10} \\ \beta_{11} \end{Bmatrix} = \begin{bmatrix} 0 & 0 & 1 & 0 & 0 & 0 & 0 & 0 & 0 \\ 0 & 0 & 0 & 0 & \sqrt{2}/2 & \sqrt{2}/2 & 0 & 0 & 0 \\ 0 & 1 & 0 & 0 & 0 & 0 & 0 & 0 & 0 \\ -\sqrt{2}/2 & \sqrt{2}/2 & \sqrt{2}/2 & -\sqrt{2}/2 & 0 & 0 & 0 & 0 & 0 \\ -1 & 0 & 0 & 0 & 1 & 0 & 0 & 0 & 0 \\ 0 & 0 & 0 & -1 & 0 & 1 & 0 & 0 & 0 \\ 0 & 0 & -\sqrt{2}/2 & -\sqrt{2}/2 & 0 & 0 & 0 & \sqrt{2}/2 & \sqrt{2}/2 \\ 0 & 0 & -1 & 0 & 0 & 0 & 1 & 0 & 0 \\ 0 & 0 & 0 & 0 & -\sqrt{2}/2 & \sqrt{2}/2 & \sqrt{2}/2 & 0 & 0 \\ 0 & 0 & 0 & 0 & -1 & 0 & 0 & 1 & 0 \\ 0 & 0 & 0 & 0 & 0 & 0 & 0 & 0 & 1 \end{bmatrix} \begin{Bmatrix} X_1 \\ X_2 \\ X_3 \\ X_4 \\ X_5 \\ X_6 \\ X_7 \\ X_8 \\ X_9 \end{Bmatrix} \tag{4.25}$$

The DDR for the truss are obtained first by writing the EE ($[B]\{F\} = \{P\}$) and then $\{\beta\} = [B]^T\{X\}$. The nine displacements are labeled in figure 4.2. The 11 deformations $\{\beta\}$ represent elongations due to force in the 11 bars of the truss. Two compatibility conditions are obtained by eliminating the nine displacements from the eleven deformation-displacement relations given by equation (4.25) as

$$\beta_1 - \sqrt{2}\beta_2 + \beta_3 - \sqrt{2}\beta_4 + \beta_5 + \beta_6 = 0 \tag{4.26a}$$

$$\beta_6 - \sqrt{2}\beta_7 + \beta_8 - \sqrt{2}\beta_9 + \beta_{10} + \beta_{11} = 0 \tag{4.26b}$$

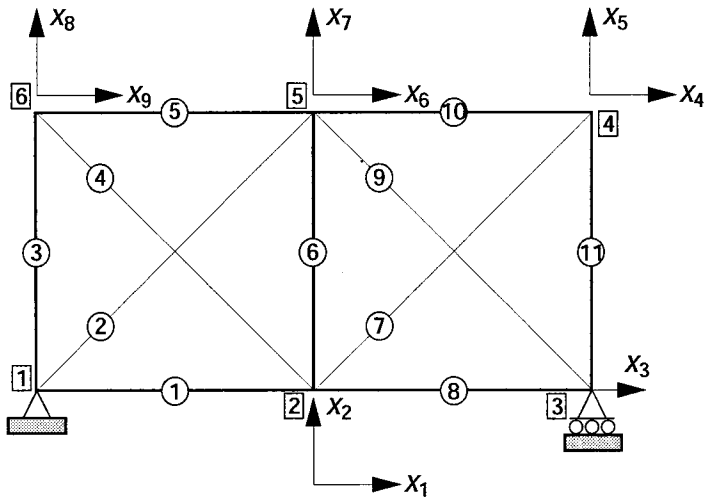

Figure 4.2.- Eleven-bar truss.

By combining equations (4.26a) and (4.26b), we can obtain the (2×11) compatibility matrix $[C]$ as

$$[C] = \begin{bmatrix} 1 & -\sqrt{2} & 1 & -\sqrt{2} & 1 & 1 & 0 & 0 & 0 & 0 & 0 \\ 0 & 0 & 0 & 0 & 0 & 1 & -\sqrt{2} & 1 & -\sqrt{2} & 1 & 1 \end{bmatrix} \tag{4.26c}$$

For the truss (9, 11), the CC is a (2×11) matrix. Because the CC are homogeneous equations ($[C]\{\beta\} = 0$), through linear combination of the rows of the $[C]$, the following full matrix can be obtained

$$[\overline{C}] = \begin{bmatrix} 1.000 & 1.000 & 1.000 & -1.417 & -1.417 & 0.874 & -0.012 & -0.012 & 0.018 & 0.018 & -0.012 \\ -0.012 & -0.012 & -0.012 & 0.018 & 0.018 & 0.874 & 1.000 & 1.000 & -1.417 & -1.417 & 1.000 \end{bmatrix} \tag{4.27}$$

The full matrix $[\overline{C}]$ can be used in IFM analysis. Theoretically speaking, there is the danger of generating a full compatibility matrix, destroying its banded nature. Several different procedures have been attempted to eliminate the deficiency associated with the generation of the homogeneous equations. The conclusion, however, is that a direct elimination of displacements from the DDR with row pivoting usually produces a well-banded matrix $[C]$. Elaborate schemes do not provide much superior results. The recommendation, therefore, is to follow direct elimination with adequate precision to reduce round-off errors, which can increase the bandwidth. With the fast, improved computation facility that is currently available, a few additional entries in the $[C]$ matrix do not pose a problem. It should be pointed out that a direct assembly of the CC for a general finite element application, even when possible, would not be likely to substantially improve the compatibility conditions.

Bandwidth of the Compatibility Conditions

The compatibility conditions of finite element models are banded. On the basis of bandwidth considerations, the CC can be divided into three distinct categories: interface, cluster or field, and external CC. For the finite element model shown in figure 4.3, the three types of CC are illustrated in figure 4.4.

Interface compatibility conditions.—Numerous interfaces internal to the structure are created in the finite element discretization process. The interface is the common boundary shared by two or more finite elements. In the figure 4.3 finite element model, the common boundary along nodes 1 and 7 is the interface between elements 1 and 2, the boundary connecting nodes 12 and 17 is the interface between elements 13 and 14, and so on. Consider the interface between elements 1 and 2 as shown in figure 4.4(a). The deformations of elements 1 and 2 must be compatible along the common boundary defined by nodes 1 and 7, which gives rise to the interface CC. The number

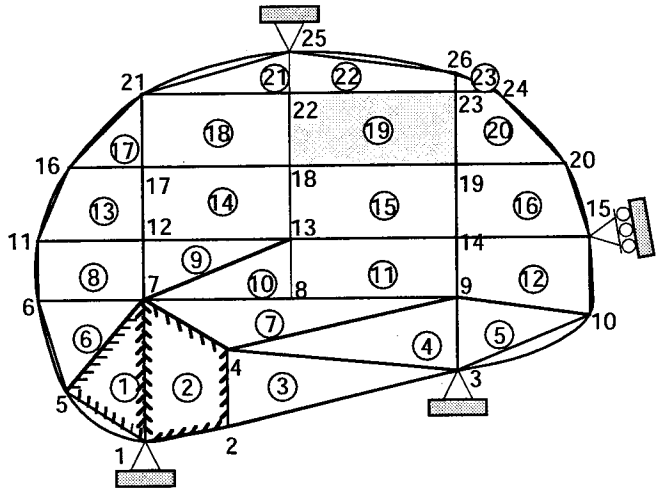

Figure 4.3.- Finite-element model. Elements are circled.

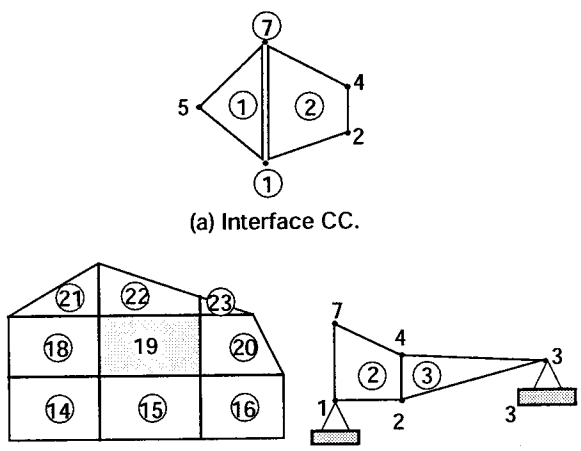

(a) Interface CC.

(b) Cluster or field CC.

(c) External CC.

Figure 4.4.- Bandwidth of compatibility conditions (CC).

of CC at the interface depends on the element types (membrane, flexure, solid tetrahedron, etc.) and their numbers. The maximum bandwidth of the interface compatibility conditions (MBW_{icc}) can be calculated as

$$MBW_{icc} = \sum_{j=1}^{JT} \left(fof_{ej} \right) \tag{4.28a}$$

where JT is the total number of elements present at the interface and fof_{ej} represents the force degrees of freedom of the element j present at the interface.

The bandwidth MBW_{icc} represents the maximum bandwidths of the interface compatibility conditions written either in terms of forces $\{F\}$, as in $[C][G]\{F\} = 0$ (where we are referring to the bandwidth of the product matrix $([C][G])$), or in terms of deformations $\{\beta\}$, as in $[C]\{\beta\} = \{0\}$ (where the bandwidth is that of the compatibility matrix $[C]$). The actual bandwidth of the compatibility matrix $[C]$ is smaller than its maximum bandwidth.

The interface CC of discrete analysis are analogous to the BCC in elasticity (ref. 21). The interface CC are the most numerous compatibility conditions in any finite element model. These can be generated by writing the deformation displacement relation of the local region (such as shown in fig. 4.4(a) for the interface defined by nodes 1 and 7)

and then eliminating the displacements from the local DDR. For the interface shown in figure 4.4(a), there are two elements (i.e., $JT = 2$). Let us assume that both are membrane elements; the *fof* of the triangular element fof_t is 3 and that of the quadrilateral element fof_q is 5. Then, the MBW_{icc} calculated from equation (4.28a) is 8.

Cluster, or field, compatibility conditions.—Consider any element in the model shown in figure 4.3, for example, element 19. This element, along with its eight neighboring elements, is also shown in figure 4.4(b). The deformations of element 19 must be compatible with those of its neighboring elements (14 to 16, 18, and 20 to 23). For such a cluster of elements, the CC are referred to as cluster or field CC, which essentially represent St. Venant's strain formulation in the field. The maximum bandwidth of the cluster CC can be calculated as

$$MBW_{ccc} = \sum_{j=1}^{JTC} \left(fof_{ej} \right) \tag{4.28b}$$

where *JTC* is equal to the total number of elements present in the cluster. If we assume that there are five force degrees of freedom for quadrilateral elements and three for triangular elements, the bandwidth calculated from equation (4.28b) is $MBW_{ccc} = 41$.

External compatibility conditions.—Reactions are induced at restrained nodes. If such restraints on the boundary exceed the number of rigid-body motions of the structure, then it is externally indeterminate. The degree of external indeterminacy R_{ext} can be calculated as

$$R_{ext} = N_x - N_f \tag{4.28c}$$

where N_x is the number of displacement components suppressed on the boundary and N_f is the number of boundary conditions required only for the kinematic stability of the structure.

Let us assume that the finite element model shown in figure 4.3 represents a membrane structure. Then, $R_{ext} = 7 - 3 = 4$, since the number of actual boundary restraints is $N_x = 7$ and the kinematic stability requirement is $N_f = 3$. To calculate the bandwidth of the external CC, separate the local region connecting any two restrained boundary nodes. Let the number of elements between the two nodes be represented by *JTE*, then the maximum bandwidth of the external CC (MBW_{ecc}) is given by

$$MBW_{ecc} = \sum_{j=1}^{JTE} \left(fof_{ej} \right) \tag{4.28d}$$

If we assume, as before, that there are five and three force degrees of freedom for the quadrilateral and triangular elements, respectively, then the maximum bandwidth of the external CC for the boundary segment shown in figure 4.4(c) is $MBW_{ecc} = 8$.

The interface, cluster, and external CC are the local constraints. All three categories of local conditions are concatenated together to form the system, or global CC, of the structure (n, m). The sum of the number of interface (r_{icc}), cluster (r_{ccc}), and external (r_{ecc}) CC is equal to the $r = n - m$ of the structure (n, m); that is, $r = r_{icc} + r_{ccc} + r_{ecc}$.

Our recommendation is to generate the CC by direct elimination of m displacements from the n DDR. Once the CC have been generated, their bandwidth can be checked against equations (4.28a), (4.28b), and (4.28d).

The equilibrium equations and the compatibility conditions are linked through the DDR. We can obtain the EE from the DDR through variational concepts of advanced calculus, and a direct elimination of displacements from the DDR yields the CC. The null product property (see eq. (2.17)) of the two fundamental matrices ($[B]$ and $[C]$) implies that error in the EE can propagate to the CC and vice versa.

Illustrative Example 16: Fixed Bar

Integrated Force Method.—The IFM analysis process can be illustrated through the fixed bar that was solved in chapter 3, Illustrative Example 1. This bar is subjected to thermomechanical loads. Such a bar, along with its end conditions and analysis parameters, is depicted in figure 4.5(a). The total length of the bar is $3L$. It is idealized by three finite elements consisting of a central element and two boundary elements of equal length L. The cross-

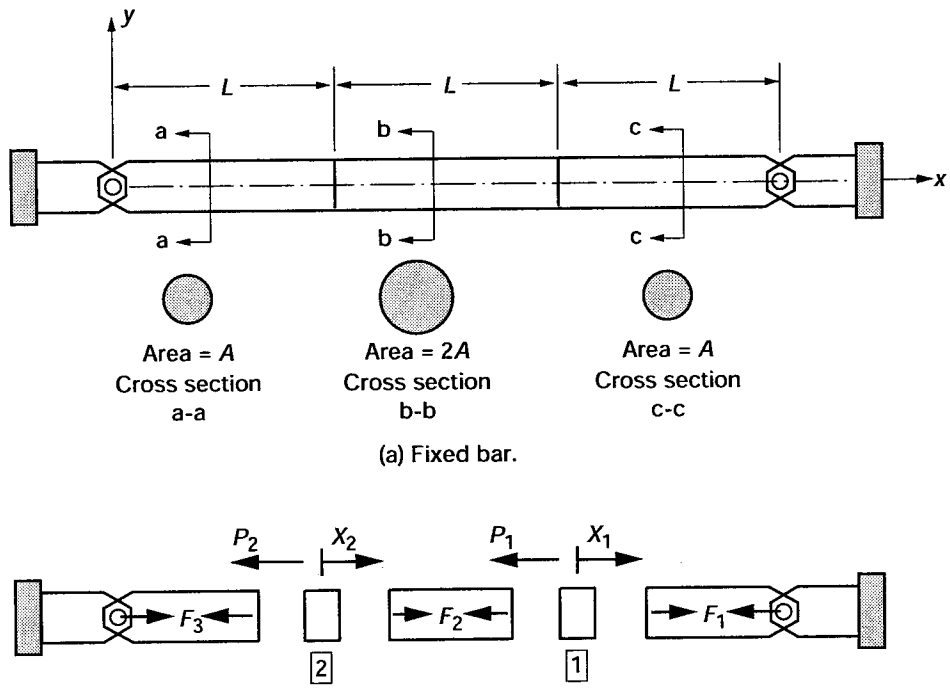

Figure 4.5.- Analysis of a bar by the Integrated Force Method, showing (P_1 and P_2), bar forces (F_1, F_2, and F_3), nodal displacements (X_1 and X_2), and lengths of elements (ℓ).

sectional areas of the boundary elements A are equal, and the area of the central element is $2A$. The bar is made of steel, its Young's modulus is E, and its coefficient of thermal expansion is α. It is subjected to mechanical loads P_1 and P_2 at one-third and two-thirds of its length. The temperature distribution of the central element is T_2, and the temperatures of the boundary elements are equal to T_1. The IFM and IFMD solutions are illustrated for this problem.

IFM solution for the fixed bar.—The IFM solution requires three matrices: $[B]$, $[G]$, and $[C]$ (see eq. (4.1)). The equilibrium matrix $[B]$ and the flexibility matrix $[G]$ are assembled from their elemental matrices. The compatibility matrix $[C]$ is obtained by eliminating displacements from the deformation displacement relations. The generation of the matrices for the problem, following the procedure given earlier in this chapter, is described next.

Elemental matrices for a bar element: By following the procedure that was illustrated for the plate element in equations (4.7) to (4.20), we can obtain the element matrices for the bar. The equilibrium matrix is generated for the following displacement and stress fields:

$$u = u_1 + \frac{u_2 - u_1}{L} x_\ell = \left(1 - \frac{x_\ell}{L}\right) u_1 + \left(\frac{x_\ell}{L}\right) u_2 \tag{4.29}$$

$$\sigma = \frac{F}{A} \tag{4.30}$$

where u_1 and u_2 are the axial nodal displacements for nodes 1 and 2, respectively, in the local system (x_ℓ, y_ℓ) as shown in figure 4.6. The uniform internal force in the bar is F, the associated stress is σ, and the area of the bar is A.

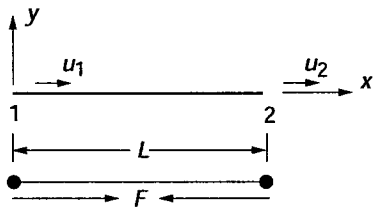

Figure 4.6.- Axial nodal displacements.

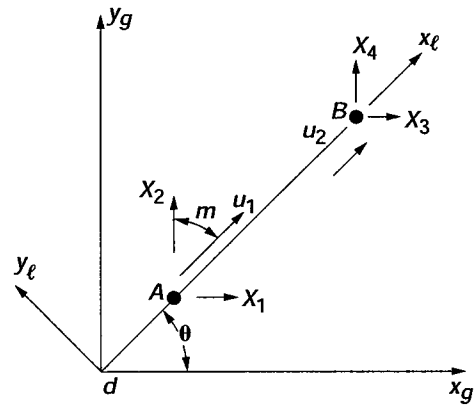

Figure 4.7.- Nodal displacements for a truss element in a global system.

The displacement in the field u varies linearly along the length of the bar. Equations (4.29) and (4.30) can be rewritten using the interpolation functions given by equations (4.11), (4.12), and (4.13), as follows:

$$\{\sigma\} = [Y]\{F\} = \left[\frac{1}{A}\right]\{F\}$$

$$\{u\} = [N]\begin{Bmatrix} u_1 \\ u_2 \end{Bmatrix} = \begin{bmatrix} 1-\frac{x_\ell}{L} & \frac{x_\ell}{L} \end{bmatrix}\begin{Bmatrix} u_1 \\ u_2 \end{Bmatrix}$$

$$\{\varepsilon\} = \left\{\frac{\partial u}{\partial x_\ell}\right\} = [L][N]\begin{Bmatrix} u_1 \\ u_2 \end{Bmatrix} = \begin{bmatrix} -\frac{1}{L} & \frac{1}{L} \end{bmatrix}\begin{Bmatrix} u_1 \\ u_2 \end{Bmatrix}$$

$$[Z] = [L][N] = \begin{bmatrix} -\frac{1}{L} & \frac{1}{L} \end{bmatrix} \tag{4.31}$$

The elemental equilibrium matrix becomes

$$\left[B^e\right] = \int_v [Z]^T [Y]\, dv$$

$$\int_0^\ell \begin{bmatrix} -1/L \\ 1/L \end{bmatrix}\left[\frac{1}{A}\right] A\, dx$$

or

$$\left[B^e\right] = \begin{bmatrix} -1 \\ 1 \end{bmatrix} \tag{4.32}$$

The equilibrium matrix for a truss element in local coordinates is a (2×1) matrix. Its rows correspond to the two displacements (u_1, u_2). Its single column corresponds to the internal force F.

The equilibrium matrix can be written in global coordinates (x_g, y_g) by expressing the displacement u in terms of the nodal displacement as shown in figure 4.7. In this figure, (X_1, X_2) and (X_3, X_4) represent the global nodal displacements at node 1 and 2, respectively. The bar orientation (local x_ℓ-axis) with respect to the global axes (x_g, y_g) is θ. Let us define ℓ and m as the direction cosines (for the bar AB) of the angles between line AB and the x_g- and y_g-axis, respectively. The nodal displacements (u_1, u_2) can be written as

$$\begin{Bmatrix} u_1 \\ u_2 \end{Bmatrix} = \begin{bmatrix} \ell & m & 0 & 0 \\ 0 & 0 & \ell & m \end{bmatrix} \begin{Bmatrix} X_1 \\ X_2 \\ X_3 \\ X_4 \end{Bmatrix} = [\lambda]\{X\} \tag{4.33}$$

The displacement in terms of nodal displacements (X_1, X_2, X_3, X_4) can be written as

$$\{u\} = [N]\begin{Bmatrix} u_1 \\ u_2 \end{Bmatrix} = [N][\lambda]\{X\}$$

or

$$[Z] = [L][N][\lambda] \tag{4.34}$$

The equilibrium matrix $\left[B_g^e\right]$ in the global nodal displacement $\{X\}$ can be written as

$$\left[B_g^e\right] = \int \left[\lambda^T\right]\left[N\ \right]\left[L\ \right]\left[Y\ \right] dv$$

or

$$\underset{(4\times1)}{\left[B_g^e\right]} = \underset{(4\times2)}{\left[\lambda^T\right]}\underset{(2\times1)}{\left[B^e\right]} \tag{4.35}$$

The equilibrium matrix for a bar element in global coordination is a (4×1) matrix that corresponds to the four global displacements (X_1, X_2, X_3, X_4), as follows:

$$\left[B_g^e\right] = \begin{bmatrix} -\ell \\ -m \\ \ell \\ m \end{bmatrix} \tag{4.36}$$

The equilibrium matrix $[B]$ in IFM equation (4.1) is written in global coordinates. Thus, the matrix $\left[B_g^e\right]$ given in equation (4.36) should be used to assemble the system equilibrium matrix $[B]$.

The flexibility matrix for the bar element is obtained by substitution in equation (4.18) as

$$\left[G^e\right] = \int_v [Y]^T [D][Y]\, dv \tag{4.37}$$

For the bar element,

$$\varepsilon = \frac{\sigma}{E} \qquad \text{or} \qquad D = \frac{1}{E}$$

$$\left[G^e\right] = \int_v \left[\frac{1}{A}\right]\left[\frac{1}{E}\right]\left[\frac{1}{A}\right] A\,dx$$

or

$$\left[G^e\right] = \left(\frac{\ell}{AE}\right) \tag{4.38}$$

The flexibility matrix is a (1×1) matrix because the bar has a single force unknown (F).

For illustrative example 16, three bar elements are used to discretize the structure, as shown in figure 4.5(b). The nodes and forces are labeled to match the quantities in figure 3.1. The force and displacement degrees of freedom of the structure shown in figure 4.5(b) are as follows:

(1) Force degrees of freedom: Each bar element is idealized by one internal force, or the structure has three force degrees of freedom (${}^{n}fof = 3$; F_1, F_2, F_3).

(2) Displacement degrees of freedom: The structure has two displacement degrees of freedom, one at each of its two free nodes, 2 and 3, (${}^{m}dof = 2$; X_1, X_2). For the IFM analysis, the structure is designated as bar (3, 2). It has $m = 2$ equilibrium equations and $r = n - m = 1$ compatibility condition. The local and global systems for the problem are identical, or direction cosines $\ell = 1$ and $m = 0$; thus, the local coordinates can be used to solve the problem.

Equilibrium equations.—The two-system EE of the bar are assembled from the three elemental EE (see eq. (4.32)):

Bar 1 (refer to fig. 4.5(b))

$$\left[B^{1e}\right] = \begin{array}{c} dof \\ \downarrow \\ 1 \\ 0 \end{array} \begin{array}{c} 1 \leftarrow fof \\ \begin{bmatrix} -1 \\ 1 \end{bmatrix} \end{array} \tag{4.39a}$$

Bar 2

$$\left[B^{2e}\right] = \begin{array}{c} \\ 2 \\ 1 \end{array} \begin{array}{c} 2 \\ \begin{bmatrix} -1 \\ 1 \end{bmatrix} \end{array} \tag{4.39b}$$

Bar 3

$$\left[B^{3e}\right] = \begin{array}{c} \\ 0 \\ 2 \end{array} \begin{array}{c} 3 \\ \begin{bmatrix} -1 \\ 1 \end{bmatrix} \end{array} \tag{4.39c}$$

The (2×3) system equilibrium matrix $[B]$ is obtained by following the standard finite element assembly technique:

$$[B] = \begin{array}{c} \\ 1 \\ 2 \\ \uparrow \\ dof \end{array} \begin{array}{c} \begin{array}{ccc} 1 & 2 & 3 \leftarrow fof \end{array} \\ \begin{bmatrix} -1 & 1 & 0 \\ 0 & -1 & 1 \end{bmatrix} \end{array} \tag{4.39d}$$

and the two EE can be written as

$$\begin{bmatrix} -1 & 1 & 0 \\ 0 & -1 & 1 \end{bmatrix} \begin{Bmatrix} F_1 \\ F_2 \\ F_3 \end{Bmatrix} = \begin{Bmatrix} -P_1 \\ -P_2 \end{Bmatrix} \tag{4.39e}$$

The EE given by equation (4.39e) is identical to equation (3.1.1c) from example 1 in chapter 2.

Flexibility matrix.—The elemental flexibility matrix for the bar is a (1×1) matrix $[G^e] = \ell/AE$. The flexibility matrix $[G]$ for the structure is obtained by concatenating the elemental matrices along the diagonal as follows:

$$[G] = \begin{bmatrix} \dfrac{L}{A_1 E} & & \\ & \dfrac{L}{A_2 E} & \\ & & \dfrac{L}{A_1 E} \end{bmatrix} \tag{4.40}$$

Compatibility conditions.—The first step in obtaining the CC is to establish the DDR ($\{\beta\} = [B]^T\{X\}$). The three-component deformation vector $\{\beta\}$ corresponds to the three elemental expansions due to forces F_1, F_2, and F_3, respectively. This deformation vector is related to the displacements (X_1, X_2) by the DDR ($\{\beta\} = [B]^T\{X\}$), which has the following form:

$$\begin{Bmatrix} \beta_1 \\ \beta_2 \\ \beta_3 \end{Bmatrix} = \begin{bmatrix} -1 & 0 \\ 1 & -1 \\ 0 & 1 \end{bmatrix} \begin{Bmatrix} X_1 \\ X_2 \end{Bmatrix} \tag{4.41a}$$

The two displacements are eliminated from the three DDR to obtain one CC ($r = n - m = 3 - 2 = 1$). In terms of deformations, the CC, $[C]\{\beta\} = \{0\}$, has the following explicit form:

$$\begin{bmatrix} 1 & 1 & 1 \end{bmatrix} \begin{Bmatrix} \beta_1 \\ \beta_2 \\ \beta_3 \end{Bmatrix} = \{0\} \tag{4.41b}$$

The CC constrains the total elongation of the bars to zero ($\beta_1 + \beta_2 + \beta_3 = 0$). For this simple case, this could have been asserted also by observation.

From equation (4.41b), the compatibility matrix $[C]$ is obtained as

$$[C] = \begin{bmatrix} 1 & 1 & 1 \end{bmatrix} \tag{4.41c}$$

The correctness of the matrix $[C]$ can be ascertained from its null property $[B][C]^T = 0$, here

$$\begin{bmatrix} -1 & 1 & 0 \\ 0 & -1 & 1 \end{bmatrix} \begin{bmatrix} 1 \\ 1 \\ 1 \end{bmatrix} = \begin{bmatrix} 0 \\ 0 \end{bmatrix} \tag{4.41d}$$

Effective initial deformations.—Prescribed deformations due to other effects (here, thermal expansion) are accommodated in the effective initial deformation vector $\{\delta R\}$. The effective initial deformation vector, which is obtained from initial deformations $\{\beta\}^0$ and the compatibility matrix $[C]$, has the following form:

$$\begin{Bmatrix} \beta_1^0 \\ \beta_2^0 \\ \beta_3^0 \end{Bmatrix} = \alpha\ell \begin{Bmatrix} T_1 \\ T_2 \\ T_1 \end{Bmatrix} \tag{4.42a}$$

The vector $\{\delta R\}$ is obtained from the formula $\{\delta R\} = -[C]\{\beta\}^0$ as

$$\{\delta R\} = -\alpha(2T_1 + T_2)L \tag{4.42b}$$

Consider the temperature distributions $T_1 = T_0/2$ and $T_2 = -T_0$. For this temperature distribution, the effective initial deformation vector $\{\delta R\} = 0$. Since $\{\delta R\}$ is zero, such compatible initial deformations do not induce forces in the structure.

From the definition of matrices $[B]$, $[C]$, $[G]$, and $\{\delta R\}$, the final governing IFM equation ($[S]\{F\} = \{P^*\}$) is assembled as

$$\begin{bmatrix} 1 & -1 & 0 \\ 0 & 1 & -1 \\ 1 & A_1/A_2 & 1 \end{bmatrix} \begin{Bmatrix} F_1 \\ F_2 \\ F_3 \end{Bmatrix} = \begin{Bmatrix} -P_1 \\ -P_2 \\ E\delta R/L \end{Bmatrix} \tag{4.43}$$

The CC or the third equation in equation (4.43) is scaled by multiplying it with the factor E/ℓ. The scaling process makes the governing IFM matrix $[S]$ dimensionless. Solution of equation (4.43) yields the forces from which displacements are calculated by back-substitution (from eq. (4.2)).

Numerical results.—The parameters of the example are as follows:

(1) Lengths of the bars: $L_1 = L_2 = L_3 = 10$ in.
(2) Cross-sectional areas: $A_1 = A_3 = 1$ in.^{2} and $A_2 = 2$ in.^{2}
(3) Modulus of elasticity: $E = 30\,000$ ksi
(4) Coefficient of thermal expansion: 6×10^{-6} per °F

Case 1—Mechanical loads only: The external loads are $P_1 = 10$ kips, $P_2 = 20$ kips, and $\delta R = 0$.

Internal forces are

$$\begin{Bmatrix} F_1 \\ F_2 \\ F_3 \end{Bmatrix} = \begin{Bmatrix} 14 \\ 4 \\ -16 \end{Bmatrix}_{\text{kips}}$$

Nodal displacements can be calculated from equation (4.2) as

$$\begin{Bmatrix} X_1 \\ X_2 \end{Bmatrix} = \begin{Bmatrix} 4.67 \\ 5.33 \end{Bmatrix}_{\text{in.}}^{\times10^{-3}}$$

Case 2—Nonuniform temperature: The thermal load corresponds to an increase of temperature distribution for the central span, or $T_1 = 0$ °F, $T_2 = 2000$ °F, and $T_3 = 0$ °F.

Internal forces: $$\begin{Bmatrix} F_1 \\ F_2 \\ F_3 \end{Bmatrix} = \begin{Bmatrix} -144 \\ -144 \\ -144 \end{Bmatrix}_{\text{kips}}$$

Nodal displacements: $$\begin{Bmatrix} X_1 \\ X_2 \end{Bmatrix} = \begin{Bmatrix} 0.048 \\ -0.048 \end{Bmatrix}_{\text{in.}}$$

Case 3—Uniform temperature: In this case, $T_1 = T_2 = T_3 = 2000$ °F.

Internal forces: $$\begin{Bmatrix} F_1 \\ F_2 \\ F_3 \end{Bmatrix} = -\begin{Bmatrix} 432 \\ 432 \\ 432 \end{Bmatrix}_{\text{kips}}$$

Nodal displacements: $$\begin{Bmatrix} X_1 \\ X_2 \end{Bmatrix} = \begin{Bmatrix} 0.024 \\ -0.024 \end{Bmatrix}_{\text{in.}}$$

Dual Integrated Force Method.—A dual formulation of the primal IFM has been developed. This formulation is termed the dual Integrated Force Method, or IFMD. The dual method is obtained from the IFM equations by mapping forces into displacements at the element level. Like the IFM, the dual method has two sets of equations. The first (or primary set), which represents a symmetrical set of equation (4.5), is used to calculate the displacements (see eq. (4.4)). Forces (or stresses) are back-calculated from the secondary set of equations. IFM and IFMD are analytically equivalent—producing identical analysis results for stresses, displacements, frequencies, and buckling loads. The dual method does not utilize differentiation to calculate stresses. The primary equations of the dual method closely resemble the equations of the popular stiffness method. Significant differences and similarities between the dual and the stiffness methods are

(1) The IFMD has two sets of formulas: one for the determination of displacements and another for the calculation of forces or stresses. The stiffness method has one set of equations to calculate displacements. Stresses in the stiffness method are calculated by differentiating the approximate displacements to calculate strains, which can be a source of error, and then transforming strains to stresses.

(2) The stiffness method utilizes the differentiation of approximate displacements to calculate stresses, which is avoided in the IFMD.

(3) The symmetrical equations of the IFMD can use the solvers that have been developed for the stiffness method. In fact, a stiffness code can be changed into an IFMD code without substantial modification.

The dual method developed and illustrated in this chapter is obtained from the four basic IFM equations:

Equilibrium equations: $$[B]\{F\} = \{P\} \tag{4.44a}$$

Compatibility conditions: $$[C]\{\beta\} = \{0\} \tag{4.44b}$$

Flexibility relations: $$\{\beta\}^e = \{\beta\} - \{\beta\}^0 = [G]\{F\} \tag{4.44c}$$

Deformation displacement relations: $$\{\beta\} = [B]^T\{X\} \tag{4.44d}$$

The IFM is obtained from these equations with forces as the primary unknowns: $[S]\{F\} = \{P\}^*$. We can obtain the IFMD from these equations by considering the displacement $\{X\}$ as the primary unknown in the following two steps.

Step 1—Eliminate deformations $\{\beta\}$ between the flexibility relations and the DDR to obtain the following force displacement relations:

$$\{F\} = [G]^{-1}[B]^T\{X\} - [G]^{-1}\{\beta\}^0 \tag{4.45}$$

Step 2—Eliminate forces between the EE and the FDR to obtain the primary equation of the IFMD:

$$\left[\underset{m\times n}{[B]}\,\underset{n\times n}{[G]^{-1}}\,\underset{n\times m}{[B]^T}\right]\underset{m\times 1}{\{X\}} = \underset{m\times 1}{\{P\}} + \left\{\underset{m\times n}{[B]}\,\underset{n\times n}{[G]^{-1}}\,\underset{n\times 1}{[\beta]^0}\right\} \tag{4.46a}$$

or

$$\underset{m\times m}{[D]_{ifmd}}\,\underset{m\times 1}{\{X\}} = \underset{m\times 1}{\{P\}_{ifmd}} \tag{4.46b}$$

where

$$[D]_{ifmd} = [B][G]^{-1}[B]^T$$

$$\{P\}_{ifmd} = \left\{\{P\} + \left([B][G]^{-1}\{\beta\}^0\right)\right\}$$

The governing equation appears to be similar to the stiffness equation, with some variation in the load term. Once displacements are known from the solution to equation (4.46), the force displacement relation given by equation (4.45) is used to back-calculate forces. Equation (4.46) is the primary equation, and equation (4.45) is the secondary equation of the IFMD.

Assembly of matrix $[D]_{ifmd}$.—The dual matrix $[D]_{ifmd}$ is assembled from elemental matrices in a process quite similar to the regular stiffness method. The assembly of the dual matrix $[D]_{ifmd}$ is illustrated here by considering the structure with three bars as an example (see fig. 4.5). Let the elemental equilibrium and flexibility matrices of the structure be represented by $[B^{1e}]$, $[B^{2e}]$, $[B^{3e}]$, and $[G^{1e}]$, $[G^{2e}]$, $[G^{3e}]$, respectively. The assembled equilibrium matrix $[B]$ of the structure can be written as

$$[B] = \left[B^{1e} \;\vdots\; B^{2e} \;\vdots\; B^{3e}\right] \tag{4.47}$$

The flexibility matrix $[G]$ is a concatenation of elemental matrices along the diagonal:

$$[G] = \begin{bmatrix} \left[G^{1e}\right] & & \\ & \left[G^{2e}\right] & \\ & & \left[G^{3e}\right] \end{bmatrix} \tag{4.48}$$

By using elemental equilibrium and flexibility matrices, we can define the following elemental pseudostiffness matrix:

$$[D]_{ifmd-e} = \left[B^e\right]\left[G^e\right]^{-1}\left[B^e\right]^T \tag{4.49a}$$

Equivalent elemental loads are defined as

$$\{P\}_{\text{thermal}-e} = [B]_e [G]_e^{-1} \{\beta_e\}^0 \tag{4.49b}$$

By substituting equations (4.47) and (4.48) into equation (4.46a) and expanding in terms of elemental matrices, we obtain

$$\left[\left[B^{1e}\right]\left[G^{1e}\right]^{-1}\left[\beta^{1e}\right]^T \vdots \left[B^{2e}\right]\left[G^{2e}\right]^{-1}\left[\beta^{2e}\right]^T \vdots \left[B^{3e}\right]\left[G^{3e}\right]^{-1}\left[\beta^{3e}\right]^T\right] = \{P\} + \begin{Bmatrix} \left[B^{1e}\right] & \left[G^{1e}\right]^{-1} & \left\{\beta^{1e}\right\}^T \\ \left[B^{2e}\right] & \left[G^{2e}\right]^{-1} & \left\{\beta^{2e}\right\}^T \\ \left[B^{3e}\right] & \left[G^{3e}\right]^{-1} & \left\{\beta^{3e}\right\}^T \end{Bmatrix} \tag{4.50}$$

We can write the system matrix of the IFMD as

$$[D]_{ifmd} = \left[D_{ifmd-e1} \mid D_{ifmd-e2} \mid D_{ifmd-e3}\right] \tag{4.51}$$

$$\{P\}_{ifmd} = \{P\} + \begin{Bmatrix} \{P\}_{\text{thermal\_1}} \\ \{P\}_{\text{thermal\_2}} \\ \{P\}_{\text{thermal\_3}} \end{Bmatrix}$$

The pseudostiffness matrix $[D]_{ifmd}$ for the finite element model can be assembled from the equivalent elemental matrices by following the standard stiffness assembly technique. The formulation of the mechanical nodal load vector $\{P\}$ also follows the regular stiffness assembly procedure.

The three-bar example used earlier to illustrate the IFM is used again to illustrate the IFMD solution process.

Step 1—Generate the elemental pseudostiffness matrices and load vectors:

Equilibrium matrix: $$\left[B^e\right] = \begin{bmatrix} -1 \\ 1 \end{bmatrix}$$

Inverse of flexibility matrix: $$\left[G^e\right]^{-1} = \left[\frac{AE}{\ell}\right]$$

Pseudostiffness matrix: $$[D]_{ifmd-e} = \left[B^e\right]\left[G^e\right]^{-1}\left[B^e\right]^T = \left(\frac{AE}{\ell}\right)\begin{bmatrix} 1 & -1 \\ -1 & 1 \end{bmatrix}$$

Equivalent thermal load: $$\{P\}_{\text{thermal}-e} = \begin{bmatrix} -1 \\ 1 \end{bmatrix}\left[\frac{AE}{\ell}\right]\left\{\beta^0\right\} = \left(\frac{AE}{\ell}\beta^0\right)\begin{Bmatrix} -1 \\ 1 \end{Bmatrix}$$

Step 2—Formulate the governing equation for the problem by using elemental matrices and vectors:

Degrees of freedom (fig. 4.5(e)) →

$$\begin{array}{c|c|c}
\downarrow \quad \begin{array}{cc} 0 & 1 \end{array} & \begin{array}{cc} 1 & 2 \end{array} & \begin{array}{cc} 2 & 0 \end{array} \\
\left[\begin{array}{c} 1 \\ 0 \end{array}\left[\left(\frac{AE}{\ell}\right)\begin{bmatrix} 1 & -1 \\ -1 & 1 \end{bmatrix}\right]\right. & \begin{array}{c} 1 \\ 2 \end{array}\left\{\left(\frac{AE}{\ell}\right)\begin{bmatrix} 1 & -1 \\ -1 & 1 \end{bmatrix}\right\} & \left.\left\{\left(\frac{AE}{\ell}\right)\begin{bmatrix} 1 & -1 \\ -1 & 1 \end{bmatrix}\right\}\begin{Bmatrix} X_1 \\ X_2 \end{Bmatrix}\right] \\
\longleftrightarrow \text{Element 1} & \longleftrightarrow \text{Element 2} & \longleftrightarrow \text{Element 3}
\end{array}$$

$$= \begin{array}{c} 1 \\ 2 \end{array}\begin{Bmatrix} F_1 \\ F_2 \end{Bmatrix}, \quad \begin{array}{c} 0 \\ 1 \end{array}\left\{\left(\frac{\beta^0 AE}{\ell}\right)\begin{Bmatrix} -1 \\ 1 \end{Bmatrix}\right\} + \begin{array}{c} 1 \\ 2 \end{array}\left\{\left(\frac{\beta^0 AE}{\ell}\right)\begin{Bmatrix} -1 \\ 1 \end{Bmatrix}\right\} + \begin{array}{c} 2 \\ 0 \end{array}\left\{\left(\frac{\beta^0 AE}{\ell}\right)\begin{Bmatrix} -1 \\ 1 \end{Bmatrix}\right\} \tag{4.52a}$$

Element 1 Element 2 Element 3

Equation (4.52a) can be simplified for the parameters of the problem ($A_1 = A_2 = 1.0$ in.^{2} and $A_3 = 2.0$ in.^{2}) to obtain the following equations of the dual method:

$$\left(\frac{E}{\ell}\right)\begin{bmatrix} 3 & -2 \\ -2 & 3 \end{bmatrix}\begin{Bmatrix} X_1 \\ X_2 \end{Bmatrix} = \overset{\text{Case 1}}{\begin{Bmatrix} 10 \\ 20 \end{Bmatrix}}, \quad \frac{\alpha E}{\ell}\overset{\text{Case 2}}{\begin{Bmatrix} -2\ell\,\Delta T_2 \\ 2\ell\,\Delta T_2 \end{Bmatrix}}, \quad \frac{\alpha E}{\ell}\overset{\text{Case 3}}{\begin{Bmatrix} \ell\,\Delta T_1 - 2\ell\,\Delta T_2 \\ -\ell\,\Delta T_3 + 2\ell\,\Delta T_2 \end{Bmatrix}} \tag{4.52b}$$

Solution of equation (4.52b) yields the following values for the displacements for the three load cases:

$$\begin{Bmatrix} X_1 \\ X_2 \end{Bmatrix}_{\text{inch}} = \begin{Bmatrix} 0.4667 \\ 0.5333 \end{Bmatrix}, \quad \begin{Bmatrix} -0.048 \\ 0.048 \end{Bmatrix}, \quad \begin{Bmatrix} -0.024 \\ 0.024 \end{Bmatrix} \tag{4.53}$$

We can calculate the forces from equation (4.45) as

$$\begin{Bmatrix} F_1 \\ F_2 \\ F_3 \end{Bmatrix}_{\text{kip}} = \underset{\text{Case 1}}{\begin{Bmatrix} 14 \\ 4 \\ -16 \end{Bmatrix}}, \quad \underset{\text{Case 2}}{\begin{Bmatrix} 144 \\ 144 \\ 144 \end{Bmatrix}}, \quad -\underset{\text{Case 3}}{\begin{Bmatrix} 432 \\ 432 \\ 432 \end{Bmatrix}} \tag{4.54}$$

The solution generated by the dual IFMD agrees with that of the primal IFM. Both the primal IFM and IFMD are based on identical sets of equations. These are the equilibrium equations, the compatibility conditions, the deformation force relations, and the deformation displacement relations. Only the solution order is changed. That is, in the primal IFM, forces are determined first and then displacements are back-calculated. In the IFMD, the reverse order is followed; that is, displacements are determined first and then forces are back-calculated. Therefore, the primal IFM and its dual IFMD yield identical solutions. The IFMD can be considered to be the true displacement method. The governing equations of the IFMD and the popular stiffness method are symmetrical, but the coefficients of the stiffness matrix and that of dual method pseudostiffness matrix can differ in magnitude. This aspect will be explained further in the next section.

Illustrative Example 17: Cantilevered Beam

Integrated force Method.—The IFM solution procedure is further illustrated by considering two simple examples. The first is a cantilevered beam idealized by two membrane elements. For the example, all matrices and equations required for IFM and IFMD analysis are generated in closed form. Also, results from the stiffness method and MSC/NASTRAN codes are obtained and compared. The second cantilevered truss example also is solved in closed form.

The cantilevered beam shown in figure 4.8 is 12-in. long, 2-in. deep, and 0.25-in. thick. It is made of steel with a Young's modulus E of 30 000 ksi and a Poisson's ratio ν of 0.3. For static analysis, it is subjected to a tip load of 10 lb at the free end. For dynamic analysis, the beam is considered massless with two lumped masses at its free end as shown in figure 4.8. Because closed-form analysis is used, a very simple four-node rectangular membrane element with five internal force unknowns, designated element IFMRC0405 (IFM rectangular four-node element with $dof = 8$ and $fof = 5$), is used. The problem is solved via the following methods:

(1) Integrated Force Method
(2) Dual Integrated Force Method
(3) Regular stiffness method
(4) MSC/NASTRAN stiffness method

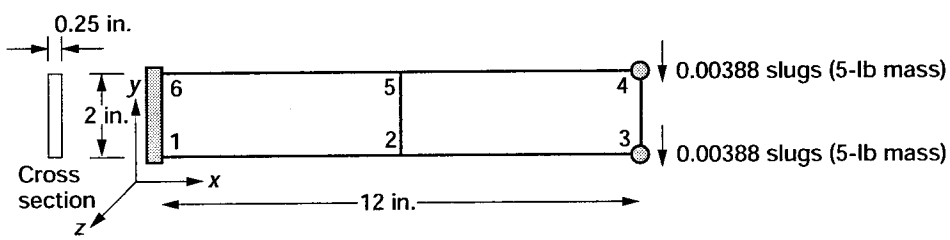

Figure 4.8.- Cantilevered beam idealized by two membrane elements (IFMRC0405).

Generation of the element equilibrium and the flexibility matrices required by IFM/IFMD analysis are as follows.

Elemental equilibrium matrix $[B^e]$: The elemental equilibrium matrix is obtained by discretizing the strain energy for the membrane, which can be written as

$$U^e = \int_S \left\{ N_x \frac{\partial u}{\partial x} + N_y \frac{\partial v}{\partial y} + N_{xy} \left(\frac{\partial u}{\partial y} + \frac{\partial v}{\partial x} \right) \right\} dx\, dy \tag{4.55}$$

where

u, v	membrane displacements
N_x, N_y, N_{xy}	membrane forces
x, y	Cartesian coordinates in domain S

The rectangular element with spans $2a$ and $2b$ and thickness t is shown in figure 4.9.

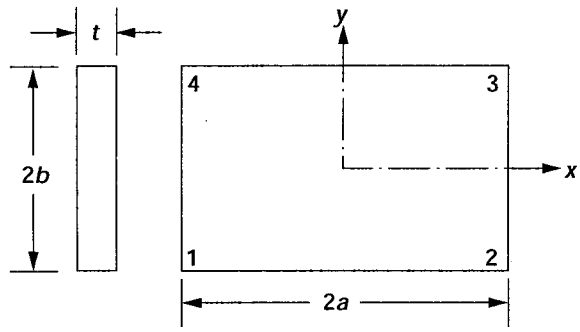

Figure 4.9.- Rectangular membrane element IFMRC0405.

Displacement interpolations for the element are as follows:

$$u(x,y)=\frac{1}{4}\left\{\left(1-\frac{x}{a}\right)\left(1-\frac{y}{b}\right)X_1+\left(1+\frac{x}{a}\right)\left(1-\frac{y}{b}\right)X_3+\left(1+\frac{x}{a}\right)\left(1+\frac{y}{b}\right)X_5+\left(1-\frac{x}{a}\right)\left(1+\frac{y}{b}\right)X_7\right\} \tag{4.56a}$$

$$v(x,y)=\frac{1}{4}\left\{\left(1-\frac{x}{a}\right)\left(1-\frac{y}{b}\right)X_2+\left(1+\frac{x}{a}\right)\left(1-\frac{y}{b}\right)X_4+\left(1+\frac{x}{a}\right)\left(1+\frac{y}{b}\right)X_6+\left(1-\frac{x}{a}\right)\left(1+\frac{y}{b}\right)X_8\right\} \tag{4.56b}$$

where $X_1, X_2, \ldots, X_8$ are the eight displacement degrees of freedom of the element. The force interpolation selected has the following form:

$$N_x = F_1 + F_2\frac{y}{b}$$

$$N_y = F_3 + F_4\frac{x}{a}$$

$$N_{xy} = F_5 \tag{4.57}$$

where $F_1, F_2, \ldots, F_5$ are the five force degrees of freedom.

The displacement function given by equation (4.56) represents a standard interpolation for a four-node membrane element. The membrane force interpolation given by equation (4.57) represents a constant shear (N_{xy}) and a linear variation for normal forces (N_x, N_y) along the y- and x-directions, respectively. The force interpolation will produce an acceptable stress distribution at the center of the element.

Substitution of equations (4.56) and (4.57) into equation (4.14) and integration yields the following (8×5) nonsymmetrical, equilibrium matrix $[B^e]$ for the element:

$$\left[B^e\right]=\begin{bmatrix} -b & b/3 & 0 & 0 & -a \\ 0 & 0 & -a & a/3 & -b \\ b & -b/3 & 0 & 0 & -a \\ 0 & 0 & -a & -a/3 & b \\ b & b/3 & 0 & 0 & a \\ 0 & 0 & a & a/3 & b \\ -b & -b/3 & 0 & 0 & a \\ 0 & 0 & a & -a/3 & -b \end{bmatrix} \tag{4.58}$$

Elemental flexibility matrix $[G^e]$: The elemental flexibility matrix is obtained by discretizing the complementary strain energy, which has the following form:

$$\left(\frac{A}{E}\right)\int_S \left\{\left(\frac{N_x}{t}\right)\left(\frac{N_x}{t}-\frac{\nu N_y}{t}\right)+\left(\frac{N_y}{t}\right)\left(\frac{N_y}{t}-\frac{\nu N_x}{t}\right)-2(1+\nu)\left(\frac{N_{xy}}{t}\right)^2\right\} dxdy \tag{4.59}$$

Substitution of the force polynomials (N_x, N_y, N_{xy}) from equation (4.57) into the complementary energy expression and integration yields the symmetrical flexibility matrix $[G^e]$, as follows:

$$\left[G^e\right]=\left(\frac{4ab}{Et}\right)\begin{bmatrix} 1 & 0 & -\nu & 0 & 0 \\ 0 & 1/3 & 0 & 0 & 0 \\ -\nu & 0 & 1 & 0 & 0 \\ 0 & 0 & 0 & 1/3 & 0 \\ 0 & 0 & 0 & 0 & 2(1+\nu) \end{bmatrix} \tag{4.60}$$

where E is the Young's modulus and ν is the Poisson's ratio.

System equilibrium equations: The equilibrium equations for the two-element cantilever beam are generated by following standard REC04 assembly procedure. The force and displacement degrees of freedom for the two elements are depicted in figure 4.10. The system equilibrium matrix $[B]$ of dimension (8×10), which is assembled from the two elemental matrices is as follows:

$$[B]=\begin{array}{c} \begin{array}{cccccccccc} \leftarrow & & \text{Element 1} & & \rightarrow & \leftarrow & & \text{Element 2} & & \rightarrow \end{array} \\ \left[\begin{array}{ccccc|ccccc} 1 & -1/3 & 0 & 0 & -3 & -1 & 1/3 & 0 & 0 & -3 \\ 0 & 0 & -3 & -1 & 1 & 0 & 0 & -3 & 1 & -1 \\ 0 & 0 & 0 & 0 & 0 & 1 & -1/3 & 0 & 0 & -3 \\ 0 & 0 & 0 & 0 & 0 & 0 & 0 & -3 & -1 & 1 \\ 0 & 0 & 0 & 0 & 0 & 1 & 1/3 & 0 & 0 & 3 \\ 0 & 0 & 0 & 0 & 0 & 0 & 0 & 3 & 1 & 1 \\ 1 & 1/3 & 0 & 0 & 3 & -1 & -1/3 & 0 & 0 & 3 \\ 0 & 0 & 3 & 1 & 1 & 0 & 0 & 3 & -1 & -1 \end{array}\right] \end{array} \tag{4.61}$$

The number of entries in any column corresponds to the entries in one elemental equilibrium matrix irrespective of the problem size. Thus, the system equilibrium matrix is a very sparse matrix.

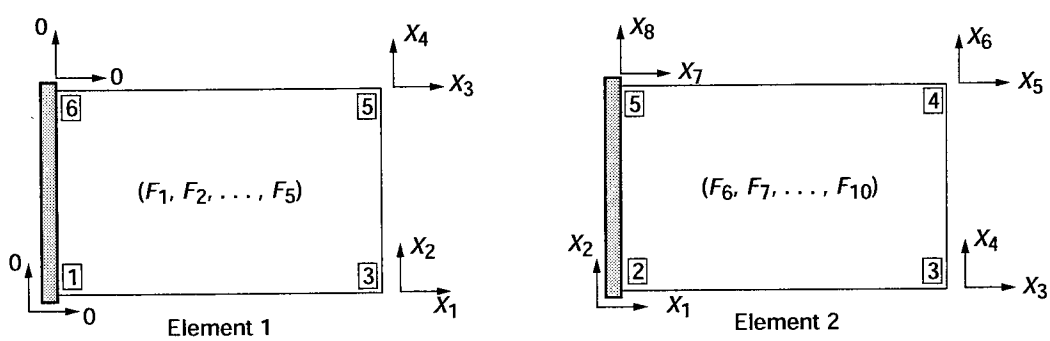

Figure 4.10.- Elemental equilibrium matrices.

Compatibility matrix: The compatibility matrix is obtained from the deformation displacement relations ($\{\beta\} = [B]^T\{X\}$). In the DDR, 10 deformations (which correspond to the 10 force variables) are expressed in terms of eight displacements ($X_1, X_2, \ldots, X_8$). The problem has two CC that are obtained by eliminating the eight displacements from the 10 DDR as

$$[C] = \begin{bmatrix} 0 & 0 & -1/3 & 1 & 0 & 0 & 0 & 0 & 0 & 0 \\ 0 & 0 & 2/3 & 0 & 0 & 0 & 0 & -1/3 & 1 & 0 \end{bmatrix} \tag{4.62}$$

Like the $[B]$ matrix, this (2×10) compatibility matrix $[C]$ is also sparse.

Flexibility matrix: The flexibility matrix for the problem is obtained by diagonal concatenation of the two elemental flexibility matrices as

$$[G] = \begin{bmatrix} [G]_1 & \\ & [G]_2 \end{bmatrix}$$

where

$$[G]_1 = [G]_2 = 1.6 \times 10^{-6} \begin{bmatrix} 1 & 0 & -0.3 & 0 & 0 \\ 0 & 1/3 & 0 & 0 & 0 \\ -0.3 & 0 & 1 & 0 & 0 \\ 0 & 0 & 0 & 1/3 & 0 \\ 0 & 0 & 0 & 0 & 2.6 \end{bmatrix} \tag{4.63}$$

The governing equations, $[S]\{F\} = \{P\}$, of the IFM (which can be obtained from the equilibrium matrix $[B]$, compatibility matrix $[C]$, and flexibility matrix $[G]$) have the following form:

$$\left[\begin{array}{ccccc|ccccc} 1 & -1/3 & 0 & 0 & -3 & -1 & 1/3 & 0 & 0 & -3 \\ 0 & 0 & -3 & -1 & 1 & 0 & 0 & -3 & 1 & -1 \\ 0 & 0 & 0 & 0 & 0 & 1 & -1/3 & 0 & 0 & -3 \\ 0 & 0 & 0 & 0 & 0 & 0 & 0 & -3 & -1 & 1 \\ 0 & 0 & 0 & 0 & 0 & 1 & 1/3 & 0 & 0 & 3 \\ 0 & 0 & 0 & 0 & 0 & 0 & 0 & 3 & 1 & 1 \\ 1 & 1/3 & 0 & 0 & 3 & -1 & -1/3 & 0 & 0 & 3 \\ 0 & 0 & 3 & 1 & 1 & 0 & 0 & 3 & -1 & -1 \\ \hline 1.6 & 0 & -5.33 & 5.33 & 0 & 0 & 0 & 0 & 0 & 0 \\ -3.2 & 0 & 10.66 & 0 & 0 & 1.6 & 0 & -5.33 & 5.33 & 0 \end{array}\right] \left\{\begin{array}{c} F_1 \\ F_2 \\ F_3 \\ F_4 \\ F_5 \\ F_6 \\ F_7 \\ F_8 \\ F_9 \\ F_{10} \end{array}\right\} = \left\{\begin{array}{c} 0 \\ 0 \\ 0 \\ 0 \\ 0 \\ -5 \\ 0 \\ -5 \\ 0 \\ 0 \end{array}\right\} \tag{4.64}$$

The first eight rows represent the EE, and the last two rows represent the CC. The last two CC rows are normalized by a factor of 10^{-7}. Solution of equation (4.64) yields the forces:

$$\begin{Bmatrix} F_1 \\ F_2 \\ F_3 \\ F_4 \\ F_5 \\ F_6 \\ F_7 \\ F_8 \\ F_9 \\ F_{10} \end{Bmatrix} = \begin{Bmatrix} 0 \\ 135 \\ 0 \\ 0 \\ -5 \\ 0 \\ 45 \\ 0 \\ 0 \\ -5 \end{Bmatrix} \tag{4.65}$$

From the forces, stresses can be generated from equation (4.57). For the second element, the stress components that are accurate at the center of the element are as follows:

$$\sigma_x = \frac{N_x}{t} = 540 \text{ psi}$$

$$\sigma_y = \frac{N_y}{t} = 0 \text{ psi} \tag{4.66}$$

$$\tau_{xy} = \frac{N_{xy}}{t} = -20 \text{ psi}$$

The shear stress at $\tau_{xy} = -20$ psi agrees with the average shear stress calculated from the strength of materials formula ($\tau = P/A = 10/[2(0.25)] = 20$ psi). There is no stress in the transverse direction ($\sigma_y = 0$), which agrees with the strength of materials results.

In contrast to the strength of materials results of 720 psi, the normal stress is 540 psi. The discrepancy occurs because σ_x (or N_x in eq. (4.57)) is uniform along the length of the element with the origin at its centroid (see fig. 4.11). At the elemental centroid, the strength of materials stress value at 540 psi is identical to that of the IFM solution. The element with five force unknowns given here to illustrate the IFM analysis procedure is a very simple element. This element should not be used for accurate stress analysis. Even for this element, the normal stress distribution can be improved by using a smaller element at the origin. For example when a smaller first element with a reduced length of 1 in. and an 11-in.-long second element are used to discretize the structure (as shown in fig. 4.12), the normal stress value improved to $\sigma_x = 690$ psi, which is 96-percent accurate.

The displacements can be obtained via back-substitution in the formulas ($\{X\} = [J][G]\{F\}$). The maximum value of the displacement, which occurs at node 5 or 6 along the y-direction, is

$$\delta_{\max} = -1.100 \times 10^{-3} \text{ in.} \tag{4.67}$$

$$\delta_{\text{beam solution}} = -1.152 \times 10^{-3} \text{ in.} \tag{4.68}$$

The displacements calculated with the two-element regular model are about 96-percent accurate, whereas the normal stress is 75-percent accurate. When the irregular model given in figure 4.12 was used, the stress was 96-percent accurate, whereas the accuracy achieved for displacement was only 86 percent with the maximum value for displacement ($\delta_{\text{irregular}} = 0.919 \times 10^{-3}$ in.). In other words, accurate displacement does not necessarily translate into a corresponding level of accuracy in the stresses.

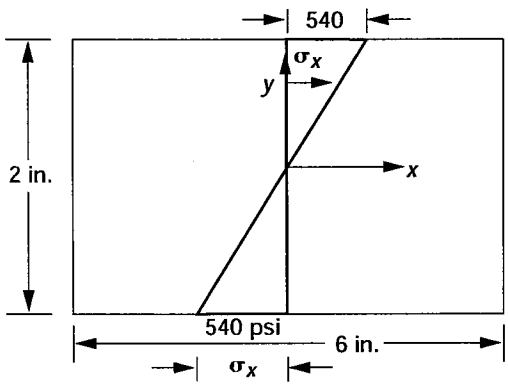

Figure 4.11.- Normal stress distribution in pounds per square inch for element 2.

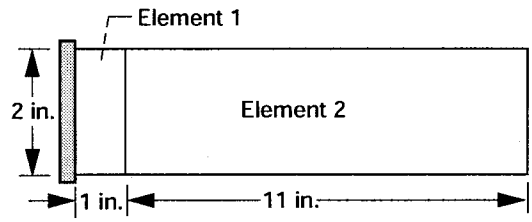

Figure 4.12.- Irregular model.

Dual Integrated Force Method.—The pseudostiffness matrix of the dual method is obtained by using the two-element model given in figure 4.8 following the procedure for the fixed bar in example 17. The system equation of IFMD has the following form:

$$10^6\begin{bmatrix} 6.1 & 0.0 & 1.3 & -0.1 & -2.6 & -1.3 & -3.4 & 0.0 \\ & 16.6 & 0.1 & 4.0 & -1.3 & -4.5 & 0.0 & -15.6 \\ & & 3.0 & -1.3 & -1.7 & -0.1 & -2.6 & 1.3 \\ & & & 8.3 & 0.1 & -7.8 & 1.3 & -4.5 \\ & & & & 3.0 & 1.3 & 1.3 & -0.1 \\ & & & & & 8.3 & 0.1 & 4.0 \\ & & \text{sym} & & & & 6.1 & 0.0 \\ & & & & & & & 16.6 \end{bmatrix}\begin{Bmatrix} X_1 \\ X_2 \\ X_3 \\ X_4 \\ X_5 \\ X_6 \\ X_7 \\ X_8 \end{Bmatrix} = \begin{Bmatrix} 0 \\ 0 \\ 0 \\ 0 \\ 0 \\ -5 \\ 0 \\ -5 \end{Bmatrix} \tag{4.69}$$

Solution of equation (4.69) yields the nodal displacements as

$$\{X\}_{ifmd} = 10^{-4}\begin{Bmatrix} -1.080 \\ -3.344 \\ -1.440 \\ -11.008 \\ 1.440 \\ -11.008 \\ 1.080 \\ -3.344 \end{Bmatrix}_{\text{in.}} \tag{4.70}$$

The displacements obtained by IFMD are identical to those obtained by IFM, with the maximum value at 1.1×10^{-3} in., which is identical to that for the IFM solution.

Stress calculation in IFMD.—In the dual method, the 10-component force vector $\{F\}$, which is back-calculated from the formula given by equation (4.42), $\{F\} = [G]^{-1}[B]^T\{X\}$, is identical to that obtained for IFM (see eq. (4.65)). From forces, stresses that can be computed as indicated for the IFM become identical to IFM results. In brief, both IFM and IFMD yield identical results for stresses and displacements, as expected.

Regular stiffness method.—The regular stiffness matrix for the rectangular element is obtained by discretizing the strain energy (U_p) given by equation (4.71) for the displacement functions (u, v) given by equation (4.56).

$$U_p = \frac{E}{2\left(1-\nu^2\right)} \iint \left\{ \left(\frac{\partial u}{\partial x}\right)^2 + \left(\frac{\partial u}{\partial y}\right)^2 - 2\nu\left(\frac{\partial u}{\partial x}\right)\left(\frac{\partial u}{\partial y}\right) + \frac{(1-\nu)}{2}\left(\frac{\partial u}{\partial y} + \frac{\partial v}{\partial x}\right)^2 \right\} dx\, dy\, dz \tag{4.71}$$

Using the standard stiffness procedure, one can obtain the equations for the two-element cantilever beam as

$$10^6 \begin{bmatrix} 7.6 & 0.0 & 0.5 & -0.1 & -1.9 & -1.3 & -4.8 & 0.0 \\ & 17.1 & 0.1 & 3.8 & -1.3 & -4.3 & 0.0 & -16.1 \\ & & 3.8 & -1.3 & -2.4 & -0.1 & -1.9 & 1.3 \\ & & & 8.6 & 0.1 & -8.1 & 1.3 & -4.3 \\ & & & & 3.8 & 1.3 & 0.5 & -0.1 \\ & & & & & 8.6 & 0.1 & 3.8 \\ & & \text{sym} & & & & 7.6 & 0.0 \\ & & & & & & & 17.1 \end{bmatrix} \begin{Bmatrix} X_1 \\ X_2 \\ X_3 \\ X_4 \\ X_5 \\ X_6 \\ X_7 \\ X_8 \end{Bmatrix} = \begin{Bmatrix} 0 \\ 0 \\ 0 \\ 0 \\ 0 \\ -5 \\ 0 \\ -5 \end{Bmatrix} \tag{4.72}$$

Solution of equation (4.72) yields the displacement vector as follows:

$$\{X\}_{\text{stiffness}} = 10^{-4} \begin{Bmatrix} -0.237 \\ -0.815 \\ -0.316 \\ -2.576 \\ 0.316 \\ -2.576 \\ 0.237 \\ -0.815 \end{Bmatrix}_{\text{in.}} \tag{4.73}$$

The maximum value of displacement ($\delta_{max} = -2.576\times10^{-4}$) is much smaller, and it is only 22 percent of that of the strength of materials solution.

For the irregular model shown in figure 4.12, the following displacement solution is obtained:

$$\{X\}_{\text{irregular}} = 10^{-4} \begin{Bmatrix} -0.193 \\ -0.114 \\ -0.287 \\ -2.944 \\ 0.287 \\ -2.944 \\ 0.193 \\ -0.114 \end{Bmatrix}_{\text{in.}} \tag{4.74}$$

For the irregular model, maximum displacement ($\delta_{max} = -2.944$) is slightly better than the regular model and it is 25.6 percent of that of the strength of materials solution. Stresses obtained from the stiffness method for the two crude elements are very inaccurate.

MSC/NASTRAN stiffness solution.—The MSC/NASTRAN solution to the cantilevered beam problem is obtained with the CQUAD–4 element. This popular element is an advanced element in comparison to the simple IFM element RC0405. The final MSC/NASTRAN stiffness equation for the problem has the following form:

$$10^6\begin{bmatrix} 6.1 & 0.0 & 1.2 & -0.1 & -2.6 & -1.3 & -3.4 & 0.0 \\ & 16.9 & 0.1 & 3.8 & -1.3 & -4.3 & 0.0 & -16.0 \\ & & 3.0 & -1.3 & -1.7 & -0.1 & -2.6 & 1.3 \\ & & & 8.4 & 0.1 & -8.0 & 1.3 & -4.3 \\ & & & & 3.0 & 1.3 & 1.2 & -0.1 \\ & \text{sym} & & & & 8.4 & 0.1 & 3.8 \\ & & & & & & 6.1 & 0.0 \\ & & & & & & & 16.9 \end{bmatrix}\begin{Bmatrix} X_1 \\ X_2 \\ X_3 \\ X_4 \\ X_5 \\ X_6 \\ X_7 \\ X_8 \end{Bmatrix} = \begin{Bmatrix} 0 \\ 0 \\ 0 \\ 0 \\ 0 \\ -5 \\ 0 \\ -5 \end{Bmatrix} \tag{4.75}$$

MSC/NASTRAN displacement for the problem obtained from solution of its equation is as follows:

$$\{X\}_{\text{MSC/NASTRAN}} = 10^{-4}\begin{Bmatrix} -0.983 \\ -3.052 \\ -1.310 \\ -10.036 \\ 1.310 \\ -10.036 \\ 0.983 \\ -3.052 \end{Bmatrix}_{\text{in.}} \tag{4.76}$$

The maximum stress generated by MSC/NASTRAN, which occurs for the element 1 centroid, is $\sigma_x = 540$ psi. The maximum value for displacement ($\delta_{max} = -0.10036\times10^{-3}$ in.) is 87 percent of the strength of materials solution.

The MSC/NASTRAN solutions for the two-element irregular model shown in figure 4.12 are as follows. The displacement solution is

$$\{X\}_{\text{irregular}} = 10^{-4}\begin{Bmatrix} -0.209 \\ -0.122 \\ -1.310 \\ -8.671 \\ 1.310 \\ -8.671 \\ 0.209 \\ -0.122 \end{Bmatrix}_{\text{in.}} \tag{4.77}$$

The maximum displacement is 72.8 percent of the strength of materials result. Stress for the model is 97.9 percent accurate, which is identical to that of the IFM/IFMD solution.

IFM frequency analysis.—The IFM frequency equation $\left\{[S]-\omega^2\left[([M][J][G])/0\right]\right\}\bar{F}=0$ for the cantilever beam depicted in figure 4.8 has the following explicit form:

$$
\left[\left[\begin{array}{ccccc|ccccc}
1 & -1/3 & 0 & 0 & -3 & -1 & 1/3 & 0 & 0 & -3 \\
0 & 0 & -3 & -1 & 1 & 0 & 0 & -3 & 1 & -1 \\
0 & 0 & 0 & 0 & 0 & 1 & -1/3 & 0 & 0 & -3 \\
0 & 0 & 0 & 0 & 0 & 0 & 0 & -3 & -1 & 1 \\
0 & 0 & 0 & 0 & 0 & 1 & 1/3 & 0 & 0 & 3 \\
0 & 0 & 0 & 0 & 0 & 0 & 0 & 3 & 1 & 1 \\
1 & 1/3 & 0 & 0 & 3 & -1 & -1/3 & 0 & 0 & 3 \\
0 & 0 & 3 & 1 & 1 & 0 & 0 & 3 & -1 & -1 \\
\hline
1.6 & 0 & -5.33 & 5.33 & 0 & 0 & 0 & 0 & 0 & 0 \\
-3.2 & 0 & 10.66 & 0 & 0 & 1.6 & 0 & -5.33 & 5.33 & 0
\end{array}\right] - \omega^2 \times 10^{-8} \left[\begin{array}{cccccccccc}
0 & 0 & 0 & 0 & 0 & 0 & 0 & 0 & 0 & 0 \\
0 & 0 & 0 & 0 & 0 & 0 & 0 & 0 & 0 & 0 \\
0.30 & -0.31 & -0.06 & -0.02 & 0 & 0.31 & -0.31 & -0.09 & \varepsilon^a & 0 \\
-\varepsilon^a & -2.80 & 0.02 & \varepsilon^a & 0.80 & 0.02 & -0.93 & -0.06 & -0.04 & 0.80 \\
0.30 & 0.31 & -0.06 & -0.02 & 0 & 0.31 & 0.31 & -0.09 & \varepsilon^\alpha & 0 \\
\varepsilon^a & -2.80 & -0.02 & \varepsilon^\alpha & 0.80 & -0.02 & -0.93 & 0.06 & 0.04 & 0.80 \\
0 & 0 & 0 & 0 & 0 & 0 & 0 & 0 & 0 & 0 \\
0 & 0 & 0 & 0 & 0 & 0 & 0 & 0 & 0 & 0 \\
\hline
0 & 0 & 0 & 0 & 0 & 0 & 0 & 0 & 0 & 0 \\
0 & 0 & 0 & 0 & 0 & 0 & 0 & 0 & 0 & 0
\end{array}\right]\right] \{F\} = 0 \tag{4.78}
$$

where $6.6\times10^{-3} \le \varepsilon^a \le 7.6\times10^{-3}$.

The IFM eigenvalue problem for the beam is an unsymmetrical (10×10) set of equations. The four nonzero rows in the mass matrix represent the participation of the lumped masses located at nodes 3 and 4. Participation of all 10 force degrees of freedom is essential for the determination of correct frequency and force mode shapes (refs. 6, 9, and 29). A correct dynamic analysis formulation cannot be obtained through any elaborate manipulation of the equations of the classical force method (ref. 20), because this approach cannot consider the mass or the inertia for redundant members. The four frequencies obtained for the problem are given in table II. Table III shows the fundamental force mode shape along with the displacement mode shape calculated by back-substitution with equation (4.2).

TABLE II.—FREQUENCIES FOR A CANTILEVERED BEAM WITH LUMPED MASS

Frequency numbers	Frequencies, Hz				
	Analytical solution	IFM	IFMD	Stiffness method	MSC/NASTRAN QUAD–4 element
1	168.32	170.629	170.629	353.073	178.707
2	1052.00	2031.261	2031.261	2032.188	2031.922
3	2950.38	2534.278	2534.278	4874.846	2647.656
4	5786.00	9298.475	9298.475	9599.293	9510.976

TABLE III. —FORCE-AND DISPLACEMENT-MODE SHAPES FOR FUNDAMENTAL FREQUENCY OF CANTILEVERED BEAM

IFM		IFMD		Stiffness method[a]	MSC/NASTRAN QUAD–4 element
Force mode shape	Displacement mode shape	Force mode shape	Displacement mode shape	Displacement mode shape	Displacement mode shape
0.0	9.78×10^{-2}	0.0	9.78×10^{-2}	9.17×10^{-2}	9.8×10^{-2}
1.0	.303	1.0	0.303	0.315	.303
0.0	.131	0.0	.131	.123	.131
0.0	1.0	0.0	1.0	1.0	1.000
-3.65×10^{-2}	–.131	-3.65×10^{-2}	–.131	–.123	–.131
0.0	1.0	0.0	1.0	1.0	1.000
0.343	-9.78×10^{-2}	0.343	-9.78×10^{-2}	-9.18×10^{-2}	-9.78×10^{-2}
0.0	.303	0.0	.303	.315	.303
0.0	----------	0.0	----------	----------	----------
-3.65×10^{-2}	----------	-3.65×10^{-2}	----------	----------	----------

[a]Force mode shape could not be determined.

IFMD frequency analysis.—The IFMD frequency equation, neglecting damping, $\left([D]-\omega^2[M]\right)\overline{X}=0$ for the two-element cantilevered beam depicted in figure 4.5, has the following explicit form:

$$\left[10^6\begin{bmatrix} 6.1 & 0.0 & 1.3 & -0.1 & -2.6 & -1.3 & -3.4 & 0.0 \\ & 16.6 & 0.1 & 4.0 & -1.3 & -4.5 & 0.0 & -15.6 \\ & & 3.0 & -1.3 & -1.7 & -0.1 & -2.6 & 1.3 \\ & & & 8.3 & 0.1 & -7.8 & 1.3 & -4.5 \\ & & & & 3.0 & 1.3 & 1.3 & -0.1 \\ & \text{sym} & & & & 8.3 & 0.1 & 4.0 \\ & & & & & & 6.1 & 0.0 \\ & & & & & & & 16.6 \end{bmatrix} - \omega^2\times10^{-3}\begin{bmatrix} 0 & & & & & & & \\ & 0 & & & & & & \\ & & 4 & & & & & \\ & & & 4 & & & & \\ & & & & 4 & & & \\ & & & & & 4 & & \\ & & & & & & 0 & \\ & & & & & & & 0 \end{bmatrix}\right]X=0 \qquad (4.79)$$

There are eight equations for the dual method. The four nonzero entries in the diagonal mass matrix in equation (4.79) correspond to the lumped masses. The structure of the IFMD eigenvalue equation appears similar to standard stiffness equations. (The differences between IFMD and the stiffness equations are examined later.) The frequencies obtained by IFMD are given in table II. The fundamental displacement mode shape along with the force mode back-

calculated from equation (4.5) are shown in table III.

The IFM equations are unsymmetrical, whereas those for IFMD are symmetrical. Either set of equations can be used to obtain frequency, stress, and displacement mode shapes. The symmetrical form can use popular eigenvalue solution routines (such as DSPGV), which are readily available in the LAPACK public domain library (ref. 36). For unsymmetrical eigenvalue analysis, the LAPACK routine DGEGV is used (ref. 36). For static analysis, Harwell library routines (MA28AD, MA28CD, MA29BD, MA29CD, MA47AD, MA47BD, MA47CD, MA47ID) are used (ref. 40). However, the unsymmetrical IFM version can be more useful than IFMD in design and sensitivity analysis (ref. 22). Furthermore, the IFM solution that provides $r = n - m$ number of zero frequencies and associated eigenvectors corresponding to the r number of compatibility conditions can be used to verify solution accuracy.

Stiffness method frequency analysis.—The stiffness method frequency equations $\left([K]-\omega^2[M]\right)\overline{X}=0$ for the cantilever beam depicted in figure 4.8 have the following explicit form:

$$\left[10^6\begin{bmatrix} 7.6 & 0.0 & 0.5 & -0.1 & -1.9 & -1.3 & -4.8 & 0.0 \\ & 17.1 & 0.1 & 3.8 & -1.4 & -4.3 & 0.0 & -16.1 \\ & & 3.8 & -1.3 & -2.4 & -0.1 & -1.9 & 1.3 \\ & & & 8.6 & 0.1 & -8.1 & 1.3 & -4.3 \\ & & & & 3.8 & 1.3 & 0.5 & -0.1 \\ & & & & & 8.6 & 0.1 & 3.8 \\ & & \text{sym} & & & & 7.6 & 0.0 \\ & & & & & & & 17.1 \end{bmatrix} - \omega^2 \times 10^{-3}\begin{bmatrix} 0 & & & & & & & \\ & 0 & & & & & & \\ & & 4 & & & & & \\ & & & 4 & & & & \\ & & & & 4 & & & \\ & & & & & 4 & & \\ & & & & & & 0 & \\ & & & & & & & 0 \end{bmatrix}\right]\{X\} = 0 \qquad (4.80)$$

Frequency and displacement modes obtained are presented in tables II and III. Stress mode shapes cannot be calculated readily in the stiffness method.

MSC/NASTRAN frequency analysis.—MSC/NASTRAN equations for a two-element beam with a CQUAD4 element and appropriate condensation have the following form:

$$\left[10^6\begin{bmatrix} 6.2 & 0.0 & 1.2 & -0.1 & -2.6 & -1.3 & -3.4 & 0.0 \\ & 17.0 & 0.1 & 3.9 & -1.3 & -4.4 & 0.0 & -16.0 \\ & & 3.1 & -1.3 & -1.7 & -0.1 & -2.6 & 1.3 \\ & & & 8.5 & 0.1 & -8.0 & 1.3 & -4.4 \\ & & & & 3.1 & 1.3 & 1.2 & -0.1 \\ & \text{sym} & & & & 8.5 & 0.1 & 3.9 \\ & & & & & & 6.2 & 0.0 \\ & & & & & & & 17.0 \end{bmatrix} - \omega^2 \times 10^{-3}\begin{bmatrix} 0 & & & & & & & \\ & 0 & & & & & & \\ & & 3.9 & & & & & \\ & & & 3.9 & & & & \\ & & & & 3.9 & & & \\ & & & & & 3.9 & & \\ & & & & & & 0 & \\ & & & & & & & 0 \end{bmatrix}\right]\{X\} = 0 \qquad (4.81)$$

Tables II and III give the MSC/NASTRAN results for the problem.

This discussion is centered around the fundamental frequency because other frequencies are expected to be inaccurate and thus observed (see table II) because of the two-element crude model. IFM and IFMD yield identical

frequencies at 170.6 Hz, which is about 1 percent higher than the beam solution of 168.3 Hz. The stiffness method yields a very high frequency at 353 Hz or about twice that of the beam solution. The MSC/NASTRAN QUAD–4 element produces a frequency of 178.7 Hz, which is 6.2 percent higher than that produced by the beam solution.

Only IFM and IFMD provide force mode shapes that are identical, as expected. Displacement modes generated by all four methods (IFM, IFMD, stiffness, and MSC/NASTRAN) agree quite well.

Illustrative Example 18: Single-Bay Truss

A square aluminum truss with a length of 20 in. and a Young's modulus E of 10×10^6 psi is depicted in figure 4.13. The areas of both diagonal bars are equal to $\sqrt{2}/2\,\text{in.}^2$; all other bars have an area of 1 in.^{2} The solution is required for two load cases. Load case 1 consists of a mechanical load of 1000 lb at node 1 along the y-direction as shown in figure 4.13. Load case 2 consists of an elevated temperature ($\Delta T = 100$ °C) for member 3, which has a coefficient of thermal expansion α of 6×10^{-6} per °F. The problem was solved separately for mechanical and thermal loads (see Illustrative Example 11). A solution for both thermal and mechanical loads can be obtained by superpositioning the two solutions.

Solution for mechanical loads: Both mechanical and thermal loads require the same EE, which are assembled from the six elemental matrices to obtain four EE ($[B]\{F\} = \{P\}$). The equilibrium matrix ($[B]_i$) for the ith bar element with internal force (F_i) and direction cosines (ℓ, m) can be written (see eq. 4.36) as

$$[B]_i = \begin{bmatrix} -\ell \\ -m \\ \ell \\ m \end{bmatrix}_i F_i \tag{4.82}$$

The EE for the six bars are as follows

$$\begin{array}{c} dof \downarrow \\ [B]_1 = \begin{array}{c} 0 \\ 0 \\ 1 \\ 2 \end{array}\begin{bmatrix} -1 \\ 0 \\ 1 \\ 0 \end{bmatrix}_{\substack{\ell=1 \\ m=0}} F_1 \end{array} \qquad [B]_2 = \begin{array}{c} 0 \\ 0 \\ 1 \\ 2 \end{array}\begin{bmatrix} -1/\sqrt{2} \\ -1/\sqrt{2} \\ 1/\sqrt{2} \\ 1/\sqrt{2} \end{bmatrix}_{\substack{\ell=m= \\ 1/\sqrt{2}}} F_2 \qquad [B]_3 = \begin{array}{c} 1 \\ 2 \\ 3 \\ 4 \end{array}\begin{bmatrix} 0 \\ 1 \\ 0 \\ -1 \end{bmatrix}_{\substack{\ell=0 \\ m=-1}} F_3$$

$$[B]_4 = \begin{array}{c} 0 \\ 0 \\ 3 \\ 4 \end{array}\begin{bmatrix} -1/\sqrt{2} \\ 1/\sqrt{2} \\ 1/\sqrt{2} \\ -1/\sqrt{2} \end{bmatrix}_{\substack{\ell=1/\sqrt{2} \\ m=-1/\sqrt{2}}} F_4 \qquad [B]_5 = \begin{array}{c} 0 \\ 0 \\ 3 \\ 4 \end{array}\begin{bmatrix} -1 \\ 0 \\ 1 \\ 0 \end{bmatrix}_{\substack{\ell=1 \\ m=0}} F_5 \qquad [B]_6 = \begin{array}{c} 0 \\ 0 \\ 0 \\ 0 \end{array}\begin{bmatrix} 0 \\ 1 \\ 0 \\ -1 \end{bmatrix}_{\substack{\ell=0 \\ m=-1}} F_6 \tag{4.83}$$

The assembly of the elemental EE matrices along the displacements (X_1, X_2, X_3, X_4) yields the following EE:

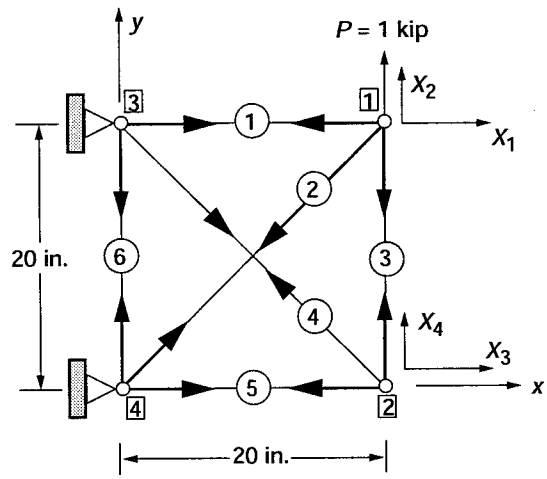

Figure 4.13.- Single-bay truss.

$$\begin{bmatrix} 1 & 1/\sqrt{2} & 0 & 0 & 0 & 0 \\ 0 & 1/\sqrt{2} & 1 & 0 & 0 & 0 \\ 0 & 0 & 0 & 1/\sqrt{2} & 1 & 0 \\ 0 & 0 & -1 & -1/\sqrt{2} & 0 & 0 \end{bmatrix} \begin{Bmatrix} F_1 \\ F_2 \\ F_3 \\ F_4 \\ F_5 \\ F_6 \end{Bmatrix} = \begin{Bmatrix} 0 \\ 1000 \\ 0 \\ 0 \end{Bmatrix} \tag{4.84}$$

The sixth column is null because the sixth bar (F_6) is connected to fully restrained nodes 3 and 4, as shown in figure 4.13. In IFM, null columns are accepted in the equilibrium equations of indeterminate structures without any adverse effects.

Compatibility conditions: The six forces are expressed in terms of four EE, thus there are two CC. The CC are obtained first by writing the six DDR and then by eliminating the four displacements $\{X\}$ from the DDR. The DDR ($\{\beta\} = [B]\{X\}$) for the problem can be written as

$$\beta_1 = X_1 \qquad \beta_4 = \frac{X_3 - X_4}{\sqrt{2}}$$

$$\beta_2 = \frac{X_1 + X_2}{\sqrt{2}} \qquad \beta_5 = X_3$$

$$\beta_3 = X_2 - X_4 \qquad \beta_6 = 0 \tag{4.85}$$

Elimination of the four displacements ($X_1, X_2, \ldots, X_4$) from the six DDR yields the two compatibility conditions in six deformations:

$$\begin{bmatrix} 0 & 0 & 0 & 0 & 0 & 1 \\ 1 & -2\sqrt{2} & 1 & -2\sqrt{2} & 1 & 0 \end{bmatrix} \begin{Bmatrix} \beta_1 \\ \beta_2 \\ \beta_3 \\ \beta_4 \\ \beta_5 \\ \beta_6 \end{Bmatrix} = 0 \tag{4.86}$$

The second CC in equation (4.83), (that is, $\beta_6 = 0$) corresponds to the sixth element, with the null sixth column in the EE given by equation (4.80).

In the absence of temperature effect, the six deformations are related to member forces through the flexibility coefficients as follows:

$$\beta_1 = \left(\frac{\ell F_1}{AE}\right)_1 = \frac{20F_1}{E} \qquad \beta_2 = \frac{40F_2}{E} \qquad \beta_3 = \frac{20F_3}{E} \qquad \beta_4 = \frac{40F_1}{E} \qquad \beta_5 = \frac{20F_5}{E} \qquad \beta_6 = \frac{20F_6}{E} \tag{4.87a}$$

The flexibility matrix $[G]$ from the FDR $\{\beta\} = [G]\{F\}$ can be formed from the diagonal concatenation of the flexibility coefficients as

$$[G] = \frac{1}{E}\begin{bmatrix} 20 & & & & & \\ & 40 & & & & \\ & & 20 & & & \\ & & & 40 & & \\ & & & & 20 & \\ & & & & & 20 \end{bmatrix} \tag{4.87b}$$

Thermal effect: For the problem, temperature in member 3 is included in the deformation for that member as

$$\beta_3 = \beta_3^e + \beta_3^0$$

$$\beta_3^e = \frac{20F_3}{E} \quad \text{(as before)}$$

$$\beta_3^0 = \alpha T\ell = 12\times10^{-3} \quad \text{and} \quad \beta_1^0 = \beta_2^0 = \beta_4^0 = \beta_5^0 = \beta_6^0 = 0 \tag{4.88}$$

The effective initial deformation vector $\{\delta R\}$ for the temperature in member 3 can be calculated as

$$\{\delta R\} = -[C]\{\beta\}^0 = \begin{Bmatrix} 0 \\ -12\times10^{-3} \end{Bmatrix} \tag{4.89}$$

The CC, $[C][G]\{F\} = \{\delta R\}$, are obtained in terms of forces by eliminating deformations between the CC in deformation and the FDR as

$$\frac{20}{E}\begin{bmatrix} 0 & 0 & 0 & 0 & 0 & 1 \\ 1 & -2\sqrt{2} & 1 & -2\sqrt{2} & 1 & 0 \end{bmatrix}\begin{Bmatrix} F_1 \\ F_2 \\ F_3 \\ F_4 \\ F_5 \\ F_6 \end{Bmatrix} = \begin{Bmatrix} \text{Thermal} \\ 0 \\ -12\times10^{-3} \end{Bmatrix} \tag{4.90}$$

IFM governing equations ([S]{F} = {P}):* The IFM governing equation is obtained by coupling the EE and the CC:

$$\begin{bmatrix} 1 & 1/\sqrt{2} & 0 & 0 & 0 & 0 \\ 0 & 1/\sqrt{2} & 1 & 0 & 0 & 0 \\ 0 & 0 & 0 & 1/\sqrt{2} & 1 & 0 \\ 0 & 0 & -1 & -1/\sqrt{2} & 0 & 0 \\ 0 & 0 & 0 & 0 & 0 & 1 \\ 1 & -2\sqrt{2} & 1 & -2\sqrt{2} & 1 & 0 \end{bmatrix} \begin{Bmatrix} F_1 \\ F_2 \\ F_3 \\ F_4 \\ F_5 \\ F_6 \end{Bmatrix} = \begin{Bmatrix} \overset{\text{Mechanical}}{\begin{matrix} 0 \\ 1000 \\ 0 \\ 0 \\ 0 \\ 0 \end{matrix}} \end{Bmatrix} \begin{Bmatrix} \overset{\text{Thermal}}{\begin{matrix} 0 \\ 0 \\ 0 \\ 0 \\ 0 \\ -6\times10^3 \end{matrix}} \end{Bmatrix} \tag{4.91}$$

Solving the IFM equations yields the forces as

$$\begin{Bmatrix} F_1 \\ F_2 \\ F_3 \\ F_4 \\ F_5 \\ F_6 \end{Bmatrix} = \begin{Bmatrix} \overset{\text{Mechanical}}{\begin{matrix} -545.5 \\ 771.4 \\ 454.5 \\ -642.8 \\ 454.5 \\ 0.0 \end{matrix}} \end{Bmatrix}_{\text{lb}} \quad \text{and} \quad \begin{Bmatrix} \overset{\text{Thermal}}{\begin{matrix} -545.45 \\ 771.39 \\ -545.45 \\ 771.39 \\ -545.45 \\ 0 \end{matrix}} \end{Bmatrix}_{\text{lb}} \tag{4.92}$$

Displacements back-calculated from the IFM formula ($\{X\} = [J][G]\{F\} + \{\beta\}^0$) are

$$\begin{Bmatrix} X_1 \\ X_2 \\ X_3 \\ X_4 \end{Bmatrix}_{\text{in.}} = \begin{Bmatrix} \overset{\text{Mechanical}}{\begin{matrix} -1.091 \\ 5.454 \\ 0.909 \\ 4.545 \end{matrix}} \end{Bmatrix} \times 10^{-3} \quad \text{and} \quad \begin{Bmatrix} \overset{\text{Thermal}}{\begin{matrix} -1.091 \\ 5.454 \\ -1.090 \\ -5.454 \end{matrix}} \end{Bmatrix} \times 10^{-3} \tag{4.93}$$

Appendix A
Classification of Variables and Methods of Structural Mechanics

Structural mechanics deal with three types of variables: (1) force F, (2) displacement X, and (3) deformation β. These variables are related through four types of relations: (1) equilibrium equations (EE), (2) compatibility conditions (CC), (3) force deformation relations (FDR), and (4) deformation displacement relations (DDR). The choice of primary variables and the requisite relations form the different structural mechanics methods (see table I): (1) the Integrated Force Method, (2) the displacement method, (3) hybrid method, and (4) total formulation. This appendix provides a brief description of the variables and their relationships. The methods of structural mechanics can be developed with the matrices of the equilibrium equations, compatibility conditions, and force deformation relations.

Consider the equilibrium equations, which relate internal force $\{F\}$ to load $\{P\}$ through the equilibrium matrix $[B]$, as

$$[B]\{F\} = \{P\} \tag{A.1a}$$

Force $\{F\}$ is considered to be the primal variable of the EE. In this report, the EE is obtained as the vectorial summation of forces $\{F\}$ and loads $\{P\}$, see equation (1.2) as an example. Alternatively, it can be obtained as the stationary condition of a potential function π^e that can be defined as

$$\pi^e = \{X\}^T [B]\{F\} - \{X\}^T \{P\} \tag{A.1b}$$

The stationary condition of π^e with respect to a certain set of variables yields the EE. The "set of variables" is referred to as the dual variables of the equilibrium equations. Displacements $\{X\}$ are the dual variables of the equilibrium equations, or

$$\delta_{\{X\}}\left(\pi^e\right) \Rightarrow [B]\{F\} - \{P\} = 0 \tag{A.1c}$$

Forces $\{F\}$ are the primal variables of the EE, whose dual variables are the displacements $\{X\}$. The concept illustrated for the equilibrium equation can be extended to other relations. For example, deformations $\{\beta\}$ are the primal variables of the compatibility conditions ($[C]\{\beta\} = 0$), and redundants $\{R\}$ are its dual variables. Likewise, displacements $\{X\}$ are the primal variables of the deformation displacement relations ($[B]^T\{X\} = \{\beta\}$), whose dual variables are the forces $\{F\}$. For the force deformation relations ($[G]\{F\} = \{\beta\}$), forces $\{F\}$ represent both the primal and dual variables. If the primal and dual variables are identical, such as for the FDR, then only its coefficient matrix $[G]$ becomes a symmetrical matrix.

The IFM with force $\{F\}$ as the unknown is the force method with the governing equation

$$[S]\{F\} = \{P\} \tag{A.2a}$$

The IFMD with displacement $\{X\}$ as the unknown becomes the displacement method with the governing equation

$$[D]\{X\} = \{P\} \tag{A.2b}$$

The governing equations of the hybrid method with force $\{F\}$ and displacement $\{X\}$ as the unknowns can be written as

$$\begin{bmatrix} S & 0 \\ -JG & I \end{bmatrix} \begin{Bmatrix} F \\ X \end{Bmatrix} = \begin{Bmatrix} P \\ 0 \end{Bmatrix} \tag{A.2c}$$

The coefficient matrix of the hybrid method is essentially uncoupled because forces can be determined first; then, the displacements can be recovered by back-substitution as $\{X\} = [J][G]\{F\}$.

The governing equations of the total formulation with force $\{F\}$, displacement $\{X\}$, and deformation $\{\beta\}$ as the unknowns can be written as

$$\begin{bmatrix} S & 0 & 0 \\ -JG & I & 0 \\ -G & 0 & I \end{bmatrix} \begin{Bmatrix} F \\ X \\ \beta \end{Bmatrix} = \begin{Bmatrix} P \\ 0 \\ 0 \end{Bmatrix} \tag{A.2d}$$

The coefficient matrix of the total formulation also can be considered to be an uncoupled matrix. All four methods given by equation (A.2) should provide the same solution fidelity if the key EE matrix $[B]$ and the FDR matrix $[G]$ are generated correctly. From known forces $\{F\}$, displacements $\{X\}$ can be back-calculated. Likewise, from displacements, forces can also be recovered by back-substitution (see eq. (4.2)). Thus, traditionally, the force method, or the IFM, and the displacement method, or the IFMD, are considered to be the two principal structural mechanics formulations. Table I summarizes the analysis methods, their primal variables, and their associated variational functionals.

Appendix B
Solution Through Superposition and Redundant Techniques

Simple indeterminate problems can be analyzed through superposition and redundant techniques. Both techniques bypass the explicit use of the compatibility conditions. In these techniques, the problem is separated into determinate subproblems that can be solved without the compatibility conditions. The solution to an indeterminate problem is generated by adding the subproblem solutions. The redundant and the superposition techniques are illustrated by considering a beam as an example. A beam of length ℓ is fixed at both ends and is subjected to a uniformly distributed load of intensity q per unit length. The IFM solution for the problem was given earlier under Illustrative Example 6.

Solution Through the Superposition Method

A uniform beam with constant rigidity EI is shown in figure B.1(a). The free-body diagram of this beam is shown in figure B.1(b). Because of symmetry, the reactions are equal ($R_A = R_B$) and the transverse equilibrium equation yields their values:

$$R_A = R_B = R = \frac{q\ell}{2} \tag{B.1}$$

Likewise, because of symmetry, the fixed-end moments at support A and B are equal ($M_A = M_B$), as shown in figure B.1(b):

$$M_A = M_B = M \tag{B.2}$$

Analysis of the problem requires the determination of the single moment M. The superposition technique replaces the real structure with two determinate structures, which are shown in figures B.1(c) and B.1(d). The first structure, shown in figure B.1(c), is a determinate structure subjected to the given external load q that produces a symmetrical rotation θ_1 at both support A and B. The second structure, shown in figure B.1(d), is the same determinate structure, but it is subjected to moment M_r, producing the symmetrical deformations θ_2.

The key idea of the superposition technique is to generate a solution to the original indeterminate problem by adding the two determinate solutions. For the problem, the superposition technique constrains the determinate slopes ($\theta_1 + \theta_2 = 0$) to zero to reinstate the fixed-end boundary conditions ($\theta = 0$). The superposition method has two steps. In the first, solutions are obtained for the two determinate subproblems shown in figures B.1(c) and B.1(d). In the second step, the two determinate solutions are added to obtain the solution for the indeterminate problem.

Step 1—Determinate solutions: The two determinate problems depicted in figures B.1(c) and B.1(d) can be solved from equilibrium considerations only.

Solution to first determinate subproblem.—For the problem depicted in figure B.1(c), the bending moment at a location x can be calculated as

$$\mathcal{M}_1(x) = \frac{q\ell x}{2} - \frac{qx^2}{2} \tag{B.3}$$

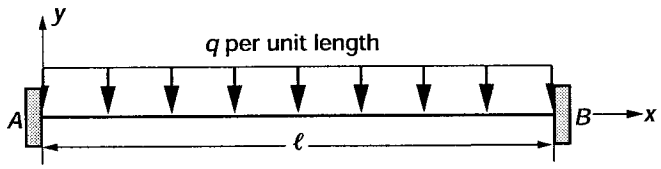

(a) Beam clamped at both ends.

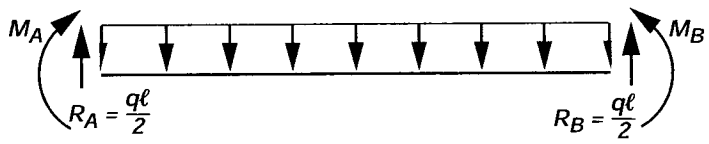

(b) Free-body diagram.

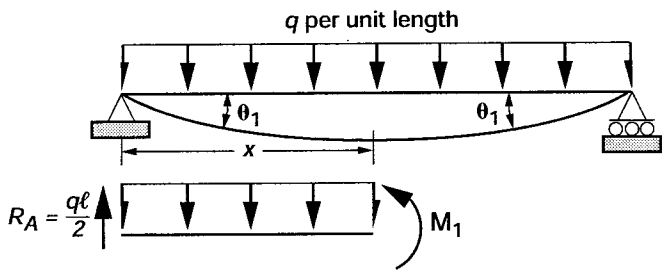

(c) Subproblem 1- simply-supported beam subjected to given load.

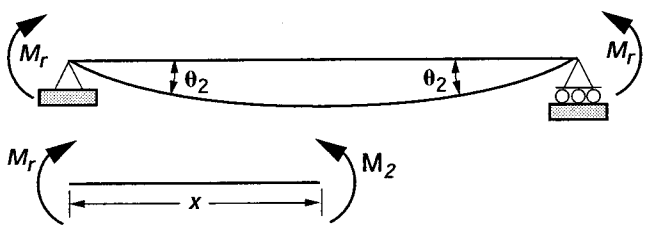

(d) Subproblem 2- beam subjected to end moment *M*.

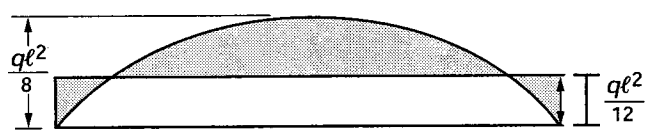

(e) Bending moment diagram.

Figure B.1.- Solution by superposition methods.

The moment is integrated to obtain the displacement function w by using the moment curvature relation as

$$\frac{d^2 w_1}{dx^2} = \frac{\mathcal{M}_1}{EI} = \frac{1}{EI}\left(\frac{q\ell x}{2} - \frac{qx^2}{2}\right) \tag{B.4}$$

Upon integration, the displacement function is obtained:

$$w_1 = \frac{1}{EI}\left(\frac{q\ell x^3}{12} - \frac{qx^4}{24} + c_1 x + c_2\right) \tag{B.5}$$

The two constants of integration (c_1, c_2) are calculated from the boundary conditions (see fig. B.1(c)) as

$$w_1 = 0 \quad \text{at} \quad x = 0 \quad \text{or} \quad c_2 = 0 \tag{B.6a}$$

$$w_1 = 0 \quad \text{at} \quad x = \ell \quad \text{or} \quad c_1 = -\frac{q\ell^3}{24} \tag{B.6b}$$

and the displacement function has the following form:

$$w_1 = \left(\frac{q}{24EI}\right)(x)\left(2\ell x^2 - x^3 - \ell^3\right) \tag{B.7}$$

The slope or rotation at A can be obtained as

$$\theta_1 = \left.\frac{dw}{dx}\right|_{x=0} = -\frac{q\ell^3}{24EI} \tag{B.8}$$

Solution to second determinate subproblem.—Likewise, the second subproblem depicted in figure B.1(d) is solved by calculation of the bending moment at a location x:

$$\mathcal{M}_2(x) = M_r \tag{B.9}$$

The integration of the moment curvature relation yields the displacement function w as

$$\frac{d^2 w_2}{dx^2} = \frac{\mathcal{M}_2}{EI} = \frac{M_r}{EI} \tag{B.10a}$$

$$w_2 = \frac{M_r\, x^2}{2EI} + d_1\, x + d_2 \tag{B.10b}$$

The two constants of integration (d_1, d_2) are calculated from the boundary conditions (see fig. B.1(d)):

$$w_2 = 0 \quad \text{at} \quad x = 0 \quad \text{or} \quad d_2 = 0$$

$$w_2 = 0 \quad \text{at} \quad x = \ell \quad \text{or} \quad d_1 = -\frac{M_r \ell}{2EI} \tag{B.11}$$

The displacement function has the following form:

$$w_2 = \frac{M_r}{2EI}\left(x^2 - \ell x\right) \tag{B.12}$$

The slope or rotation at A can be obtained as

$$\theta_2 = \left.\frac{dw}{dx}\right|_{x=0} = -\frac{M_r \ell}{2EI} \tag{B.13}$$

Step 2—Superposition of determinate solutions: The bending moment M_r is the only unknown of the beam, as shown under subproblem 2 in figure B.1(d). The superposition principle adjusts the bending moment M_r for subproblem 2 until the induced rotation θ_2 matches the rotation θ_1 in subproblem 1, producing the fixed-end condition with no rotation ($\theta = 0$) for the original problem. The superposition principle can be written mathematically as

$$\theta_1 + \theta_2 = \theta = 0$$

or

$$-\frac{q\ell^3}{24EI} - \frac{M_r \ell}{2EI} = 0$$

$$M_r = -\frac{q\ell^2}{12} = M \tag{B.14}$$

The moment M obtained here is identical to the IFM solution given by eq. (3.6.15). Likewise, the reaction R given by eq. (B.1) agrees with the shear force given by eq. (3.6.15). The bending moment diagram for the problem, which is obtained by superposing the two subproblem solutions, is shown in figure B.1(e).

The displacement function for the problem is obtained by adding the two responses for the two subproblems:

$$w = w_1 + w_2 \qquad \text{for} \qquad M_r = -\frac{q\ell^2}{12}$$

$$w = \frac{q}{EI}\left(\frac{\ell x^3}{12} - \frac{\ell^2 x^2}{24} - \frac{x^4}{24}\right) \tag{B.15}$$

The displacement functions given by equations (B.15) and (3.6.19) for the IFM solution agree.

Solution Through the Redundant Technique

The problem is one-degree indeterminate because of symmetry (see fig. B.1(b) and eqs. (B.1 and B.2)), or it has a single redundant force as the unknown ($r = 1$). In the redundant technique, a determinate basis structure is generated from the original structure by introducing as many virtual "cuts" as there are redundants. For a structure with a single redundant, one cut is introduced at the center span to obtain the basis structure, as shown in figure B.2(a). Normally, there should be a moment and a shear force at the cuts of the beam. From symmetry, the shear force is zero and the cut has only a moment M, which is considered to be the unknown redundant moment. The redundant solution method has two principal steps: (1) determination of the redundants, then (2) solution of the basis structure subjected to the external loads and the redundants.

Step 1—Determine the redundant moment: To determine the redundant moment M, one needs to solve the basis determinate structure twice—once for the external load, as shown in figure B.2(a), and again for the redundant moment M, shown in figure B.2(b). The two solutions are added to restore the original continuity condition at the cut. For this problem, because of symmetry, the continuity condition becomes zero ($\theta = 0$) at the beam center.

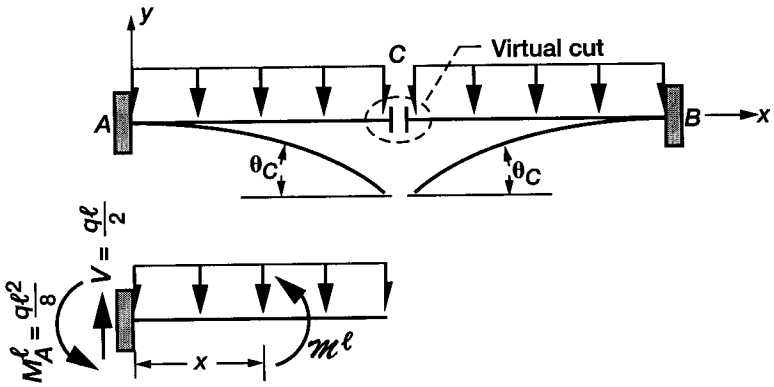

(a) Basis determinant structure with a cut at the center.

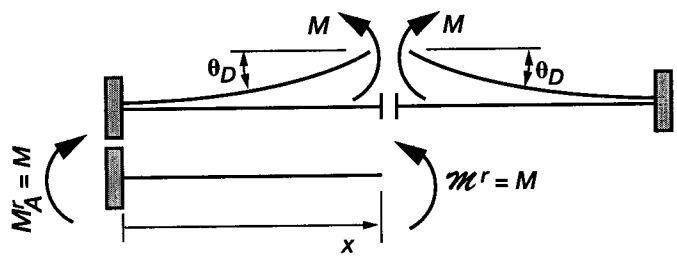

(b) Basis structure subjected to redundant moment M.

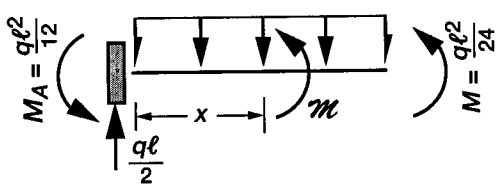

(c) Determinate structure subjected to external load q and redundant moment M.

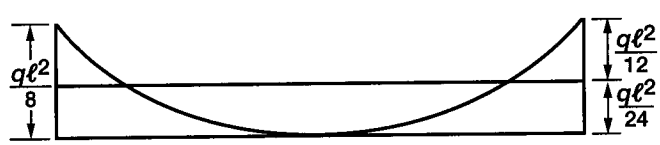

(d) Bending moment diagram.

Figure B.2.—Solution by the redundant force method.

This conditioni s enforced as(see figs. B.2(a) and B.2(b))

$$\theta_C + \theta_D = \theta = 0 \tag{B.16}$$

where θ_C is the rotation for the external loads (fig. B.2(a)), θ_D is the rotation due to the redundant moment M (fig. B.2(b)), θ is the rotation at the center of the real structure ($\theta = 0$).

Calculation of rotation θ_C: Determination of the rotation θ_C requires the integration of the moment curvature relation. The moment $\mathcal{M}^{\ell}(x)$ from figure B.2(a) can be calculateda s

$$\mathcal{M}^{\ell} = \frac{q\ell}{2}x - \frac{q\ell^2}{8} - \frac{qx^2}{2}$$

$$\frac{d^2w}{dx^2} = \frac{\mathcal{M}^{\ell}}{EI} = \frac{q}{2EI}\left(\ell x - \frac{\ell^2}{4} - x^2\right)$$

$$w = \frac{q}{2EI}\left(\frac{\ell x^3}{6} - \frac{\ell^2 x^2}{8} - \frac{x^4}{12} + c_1 x + c_2\right) \tag{B.17}$$

The integration constants are determined from the boundary condition at the origin:

$$w = 0 \quad at \quad x = 0 \quad or \quad c_2 = 0$$

$$\frac{dw}{dx} = 0 \quad at \quad x = 0 \quad or \quad c_1 = 0$$

$$w = \frac{q}{2EI}\left(\frac{\ell x^3}{6} - \frac{\ell^2 x^2}{8} - \frac{x^4}{12}\right) \tag{B.18}$$

The rotation at cut C is obtained as

$$\theta_C = \frac{dw}{dx} \quad \text{at} \quad x = \frac{\ell}{2}$$

$$\theta_C = -\frac{q\ell^3}{48EI} \tag{B.19}$$

Calculation of rotation θ_D: Determination of the rotation θ_D requires the integration of the moment curvature relation, which from figure B.2(b) can be written as

$$\frac{d^2w}{dx^2} = \frac{\mathcal{M}^r}{EI} = \frac{M}{EI}$$

$$w = \frac{Mx^2}{2EI} + c_1 x + c_2 \tag{B.20}$$

The integration constants are determined from the boundary condition at the origin:

$$w = 0 \quad \text{at} \quad x = 0 \quad \text{or} \quad c_2 = 0$$

$$\frac{dw}{dx} = 0 \quad \text{at} \quad x = 0 \quad \text{or} \quad c_1 = 0 \tag{B.21}$$

$$w = \frac{Mx^2}{2EI}$$

and the rotation at cut C is obtained as

$$\theta_D = \frac{M\ell}{2EI} \tag{B.22}$$

The slope continuity condition ($\theta_C + \theta_D = 0$) yields

$$-\frac{q\ell^3}{48EI} + \frac{M\ell}{2EI} = 0$$

$$M = \frac{q\ell^2}{24} \tag{B.23}$$

Step 2—Solution of the basis structure: The solution of the basis structure subjected to the external load q and the redundant moment M yields the solution to the original problem. Because of symmetry, only half of the basis structure is considered, as shown in figure B.2(c).

The moment is obtained by adding $\mathcal{M}^\ell$ and $\mathcal{M}^r$ (see fig. B.2(c)) as

$$\mathcal{M}^\ell + \mathcal{M}^r = -\frac{q\ell^2}{12} + \frac{q\ell x}{2} - \frac{qx^2}{2} \tag{B.24}$$

The moment diagram for the beam obtained from the determinate structure shown in figure B.2(c) is depicted in figure B.2(d). Careful examination will confirm that the moment diagrams given in figure B.1(e), which were obtained from the superposition solution, and the diagrams given in figure B.2(d), which were obtained from the redundant solution, are equivalent.

Calculation of displacement: The displacement function can be determined by integrating the moment curvature relationship (see fig. B.2(d)) as

$$\frac{d^2w}{dx^2} = \frac{\mathcal{M}}{EI} = \frac{1}{EI}\left(-\frac{q\ell^2}{12} + \frac{q\ell x}{2} - \frac{qx^2}{2}\right)$$

or

$$w = \frac{q}{EI}\left(-\frac{\ell^2 x^2}{24} + \frac{\ell x^3}{12} - \frac{x^4}{24} + c_1 x + c_2\right) \tag{B.25}$$

The boundary conditions ($w = 0$ and $dw/dx = 0$) at A ($x = 0$) yield the value of the constants ($c_1 = c_2 = 0$). The displacement function becomes

$$w = \frac{q}{EI}\left(-\frac{\ell^2 x^2}{24} + \frac{\ell x^3}{12} - \frac{x^4}{24}\right) \tag{B.26}$$

Both the superposition solution and the redundant solution solved this simple problem. Extension of the methods for the general solution of problems becomes cumbersome, especially when computers are used. Both methods are difficult to use in the dynamic analysis of structures. Even though the methods were favored during the manual calculation era, they are currently out of favor.

Appendix C
Standard Strength of Materials Formulas

Elementary structural analysis typically provides the solution for axial force, shear force, bending moment, and torque. The stress and strain induced in a beam because of these forces can be calculated through the use of standard strength of materials formulas. These formulas, which are derived in standard strength of materials textbooks, are summarized here.

Axial Force

The stress σ due to a force F in a uniform bar with cross-sectional area A can be determined as

$$\sigma = \frac{F}{A} \tag{C.1}$$

The strain ε due to the stress σ can be calculated from Hooke's law of the material and the Young's modulus of elasticity E as

$$\varepsilon = \frac{\sigma}{E} \tag{C.2}$$

For an axial member we can write

$$\sigma = E\varepsilon = \frac{F}{A} \tag{C.3}$$

The stress and strain distribution for a uniform bar of depth d, thickness b, and area A ($A = b\,d$) is illustrated in figure C.1.

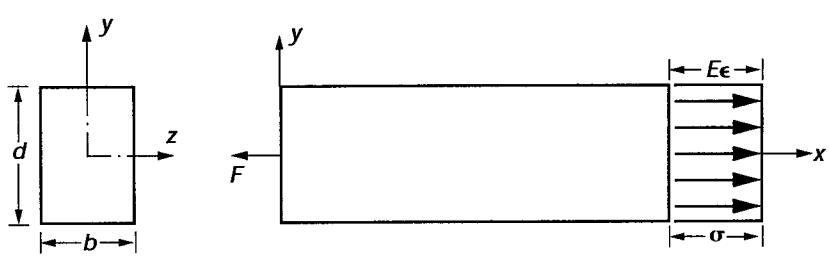

(a) Cross section (b) Stress distribution.

Figure C.1.- Stress and strain due to axial force.

Shear Force

The shear stress τ in a uniform beam due to a shear force V can be determined as

$$\tau = \frac{VQ}{It} \qquad \tau_{max} = 1.5\frac{V}{A} \tag{C.4}$$

where

A area
b thickness of the beam
I moment of inertia
Q first moment of the area with respect to the neutral axis

In the shear stress formula given by equation (C.4), the shear stress has a parabolic distribution along the depth about the neutral axis (or the x-axis in fig. C.2) because the first moment of the area is a function of the y-axis. The shear stress has the maximum value $\tau_{max} = 1.5\ (V/A)$ at the neutral axis.

The shear strain γ due to the shear stress τ can be calculated from Hooke's law of the material and the shear modulus G, where $G = E/[2(1+\nu)]$, as

$$\gamma = \frac{\tau}{G} \tag{C.5}$$

The shear stress and shear strain distribution for a rectangular uniform bar of depth d, thickness b, and area A, where $A = bd$, is illustrated in figure C.2.

Bending Moment

The bending stress σ in a uniform beam that is oriented along the x-axis has a linear distribution along the y-axis, as shown in figure C.3. The bending stress at the distance $\bar{y}$ from the neutral axis can be calculated from the following formula:

$$\sigma = \frac{M\bar{y}}{I} \qquad \varepsilon = \frac{\sigma}{E} \tag{C.6}$$

where σ is the stress along the beam depth at a location $\bar{y}$ from the neutral axis and ε is the strain associated with the stress σ.

The bending stress is zero at the neutral (or x) axis, and it peaks at the extreme fibers of the beam as shown in figure C.3.

Torque

The shear stress τ in a uniform shaft that is oriented along the x-axis has a linear distribution along the y-axis, as shown in figure C.4. The shear stress τ and strain γ at the distance $\bar{r}$ from the neutral axis can be calculated from the following formula:

$$\tau = \frac{T\bar{r}}{J} \qquad \gamma = \frac{\tau}{G} \tag{C.7}$$

where J ($J = 0.5\ \pi R^4$) is the polar moment of inertia of the circular cross section with radius R, and $\bar{r}$ is the distance from the neutral axis, as shown in figure C.4.

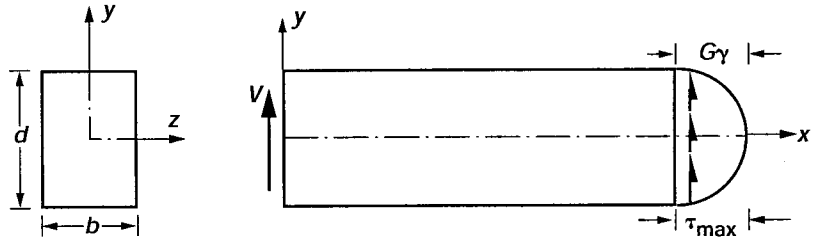

(a) Cross section (b) Stress distribution.

Figure C.2.- Shear stress and shear strain due to shear force.

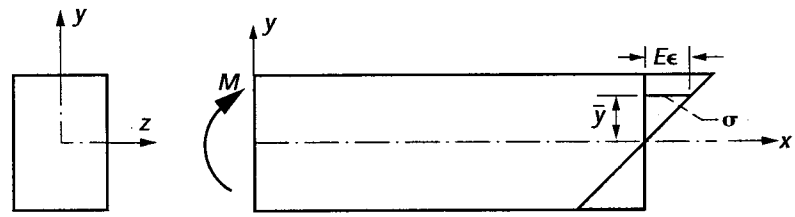

Cross section

Figure C.3.- Shear distribution due to bending moment.

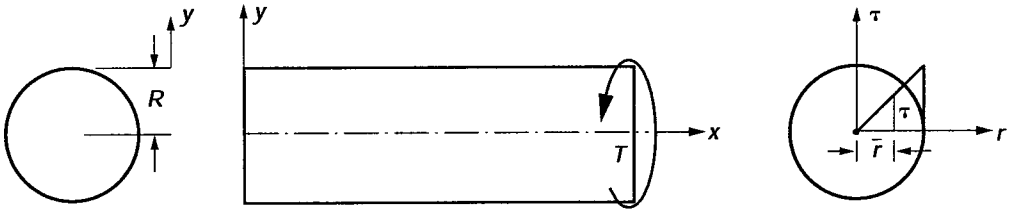

Cross section Torque T Shear stress

Figure C.4.- Shear stress distribution due to torque.

Appendix D
Sign Conventions

Sign Conventions for Variables

Uniform sign conventions are useful in solving structural analysis problems. This appendix summarizes the sign conventions that are followed in this report. However, one can analyze these problems without following the sign conventions given in this appendix. Consistent sign conventions are sufficient for the solution of structural mechanics problems.

The sign conventions are illustrated for common structural mechanics force and displacement variables—such as the normal force F, shear force V, bending moment M, and torque T—and the associated displacements—the axial displacement u, transverse displacement v, angle of flexural rotation θ, and angle of twist φ. A Cartesian coordinate system with the origin 0 and with x, y, and z as the axes (as depicted in fig. D.1(a)) is used to define the sign conventions.

Axial force, also referred to as the normal force F is considered to be positive along the positive direction. For a beam oriented along the x-axis, the axial force F is positive when it is directed along the positive x-axis, as shown in figure D.1(a). The axial displacement u is considered to be positive along the positive x-direction. In other words, both the axial force and the axial displacements are positive along the positive x-axis.

Likewise, the shear force V and transverse displacement v are considered to be positive along the positive direction. For a beam oriented along the x-axis, the shear force and transverse displacements are positive along the positive y-axis, as shown in figure D.1(b).

The bending moment and torque, along with the associated displacements (θ, φ) are considered to be positive along their vectorial directions. For a beam oriented along the x-axis, the moment M is positive when the moment vector is directed along the positive z-axis, as shown in figure D.1(c). The rotation θ, which follows the sign convention for the moment M, is positive when the rotational vector is directed along the z-axis.

For a beam oriented along the x-axis, the torque T is positive when the torque vector is directed along the positive x-axis, as shown in figure D.1(d). The angle of twist φ, which follows the sign convention for the torque T, is positive when the angle of twist vector is directed along the x-axis.

In the solution of problems utilizing conditions of symmetry, it can be advantageous to select the beam (or $\bar{x}$) axis directed from right to left, as shown in figure D.1(e). The other two axes ($\bar{y}$, $\bar{z}$) are selected according to Cartesian conventions, as depicted in figure D.1(e). After the $\bar{x}$-, and $\bar{z}$-axes are defined, the positive directions for forces and displacements follow the earlier conventions.

For example, for a beam oriented along the positive $\bar{x}$-axis, the moment M is considered to be positive when the vector is directed along the $\bar{z}$-axis. On the beam, the moment takes a clockwise direction (see fig. D.1(e)), which is opposite to that shown in figure D.1(c). Likewise, the sign for torque is shown in figure D.1(f). Readers can avoid confusion by following consistent conventions—that is, by considering a force (or a displacement) variable to be positive when it is directed along the positive axis, and by remembering the vectorial directions for moment and torque.

Typically, structural problems deal with gravity load (P_y), which is directed along the negative y-axis. However, displacement (X_y) is considered to be positive along the y-axis. The convention results in a negative work term, $W = -P_y X_y$.

Traditionally, in the solution of elementary structural mechanics problems, a free-body diagram with specified signs for forces, moments, and torque is employed. Upon solution, the positive value for the force variable confirms the specified sign, whereas the negative value requires the opposite of the assumed sign. Displacements, rotations, and angles of twist follow the sign convention for force, moment, and torque, respectively.

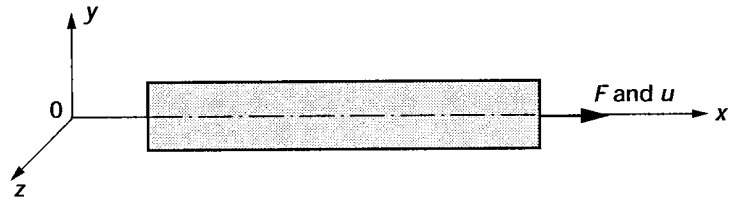

(a) Axial force (F) is positive when directed along the positive x-axis.

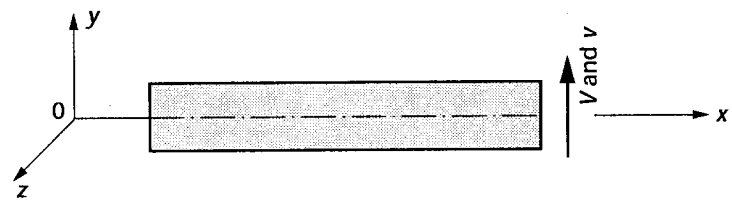

(b) Shear force (V) is positive when directed along the positive y-axis.

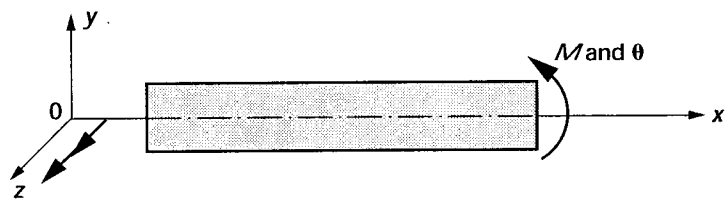

(c) Bending moment (M) is positive when directed along the positive z-axis.

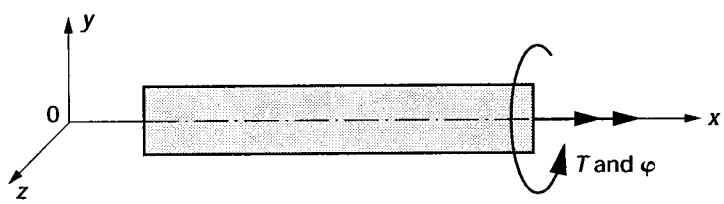

(d) Torsional moment (T) is positive when directed along the positive x-axis.

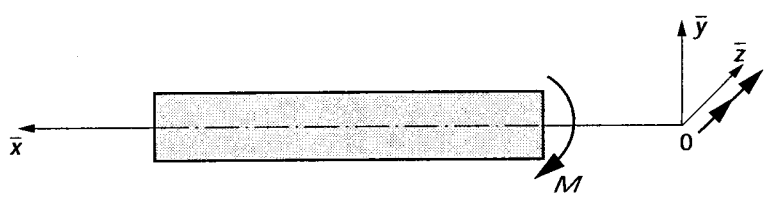

(e) Moment (M) is positive when directed along the positive $\bar{z}$-axis.

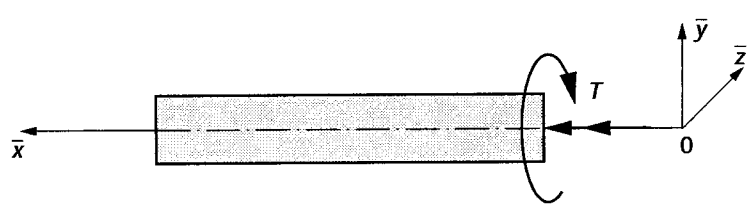

(f) Torsional moment (T) is positive when directed along the positive $\bar{x}$-axis.

Figure D.1.- Sign conventions for force, moment, and torque.

Sign Conventions for Equilibrium Equations

In the equilibrium equations ($[B]\{F\} = \{P\}$), aligning the load vector $\{P\}$ along the positive axes will produce the displacement vector $\{X\}$ along the positive axes. As an illustration of the sign convention for the equilibrium equations, consider a beam with a load P at the center span as shown in figure D.2(a). The transverse EE along the positive y-direction can be written as

$$-R_A - R_B = -P$$

Likewise, the moment EE at A along the positive z-axis can be written as

$$-R_B \ell = -\frac{P\ell}{2}$$

In matrix notation, the two EE can be written as

$$\begin{bmatrix} -1 & -1 \\ 0 & -\ell \end{bmatrix} \begin{Bmatrix} R_A \\ R_B \end{Bmatrix} = \begin{Bmatrix} -P \\ \dfrac{-P\ell}{2} \end{Bmatrix} \tag{D.1}$$

In the EE given by equation D.1, the load component ($-P$) is along the positive y-axis and the moment vector ($-P\ell/2$) is directed along the positive z-axis. If there is confusion in the sign convention for the equilibrium equations, the

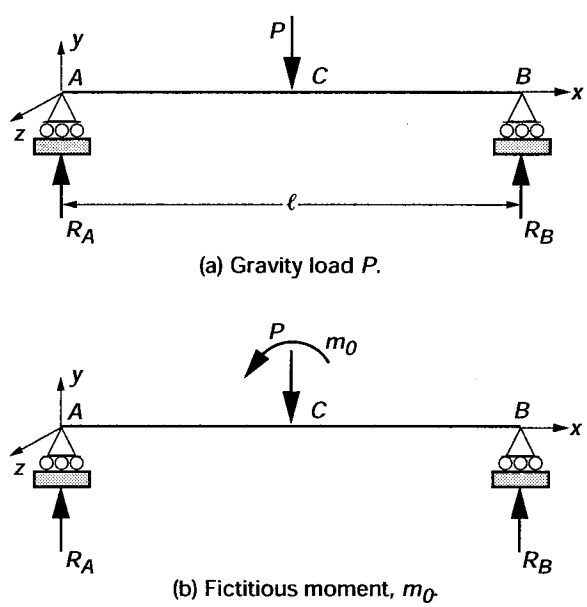

Figure D.2.- Sign conventions for equilibrium equations.

following technique can be used. Apply a fictitious force or moment along the positive axis. For example, for moment EE, a fictitious moment m_0 should be applied as shown in figure 3.2(b). The moment EE at A can be written as

$$-R_B\ell = m_0 - \frac{P\ell}{2}$$

Then, set the fictitious moment to zero ($m_0 = 0$) to obtain the EE written in the positive direction as

$$-R_B\ell = -\frac{P\ell}{2}$$

This technique also can be used to write other equilibrium equations.

Appendix E
Important Symbols

The following symbols are used in this report.

A	cross-sectional area
$[B]$	equilibrium matrix
$[B_{\mathcal{R}}]$	equilibrium matrix to back-calculate reactions
$[C]$	compatibility matrix
$[D]$	dual matrix of IFMD
dof	displacement degrees of freedom
E	Young's modulus
F	axial, or normal, force
fof	force degrees of freedom
$[G]$	symmetrical flexibility matrix
g	flexibility coefficient
$H_{01}(x)$	Hermite polynomials
h	plate thickness
I, J	moment and polar moment of inertia
IE	internal energy
$[J]$	deformation coefficient matrix
$[K]$	stiffness matrix
ℓ	length parameter
M	moment
$\mathcal{M}$	moment function as $\mathcal{M}(x)$
M_x, M_y, M_{xy}	plate-bending moments
m	number of displacement variables or equilibrium equations
n	number of force variables
P	external load
q	load intensity
R	reaction

r	degree of indeterminacy
$[S]$	IFM governing matrix
T	torque; as a superscript represents transpose operation
ΔT	temperature variation
U	strain energy
U_c	complementary energy
u, v, w	displacement components
V	shear force
W	work done by external loads
X	displacements
$\overline{X}$	amount of support settling
x, y, z	Cartesian coordinates
α	coefficient of thermal expansion
δR	effective initial deformation
ε	normal strain
γ	shear strain
φ	angle of twist
κ	curvature
θ	rotation
σ	normal stress
τ	shear stress

Acronyms and Initialisms

CC	compatibility condition
DDR	deformation displacement relation
EE	equilibrium equation
FDR	force deformation relation
IFM	Integrated Force Method
IFMD	Dual Integrated force Method

References

Historical Background

1. Galilei, G.: Dialogues Concerning Two New Sciences. Northwestern University Press, Evanston, Illinois, 1950.
2. Timoshenko, S.: Strength of Materials. D. Van Nostrand Company, Inc., New York, 1930.
3. Love, A.E.H.: A Treatise on the Mathematical Theory of Elasticity. Cambridge University Press, Cambridge (England), 1927.
4. Todhunter, I.: A History of the Theory of Elasticity and of the Strength of Materials, From Galilei to the Present Time. Cambridge University Press, Cambridge (England), 1886–1893.

Integrated Force Method—Basic Theory

5. Patnaik, S.N.; and Hopkins, D.A.: Recent Advances in the Method of Forces: Integrated Force Method of Structural Analysis. Advances Engrg. Software, vol. 29, no. 3–6, 1998, pp. 463–474.
6. Patnaik, S.N.; Berke, L.; and Gallagher, R.H.: Compatibility Conditions of Structural Mechanics for Finite Element Analysis. AIAA J., (Also NASA TM–102413), vol. 29, May 1991, pp. 820–829.
7. Nagabhusanam, J.; and Patnaik, S.N.: General Purpose Program to Generate Compatibility Matrix in the Integrated Force Method. AIAA J., vol. 28, Oct. 1990, pp. 1838–1842.
8. Patnaik, S.N.: The Variational Energy Formulation for the Integrated Force Method. AIAA J., vol. 24, no. 2, 1986, pp. 129–137.
9. Patnaik, S.N.; and Joseph, K.T.: Generation of the Compatibility Matrix in the Integrated Force Method. Comp. Meth. Appl. Mech. Eng., vol. 55, no. 3, May 1986, pp. 239–257.
10. Patnaik, S.N.; and Joseph, K.T.: Compatibility Conditions From Deformation Displacement Relationship. AIAA J., vol. 23, Aug. 1985, pp. 1291–1293.

Integrated Force Method—Design Optimization

11. Patnaik, S.N.; Gendy, A.S.; Berke, L.; and Hopkins, D.A.: Modified Fully Utilized Design (MFUD) Method for Stress and Displacement Constraints. Int. J. Numer. Methods Engrg., vol. 41, 1998, pp. 1171–1194.
12. Patnaik, S.N.; Hopkins, D.A.; and Coroneos, R.: Structural Optimization With Approximate Sensitivities. Comput. Struct., vol. 58, no. 2, 1996, pp. 407–418 (NASA TM–4553).
13. Patnaik, S.N.: Analytical Initial Design for Structural Optimization via the Integrated Force Method. Comput. Struct., vol. 33, no. 1, 1989, pp. 265–268.
14. Patnaik, S.N.: Behaviour of Trusses With Stress and Displacement Constraints. Comput. Struct., vol. 22, no. 4, 1986, pp. 619–623.
15. Patnaik, S.N.; and Gallagher, R.H.: Gradients of Behaviour Constraints and Reanalysis via the Integrated Force Method. Int. J. Numer. Meth. Engrg., vol. 23, 1986, pp. 2205–2212.
16. Patnaik, S.N.; and Yadagiri, S.: Design for Frequency by the Integrated Force Method. Comput. Methods Appl. Mech. Engrg., vol. 16, no. 2, 1978, pp. 213–230.
17. Patnaik, S.N.; and Dayaratnam, P.: Behaviour and Design of Pin-Connected Structures. Int. J. Numer. Methods Engrg., vol. 2, 1970, pp. 579–595.
18. Dayaratnam, P.; and Patnaik, S.N.: Feasibility of Full Stress Design. AIAA J., vol. 7, 1969, pp. 773–774.

Integrated Force Method—Elasticity

19. Patnaik, S.N.; Kaljevic, I.; Hopkins, D.A., and Saigal, S.: Completed Beltrami-Michell Formulation for Analyzing Mixed Boundary Value Problems in Elasticity. AIAA J. (NASA TM–106809), vol. 34, no. 1, 1996, pp. 143–148.
20. Patnaik, S.N.; and Satish, H.G.: Analysis of Continuum Using the Boundary Compatibility Conditions of Integrated Force Method. Comput. Struct., vol. 34, no. 2, 1990, pp. 287–295.
21. Vijayakumar, K., Krishna Murty, A.V., and Patnaik, S.N.: A Basis for the Analysis of Solid Continua Using the Integrated Force Method. AIAA J., vol. 26, no. 15, 1988, pp. 628–629.
22. Patnaik, S.N.; and Nagaraj, M.S.: Analysis of Continuum by the Integrated Force Method. Comput. Struct., vol. 26, no. 6, 1987, pp. 899–905.

Integrated Force Method—Finite Element Analysis

23. Hopkins, D.A.; Kaljevic, I.; and Patnaik, S.N.: Constructing Finite Elements for the Integrated Force Method. NASA Tech Briefs, vol. 21, no. 7, 1997, pp. 70–72.
24. Kaljevic, I.; Patnaik, S.N.; and Hopkins, D.A.: Treatment of Initial Deformations in the Integrated Force Method. Comput. Meth. Appl. Mech. Eng., vol. 140, nos. 3–4, 1997, pp. 281–289.
25. Patnaik, S.N.; Coroneos, R.M.; and Hopkins, D.A.: Dynamic Animation of Stress Modes via the Integrated Force Method of Structural Analysis. Int. J. Num. Meth. Engrg. vol. 40, 1997, pp. 2151–2169.
26. Kaljevic, I.; Patnaik, S.N.; and Hopkins, D.A.: Development of Finite Elements for Two-Dimensional Structural Analysis Using the Integrated Force Method. Comput. Struct. (NASA TM–4655), vol. 59, no. 4, 1996, pp. 691–706.
27. Kaljevic, I.; Patnaik, S.N.; and Hopkins, D.A.: Three Dimensional Structural Analysis by the Integrated Force Method. Comput. Struct., vol. 58, no. 5, 1996, pp. 869–886.
28. Patnaik, S.N.; Hopkins, D.A.; Aiello, R.A., and Berke, L.: Improved Accuracy for Finite Element Structural Analysis via an Integrated Force Method. Comput. Struct., vol. 45, no. 3, 1992, pp. 521–542.
29. Patnaik, S.N.; Berke, L.; and Gallagher, R.H.: Integrated Force Method Versus Displacement Method for Finite Element Analysis. Comput. Struct. (Also NASA TP–2937), vol. 38, no. 4, 1991, pp. 377–407.
30. Patnaik, S.N.: Integrated Force Method Versus the Standard Force Method. Comput. Struct., vol. 22, no. 2, 1986, pp. 151–163.
31. Patnaik, S.N.; and Yadagiri, S.: Frequency Analysis of Structures by Integrated Force Method. J. Sound Vibr., vol. 83, 1982, pp. 93–109.
32. Patnaik, S.N.: An Integrated Force Method for Discrete Analysis. Int. J. Numer. Meth. Engrg., vol. 6, no. 2, 1973, pp. 237–251.

Other References

33. Zienkiewicz, O.C.: The Finite Element Method. McGraw-Hill, New Delhi, 1979.
34. Gallagher, R.H. : Finite Element Analysis: Fundamentals. Prentice-Hall, Englewood Cliffs, New Jersey, 1975.
35. Bathe—I need more information to locate this reference???
36. Przemieniecki, J.S.: Theory of Matrix Structural Analysis. McGraw-Hill, New York, 1968.
37. McGuire, W.; and Gallagher, R.H.: Matrix Structural Analysis. Wiley, New York, 1979.
38. Sokolnikoff, I.S.: Mathematical Theory of Elasticity. McGraw-Hill, New York, 1956.
39. Robinson, J.: Integrated Theory of Finite Element Methods. Wiley, New York, 1973.
40. Tapsu, A.: A Contribution to the Systematic Analysis of Finite Element Structures Using the Force Method. Doctoral dissertation, University of Essen, West Germany, 1979.

REPORT DOCUMENTATION PAGE

Form Approved
OMB No. 0704-0188

Public reporting burden for this collection of information is estimated to average 1 hour per response, including the time for reviewing instructions, searching existing data sources, gathering and maintaining the data needed, and completing and reviewing the collection of information. Send comments regarding this burden estimate or any other aspect of this collection of information, including suggestions for reducing this burden, to Washington Headquarters Services, Directorate for Information Operations and Reports, 1215 Jefferson Davis Highway, Suite 1204, Arlington, VA 22202-4302, and to the Office of Management and Budget, Paperwork Reduction Project (0704-0188), Washington, DC 20503.

1. AGENCY USE ONLY (*Leave blank*)

2. REPORT DATE
March 2004

3. REPORT TYPE AND DATES COVERED
Technical Paper

4. TITLE AND SUBTITLE
Integrated Force Method Solution to Indeterminate Structural Mechanics Problems

5. FUNDING NUMBERS
WBS–22–708–24–05

6. AUTHOR(S)
Surya N. Patnaik, Dale A. Hopkins, and Gary R. Halford

7. PERFORMING ORGANIZATION NAME(S) AND ADDRESS(ES)
National Aeronautics and Space Administration
John H. Glenn Research Center at Lewis Field
Cleveland, Ohio 44135–3191

8. PERFORMING ORGANIZATION REPORT NUMBER
E–10681

9. SPONSORING/MONITORING AGENCY NAME(S) AND ADDRESS(ES)
National Aeronautics and Space Administration
Washington, DC 20546–0001

10. SPONSORING/MONITORING AGENCY REPORT NUMBER
NASA TP—2004-207430

11. SUPPLEMENTARY NOTES
Surya N. Patnaik, Ohio Aerospace Institute, Brook Park, Ohio and NASA Resident Research Associate at Glenn Research Center; and Dale A. Hopkins and Gary R. Halford, NASA Glenn Research Center. Responsible person, Surya N. Patnaik, organization code 5930, 216–433–5916.

12a. DISTRIBUTION/AVAILABILITY STATEMENT
Unclassified - Unlimited
Subject Category: 39 Distribution: Standard
Available electronically at http://gltrs.grc.nasa.gov
This publication is available from the NASA Center for AeroSpace Information, 301–621–0390.

12b. DISTRIBUTION CODE

13. ABSTRACT ***(Maximum 200 words)***
Strength of materials problems have been classified into determinate and indeterminate problems. Determinate analysis primarily based on the equilibrium concept is well understood. Solutions of indeterminate problems required additional compatibility conditions, and its comprehension was not exclusive. A solution to indeterminate problem is generated by manipulating the equilibrium concept, either by rewriting in the displacement variables or through the ‘cutting and closing gap’ technique of the redundant force method. Compatibility improvisation has made analysis cumbersome. The authors have researched and understood the compatibility theory. Solutions can be generated with equal emphasis on the equilibrium and compatibility concepts. This technique is called the Integrated Force Method (IFM). Forces are the primary unknowns of IFM. Displacements are back-calculated from forces. IFM equations are manipulated to obtain the Dual Integrated Force Method (IFMD). Displacement is the primary variable of IFMD and force is back-calculated. The subject is introduced through response variables: force, deformation, displacement; and underlying concepts: equilibrium equation, force deformation relation, deformation displacement relation, and compatibility condition. Mechanical load, temperature variation, and support settling are equally emphasized. The basic theory is discussed. A set of examples illustrate the new concepts. IFM and IFMD based finite element methods are introduced for simple problems.

14. SUBJECT TERMS
Equilibrium equation; Compatibility condition; Deformation displacement relation; Force deformation relation; Integrated Force Method; Dual Integrated Force Method; Truss; Beam; Shaft; Frame; Membrane structure

15. NUMBER OF PAGES
180

16. PRICE CODE

17. SECURITY CLASSIFICATION OF REPORT	18. SECURITY CLASSIFICATION OF THIS PAGE	19. SECURITY CLASSIFICATION OF ABSTRACT	20. LIMITATION OF ABSTRACT
Unclassified	Unclassified	Unclassified	