NASA/CR—2004-213096

Contingency Power Study for Short Haul Civil Tiltrotor

Martin M. D'Angelo
GE Aircraft Engines, Lynn, Massachusetts

May 2004

The NASA STI Program Office . . . in Profile

Since its founding, NASA has been dedicated to the advancement of aeronautics and space science. The NASA Scientific and Technical Information (STI) Program Office plays a key part in helping NASA maintain this important role.

The NASA STI Program Office is operated by Langley Research Center, the Lead Center for NASA's scientific and technical information. The NASA STI Program Office provides access to the NASA STI Database, the largest collection of aeronautical and space science STI in the world. The Program Office is also NASA's institutional mechanism for disseminating the results of its research and development activities. These results are published by NASA in the NASA STI Report Series, which includes the following report types:

- TECHNICAL PUBLICATION. Reports of completed research or a major significant phase of research that present the results of NASA programs and include extensive data or theoretical analysis. Includes compilations of significant scientific and technical data and information deemed to be of continuing reference value. NASA's counterpart of peer-reviewed formal professional papers but has less stringent limitations on manuscript length and extent of graphic presentations.

- TECHNICAL MEMORANDUM. Scientific and technical findings that are preliminary or of specialized interest, e.g., quick release reports, working papers, and bibliographies that contain minimal annotation. Does not contain extensive analysis.

- CONTRACTOR REPORT. Scientific and technical findings by NASA-sponsored contractors and grantees.

- CONFERENCE PUBLICATION. Collected papers from scientific and technical conferences, symposia, seminars, or other meetings sponsored or cosponsored by NASA.

- SPECIAL PUBLICATION. Scientific, technical, or historical information from NASA programs, projects, and missions, often concerned with subjects having substantial public interest.

- TECHNICAL TRANSLATION. English-language translations of foreign scientific and technical material pertinent to NASA's mission.

Specialized services that complement the STI Program Office's diverse offerings include creating custom thesauri, building customized databases, organizing and publishing research results . . . even providing videos.

For more information about the NASA STI Program Office, see the following:

- Access the NASA STI Program Home Page at ***http://www.sti.nasa.gov***

- E-mail your question via the Internet to help@sti.nasa.gov

- Fax your question to the NASA Access Help Desk at 301–621–0134

- Telephone the NASA Access Help Desk at 301–621–0390

- Write to:
  NASA Access Help Desk
  NASA Center for AeroSpace Information
  7121 Standard Drive
  Hanover, MD 21076

NASA/CR—2004-213096

Contingency Power Study for Short Haul Civil Tiltrotor

Martin M. D'Angelo
GE Aircraft Engines, Lynn, Massachusetts

Prepared under Contract NAS3–26617, Task Order 48

National Aeronautics and
Space Administration

Glenn Research Center

May 2004

Document History

This research was originally published internally as AST025 in November 1998.

Note that at the time of printing, the NASA Lewis Research Center was undergoing a name change to the NASA John H. Glenn Research Center at Lewis Field. Both names appear in these proceedings.

Trade names or manufacturers' names are used in this report for identification only. This usage does not constitute an official endorsement, either expressed or implied, by the National Aeronautics and Space Administration.

Available from

NASA Center for Aerospace Information
7121 Standard Drive
Hanover, MD 21076

National Technical Information Service
5285 Port Royal Road
Springfield, VA 22100

Available electronically at http://gltrs.grc.nasa.gov

Table Of Contents

Section	Page No.
Summary	1
Background	1
Need For Contingency Power Enhancement	1
Contingency Power Study: Objective and Methodology	2
Baseline Aircraft, Propulsion Requirements And DOC Model	2
Baseline Engine Definition	7
Concept Screening Study	10
Concept Descriptions	10
Concept Screening	21
Selected Engine Concepts	23
Definition and Evaluation Of Selected Concepts	24
Lifing Methodology	29
Baseline Engine - Detailed Definition	32
Cooled Power Turbine Throttle Push Engine Concept - Detailed Definition	35
Modulated Turbine Cooling Engine Concept - Detailed Definition	35
Water Injected Turbine Cooling Engine Concept - Detailed Definition	36
Life Consumption During an Emergency Event	37
Economic And Safety Evaluation	38
Other Applications Of Selected Technologies	40
Conclusions	40
Critical Technologies And Development Needs	40

List of Figures

Figure Number		Page No.
1	Aircraft Sizing Mission For Short Haul Civil Tiltrotor	3
2	Three-view of NASA Baseline Aircraft in Helicopter Mode	4
3	Three-view of NASA Baseline In Airplane Mode	4
4	Baseline Engine Concept	8
5	Baseline Engine Concept (Turbine Cooling)	25
6	Cooled Power Turbine Throttle Push Engine Concept	26
7	Modulated Turbine Cooling Engine Concept	27
8	Water Injected Turbine Cooling Engine Concept	28
9	Modulated Turbine Cooling HPT Double Accelerator	35

List of Tables

Table		Page No.
1	Baseline Civil Tiltrotor Aircraft Models	5
2	Contingency vs. Normal Operation Power Requirements	6
3	Aircraft DOC Sensitivities to Engine Parameters	6
4	Baseline Engine Cycle at Critical Operating Conditions	9
5	Screening Study Concept Ranking	21
6	Engine Component Sizing Criteria	29
7	Baseline Engine - HPT Blade Mission Life Consumption	31
8	Baseline Configuration - Airfoil Materials and Cooling	32
9	Baseline OEI And Mission Life Margin	33
10	Selected Engine Concept Disk Materials	33
11	Airfoil Materials And Cooling For Selected Engine Concepts	34
12	Selected Engine Concepts Life Summary	34
13	Summary Of Cooling Flow Modulation	36
14	Water Consumed During OEI Event	37
15	Equivalent Mission Life Consumed During OEI Event	38
16	Economic Evaluation of Selected Engine Concepts vs. Baseline	39

SUMMARY

NASA has concluded from previous studies that the twin engine tiltrotor is the most economical and technologically viable rotorcraft for near-term civil applications. Twin engine civil rotorcraft must be able to hover safely on one engine in an emergency. This emergency power requirement generally results in engines 20% to 50% larger than needed for normal engine operation, negatively impacting aircraft economics.

This study identifies several contingency power enhancement concepts, and quantifies their potential to reduce aircraft operating costs. Many unique concepts were examined, and the selected concepts are simple, reliable, and have a high potential for near term realization. These engine concepts allow extremely high turbine temperatures during emergency operation by providing cooling to the power turbine and augmenting cooling of both turbines and structural hardware. Direct operating cost are reduced 3% to 4%, which could yield a 30% to 80% increase in operating profits.

The study consists of the definition of an aircraft economics model and a baseline engine, and an engine concept screening study, and a preliminary definition of the selected concepts. The selected concepts are evaluated against the baseline engine, and the critical technologies and development needs are identified, along with other applications for this technology.

BACKGROUND

Over the past several years, NASA has sponsored a series of studies to identify the technologies and development needs critical to near-term high speed rotorcraft (HSRC). GEAE has been participating in NASA-Lewis studies, defining propulsion systems to support the NASA-Ames rotorcraft studies, and determining the engine technologies critical to these aircraft. The four Ames sponsored aircraft companies (Bell Helicopters, Boeing Helicopters, McDonnell Douglas Helicopters, and Sikorsky Aircraft) studied a wide range of HSRC concepts, including tilt rotor (fixed and variable diameter), folding tilt rotor, tilt wing, locking rotor, and fan-in-wing. GEAE defined propulsion system concepts for each of these rotorcraft types, and estimated performance, assessed risk, and defined development needs for the selected engine concepts. As a result of these studies, NASA has concluded that tilting rotor aircraft are the most economical and technologically viable rotorcraft for near-term civil applications. NASA established the Short Haul Civil Tiltrotor (SHCT) program to develop the critical technologies needed to overcome inhibitors to the successful introduction of civil tilting rotor aircraft. The most critical propulsion need identified for this type of aircraft is the development of safe and low cost contingency power enhancement technologies. NASA established a contingency power development program to address this need. This concept trade study is the first element of NASA's three phase contingency power development program.

NEED FOR CONTINGENCY POWER ENHANCEMENT

Civil tiltrotors need the ability to hover safely with one engine inoperative (OEI) under any foreseeable circumstance. In twin engine applications, this contingency power requirement can size the engines 20% to 50% larger than required for normal two engine operation. Sizing the engines for a rare emergency event has a strong impact on the economic viability of civil tiltrotors due to increased engine weight, cost, and fuel consumption. The contingency power

ratio (CPR) is a measure of the degree to which the hover, OEI power requirement sizes the engine. For the purposes of this study, NASA defined the CPR as the ratio of power required to hover on one engine divided by the normal (5 minute) takeoff rating of an engine sized by normal mission (all engines operating) power requirements.

CONTINGENCY POWER STUDY: OBJECTIVE AND METHODOLOGY

The objective of this study is to identify the most promising technologies for providing low cost and safe contingency power, and to assess their payoff for civil tiltrotor applications. Aircraft direct operating cost (DOC) is the main merit factor used to evaluate these contingency power enhancing concepts. The economic benefits of these unique engine concepts are evaluated against a conventional baseline engine of similar technology and core configuration.

An aircraft sizing and DOC model was established to determine engine performance requirements and for use in engine definition and evaluation. An engine that meets the aircraft propulsion requirements with a conventional configuration was defined as a baseline. Next, concepts with potential to enhance contingency power were identified and screened for feasibility, safety, and potential cost impact. The most promising ones were selected for further definition. Performance models and preliminary designs were established for the selected engine concepts. The selected engine concepts were evaluated against the baseline engine to determine improvements in aircraft operating costs. The impact of a field OEI event on engine life was assessed for the selected engine concepts and the baseline engine. Enabling technologies and development needs were identified for the most promising concepts. This report also cites other applications for this technology.

BASELINE AIRCRAFT, PROPULSION REQUIREMENTS, AND DOC MODEL

GEAE defined a baseline aircraft performance and sizing model to establish the engine power requirements, and an aircraft DOC model for evaluating engine concepts. NASA Ames also developed an aircraft model for these purposes, but it had not been completed in time for use in the early portion of this study. GEAE provided NASA Ames with assistance in modeling the propulsion system used in their aircraft model. Working together, GEAE and NASA were able to develop a significantly more accurate method of modeling engine performance in the aircraft modeling tool VASCOMP.

The development of two separate aircraft models proved beneficial to this program in two ways. First, GEAE and NASA Ames were able to utilize each other's aircraft models to check and to improve their own models. Second, the aircraft were sized to represent different levels of contingency power requirement. This enabled us to determine the impact of different contingency power requirements on technology selection.

The GEAE and NASA civil tiltrotor models were defined using the mission and payload developed by the SHCT Government/Industry Propulsion Working Group. Both aircraft have 8000 lb payloads representing a 40 passenger capacity. The aircraft were designed with 600 nmi range capability with reserves, and a cruise speed of 350 kts. (See Figure 1). The aircraft were defined to minimize DOC for a 200 nmi mission, which is a typical mission for short haul civil aircraft. Figures 2 and 3 are three view drawings of the NASA baseline civil tilt rotor in helicopter and airplane modes, respectively. Table 1 is an aircraft sizing and economics summary for both the NASA and GEAE baseline civil tiltrotors.

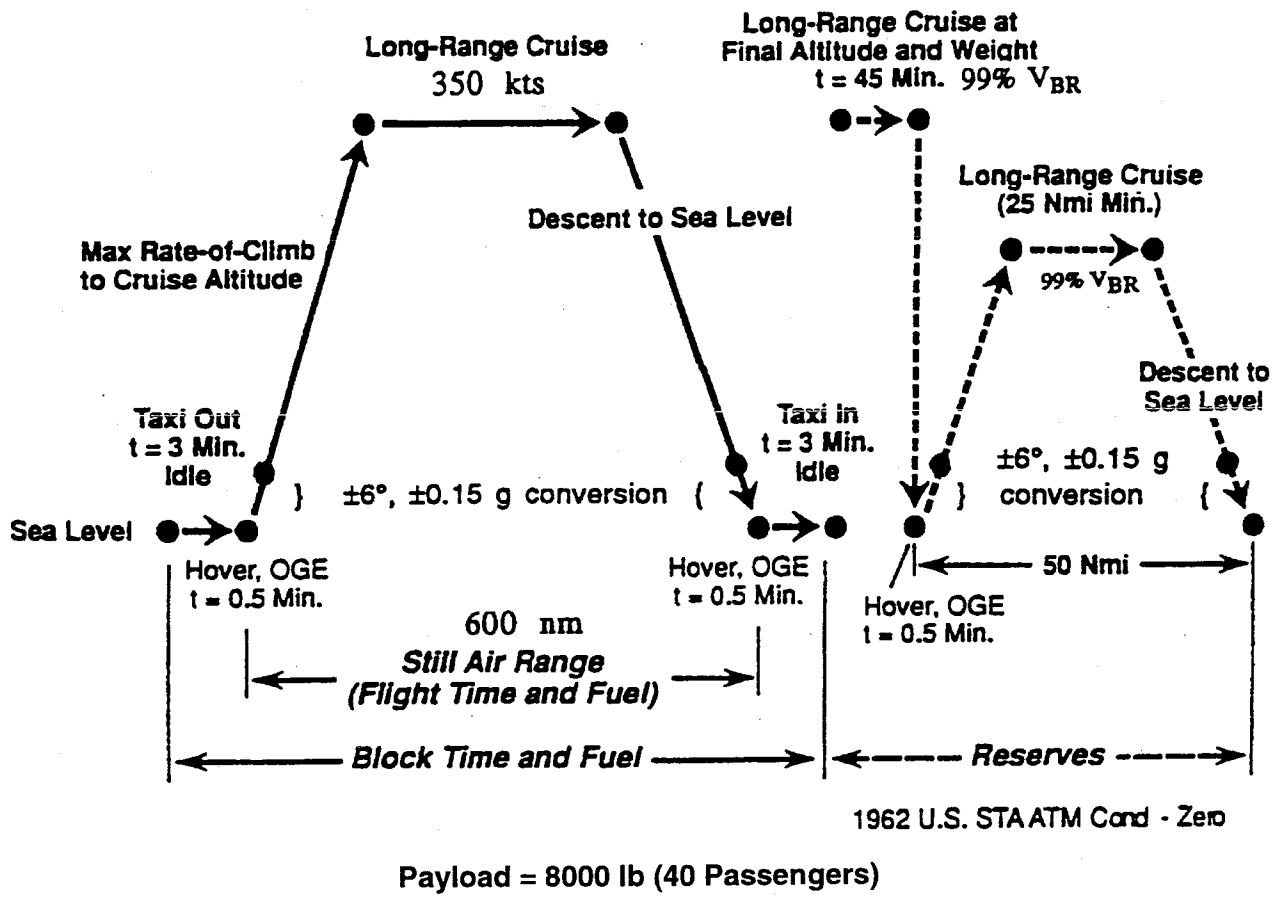

Payload = 8000 lb (40 Passengers)

Figure 1. 600 nmi Aircraft Sizing Mission For Short Haul Civil Tiltrotor.

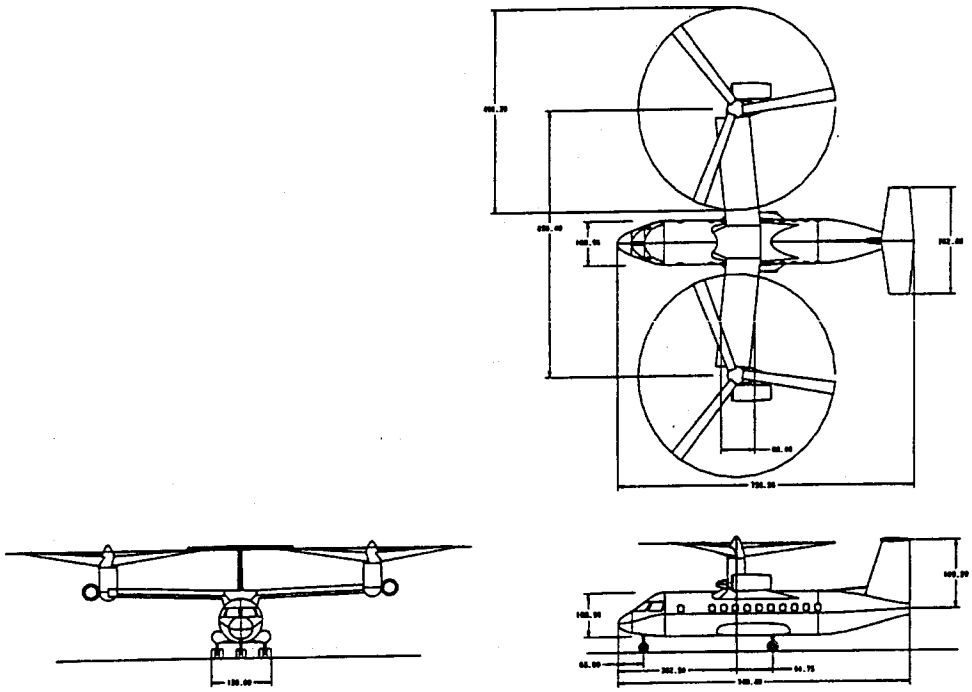

Figure 2. Three-view of the NASA SH(CT) Baseline in Helicopter Mode

Competitively Sensitive Technology

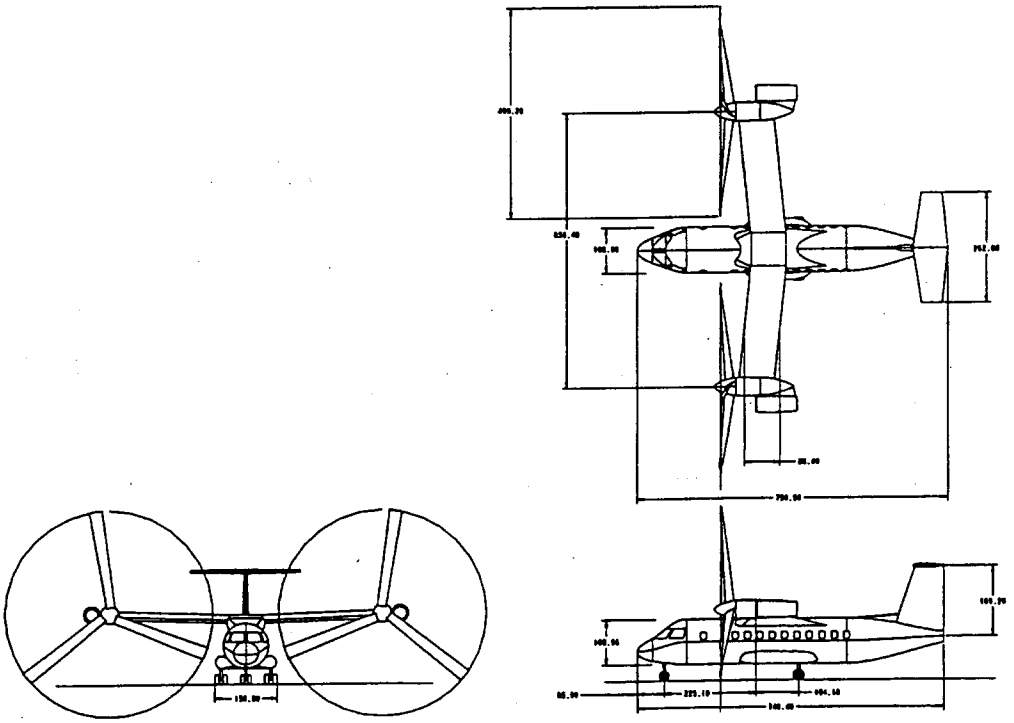

Figure 3. Three-view of the NASA SH(CT) Baseline in Airplane Mode

Table 1. Baseline Civil Tiltrotor Aircraft Models

Baseline Aircraft Weight, Geometry, & Economics		GEAE	NASA 4/95
Aircraft Sizing for 600 nmi Mission			
TOGW	lb	40800	46881
Disc Loading	lb/sq ft	25	19
Power Loading (2K/ISA+20C)	lb/rhp	5.695	6.54
Wing Loading	lb/sq ft	125	120
SHP Req'd for Hover (2K/ISA+20C)	shp	8446	8448
Cruise SHP Req'd (25K/350ktas/ISA)	shp per eng	3533	3238
Total Disc Area	sq ft	1790	2705
Rotor Radius	ft	16.88	20.75
Wing Area	sq ft	326.4	390.7
Wing Span	ft	42.86	54.6
Wing Aspect Ratio		5.628	7.64
Payload	lb	8000	8000
Weight Empty	lb	26347	31975
WE/WG		.646	.68
Aircraft Economics at 200 nmi Mission			
Block Fuel	lb	1438.3	1584
Block Time	min	48.79	49.74
A/C Sell Price	$M	17	17.7
DOC	(¢/ASM*)	19.5409	22.71
DOC	$/Trip	1563.27	1816.80

* ¢/ASM = cents per available seat mile

The GEAE baseline aircraft model was developed based on the same ground rules as the NASA model, but varies in design detail. The GEAE aircraft model incorporates design aspects of study aircraft from several aircraft companies and NASA. Both the V22 and the Boeing CTR2000 study aircraft had a strong influence on the aircraft definition. The GEAE civil tilt rotor has a hover power requirements similar to the NASA Ames model, but has a cruise lapse rate (cruise versus hover power) similar to the Boeing study aircraft. (See Table 2.) Using a scaled GE38 as a reference, an engine sized by the max cruise power requirement would have a contingency power requirement 29% above its normal (5 minute) takeoff power rating. This is the same CPR (1.29) as the Boeing CTR2000 study aircraft. The NASA tiltrotor's hover power requirement is virtually identical to the GEAE defined aircraft, but the NASA rotorcraft's more efficient cruise results in a CPR of 1.40.

Table 2. Contingency vs. Normal Operation Power Requirements

Aircraft	GEAE Baseline Cruise	GEAE Baseline Hover, OEI	NASA 4/95 Baseline Cruise	NASA 4/95 Baseline Hover, OEI	Boeing CTR2000 Cruise	Boeing CTR2000 Hover, OEI
Alt	25000	2000	25000	2000	30000	2000
ktas	350	0	350	0	350	0
T amb	ISA	ISA+20C	ISA	ISA+20C	ISA	ISA+20C
N rotor	84%	100%	84%	100%	84%	100%
HP Required (Per Engine)	3533	8446	3238	8448	2725	7780
Scaled GE38 Rated Power (Max Cruise, T/O)	3533	6558	3238	6011	2725	6032
HP Required / HP Available	1	1.29	1	1.40	1	1.29

DOC models were established for both the NASA Ames and GEAE baseline aircraft. The engine parameters which affect aircraft DOC were then perturbed to establish their impact on aircraft economics. Appendix A shows a sample baseline aircraft sizing, and the impact of varying engine power/weight, acquisition cost, maintenance cost, and mission specific fuel consumption (SFC) on aircraft size and DOC. Table 3 compares the sensitivities of aircraft DOC to engine parameters of the GEAE and NASA baseline aircraft models. The DOC sensitivities were assessed for a the typical 200 nmi mission.

Table 3. Aircraft DOC Sensitivities To Engine Parameters

200 nmi Mission

(% Change In DOC)/(% Change In Parameters)

	GE DOC Model	NASA DOC Model
Power/Weight	.075	.044
SFC	.181	.175
Acquisition Cost	.110	.110
Maintenance Cost	.070	.079

These aircraft models are good tools for evaluating contingency power enhancing concepts. The range of CPR requirements of 1.29 to 1.40 covers the majority of the civil tiltrotors in this speed and size class studied by the various aircraft companies. Using aircraft models with different design philosophies helps to ensure that the engine technologies selected benefit this class of aircraft and not merely a specific aircraft design.

BASELINE ENGINE DEFINITION

A baseline engine was defined as a standard against which to measure enhanced contingency power engine concepts. The ground rules for the baseline engine were that it represent year 2005 entry into service (EIS) technology, but not have any unique features not currently employed to augment contingency power. The NASA Technical Program manager further specified that features such as ceramic blades, or materials and thermal barrier coatings not yet developed, were not allowable technologies.

The baseline engine is a front drive turboshaft with a single spool core and a free power turbine. (See Figure 4.) A three stage axial compressor is mated to a single stage centrifugal compressor to produce a design cycle pressure ratio of 24.75:1. The compressor is driven by a single stage high pressure turbine (HPT), and shaft power is provided by a 3 stage co-rotating power turbine (PT). The core configuration is similar to a GEAE advanced technology military turboshaft demonstrator engine core, but has been tailored to meet commercial product requirements. It also utilizes technologies developed under a number of other GEAE advanced technology and component development programs. All technologies clearly fall within the 2005 EIS time frame.

A rotorcraft engine's size is determined by the either normal operation commercial life (and maintenance cost) goals or the certification endurance test of the contingency power rating. The 30 second and 2 minute contingency power rating structure, allowed under FAR Paragraph 33.7, was selected by NASA for this study on the recommendation of the SHCT Propulsion Working Group. The new FAA certification procedures for 30 second and 2 minute contingency power ratings are described in FAR 33.87. Briefly, FAR 33.87 specifies testing that simulates 4 complete OEI episodes (8 uses of the 30 sec and 2 min ratings), in addition to the usual endurance testing. Testing is conducted at redline turbine temperatures (average engine T41 + 150°F) <u>and</u> redline core speed. The endurance test should be much more severe than an actual OEI event in the field, as an inspection is required after each use of these ratings in commercial operation. The FAA's intent was to allow very high contingency power ratings of appropriate duration to help reduce engine size, yet require testing that would ensure a significant margin of safety. GEAE has experience in certifying an engine to these new ratings, and understands the sizing implications of the certification endurance test. These new short duration contingency ratings substantially reduce the degree to which the OEI rating sizes the engine in civil rotorcraft applications.

Baseline Engine - Uncooled Power Turbine Throttle Push

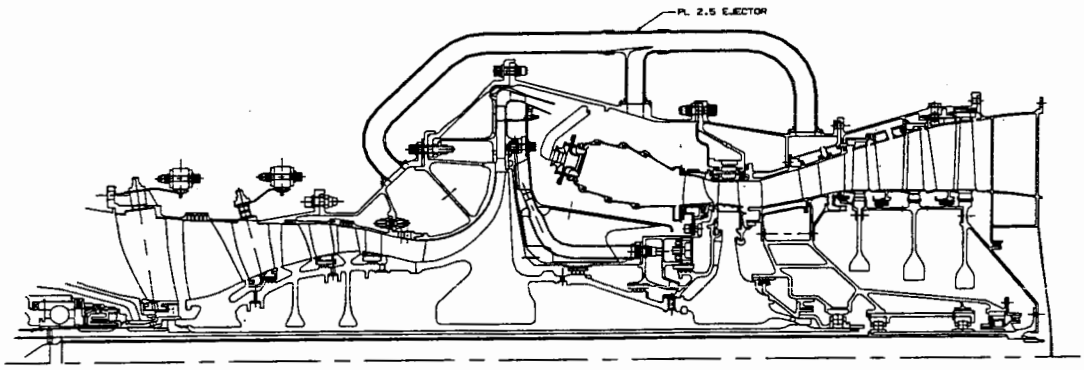

- Simple 3 + 1 + 1 Core Configuration With 3 Stage Power Turbine
- Materials And Technology Level Consistent With Year 2005 EIS
- Engine Sized By Uncooled Power Turbine Temperature Limit At OEI
- Engine Very Oversized For Normal Operation
- 30 Sec Contingency HP = 8448 @ 2K/ISA +20°C
  $W2R_{nominal}$ = 36.6, $P/P_{nominal}$ = 24.75, T41 Redline = 2860°F
  Weight = 1370 lb, Length = 45.8", Diameter = 32"

Figure 4. Baseline Engine Concept

As expected, the baseline engine was sized by the 30 sec contingency rating in the certification endurance test. The redline value of engine core physical speed was set at the 30 sec contingency rating to provide adequate HPT and impeller disk burst margin. The maximum contingency HPT temperature (T41 redline) was set by the temperature (T45) limit of the advanced mono-crystal material of the uncooled 1st stage power turbine blade. Cooling flow levels in the HPT and purge flow levels throughout both turbines were set to provide adequate life for the certification endurance test. Cooling flow levels were much higher than required to meet commercial goals under normal mission operation. This sizing results in an engine which operates at relatively low turbine temperatures during normal mission operation. Turbine temperatures have a significant impact on power-to-weight and low thermal efficiency (i.e., SFC). A summary of the baseline engine cycle and performance is given in Table 4 for the 30 sec contingency rating, max cruise rating, and the nominal aero design point.

Table 4. Baseline Engine Cycle at Critical Operating Conditions

Rating	30 sec OEI	Max Cruise GEAE	Max Cruise NASA	Aero Design	30 sec OEI
Alt	2000	25000	25000	0	0
ktas	0	350	350	0	0
T amb	ISA+20C	ISA	ISA	ISA	ISA
N rotor	100%	84%	84%	100%	100%
SHP (ESHP)	8448	3533	3238	9085	10050
SFC (ESFC)	.363	.342	.346	.357	.358
W2R (lb/s)	36.3	33.9	32.6	36.6	38.1
P/P overall	24.4	22.1	21.1	24.75	26.3
T41 (°F)	2710	2110	2050	2580	2710
T41 Redline	2860 °F				
T45 Redline	1970 °F				
Ncore Redline	105%				
Wcool (totlal)	9.6% of W2				
Engine Weight	1370 lb				
Engine Length	45.8 in				
Engine Diameter	32.0 in				

CONTINGENCY POWER ENHANCEMENT CONCEPT SCREENING STUDY

A wide variety of engine concepts were identified and screened for potential for enhancing contingency power and reducing operating cost. The notional concepts were developed in sufficient detail to determine whether they merited further study. Optimistic but reasonable design assumptions were made to prevent premature elimination of concepts with good potential. Rough order of magnitude estimates were made of impact on aircraft operating costs versus the baseline engine. Other factors used in the evaluation included safety, potential for certification, development risk, and impact on aircraft installation.

Concepts screened [and their methods of enhancement] include:

- Cooled Power Turbine Throttle Push [Increase turbine temperature]
- Modulated Turbine Cooling Airflow [Increase turbine temperature for OEI]
- Water Injection Into Cooling Airflow [Increase turbine temperature for OEI]
- Water Injection Into Compressor Inlet [Increase mass flow for OEI]
- Interturbine Regenerative Variable Cycle
  [Simple cycle for OEI ⇒ Regenerative cycle for improved cruise SFC]
- Interturbine Reheat Variable Cycle
  [Reheat cycle for OEI power ⇒ Simple cycle for normal operation]
- Emergency Power Unit [Auxiliary unit for OEI power]
- Clutched Supercharger [Increase mass flow for OEI]
- Variable Exhaust Geometry [Increase power turbine extraction for OEI]

Many of the concepts attempt to provide emergency power by temporarily boosting turbine temperature or engine mass flow. Other concepts attempt to significantly raise turbine temperature capability during both emergency and normal operation. Raising turbine temperatures and mass flow are the most obvious means of increasing power. The high turbine metal temperatures and core physical speed of the baseline engine makes further increases in temperature and air flow very challenging. The baseline engine is pushed to the physical speed and temperature limits of the technology level allowed in this study. The baseline engine is equivalent in philosophy to the "throttle push" engine concepts of previous contingency power studies. This makes the baseline engine an excellent evaluation tool, because it represents the limit of the chosen level of technology using a conventional engine design.

The unique engine concepts were defined with the same level of technology as the baseline engine, and met the same propulsion requirements as the baseline engine. The core configuration and component performance of the baseline engine were retained unless modifications were justified. All engines were sized by the same material temperature limits, and physical and corrected speed limits as the baseline engine.

A brief discussion of each of these concepts follows, along with a summary of the enhancement concept, method of execution, unique hardware, design assumptions, intended benefits, and development and risk issues.

Cooled Power Turbine Throttle Push

The baseline engine was sized by the raising T41 until the power turbine 1st stage blade reached its material temperature limit at the 30 sec rating in the certification test. This engine concept provides blade and vane (and other associated hardware) cooling to the power turbine as well. T41 and HPT cooling are increased, and as many stages of the power turbine are cooled as required. Ideally, the temperature and cooling would be increased until the engine is simultaneously sized by the contingency power certification test and the normal mission life requirements (i.e., "Dual Sized"). Turbine temperatures during normal operation are higher, which can increase thermal efficiency and reduce fuel burn. Power turbine cooling air comes at much greater expense to the engine cycle than HPT cooling air, however, as it is returned to the engine after turbine stages that produce shaft power. Much of the cooling air needed for components to survive contingency power is unnecessary during normal operation. Routing of cooling air to the power turbine blades can be challenging in certain engine configurations.

- **Concept**
  - Provide Cooling to Power Turbine Blades And Vanes to Allow Much Higher Turbine Operating Temperatures

- **Execution**
  - Cool Power Turbine Components and Increase HPT Temperature and Cooling. Size Engine by Both Certification and Mission Life Requirements (Dual Sized),
  - T41 Level Determined by Most Economical Trade of Materials and Cooling

- **Unique Hardware**
  - Cooled PT Blades, Vanes And Associated Hardware For Those Components Uncooled In Baseline Engine.

- **Assumptions**
  - 600°F T41 Increase Vs. Baseline
  - Cooling Flow Adjusted To Maintain Metal Temperature Limits

- **Benefits**
  - Reduces Core Size ~30%
  - SFC Improved Due To Higher T41 (Thermal η)

- **Issues**
  - Life Prediction For Short Duration/Extreme Temps

Modulated Turbine Cooling

This concept attempts to further improve the Cooled Power Turbine Throttle Push Concept by supplying the high level of cooling only during contingency power, and reducing cooling to those components with excess cooling during normal operation. The added benefit of this concept is reduced fuel consumption during normal operation. The extent to which the cooling flow can be reduced during normal operation is limited by the potential for backflow of hot gases into the cooling passages. Adequate purge airflow (plus some safety margin) must be maintained to exceed hot gaspath pressures to prevent backflow.

- **Concept**
  - More Turbine Cooling During Contingency to Allow Higher Temperatures, Less Cooling During Mission Operation for Better SFC.

- **Execution**
  - Cooling Air Flow to Both Turbines Is Modulated by a 2 Position Valve.

- **Unique Hardware**
  - Regulating Valves and Actuation Mechanism
  - Special Cooling Flow Routing, Cooled PT Blades, Vanes and Associated Hardware for Components that are Uncooled in Baseline Engine
  - Added Control Complexity (Minor)

- **Assumptions**
  - 600°F T41 Increase Versus Baseline
  - Cooling Flow Adjusted To Maintain Metal Temps

- **Benefits**
  - Reduces Core Size ~30%
  - SFC Improved due to Higher Cycle T41, Variable Cooling

- **Issues**
  - Hot Gas Backflow Margin Limits Range of Modulation
  - Life Prediction at Short Duration/Extreme Temps

Water Injection Into Turbine Cooling

Similar to the Modulated Turbine Cooling Concept, the intent is augmented cooling for contingency and less cooling during normal operation. The method for augmenting cooling is by injecting water into the cooling airflow. Water injection dramatically reduces the cooling air temperature through evaporative cooling, reducing the amount of cooling air required during contingency. The cooler temperatures also increase the cooling air density, allowing more dry air to be pumped through the cooling passages without additional modulation hardware. Water also increases the specific heat of the cooling medium. Many of the same issues of power turbine cooling and minimum flow to prevent backflow also apply to this concept.

- **Concept**
  - Water Injection Into Turbine Cooling Air Increases Flow, Reduces Cooling Air
  - Temperature, Improves Cp. Allows Higher T41 at OEI.

- **Execution**
  - Cooling Sized by Mission Requirements. Water Injection into Cooling Circuit during Contingency.

- **Unique Hardware**
  - Water Storage Tank
  - Pump, Diaphragm, Pressurizer, And Flow Regulator
  - Injection Manifold (Internal Or External)
  - Thermal Shielding

- **Assumptions**
  - Water Injection - 10% Of Cooling Air.
  - Allows 600°F T41 Increase.

- **Benefits**
  - Reduces Core Size For OEI By ~30%.
  - Mission SFC Improved Due To Increased T41.

- **Issues**
  - Thermal Shock Due To Water Injection.
  - Configuration, Complexity, Room For Injection Manifold.
  - Water Needs to Be Monitored, System Cannot Self Test.
  - Life Prediction For Short Duration/Extreme Temps.

Water Injection Into Compressor Inlet

This concept boosts contingency power by increasing engine airflow, effectively increasing engine size. Water injected into the engine inlet increases air density due to evaporative cooling, allowing more airflow within the same flowpath. Reduced compressor work (due to lower temperatures) leaves more energy available for the power turbine. Cooling the compressor air reduces the turbine cooling air temperature and amount required. Great care must be taken to inject water in such a way as to produce even and quick evaporation. Uneven evaporation could cause inlet flow distortion and localized stalls. Unevaporated water impinging on blades or casings could significantly change clearances, effecting performance or causing rubs. The amount of water injection possible is limited because large digressions from design corrected airflow in any stage could induce stall. The small blade tip clearances and high stage loading of advanced compressors increase the danger of these last two effects.

- **Concept**
  - Inject Water Into Compressor Inlet During OEI. Increases Mass Flow, Reduces Compressor Work and Cooling Air Temperature.

- **Execution**
  - Water Injected Via a Manifold In The Compressor Front Frame

- **Unique Hardware**
  - Water Tank
  - Water Flow Regulator
  - Pump Or, Pressure Driver
  - Added Control Complexity

- **Assumptions**
  - Water Injection Up To 0.8% Of Airflow (Limit To Avoid Stall)
  - Evaporation Starts In Inlet, Complete By End Of Axial Compressor
  - Reduced Cooling Temperature

- **Benefits**
  - Core Size For OEI Reduced Up To 8%
  - Higher Mass Flow
  - Reduced Cooling Flow due to Lower Cooling Temperature.

- **Issues**
  - Evaporation Assumptions May be Optimistic
  - Compressor Stall During Water Injection
  - Effect on Compressor Clearances: Efficiency and Potential Rubs
  - Weight of Water and Delivery System

Interturbine Reheat Variable Cycle

In normal operation, this engine functions as a simple cycle engine. During contingency, additional fuel is injected between the HPT and power turbine, which raises power turbine temperature (and power) without raising HPT temperature. This is referred to as a reheat cycle. A variable area turbine nozzle (VATN) would be required in the power turbine because of the large increase in turbine flow function during contingency mode. The VATN would be an advantage, however, in optimizing engine operation throughout the mission. The main challenge in this concept is combustion in the high Mach number interturbine duct without adding a second combustor that would only be used in an emergency. Hydrazine (which separates into nitrogen and hydrogen) ignites easily and burns rapidly, and does not require a combustor, flameholder, or additional length due to the high flame speed. It can simply be sprayed into the interturbine duct by injectors flush with the wall, and will autoignite and sustain at these temperatures. There are several concerns with this concept. First, cooling the power turbine during contingency can be difficult with hot streaks due to the lack of combustor. Second, the additional weight due to the hydrazine and other hardware almost equals the percentage increase in power during contingency. Lastly, certifying a fuel as dangerous as this for civil aircraft is highly unlikely. While hydrazine is used in EPU's in the F-16, civil aviation safety standards are much higher than those for single engine military aircraft.

- **Concept**
  - Simple Cycle During Normal Operation, Reheat Cycle for OEI
- **Execution**
  - Inject Hydrazine into Interturbine Duct During OEI. Hydrazine Flame Speed And Burn Rate Allows Interturbine Duct Burning Without Flameholder
- **Unique Hardware**
  - Hydrazine Storage Tank, Pump And Flow Regulator
  - I/T Duct With Injector Manifold
  - Power Turbine VATN
  - Modulated PT Cooling Flow (or +4% Pt Cooling)
  - Added Control Complexity (Significant)
- **Assumptions**
  - 400°F Interturbine Reheat
  - Autoignition and Complete Burn of Hydrazine
  - No Significant I/T PT Loss During Normal OPS
  - Modulated Power Turbine Cooling
  - Power Turbine Flow Function Controlled by VATN
- **Benefits**
  - Core Size for OEI Reduced More Than 5% @ Same T41
- **Issues**
  - Hydrazine Needed Is 5% Of Engine Weight
  - Complete Combustion In Duct Would Need To Be Demonstrated
  - Hot Streaks Due To Lack Of Combustor
  - VATN And Modulated PT Cooling Flow
  - Hydrazine Questionable For Civil Certification

Interturbine Regenerative Variable Cycle

This concept employs a completely different approach to reduce aircraft operating costs. It does not attempt to boost contingency power, but rather takes advantage of the lower power requirement during normal operation to reduce SFC. Interturbine regenerative engines preheat the compressor discharge air before it enters the combustor by routing it to a heat exchanger located between the HPT and power turbine. This reduces the fuel required to reach the desired T41, significantly improving SFC. The temperature drop across the hot side of the heat exchanger reduces the inlet temperature to the power turbine, which also reduces power compared to a simple (nonregenerative) cycle engine. In normal mission operation, where power requirements are low, this concept acts as a regenerative engine with its attendant low fuel consumption. When contingency power is required, a diverter valve routes the compressor discharge air directly to the combustor, bypassing the heat exchanger. This converts the engine to a simple cycle configuration, which increases the power available at the same T41. A power turbine VATN would be required because of the large difference in turbine flow function between regenerative and simple cycle operating modes. Again, the VATN would be useful in optimizing normal mission engine operation. The heat exchanger, ducting, diverter, and VATN would add significant engine volume, weight, complexity, and cost. A ceramic heat exchanger is required at these temperatures, which tend to be extremely bulky and more prone to cracking in aircraft applications. Heat exchanger temperatures become extremely high during contingency because the cool side air is bypassed in this mode. Even with optimistic assumptions on heat exchanger size, weight, and cost, this engine concept cannot show a benefit in a short haul mission. This concept would best serve applications with high contingency power requirements and very long range missions where aircraft DOC is largely a function of SFC.

- **Concept**
  - Simple Cycle During OEI for Good SHP/W2R.
    Regenerative Cycle During Normal Operation for Good SFC.

- **Execution**
  - Interturbine Heat Exchanger Preheats Combustor Air During Normal Operation to Reduce Fuel Burn. (Regenerative Cycle)
  - Bypass Valve Directs Compressor Air to Combustor (Simple Cycle) for More Power During OEI

- **Unique Hardware**
  - Interturbine Heat Exchanger
  - Diverter Valve And Actuator (Sends Flow To HEX Or Combustor)
  - Ducting (Compressor → I/T HEX → Combustor)
  - Variable Area Power Turbine Nozzle (VATN)
  - Added Control Complexity (Significant)

- **Assumptions**
  - Same Maximum T41 and Core Speed @ OEI as Baseline
  - Ceramic Heat Exchanger (Required at These Temperatures)
  - Hex_{Eff} = 0.5 To 0.7 (Limited By Normal Operation Power Requirement)
  - Hex, Ducting, Diverter Valve, and Configuration Changes add only 20% to Engine Weight (Optimistic)

Interturbine Regenerative Variable Cycle (Continued)

- **Benefits**
  - Potential 10% To 13% Mission SFC Improvement
  - VATN Allows Tailoring of Cycle Throughout Mission

- **Issues**
  - Ceramic Heat Exchanger Uncooled During OEI (Risk)
  - Size Of Heat Exchanger, Ducting
  - Added Weight, Cost, Complexity Due To Hex, Valving, VATN

Sensitivity To Contingency Power Requirement And Mission

- Higher CPR and Extremely Long Mission Would Put More Emphasis on SFC and Favor this Concept

Clutched Compressor Booster

The goal of this concept is to operate as a large compressor during contingency and a small compressor during normal operation. The concept has a first compression stage (used during contingency) that can be declutched and allowed to windmill at lower power operation, effectively making a smaller compressor. This compressor stage could be driven by the HPT or the power turbine.
The fundamental problem with this concept is that the airflow required for contingency power sizes the compressor as large as the baseline engine, but the clutch adds cost and weight. Declutching the first stage during normal operation also reduces cycle pressure ratio, which negatively impacts SFC. Additional issues include clutch viability and response time, and the need for a variable geometry aircraft inlet.

- **Concept**
  - Full Mass Flow When Needed During OEI, Reduced For Normal Ops

- **Execution**
  - Clutched Compressor Stage
  - Either Core or Power Turbine Driven
  - Windmills During Normal Engine Operation

- **Unique Hardware**
  - Booster Stage Clutch (Magnetic Or Torque Converter)
  - Power Turbine VATN for Flow Function Control
  - Added Control Complexity (Significant)

- **Assumptions**
  - T45 @ OEI Same as Baseline
  - OEI Air Flow Approximately Same as Baseline
  - Pressure Loss Due to Windmilling Booster Stage is Very Small

- **Benefits**
  - Essentially is Full Compressor for OEI, Small Compressor for Cruise
  - VATN Allows Flexibility In Operation

- **Issues**
  - Overall Compressor Size Same as Baseline, Clutch And VATN Only Add Weight
  - Pressure Ratio Reduced During Normal Mission, Yielding Worse Mission SFC
  - Clutch Feasibility, Reliability, Losses, Response Time
  - Variable A/C Inlet Needed to Eliminate Inlet Spillage
  - Essentially No Benefits - Concept Eliminated

Variable Exhaust Geometry

During hover, OEI a low exhaust nozzle pressure ratio maximizes shaft power available to drive the aircraft rotor. A higher nozzle pressure ratio is optimal for equivalent power in high speed cruise, where exhaust thrust can make a significant (and fuel efficient) contribution to system (rotor + exhaust) thrust. A relatively simple two position exhaust nozzle could have an area ratio optimized for mission fuel burn, then open to a larger area during contingency to maximize turbine power extraction. Variable turbine outlet guide vanes (OGV's) would further enhance exhaust system performance. The gains in performance, however, were shown to be relatively small. Compared to a fixed geometry exhaust nozzle optimized for mission fuel burn, a variable geometry exhaust system only reduces engine size required for contingency by about 3%. This concept would most benefit a mission with a higher cruise speed and longer mission where thrust equivalent SFC has more impact on aircraft DOC.

- **Concept**
  - Optimize Exhaust Nozzle Pressure Ratio (And OGV Incidence) For:
  - Maximum Power Extraction During OEI
  - Minimum Equivalent SFC During Mission

- **Execution**
  - Two Position Exhaust Nozzle
    - Low Nozzle P/P for Hover
    - High Nozzle P/P for Optimum Cruise
  - Optional Variable OGV Leading Edge to Minimize Incidence

- **Unique Hardware**
  - Two Position Nozzle
  - Optional V.G. OGV
  - Actuation Hardware
  - Added Control Complexity (Small)

- **Assumptions**
  - Good Nozzle/Diffuser Performance From A Simple, Two Position Design

- **Benefits**
  - 3% Smaller Core Versus Engine With Fixed Geometry Nozzle Sized For Optimum Cruise Performance

- **Issues**
  - Difficulty In Achieving Good Diffuser Performance In A Simple Lightweight Design
  - Performance Improvement Potential Small
  - No Significant Net System Benefit

Emergency Power Unit (EPU)

Using a separate emergency power unit to provide contingency power allows the primary engines to be sized only by normal mission requirements. In a cross-shafted installation, only one EPU is needed. Many different types of units were considered. The key distinctions from the aircraft installation standpoint are weight, volume, and whether or not the unit is air breathing. One concept was a monopropellant powered turbine; essentially a JATO (Jet Assisted Takeoff) type rocket motor driving a small power turbine, discharging through a separate exhaust. The other concepts were auxiliary airbreathing engines. The engine could be a unit designed for low cost, or simply a destaged version of the primary engines (for commonality). The airbreathing engines could be run on aircraft fuel or hydrazine. Those concepts operating from the main fuel supply concepts would need to be running during every takeoff and landing for adequate response time. Ignition on a hydrazine fueled concept might be reliable and quick enough to assume operation on demand. Airbreathing EPU's would need an auxiliary aircraft inlet that would close in forward flight. All these concepts would require significant installation volume, as well as overrun clutches and additional reduction gearing. All would require separate certification for the EPU and the primary engines (cost). The weight, cost, complexity, installation, and maintenance issues make EPU's an unattractive solution to civil aircraft companies.

- **Concept**
  - Auxiliary Power Unit Sized to Provide Required Contingency Power Margin.
  - Allows Main Engines to be Sized for Normal Mission Operation.

- **Execution: Various Options**
  - Monopropellant Powered Turbine
  - Inexpensive, Crude Engine
  - Destaged Version of Main Engines (Gives Parts Commonality for Maintainability)
  - Airbreathing Engines Use Main Fuel Supply or Hydrazine

- **Unique Hardware**
  - Auxiliary Power Unit
  - Aircraft Exhaust. Variable Geometry Aircraft Inlet (for Airbreathing Engines)
  - Additional Reduction Gearing And Overrun Clutch
  - Control Unit

- **Assumptions**
  - Room Available for Installation in Aircraft
  - Variable Aircraft Inlet Geometry (Closed During Forward Flight to Eliminate Inlet Spillage)
  - EPU Engine Running During Takeoff and Landing for Good Response

- **Benefits**
  - Main Engines Optimally Sized for Normal Mission Operation

- **Issues**
  - Installation Difficulty, Especially with Airbreathing APU
  - Must Relight for Landing Safety
  - Maintenance, Weight, Cost
  - Low Acceptability with Airframers: <u>Concept Eliminated</u>

Concept Screening

The concepts were screened based on rough estimates of impact on aircraft operating cost. A range of contingency power requirements were considered to determine if CPR had a significant impact on concept selection. Feasibility (development risk) and safety (certification potential) were also major screening factors. In Table 5, each concept is ranked for potential for improving DOC, feasibility, and safety, and gives an overall concept ranking.

Table 5. Screening Study Concept Ranking

	A/C DOC	Feasibility	Safety	Overall
Baseline (Uncooled PT Throttle Push)	5*	1	1	4
Cooled PT Throttle Push	1*	2*	1*	**1***
Modulated Cooling Flow	1*	2*	1*	**1***
Water Injected Cooling	1*	2*	5	**3**
Water Injected Inlet	4	7	6	5*
I/T Reheat Variable Cycle	7*	9	10	9*
I/T Regenerative Variable Cycle	7*	8	7*	7*
Clutched Booster Stage	9	10	7*	9*
Variable Exhaust Geometry	5*	2*	1*	5*
Emergency Power Unit	10	2*	7*	7*

Ranking: 1 = Best, 10 = Last. Relative Ranking Of Concepts. Not A Numerical Score.

* Concepts Tied In Ranking

Aircraft DOC: Potential To Reduce Aircraft Operating Costs

Feasibility: Potential For Realization Of Key Technologies

Safety: Certification Potential Of Engine Concept

Overall: Overall Concept Ranking

Note: Concepts Ranked Below Baseline In DOC Or Overall Ranking Do Not Merit Further Consideration

Specific areas of safety or development risk were identified for each concept and are listed below.

Areas Of Risk

- All Concepts
  - Life Prediction at Short Duration/Extreme Temps

- Modulated Cooling
  - Cooling Backflow (Normal Ops)

- Water Injection Into Cooling
  - Thermal Shock due to Water Impingement (OEI)
  - Cooling Backflow (Normal Ops)

- Water Injection into Compressor Inlet
  - Raised Compressor Opline (Stall)
  - Effect On Clearances (η, Rubs)

- Interturbine Regenerative Variable Cycle
  - Ceramic Heat Exchanger, Diverter Valve

- Interturbine Reheat
  - Hot Streaks In Power Turbine (OEI)
  - Hydrazine Combustion, Safety, Certification

- Clutched Booster
  - Clutch (Feasibility, Reaction Time)

- Emergency Power Unit
  - Reaction Time, Ignition Reliability

Concepts eliminated by the screening study and reasons for elimination follow.

Concepts Eliminated:

- Water Injection into Compressor Inlet
  - Small Payoff
  - Potential for Compressor Stall, Rubs

- Variable Exhaust Geometry
  - Negligible Payoff

- Interturbine Regenerative Variable Cycle
  - No Payoff (Weight, Size, Cost)

- Interturbine Reheat Variable Cycle
  - No Payoff (Hydrazine Weight)
  - Hot Streaks In Power Turbine (OEI)
  - Hydrazine Combustion, Certification

- Clutched Booster
  - No Payoff (SFC, Weight, Cost)
  - Clutch (Feasibility, Reaction Time)

- Emergency Power Unit
  - No Payoff (Weight, Cost)
  - Installation Volume, Complexity
  - Ignition Reliability, Reaction Time

Concepts Selected for Further Study:

Only three concepts showed significant potential for reducing aircraft operating costs in this application;

- **Cooled Power Turbine Throttle Push**
- **Modulated Turbine Cooling**
- **Water Injection Into Turbine Cooling**

These concepts also showed good potential for realization of key technologies, and no barriers to certification.

DEFINITION AND EVALUATION OF SELECTED CONCEPTS

Three engine concepts were selected for a more rigorous definition and evaluation against the baseline engine. Each of these engine concepts was defined to meet the same minimum commercial life, certification, and propulsion requirements as the baseline engine. The engines were sized to meet the power requirements of both the NASA and GEAE defined baseline aircraft. The impact of a significantly higher contingency power requirement (CPR = baseline * 1.25) was also assessed to determine its effect on technology selection. The engines were defined to minimize aircraft operating costs and were evaluated using both the GEAE and NASA DOC models.

The core configurations of the selected engine concepts are similar to the baseline engine. Each is a front drive turboshaft with a single spool core. The core has a 3 stage axial compressor, a single stage centrifugal compressor, and a single stage high pressure turbine. Each configuration also has a three stage power turbine. All configurations were defined with the same compressor pressure ratio. The compressor mechanical and aerodynamic design is the same for all engine concepts, and is simply scaled by engine airflow to meet the power requirements. Engine weight, cost, and dimensions were scaled accordingly. The selected engine concepts contain the same level of materials technology as the baseline engine. The combustor and turbines are defined to the same mechanical and aero limits, and the same contingency power requirement used by the baseline.

The baseline engine (Figure 5) was sized by the contingency power requirement. The core physical speed limit and power turbine temperature limit at the 30 second rating determined the engine size need to provide contingency power. The selected concepts were also sized by the contingency power requirement. Since these engine had the same core physical speed limit (and therefore core performance) at contingency as the baseline engine, the engines were sized by the higher operating temperatures allowed by the unique turbine cooling features

The baseline engine turbine inlet temperature,T41 was limited by the material temperature limit of the 1st stage power turbine blade at the 30 second contingency power rating. The **Cooled Power Turbine Throttle Push** engine concept provides cooling air to the blades and vanes of the power turbine. T41 and HPT cooling are increased, and the blades and vanes of the power turbine are cooled to maintain the same metal temperature limits at contingency as the baseline engine. The level to which T41 is increased is an economics and performance trade. Increasing T41 raises the specific power, allowing for a reduction in engine size. Cycle temperature increases were balanced against the SFC and cost penalties associated with adding cooling to components that are uncooled in the baseline engine. Cooling the blades and vanes of the first and second stage of the power turbine (and increasing HPT cooling) allowed a contingency T41 620°F higher than the baseline engine. (See Figure 6.) The cooling flow were set by the contingency power certification test, and are higher than needed to meet normal mission life requirements. Some components are cooled to survive the contingency rating that would not require any cooling during normal mission operation.

The **Modulated Turbine Cooling** concept is similar to the Throttle Push Concept in that T41 is increased and the LPT is cooled. However, this concept attempts to obtain further benefits in performance by reducing excess cooling flow during normal operation. Cooling flow to both the HPT and power turbine is modulated using external valving. (See Figure 7.) Cooling is increased during contingency to survive the high temperatures, and is lowered during

Baseline Engine - Uncooled PT Throttle Push

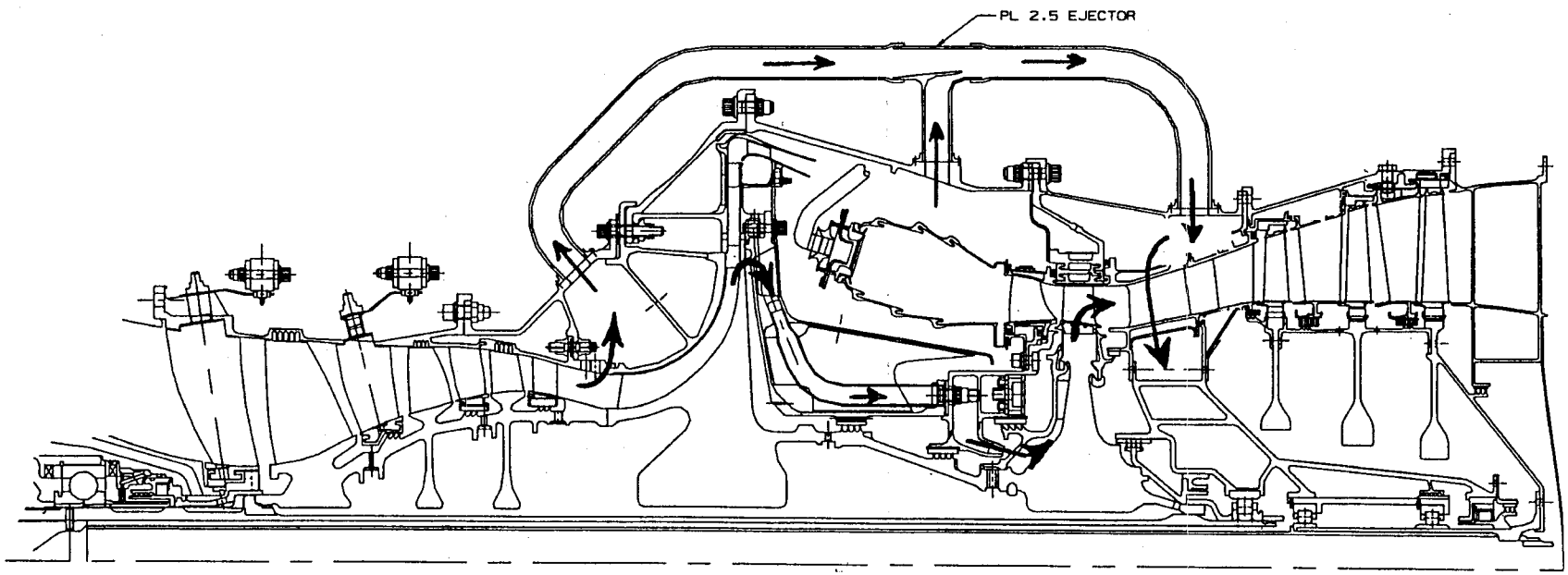

- Materials and Technology Level Consistent with Year 2005 EIS.
- Engine Sized by by Uncooled Power Turbine Temperature Limit at OEI.
- Engine Very Oversized for Normal Operation.

Figure 5. Baseline Engine Concept

Cooled Power Turbine Throttle Push Engine Concept

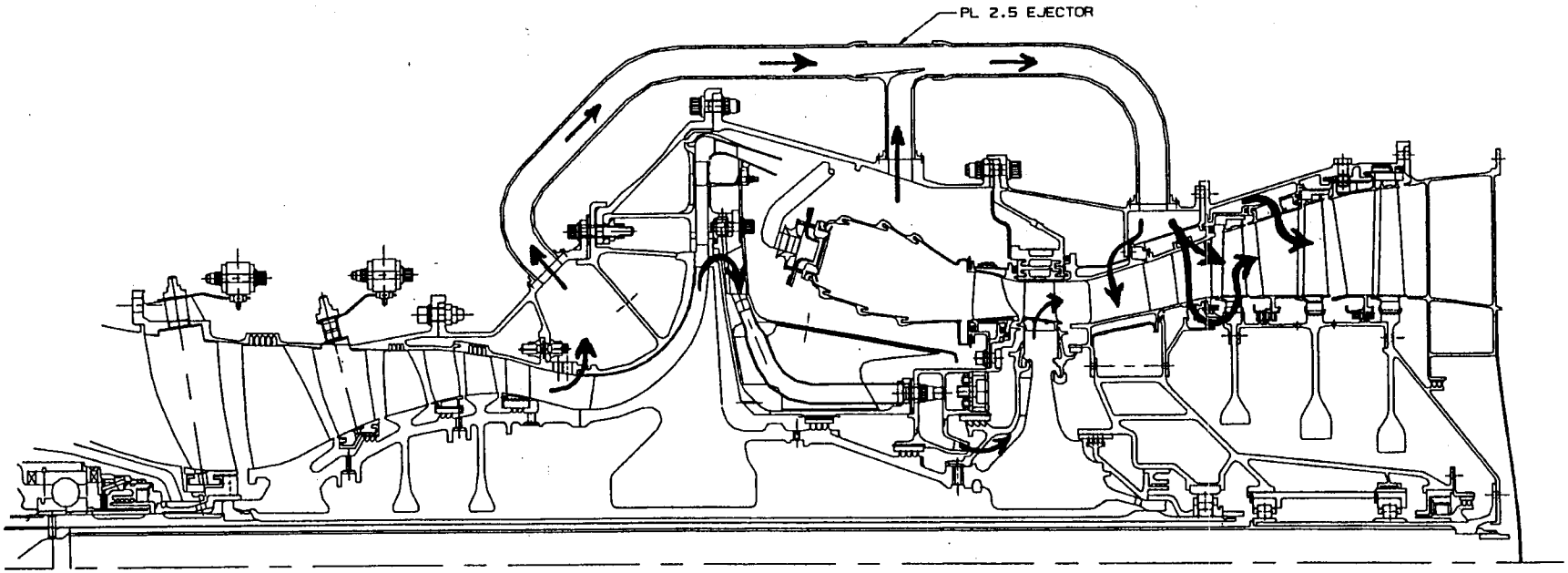

- Power Turbine Is Cooled and Throttle is Pushed
  - Allows 620°F higher TIT than baseline, and better mission SFC.
  - Degree of throttle push vs. materials & cooling is an economic trade.

Figure 6. Cooled Power Turbine Throttle Push Concept

Modulated Turbine Cooling Engine Concept

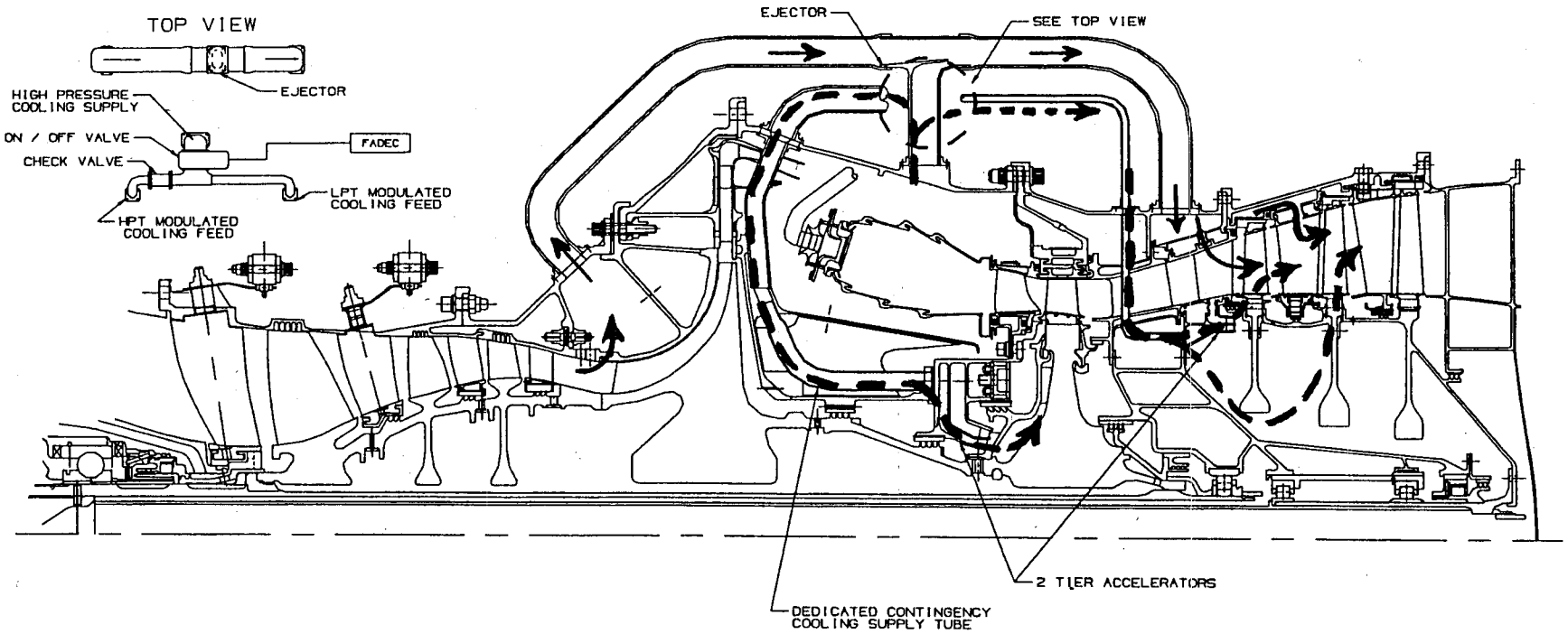

- Cooling Boosted During Contingency, Reduced for Normal Operation.
  - Power turbine cooled and modulated.
  - Allows 620°F higher TIT than Baseline, and better mission SFC.

Figure 7. Modulated Turbine Cooling Engine Concept

Water Injected Turbine Cooling Engine Concept

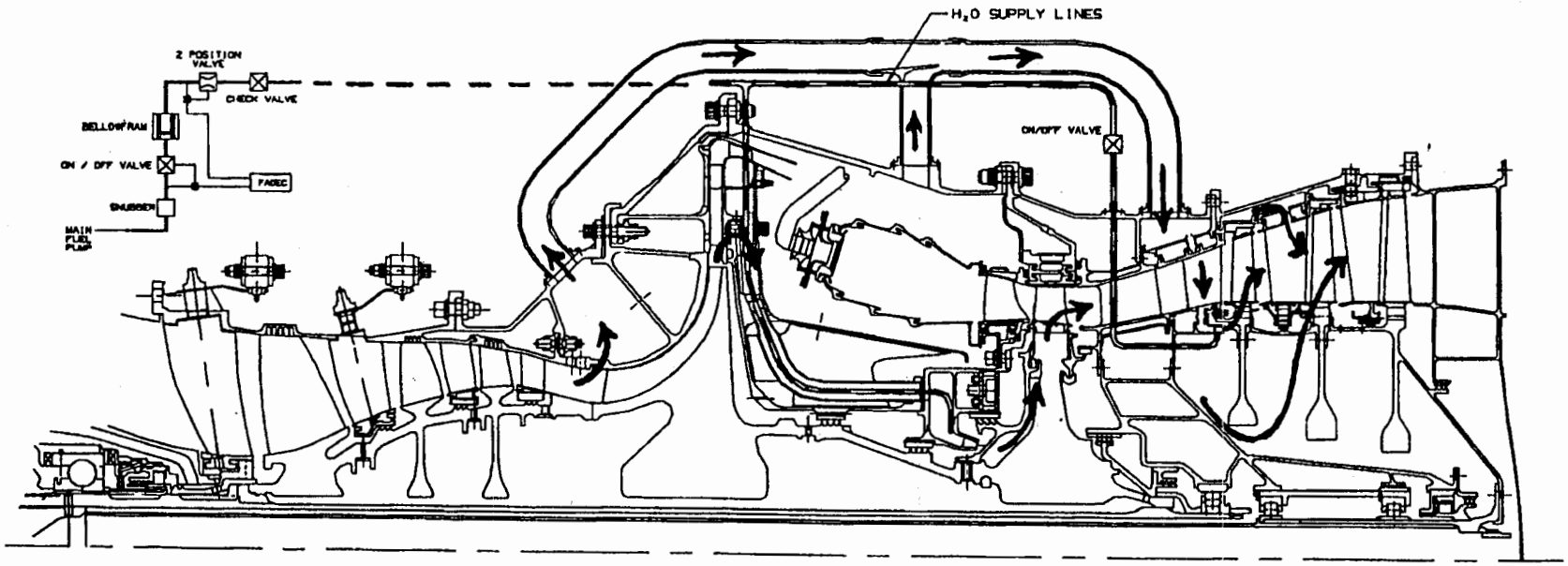

- Cooling Sized For Normal Mission, Water Injected For Contingency.
  - Power turbine cooled as in other concepts.
  - Allows 620°F higher TIT than baseline, and better mission SFC.
  - Water & injection hardware is small percentage of engine weight.

Figure 8. Water Injected Turbine Cooling Engine

the normal mission for improved SFC. The degree to which cooling flow can be modulated is limited by impact on cooling effectiveness and potential for hot gas backflow into the cooling system.

The **Water Injected Turbine Cooling** concept (Figure 8) takes a somewhat different approach to meeting the disparate cooling flow requirements between contingency and normal operation. Cooling passages and restrictions are sized to provide adequate cooling flow for normal mission operation. During contingency, water is injected into the cooling system to augment cooling and allow higher operating temperatures. Evaporative cooling causes the cooling air temperature to drop, increasing density and therefore airflow. This provides a small amount of passive cooling flow modulation as well as lower cooling temperatures. A water supply must be carried on board sufficient to provide two uses of the 30 second contingency power rating (takeoff and landing), with some margin.

Mechanical Evaluation and Lifing Methodology

The components of each engine were designed to meet both the mission and contingency requirements. The components have different failure modes and restraints which require evaluation. Table 6 lists the sizing criteria for the various components throughout the engine. These criteria largely determine component design and configuration. Hot section parts are designed to a15,000 hour bulletin life.

Table 6. Component Sizing Criteria

Part	Failure Mode	Comment
Blades	Net Section Yielding	Sets cooling and material required for contingency on LPT blades. Limit set at 80% of 0.2% Tensile Yield Strength
	TBC Bond Coat Failure	Sets cooling required for contingency on HPT blade. Bond coat limit set at 2150 F.
	Incipient Melting	Sets cooling required for contingency for the HPT blade trailing edge which is partially uncoated. Bare surfaces limited to 2200° F for short duration events.
	Oxidation	Not a factor for typical rotorcraft TS due to cooler mission temperatures and short duration of contingency events.
	Creep Rupture	Sets cooling and material required for mission of 15,000 hours. OEI event damage included in roll-up.
HPT Disk	LCF Life	20,000 hr mission requirement. Contingency does not impact life.
	Dovetail Creep	Not a problem due to low time at contingency.
	Overspeed	Since cooling temperature and speed do not increase significantly over mission, this is not a problem at contingency
Nozzles	TBC and Oxidation Limits	Same limits as blades
	Creep, LCF and Vibratory Stress	These are all factors which determine nozzle cooling and material selection. GEAE data base of nozzle materials and operating temperatures used to assess acceptable design.
LP Shaft	Tensile Failure	75 ksi limit for 2 min OEI
HPT Shrouds	TBC Bond Coat Failure	Cooling requirements determined at hottest mission point. Not a problem at contingency due to duration.

The most critical components in each configuration are the HPT and LPT airfoils. These components contribute the most to cost and can have the largest impact on performance. The lifing calculations performed were simplified to allow for rapid evaluation of a wide variety of configurations. One dimensional calculations were used to scale the more detailed cooling, stress, and life analyses of known designs. For each configuration, various airfoil materials and cooling configurations were evaluated for both mission and contingency operation. Each configuration was defined to provide the best trade of cost and performance. For example, DOC savings were realized by substituting additional cooling flow for less temperature capable (and cheaper) materials in some components.

In contingency power operation, net section yielding is the potential failure mode for airfoils. Creep life is not a limiting factor in the contingency power certification test. Airfoils were evaluated for short duration failure mechanisms at the 30 second contingency rating. These evaluations were performed at redline temperature (T41 average + 150°F) and speed (Ncore average + 2.4%), and include overtemperature and overspeed capability. Surface temperature was maintained to avoid thermal barrier coating (TBC) bond coat (ceramic) disbonding, surface oxidation, and surface metal incipient melting. These limits were set assuming a one minute exposure to the environment (two 30 second rating usages) per emergency event. Net section yielding was calculated as a function of average airfoil radial stress (Savg), and bulk temperature (Tbulk). Bulk temperature, which is the average temperature of a cross-section, was used to calculate the material's net section strength. The average cross-sectional stress in any airfoil was limited to 80% of the material's ultimate tensile strength (UTS) for safety.

In normal mission operation, creep life largely determines the lifespan of airfoils. The mission life analysis was broken down into its major segments, and one complete OEI event is included in the life analysis. Mission life analysis was performed with a 2/3 deteriorated engine temperature (T41 average +100°F). Creep damage was calculated for each segment of the entire mission, including the contingency event, using the Larson-Miller Parameter (LMP):

$$N = 10^{[LMP / (Tbulk + 460) - K]}$$

where N is the calculated life at any condition, K is a material constant, and Tbulk is the average or bulk temperature. LMP is an empirical parameter which is a function of stress:

$$LMP = f(Savg, Material)$$

The percentage of life consumed in any one mission segment is merely the ratio of time spent divided by the required mission life, N. A sample calculation of the blade temperature, stress, and creep life for the entire mission is summarized in Table 7.

Once the surface and bulk temperature requirements were determined, the cooling configuration was selected and flow levels were calculated. Cooling flows were scaled from known turbine designs through the use of cooling technology curves. These technology curves, derived from various GEAE designs, plot cooling effectiveness (Eff.) against airflow for different cooling configurations:

$$Eff. = f(Cooling\ Flow, Cooling\ Configuration)$$

The cooling effectiveness and material property curves are both GEAE proprietary technology.

Table 7. Baseline Engine - HPT Blade Mission Life Consumption

Certification Mission	T3	T41	Lead Edge Temp	Tbulk	Trail Edge Temp	Mission Mix %	Time (hrs)	Creep Life Consumed	Avg Stress	% of UTS
30 SEC OEI	1058	2860	2094	1941	2193	0.04%	0.06	1.87%	32.4	79.7%*
2 MIN OEI	1024	2754	2019	1872	2114	0.18%	0.27	1.57%	31.3	61.2%
CONTINUOUS	906	2390	1759	1633	1841	99.78%	151.70	1.75%	28.0	
							152.03	5.19%		
Actual Mission	**T3**	**T41**	**Tl.e.**	**Tbulk**	**Tte**	**Mission Mix %**	**Time (hrs)**	**Bulletin Life Consumed**		
T/O Hover, ISA	771	2131	1478	1437	1628	0.5%	75	0.00%		
T/O Hover, ISA +30 F	839	2259	1577	1535	1734	0.5&	75	0.04%		
Conversion, ISA	813	2218	1544	1501	1698	1.6%	240	0.04%		
Conversion, ISA +30 F	873	2320	1625	1582	1785	1.6%	240	0.55%		
Climb, ISA	771	2210	1519	1476	1678	8.5%	1275	0.07%		
Climb, ISA +30 F	840	2338	1619	1574	1784	8.5%	1275	2.05%		
Cruise, ISA	742	2160	1479	1437	1635	13.5%	2025	0.03%		
Cruise, ISA +30 F	815	2298	1586	1542	1749	13.5%	2025	1.15%		
Conversion	813	2218	1544	1501	1698	1.6%	240	0.04%		
Conversion +30 F	873	2320	1625	1582	1785	1.6%	240	0.55%		
Landing	771	2131	1478	1437	1628	0.5%	75	0.00%		
Landing +30 F	839	2259	1577	1535	1734	0.5%	75	0.04%		
Descent & other**	-	-	-	-	-	47.6%	7140	0.00%		
						total hrs	15000	4.54%***		

Notes: Assumes 1995/1999 properties for ultimate tensile strength
* Baseline HPT Blade cooling is sized by UTS at the 30 Sec OEI rating
** Other includes cold day and low power
*** Mission operation only consumes 4.54% of 15,000 hour bulletin life goal. HPT blade cooling is far more than needed for normal operation.

Blade and vane skin and bulk metal temperatures were calculated using skin and bulk cooling effectiveness combined with gas path and cooling air temperature:

$$Tmetal = Tgas - Eff * (Tgas - Tcoolant)$$

where Tmetal is the skin or bulk temperature, Tgas is the hot gas temperature, Tcoolant is the temperature of the coolant, and Eff is the cooling effectiveness. Once the cycle is determined, the resultant gas path and coolant temperatures are used to calculate cooling flow.

Purge flows and leakage levels were set based on GE design experience. Secondary flows were also modeled using the GE proprietary secondary airflow program, YFT. Modeling was necessary to determine the impact of both water injection and flow modulation on the flow circuit.

Once required cooling and purge flows levels were established, the engine cycle was calculated. The selected engine concepts were strongly affected by secondary and cooling flow distribution, as the cycle temperature and component performance were the same for these engines. The process of establishing the best configurations required iterating the cooling flow and cycle parameters. Cooling flow changes alter the cycle, affecting power turbine hot gaspath temperatures, and therefore cooling requirements. The cycle and cooling flow levels were updated iteratively until a consistent design was achieved.

Baseline Engine - Detailed Definition and Mechanical Evaluation

Power turbine airfoils are uncooled in conventional turboshafts. This is due in large part to the complexity of the cooling delivery system which requires additional seals and features to direct the cooling efficiently. Adding cooling to several turbine stages can also significantly increase engine cost. By agreement with NASA, the baseline engine was defined to represent the best conventional configuration, utilizing the same level of materials technology as the unique engine concepts. To maintain a conventional configuration, the baseline engine T41 was limited so that the 1st stage blade of the power turbine would not require cooling to survive the 30 second contingency power rating. T45 was limited to 1968° F to meet this criteria, resulting in a T41 of 2860° F. The HPT airfoils were not a limiting factor since cooling flow can be adjusted to meet life.

The centrifugal compressor in these engine concepts does more of the compression work than in current production engines. This presented a problem in extracting cooling air from the compressor for power turbine purge and cooling. Cooling air is typically extracted between compressor stages, selecting a stage with just enough pressure to supply the intended circuit. In advanced axi-centrifugal configurations, however, the axial compressor discharge pressure is too low to cool the power turbine, and the centrifugal compressor discharge pressure is much higher than needed. A cooling air ejector system was defined to mix the high and low pressure air sources to minimize the compressor work needed to provide power turbine cooling. An alternative approach would be to extract air midway through the centrifugal compressor. The mixing ejector concept works better in this application.

Table 8 lists the material and cooling configuration of the airfoils throughout the baseline engine's high and low pressure turbines. The only the 1st stage LPT nozzle is cooled. This air is used to purge the turbine inner wheelspaces. A fourth generation mono-crystal material was used for the 1st stage LPT blade to allow for the highest possible LPT inlet temperature without cooling. It was found that the best mono-crystal materials offer relatively small improvements in short term capability over some less expensive materials. The developers of most advanced materials are focusing on enhancing creep life (for greater mission life) and not on extreme, short duration capability (contingency). As a result, today's best materials are generally limited by the contingency rating and have excess life in the normal mission operation.

Table 8. - Baseline Configuration - Airfoil Materials And Cooling

	Material	Cooling Configuration
HPT Nozzle	N6	Impingement Insert
HPT Blade	N6	5 Pass Serpentine
LPT Nozzle, Stg. 1	R142	Single Pass
LPT Blade, Stg. 1	N6	Solid
LPT Nozzle, Stg. 2	R142	Solid
LPT Blade, Stg. 2	R80, Eq.	Solid
LPT Nozzle, Stg. 3	R80, Eq.	Solid
LPT Blade, Stg. 3	R80, Eq.	Solid

Table 9 lists percentage of blade life consumed during 15,000 hours of normal mission operation (the bulletin life goal for this study). It also give the percentage of ultimate tensile strength reached during the contingency rating certification test. Clearly, the baseline was sized only by the contingency power requirement, with the Stage 1 HPT blade reaching safety

limit of 80% of its ultimate tensile strength. In each stage, the OEI event was the more limiting factor, while less than 10% of the blade life would be consumed during 15000 hours of normal operation. In practice, this excess life capability cannot be utilized as the blades would be replaced for other reasons, such as foreign object damage, over temperature events, and product obsolescence. This indicated a design that is extremely oversized and overcooled for normal mission operation.

Table 9. Baseline OEI And Mission Margin

	% of UTS Reached During an OEI Event	% of Life Consumed During 15000 hrs of Normal Mission Operation
HPT Stage 1 Blade	**80%**	5.9%
LPT Stage 1 Blade	68.8%	9.2%
LPT Stage 2 Blade	74.1%	2.4%
LPT Stage 3 Blade	39.7%	~0%

Cooled Power Turbine Throttle Push - Detailed Definition and Mechanical Evaluation

In this engine concept, the first two stages of the power turbine are cooled to allow T41 to be significantly increased. To accommodate the cooling air to the power turbine blades, boltless cooling plates were added to the first and second stage disks. Air is delivered through the PT accelerator and enters through bayonet holes between the disk and the forward cooling plates. The power turbine first stage disk material was upgraded to R88DT to handle the increased rim temperatures of the higher cycle. Table10 summarizes the turbine disk materials for the selected concepts.

Table 10. Disk Materials

	Baseline	Concept Designs
HPT Stage 1 Disk	R88DT	R88DT
LPT Stage 1 Disk	R95	R88DT
LPT Stage 2 Disk	R95	R95
LPT Stage 3 Disk	R95	R95

Cooling the first and second stage of the power turbine (and increasing HPT cooling) allows the engine to be sized 620°F higher T41 than the baseline engine at the 30 second contingency power rating. This resulted in a 28% reduction in the engine airflow (and core size) required to meet the hover, OEI requirement versus the baseline. Normal mission operating temperatures are approximately 500°F higher than the baseline engine, and all components exceed commercial life goals. In spite of 6% additional cooling flow, the increase in thermal efficiency due to higher cycle temperatures results in a 2.5% reduction in mission average SFC. The cooling flow levels of Cooled Power Turbine Throttle Push Concept were set by the contingency power certification test, and are higher than needed to meet normal mission life requirements. Some components are cooled to survive the contingency rating that would not require any cooling during normal mission operation.

Table 11 provides a summary of the material and cooling configurations within the turbine. Consistent with study ground rules, the HPT airfoil materials were limited to 4th generation mono-crystal. Cooling the first and second stage power turbine blades and vanes allowed the substitution of less expensive materials than the baseline engine. These blades each have a three pass serpentine configuration with trailing edge cooling. Gas temperatures are low enough in the third power turbine stage to allow uncooled airfoils due to the amount of work extracted in the first two stages.

Table 11. Airfoil Materials And Cooling For Selected Engine Concepts

Component	Material	Cooling Config.
HPT Nozzle	N6	Impingement Insert
HPT Blade	N6	5 Pass Serpentine
LPT Nozzle, Stg. 1	R142	3 Pass Serpentine
LPT Blade, Stg. 1	R142	3 Pass Serpentine
LPT Nozzle, Stg. 2	R125	3 Pass Serpentine
LPT Blade, Stg. 2	R125	3 Pass Serpentine
LPT Nozzle, Stg. 3	R80, Eq.	Solid
LPT Blade, Stg. 3	R80, Eq.	Solid

Table 12 summarizes the percentage of the ultimate tensile strength reached during contingency certification, and the percentage of the goal life consumed during normal mission operation. Similar to the baseline engine, there is excess mission life in some stages which cannot be utilized. During contingency, some blade rows also did not reach the bulk UTS limit (80% of yield strength) due to minimum cooling requirements for the trailing edge skin. It is clear that while there is excess mission life in the Cooled PT Throttle Push concept, it is far less oversized than the baseline engine for normal mission operation.

Table 12. Selected Concepts Life Summary

	Cooled PT Throttle Push		Modulated Cooling		Water Injected Cooling	
Blade	% UTS Reached During OEI	% Life Used in Missions	% UTS Reached During OEI	% Life Used in Missions	% UTS Reached During OEI	% Life Used in Missions
HPT Stg 1	71.2%	2.9%	71.1%	99.2%	74.1%	23.5%*
LPT Stg 1	**79.9%**	45.6%	**79.8%**	**100.0%**	72.3%	88.1%
LPT Stg 2	76.0%	**100.1**	**80.0%**	**100.0%**	74.4%	**99.9%**
LPT Stg 3	56.3%	19.4%	56.2%	7.4%	60.7%	17.3%

*Water injection cooling was sized with no cooling augmentation required for the 2 minute contingency rating

Modulated Turbine Cooling - Detailed Definition and Mechanical Evaluation

The Modulated Turbine Cooling concept is similar to the Throttle Push Concept in that T41 is increased and the power turbine is cooled. However, with the cooling modulation concept, cooling air to both the HPT and LPT is modulated so that the cooling flow level can be reduced for better SFC during normal mission operation, and increased for the high temperature OEI rating.

During normal operation, blade.cooling, leakage, and wheelspace purge flow is supplied through the primary accelerator. This flow is set to a sufficient level for wheelspace cavity purge and blade cooling. During an OEI event, additional cooling air is supplied to the blades through a secondary accelerator. Figure 9 illustrates the double accelerator design.

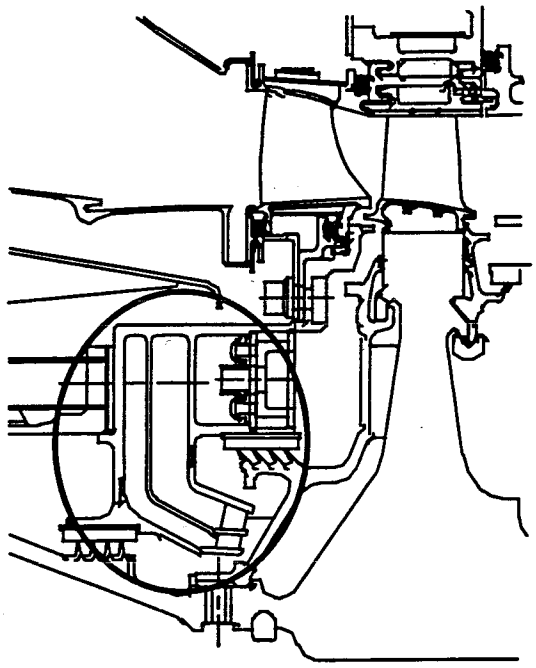

Figure 9. Modulated Turbine Cooling HPT Double Accelerator

Modulated Turbine Cooling concept essentially achieves the goal of "dual sizing" an engine for contingency and mission life. Through modulation, cooling to the HPT and first two power turbine stages is adjusted to the minimum needed to meet the mission and OEI life requirements. Table 12 shows that both the contingency and mission almost fully utilize the material capabilities of these turbine stages. Stage 3 power turbine temperatures are so low that they do not consume much mission or contingency life.

Table 13 shows the ratio of augmented versus normal cooling flow in the HP and power turbines. The change in cooling flow is dependent upon the initial pressure ratio of the circuit. An orifice with a small initial pressure drop will be much more sensitive to a pressure change than an orifice which is choked. The analysis shows that in the HPT blade supply circuit, the seal pressure drops are almost equivalent to the blade pressure drop, yielding a similar modulation ratio. The PT seals however, are running at a lower pressure drop, therefore, the flow increases disproportionately to the blade flow increase. In sizing the cooling flow for the contingency rating, the increase in leakage and purge flow must be accounted for.

Table 13. Summary Of Cooling Flow Modulation

Component	Modulation Ratio
HPT Blade (N6)	1.33
HPT OBP and IBP Seals	1.35
LPT Stg 1 Blade (R142)	1.32
LPT OBP Seal	1.51
LPT Stg 2 Blade (R125)	1.38
Overall Cooling	1.16

Certain practical constraints arose when defining this concept. Film and convection cooling can only be optimized for one operating mode. If pressure is increased excessively during contingency, the cooling film could blow off the surface resulting in cooling effectiveness. If flow and internal pressure are reduced too far, hot gas could backflow into the cooling cavities, with catastrophic results. Therefore, the degree to which cooling can be modulated is limited by the hot gas ingestion in normal operation and film cooling effectiveness during OEI.

The cost, weight, and complexity of modulating each cooling and purge circuit must be justified by reductions in SFC that improve DOC. The modulation scheme chosen allows regulation of cooling flow at several location using one control valve. Added control complexity is minimal. The system failure mode is in the open (contingency cooling) position for safety. Periodic inspections could be eliminated by designing the system to self test and alert in case of failure. The system adds no significant maintenance. T41 and cooling flow at the contingency rating are similar to the Throttle Push concept, resulting in similar engine size. During normal mission operation, SFC was improved more than an additional percentage point beyond the Throttle Push concept. Added cost and weight were minimal.

Water Injected Turbine Cooling - Detailed Definition and Mechanical Evaluation

This concept uses water to augment cooling during contingency power. Water injection enhances turbine cooling several ways. Cooling air temperature is reduced due to the evaporative cooling effect and lower temperature of the water. The reduced temperature increases the density of the cooling mixture providing some passive modulation by allowing more air to flow though the cooling passages. In addition, the higher specific heat of water provides an increase in the heat capacity of the cooling mixture. This combination of effects allows for a reduction in the amount of cooling flow required during contingency. Consequently, core size is somewhat smaller the other selected concepts.

Various water storage and injection configurations were examined. Several methods could be used to provide quick and reliable water injection. The amount of water required to produce the desired is only a few percent of the cooling mass flow. Due to the very short duration of the emergency event, the required water supply is small, even with a 25% margin (Table 14). The weight of the water, tank, and injection hardware is approximately 36 pounds, including 14 pounds of water. Added control complexity is minimal. System self monitoring would be limited to checking water level in the tank and alerting in case of a leak. Periodic system inspections would be needed to insure safety, but they could be performed during scheduled maintenance and would add little time or cost.

Table 14. Water Consumed During an OEI Event

	Cooling Air Temperature Reduction	Water Required for 1 Minute (2 * 30 sec rating)
HPT Blade	101° F	8.4 lb.
PT Blade	134° F	5.8 lb.
Total		14.2 lb.

Table 12 shows the percentage of ultimate tensile strength reached during OEI and the percentage of mission life consumed. Dual sizing in each turbine stage did not yield maximum economic benefit in this concept. During initial cooling sizing, the HPT stage 1 blade was sized by UTS at the OEI rating. At this cooling level, however, water injection was needed to survive the 2 minute contingency power rating as well. (2 minute rating = 90% power of 30 second rating.) The weight of carrying a 5 minute water supply (2 uses each of the 30 sec and 2 min ratings) was traded against simply increasing turbine cooling flow so that water injection was only needed during the 30 second rating (a 1 minute water supply). The later cooling scheme yielded a bigger improvement in DOC. The stage 1 and 2 power turbine airfoils were close to being dual sized.

Total cooling flow at contingency is somewhat lower than the other selected concepts, resulting in a slightly smaller engine at the same T41. The added weight and complexity of the water injection system, however, results in an engine that is heavier and more expensive than the other two selected concepts. Mission SFC is better than the Throttle Push, but not as good as the Modulated Cooling concept.

Thermal shock is an area of concern with water injection into hot section cooling. Care must be taken to insure the water is completely evaporated before it comes into contact with any hot section parts. Even with complete evaporation, the thermal gradients in this concept are even higher than the very high levels of the other selected concepts.

Life Consumption During an Emergency Event

For safety, all engine components must have sufficient residual life to complete the full mission and land after a takeoff OEI event. To insure safe operation at the end of an engine's design life, the engines were sized to meet the 15000 hour mission life plus a complete field OEI event. Table 15 provides the estimated consumption of equivalent mission life of an OEI event for each concept using the Larson-Miller Parameter. The estimated life consumed is relatively small for all concepts. These values imply that several contingency events could be handled without replacement. The problem in applying standard lifing approach is that it is unclear how a short duration event impacts long term capabilities such as creep. There is a significant degree of uncertainty to these numbers and to the extent of damage caused by an OEI event. An improved methodology for calculating short duration/high temperature life consumption would be extremely beneficial for these applications.

Table 15. Equivalent Hours Of Mission Life Consumption Per OEI Event

	HPT stg 1	LPT stg 1	LPT stg 2	LPT stg 3
Baseline	71 hrs	212 hrs	17 hrs	~0 hrs
Throttle Push	37 hrs	469 hrs	1116 hrs	238 hrs
Modulated Cooling	37 hrs	464 hrs	1448 hrs	238 hrs
Water Injection	53 hrs	471 hrs	872 hrs	343 hrs

Economic and Safety Evaluation of Selected Engine Concepts

The selected engine concepts were evaluated versus the baseline engine for impact on aircraft economics. Safety, potential for certification, and aircraft installation were also key criteria. Table 16. summarizes key engine performance, cost, and installation parameters for each concept. In this comparison, the engines were all sized to meet the same hover, OEI contingency power requirement (8448hp @ 2K/ISA+20°C). NASA specified the comparison be tabulated at equal power to make the differences in engine characteristics clearer. This approach somewhat underestimates the full benefit of these concepts, as reductions in engine weight and fuel burn result in reduced aircraft weight and power requirements.

It is clear that the higher operating temperatures of the selected engine concepts yield dramatic improvements in engine performance and installability. The cooling enhancement features allow a contingency rating 620°F higher than the baseline engine. At this temperature, about 28% less airflow is needed to produce the required contingency power. Engine weights are reduced approximately 30% compared to the baseline engine. Mission weighted SFC is improved from 2.5% to 3.6%. Key installation dimensions are about 15% smaller, resulting in an almost 40% reduction in installation volume.

These engine concepts all contain two turbine stages of cooled blades and vanes that are uncooled in the baseline engine. They also contain other unique cooling hardware that would tend to add expense. However, because the engines are nearly 30% smaller than the baseline, engine acquisition cost is reduced by 8% to 10%. Since major components are designed to meet the same life goals, and the unique components add little maintenance, maintenance costs are nearly identical to the baseline engine. The reductions in engine weight, SFC, and acquisition cost afforded by these enhancing technologies produce substantial reduction in aircraft operating costs. The selected concepts showed approximately 3% to 4% improvement in aircraft operating costs versus the baseline using the NASA Ames and GEAE DOC models. The Modulated Cooling concept produced the biggest improvement with both DOC models, followed by the Cooled Power Turbine Throttle Push and Water Injected Cooling concepts. Assuming a typical 5% profit margin, a 3% reduction in DOC translates into a 60% increase in operating profits. Even with an optimistic assumption of 10% profit margin, a 3% reduction in operating costs would yield 30% higher operating profits than the baseline engine. These are dramatic improvements in operating profits.

Table 16. Contingency Power Study: DOC Evaluation
Engine Concepts Sized to Meet Baseline Aircraft Propulsion Requirements

Engine Concept	Baseline (Uncooled PT)	Cooled PT Throttle Push	Modulated Cooling	Water Injected Cooling
W2R (Nominal, lb/s)	36.6	26.3	26.3	26.1
Redline T41 @ 30sec OEI	2860 °F	3480 °F	3480 °F	3480 °F
Cruise T41 (average engine)	2060 °F	2560 °F	2500 °F	2550 °F
W cool (Wcharge/W2R)	9.6%	15.3%	15.3% / 13.2% *	14.9% / 14.3% *
Engine Weight (lb)	1370	958	960	969
Diameter (in)	32	27.1	27.1	27
Length (in)	45.8	39.5	39.5	39.4
Acquisition Cost	$1.12 M	$1.0 M	$1.01 M	$1.03 M
Δ Weight	Base	-30%	-29.9%	-29.3%
Δ SFC (mission weighted)	Base	-2.5%	-3.6%	-2.9%
Δ Acquisition Cost	Base	-10.3%	-9.5%	-8.2%
Δ Maintenance Cost	Base	0.0%	0.0%	+0.1%
Δ DOC (GEAE, CPR=1.29)	**Base**	**-3.8%**	**-4.0%**	**-3.6%**
Δ DOC (AMES, CPR=1.40)	**Base**	**-2.9%**	**-3.0%**	**-2.7%**

* Total chargeable cooling for Contingency/Mission

Safety and potential for certification were also key evaluation criteria. All concepts should be as reliable and safe as the baseline engine in normal operation. The selected concepts are sized by the same material temperature criteria during contingency as the baseline, so the higher cycle temperatures should not impact safety. There should be no barrier to certification for any of the selected concepts.

The only safety distinction that can be made between these engine concepts is in the event of a double failure. A double failure is the rare case in which an engine fails and the contingency power enhancement mechanism on the remaining engine fails. There is no FAA requirement to eliminate the possibility of a double failure, only a requirement to demonstrate that the backup system is reliable. However, safeguards against a double failure are viewed as highly desirable by both airframers and airlines. The Cooled Power Turbine Throttle Push concept's contingency power capability is designed into the engine sizing, and has no special mechanisms which must be activated during an emergency. Since the contingency power enhancement is passive, there is no mechanism to fail. The Modulated Cooling Flow Concept has a modulation valve, but it can be designed to fail in the open mode so it will provide

contingency power capability. The only negative impact of this failure mode is an increase in fuel consumption on that engine for the remainder of that mission. Additionally, the cooling modulation system could self test before each takeoff by cycling and sensing the additional cooling flow. The pilot would be warned of a malfunction in the contingency power system *before* takeoff. The double failure scenario for the Water Injected Cooling concept is not as favorable. If the system fails to inject water, the engine may not survive a contingency event. If the system fails in the open (injection) mode on takeoff, then the water tank will drain until empty, leaving no water for a contingency power landing. This system could not be designed to fully self test the water injection system before each takeoff without requiring frequent maintenance to add water.

Other Applications of Selected Technologies

Civil tiltrotors are not the only applications with requirements for significant levels of contingency power. The power required to survive a one engine inoperative event during takeoff sizes the propulsion system in most vertical lift aircraft. This is true of helicopters and vectored thrust aircraft, in both civil or military applications. Aircraft companies realize the potential savings of engines designed to provide short duration emergency power, and now frequently request high contingency power ratings. The contingency power enhancing features defined here could also be used to boost the contingency rating in turbofan or convertible engines. The features which improve short duration temperature capability could also be used in conjunction with almost any other contingency enhancing concept to provide further augmentation. The technologies identified here have potential for dramatically improving the economics of a wide variety of vertical lift aircraft, and will be utilized as soon as they are fully developed.

Conclusions

The selected engine concepts have potential to dramatically reduce aircraft operating costs for civil rotorcraft applications. The level of cost reduction is similar for all three unique concepts. The Modulated Cooling and Cooled Power Turbine Throttle Push concepts do have an advantage over Water Injected Cooling concept in that they have double failure operability and do not require the aircraft to carry an additional fluid. GEAE believes that this makes the Modulated Cooling and Throttle Push concepts more attractive to the civil rotorcraft industry and more worthy of further development.

CRITICAL TECHNOLOGIES AND DEVELOPMENT NEEDS

One of the side effects of modulating cooling is the consequential increase in leakage flow. Through judicious placement of the modulation, the leakage was minimized. However, 20% of the modulated flow is leakage flow. Through seal technology improvements, this percentage can be reduced. Ideally, the seals would completely seal off leakage and dedicated purge flow would be delivered which is not affected by the increase in pressure caused during modulation. In this study, the HPT nozzle and 2nd stage LPT nozzle flow were not modulated. Developing effective flow delivery system and sealing for these components may provide opportunities for further improvements.

Due to the need to distribute cooling along the trailing edge of airfoils, there is a minimum flow that is acceptable. Through the development of smaller hole size capability, this restriction on cooling flow can be expanded.

The current study assumed no degradation of cooling effectiveness caused by the increase in increase pressure ratio across airfoil film holes. Film designs that are insensitive to higher pressure drops are required to make modulated cooling possible in a highly film cooled airfoil.

With the newer commercial rating for a 30 second OEI event, designs can be pushed into regimes not previously considered or understood. It is evident that the assumptions used to assess short term capability can greatly influence the outcome of the study; It causes uncertainty in what assumptions to use for short term sizing. The impact of a short term event on long term mission capability is also not clearly understood. It also makes difficult the disposition evaluation of hardware after an event. A basic understanding of short term capabilities will enable us to better understand the potential of the throttle push and modulated cooling concepts. This understanding may also reveal potential for rerating of current production engines to higher power levels, better matching the requirements of the civil tilt rotor application.

Another restriction at contingency is the capability of TBC coatings. For highly cooled designs that have large thermal gradients, the skin temperature will be significantly higher than the bulk temperature. In these circumstances, the skin or bond coat temperature sizes the cooling at contingency.

Through the development of reliable, light weight modulation equipment, more flexibility in the modulation scheme can be realized, resulting in further optimizing. By having additional valves, additional circuits can be manipulated to size cooling based on the individual component needs.

Clearly the higher temperature designs provide better specific power and improved thermodynamics. This requires cooling to the LPT as was used for the three concept designs. Unfortunately, this air is the most costly since it totally avoids the gas generator turbine. LPT cooling delivery systems are more complex given the longer distance from the compressor bleed. With the emergence of cooled power turbines in turboshaft engines, basic design work on the associated cooling delivery and mechanical systems is required.

Through the evaluation of different materials for each of the concepts, it became evident that certain materials capabilities had a better mix of capabilities than others. For turboshaft applications such as the tilt rotor application, there is a much higher relative demand at the contingency power point. Unfortunately, advanced materials have been optimized for the mission capability and do not weight the short term properties such as tensile strength as highly. There is an opportunity to investigate how a single crystal material could be altered to better balance short term yield strength and long term creep capability.

Appendix A: Sample Aircraft Sizing and DOC Sensitivities

SHCT - Sizing for OEI Contingency Power Study

Aircraft Weight & Geometry 600 nmi Sizing Mission		**Revised Baseline**	**BASE**	**Plus 10% Pwr/Weight**	**-5% SFC**	**-10% Eng Maint**	**-10% Eng Acq'n $**
Disc Loading	psf	**25**	25	25	25	25	25
Power Loading	lb/rhp	**5.695**	5.695	5.695	5.695	5.695	5.695
Wing Loading	lb/sq ft	**125**	125	125	125	125	125
TOGW	lb	**40800**	41182	40824	40701	Same as Base	
Eng Scale, OEI Hover (2K/ISA+20C)		**1.0557**	1.0952	1.0861	1.083		
SHP Req'd for Hover (2K/ISA+20C)	shp	**8446**	8520	8450	8426		
Cr SHP Req'd (25K/350 ktas/ISA)	shp per eng	**3533**	3565	3541	3535		
Total Disc Area	sq ft	**1790**	1807	1791.2	1785.9		
Rotor Radius	ft	**16.88**	16.96	16.88	16.86		
Wing Area	sq ft	**326.4**	329.4	326.6	325.6		
Wing Span	ft	**42.86**	43.02	42.87	42.82		
Wing Chord	ft	**7.62**	7.66	7.62	7.6		
Aspect Ratio		**5.628**	5.617	5.627	5.63		
k		**0.06268**	0.06279	0.06269	0.0627		
Wing Weight	lb	**2271**	2294	2273	2265		
Rotor & Hub Weight	lb	**2557**	2618				
Rotor Only Weight	lb	**1022**	1026				
Engine Weight	lb	**1059**	1018	1022	1013		
Weight Empty	lb	**26347**	26587	26244	26400		
Airframe Weight	lb	**24229**	24551	24200	24374		
at 200 NM:							
Block Fuel	lb	**1438.3**	1487.2	1478.8	1412.2		
Block Time	min	**48.79**	48.78	48.76	48.76		
Economics for 200 mni Mission							
DOC	(¢/ASM)	**19.5409**	19.665	19.5167	19.4869	19.5278	19.4481
DOC	$/Trip	**1563.27**	1573.2	1561.336	1558.952	1562.224	1555.848
A/C Sell Price	$M	**17**	17	16.8021	16.88142	17	16.7
Eng Sell Price	$M	**1.3**	1.5	1.4888	1.48496	1.5	1.35
Derivative	%DOC/% parameter			-0.0754%	-0.1811%	-0.0698%	-0.1103%

REPORT DOCUMENTATION PAGE

Form Approved
OMB No. 0704-0188

Public reporting burden for this collection of information is estimated to average 1 hour per response, including the time for reviewing instructions, searching existing data sources, gathering and maintaining the data needed, and completing and reviewing the collection of information. Send comments regarding this burden estimate or any other aspect of this collection of information, including suggestions for reducing this burden, to Washington Headquarters Services, Directorate for Information Operations and Reports, 1215 Jefferson Davis Highway, Suite 1204, Arlington, VA 22202-4302, and to the Office of Management and Budget, Paperwork Reduction Project (0704-0188), Washington, DC 20503.

1. AGENCY USE ONLY (*Leave blank*)

2. REPORT DATE
May 2004

3. REPORT TYPE AND DATES COVERED
Final Contractor Report

4. TITLE AND SUBTITLE
Contingency Power Study for Short Haul Civil Tiltrotor

5. FUNDING NUMBERS
WBS–22–714–70–00
NAS3–26617, Task Order 48

6. AUTHOR(S)
Martin M. D'Angelo

7. PERFORMING ORGANIZATION NAME(S) AND ADDRESS(ES)
GE Aircraft Engines
1000 Western Avenue
Lynn, Massachusetts 01910

8. PERFORMING ORGANIZATION REPORT NUMBER
E–14571

9. SPONSORING/MONITORING AGENCY NAME(S) AND ADDRESS(ES)
National Aeronautics and Space Administration
Washington, DC 20546–0001

10. SPONSORING/MONITORING AGENCY REPORT NUMBER
NASA CR—2004-213096

11. SUPPLEMENTARY NOTES
This research was originally published internally as AST025 in November 1998. Project Manager, Joseph D. Eisenberg (retired). Responsible person, Susan M. Johnson, Aeropropulsion Projects Office, NASA Glenn Research Center, organization code 2600, 216–433–2163.

12a. DISTRIBUTION/AVAILABILITY STATEMENT
Unclassified - Unlimited
Subject Category: 07 Distribution: Nonstandard
Available electronically at http://gltrs.grc.nasa.gov
This publication is available from the NASA Center for AeroSpace Information, 301–621–0390.

12b. DISTRIBUTION CODE

13. ABSTRACT ***(Maximum 200 words)***
NASA has concluded from previous studies that the twin engine tiltrotor is the most economical and technologically viable rotorcraft for near-term civil applications. Twin engine civil rotorcraft must be able to hover safely on one engine in an emergency. This emergency power requirement generally results in engines 20 to 50 percent larger than needed for normal engine operation, negatively impacting aircraft economics. This study identifies several contingency power enhancement concepts, and quantifies their potential to reduce aircraft operating costs. Many unique concepts were examined, and the selected concepts are simple, reliable, and have a high potential for near term realization. These engine concepts allow extremely high turbine temperatures during emergency operation by providing cooling to the power turbine and augmenting cooling of both turbines and structural hardware. Direct operating cost are reduced 3 to percent, which could yield a 30 to 80 percent increase in operating profits. The study consists of the definition of an aircraft economics model and a baseline engine, and an engine concept screening study, and a preliminary definition of the selected concepts. The selected concepts are evaluated against the baseline engine, and the critical technologies and development needs are identified, along with applications for this technology.

14. SUBJECT TERMS
Rotorcraft; Tiltrotor; Propulsion; Turbine engine

15. NUMBER OF PAGES
51

16. PRICE CODE

17. SECURITY CLASSIFICATION OF REPORT
Unclassified

18. SECURITY CLASSIFICATION OF THIS PAGE
Unclassified

19. SECURITY CLASSIFICATION OF ABSTRACT
Unclassified

20. LIMITATION OF ABSTRACT