NASA/CR—2004-212879

MTD211A9

RQL Fuel Shifting Sector Rig Test

Daniel A. Haid, Frederick S. Koopman, William O.T. Peschke, and Kenneth S. Siskind
Pratt & Whitney, West Palm Beach, Florida

February 2004

The NASA STI Program Office . . . in Profile

Since its founding, NASA has been dedicated to the advancement of aeronautics and space science. The NASA Scientific and Technical Information (STI) Program Office plays a key part in helping NASA maintain this important role.

The NASA STI Program Office is operated by Langley Research Center, the Lead Center for NASA's scientific and technical information. The NASA STI Program Office provides access to the NASA STI Database, the largest collection of aeronautical and space science STI in the world. The Program Office is also NASA's institutional mechanism for disseminating the results of its research and development activities. These results are published by NASA in the NASA STI Report Series, which includes the following report types:

- TECHNICAL PUBLICATION. Reports of completed research or a major significant phase of research that present the results of NASA programs and include extensive data or theoretical analysis. Includes compilations of significant scientific and technical data and information deemed to be of continuing reference value. NASA's counterpart of peer-reviewed formal professional papers but has less stringent limitations on manuscript length and extent of graphic presentations.

- TECHNICAL MEMORANDUM. Scientific and technical findings that are preliminary or of specialized interest, e.g., quick release reports, working papers, and bibliographies that contain minimal annotation. Does not contain extensive analysis.

- CONTRACTOR REPORT. Scientific and technical findings by NASA-sponsored contractors and grantees.

- CONFERENCE PUBLICATION. Collected papers from scientific and technical conferences, symposia, seminars, or other meetings sponsored or cosponsored by NASA.

- SPECIAL PUBLICATION. Scientific, technical, or historical information from NASA programs, projects, and missions, often concerned with subjects having substantial public interest.

- TECHNICAL TRANSLATION. English-language translations of foreign scientific and technical material pertinent to NASA's mission.

Specialized services that complement the STI Program Office's diverse offerings include creating custom thesauri, building customized databases, organizing and publishing research results . . . even providing videos.

For more information about the NASA STI Program Office, see the following:

- Access the NASA STI Program Home Page at ***http://www.sti.nasa.gov***

- E-mail your question via the Internet to help@sti.nasa.gov

- Fax your question to the NASA Access Help Desk at 301–621–0134

- Telephone the NASA Access Help Desk at 301–621–0390

- Write to:
  NASA Access Help Desk
  NASA Center for AeroSpace Information
  7121 Standard Drive
  Hanover, MD 21076

NASA/CR—2004-212879 MTD211A9

RQL Fuel Shifting Sector Rig Test

Daniel A. Haid, Frederick S. Koopman, William O.T. Peschke, and Kenneth S. Siskind
Pratt & Whitney, West Palm Beach, Florida

Prepared under Contract NAS3–27235

National Aeronautics and
Space Administration

Glenn Research Center

February 2004

Trade names or manufacturers' names are used in this report for identification only. This usage does not constitute an official endorsement, either expressed or implied, by the National Aeronautics and Space Administration.

Note that at the time of research, the NASA Lewis Research Center was undergoing a name change to the NASA John H. Glenn Research Center at Lewis Field. Both names may appear in this report.

Available from

NASA Center for Aerospace Information
7121 Standard Drive
Hanover, MD 21076

National Technical Information Service
5285 Port Royal Road
Springfield, VA 22100

Available electronically at http://gltrs.grc.nasa.gov

RQL Fuel Shifting Sector Rig Test

Daniel A. Haid, Frederick S. Koopman,
William O.T. Peschke, and Kenneth S. Siskind
Pratt & Whitney
West Palm Beach, Florida 33410

Foreword

This report documents the activities conducted under Work Breakdown Structure (WBS) 1.0.2.5 of the NASA Critical Propulsion Components (CPC) Program under Contract NAS3-27235 to evaluate the low emissions potential of a Rich-Quench-Lean (RQL) combustor for use in the High Speed Civil Transport (HSCT) application. The specific intent was to evaluate Fuel Shifting as a combustor control methodology for a multiple bank Rich-Quench-Lean combustor. The use of this control technique was intended to reduce the risk associated with RQL combustors by eliminating the need for a variable geometry mechanism to control combustor airflow while still maintaining low emissions, good performance and operability throughout the operating envelope.

The NASA Subelement Task Manager for this task was Mr. David J. Anderson of NASA Lewis Research Center, Cleveland, Ohio. Dr. Robert P. Lohmann was the Pratt & Whitney IPT Team Leader. Mr. Kenneth Siskind and Mr. John Ols were responsible for the design and analysis of the experimental combustor hardware while Dr. Donald Hautman (UTRC) and Mr. Frederick Koopman (UTRC) were principle investigators for the experimental assessment of the combustor at United Technologies Research Center. Mr. Daniel Haid and Mr. William Peschke (UTRC) were responsible for data reduction of the experimental combustion results. Combustion tests were conducted at the Jet Burner Test Stand of United Technologies Research Center, with particular acknowledgment of the support of Mr. Jimmey L. Grimes.

Table of Contents

FOREWORD **2**

SECTION I - SUMMARY **9**

SECTION II - INTRODUCTION **10**

OBJECTIVES 12

SECTION III - COMBUSTOR TEST FACILITY **13**

LAYOUT 13
AIRFLOW DELIVERY AND HEATING 13
FUEL FLOW 14
WATER FLOWS 14
NITROGEN FLOW 14

SECTION IV - COMBUSTOR HARDWARE DESIGN **15**

RICH ZONE SPOOL PIECE 15
Rich-Quench Modules *15*
Radial-Inflow High-Shear Injector 15
Rich Zone Liner 16
Quench Zone with Reduced-Scale-Quench Technology 16
EXIT TRANSITION ZONE 17

SECTION V - INSTRUMENTATION **18**

FUEL SHIFTING SECTOR RIG 18
Static Pressures *18*
Temperatures *18*
Pre-Diffuser Pressures *18*
EMISSIONS SAMPLING AND ANALYSIS 18
Emissions Sampling System *18*
Emissions Analysis Procedures and Performance Parameters *19*
Fuel/Air Ratio *19*
Emissions Index *20*
Combustion Efficiency *21*
Radial Profile Factor *21*

SECTION VI - COMBUSTOR TEST EVALUATION RESULTS **22**

FUEL SHIFTING SECTOR RIG TEST CHRONOLOGY 22
DISCUSSION OF COMBUSTOR TEST RESULTS 33
Carbon/Oxygen Balance Check *34*
Plenum Fed Configuration *34*
Subsonic Cruise 34
65% Thrust LTO (Climb) 35
34% Thrust LTO (Approach) 36
15% Thrust LTO (Descent) 36
5.8% LTO Thrust (Idle) 37
Diffuser Fed Configuration *37*
34% LTO Thrust (Approach) with Diffuser 38
Subsonic Cruise with Diffuser 38
65% Thrust LTO (Climb) with Diffuser 38
5.8% Thrust LTO (Idle) with Diffuser 38
Integrated LTO Airport Vicinity Emissions *38*
Operability *39*

SECTION VII - CONCLUSIONS **40**

REFERENCES **41**

SECTION II FIGURES **42**

SECTION III FIGURES **47**

SECTION IV FIGURES **50**

SECTION V FIGURES **58**

SECTION VI FIGURES **62**

List of Tables

Table II - 1 Emissions and Performance Goals of HSCT Combustor Minimize Atmospheric Impact ___ *11*

Table VI - 1 Uniform Schedule of Test Points ___ *22*
Table VI - 2 Idle Test Conditions Fuel Shifting Sector Rig Plenum Fed Configuration ___ *23*
Table VI - 3 Descent Non-Shifted Test Conditions Fuel Shifting Sector Rig Plenum Fed Configuration *24*
Table VI - 4 Descent Fuel-Shifted Test Conditions Fuel Shifting Sector Rig Plenum Fed Configuration *25*
Table VI - 5 Approach Non-Shifted Test Conditions Fuel Shifting Sector Rig Plenum Fed Configuration *26*
Table VI - 6 Approach Fuel-Shifted Test Conditions Fuel Shifting Sector Rig Plenum Fed Configuration *27*
Table VI - 7 Subsonic Cruise Non-Shifted Test Conditions Fuel Shifting Sector Rig Plenum Fed Configuration ___ *28*
Table VI - 8 Subsonic Cruise Fuel-Shifting Test Conditions Fuel Shifting Sector Rig Plenum Fed Configuration ___ *29*
Table VI - 9 Climb (De-rated) Test Conditions Fuel Shifting Sector Rig Plenum Fed Configuration ___ *30*
Table VI - 10 Idle Test Conditions Fuel Shifting Sector Rig Diffuser Fed Configuration ___ *31*
Table VI - 11 Approach Test Conditions Fuel Shifting Sector Rig Diffuser Fed Configuration ___ *32*
Table VI - 12 Subsonic Cruise Test Conditions Fuel Shifting Sector Rig Diffuser Fed Configuration ___ *33*
Table VI - 13 Climb (De-rated) Test Conditions Fuel Shifting Sector Rig Diffuser Fed Configuration ___ *33*
Table VI - 14 Integrated LTO Airport Vicinity Emissions ___ *39*

List of Figures

Figure II - 1 Rich-Quench-Lean HSCT Combustor Concept with Reduced Scale Quench and Fuel Shifting Technology 42
Figure II - 2 Rich-Quench-Lean HSCT Combustor 42
Figure II - 3 HSCT MFTF 3770.54 Combustor Operating Envelope (Fuel/Air ratio vs Inlet Temperature) 43
Figure II - 4 HSCT MFTF 3770.54 Combustor Operating Envelope (Inlet Pressure vs Inlet Temperature) 43
Figure II - 5 Rich Zone Stoichiometry for a Fixed Geometry RQL Combustor with Conventional Fuel System (23% rich zone, 72% quench zone, 5% lean zone cooling) 44
Figure II - 6 Front End Flame Temperatures for a Fixed Geometry RQL Combustor with Conventional Fuel System 44
Figure II - 7 Rich Zone Stoichiometry for a Fuel-Shifted Two-Bank RQL Combustor (23% rich zone, 72% quench zone, 5% lean zone cooling; 37%/67% ID/OD bank split) 45
Figure II - 8 Front End Flame Temperatures for a Fuel-Shifted Two-Bank RQL Combustor 45
Figure II - 9 Combustor Exit Temperatures for a Fixed Geometry RQL Combustor with Conventional Fuel System 46
Figure II - 10 Combustor Exit Temperatures for a Fuel-Shifted Two-Bank RQL Combustor 46

Figure III - 1 Fuel Shifting Sector Rig Layout 47
Figure III - 2 Single Passage Rectangular Pre-Diffuser Design to Assess Impact of Diffuser Fed Flowfield on Emissions, Performance and Profiles 48
Figure III - 3 Fuel Shifting Sector Rig Layout with Pre-Diffuser Installed Replacing Flow Straightener 48
Figure III - 4 Fuel Shifting Sector Rig Fuel Delivery System 49

Figure IV - 1 Fuel Shifting Sector Rig Combustor Test Section 50
Figure IV - 2 Rich-Quench Module Cross Section 51
Figure IV - 3 Exploded View of Rich-Quench Module Assembly (Bulkhead Sub-Assembly Not Shown) 51
Figure IV - 4 Rich-Quench Modules Installed in Rich Zone Spool Piece Forward-Looking-Aft View 52
Figure IV - 5 Aft-Looking-Forward View of Rich-Quench Modules and Exit Transition Zone Bulkhead 52
Figure IV - 6 Radial Inflow Swirler/Injector Design 53
Figure IV - 7 Aft-Looking-Forward Isometric View of Convoluted Rich Zone Liner 54
Figure IV - 8 Convoluted Rich Zone Liner Design Left: Aft-Looking-Forward View; Right: Cross Section 54
Figure IV - 9 Forward-Looking-Aft Isometric View of Quench Plate Configuration #15 Showing Quench Air Flowpath in Detail View 55
Figure IV - 10 Quench Plate Configuration #15 Design 55
Figure IV - 11 Lean Zone Spool Piece with Cast Ceramic Liner Forming Exit Transition Zone Converging Trapezoidal Shape Left: Forward-Looking-Aft Isometric View; Right: Aft-Looking-Forward Isometric View 56
Figure IV - 12 Exit Transition Zone Flowpath Definition 56
Figure IV - 13 Exit Transition Zone and Piccolo Probe Emissions System Forward-Looking-Aft Isometric View 57

Figure V - 1 Fuel Shifting Sector Rig Static Pressure (P) and Thermocouple (T) Instrumentation 58
Figure V - 2 Module 1 (& Module 2) Static Pressure (P) and Thermocouple (T) Instrumentation 58
Figure V - 3 Module 1 (& Module 2) Thermocouple Locations on Convoluted Rich Zone Liner Aft-Looking-Forward View 59
Figure V - 4 Pre-Diffuser Pressure Instrumentation 59
Figure V - 5 Piccolo Probe Emissions System for Profile Assessment and 60% OD / 40% ID Ganged Sampling 60
Figure V - 6 Piccolo Probes Installed in Probe Holder 60
Figure V - 7 Emissions Analysis System Schematic 61

Figure VI - 1 Emissions Data Quality at Nominal Subsonic Cruise , 65%, 34%, 15%, 5.8% Thrust LTO Conditions for Builds 2 & 2a 62
Figure VI - 2 NOx Emissions at Nominal Subsonic Cruise Condition for Fuel Shifting Rig Build 2 63
Figure VI - 3 CO Emissions at Nominal Subsonic Cruise Condition for Fuel Shifting Rig Build 2 63
Figure VI - 4 UHC Emissions at Nominal Subsonic Cruise Condition for Fuel Shifting Rig Build 2 64
Figure VI - 5 Efficiency at Nominal Subsonic Cruise Condition for Fuel Shifting Rig Build 2 64
Figure VI - 6 NOx and CO Emissions Profiles for ID Rich Operation at Subsonic Cruise for Fuel Shifting Rig Build 2, f/a=0.019 65
Figure VI - 7 NOx and CO Emissions Profiles for OD Rich Operation at Nominal Subsonic Cruise for Fuel Shifting Rig Build 2, f/a=0.023 66
Figure VI - 8 NOx and CO Emissions Profiles for OD Rich Operation at Nominal Subsonic Cruise for Fuel Shifting Rig Build 2, f/a=0.021 66
Figure VI - 9 NOx as a Function of Inlet Pressure for Estimation of Emissions at 65% Thrust LTO Condition for Fuel Shifting Rig Build 2 67
Figure VI - 10 CO as a Function of Inlet Pressure for Estimation of Emissions at 65% Thrust LTO Condition for Fuel Shifting Rig Build 2 67
Figure VI - 11 UHC as a Function of Inlet Pressure for Estimation of Emissions at 65% Thrust LTO Condition for Fuel Shifting Rig Build 2 68
Figure VI - 12 Estimated NOx Emissions at 65% Thrust LTO Condition for Fuel Shifting Rig Build 2 69
Figure VI - 13 Estimated CO Emissions at 65% Thrust LTO Condition for Fuel Shifting Rig Build 2 69
Figure VI - 14 Estimated UHC Emissions at 65% Thrust LTO Condition for Fuel Shifting Rig Build 2 70
Figure VI - 15 Estimated Efficiency at 65% Thrust LTO Condition for Fuel Shifting Rig Build 2 70
Figure VI - 16 NOx and CO Emissions Profiles for Uniform Operation at 65% Thrust LTO Condition for Fuel Shifting Rig Build 2, f/a=0.026 71
Figure VI - 17 NOx Emissions at 34% Thrust LTO Condition for Fuel Shifting Rig Build 2 72
Figure VI - 18 CO Emissions at 34% Thrust LTO Condition for Fuel Shifting Rig Build 2 72
Figure VI - 19 UHC Emissions at 34% Thrust LTO Condition for Fuel Shifting Rig Build 2 73
Figure VI - 20 Efficiency at 34% Thrust LTO Condition for Fuel Shifting Rig Build 2 73
Figure VI - 21 NOx and CO Emissions Profiles for ID Rich Operation at 34% Thrust LTO Condition for Fuel Shifting Rig Build 2, f/a=0.017 74
Figure VI - 22 NOx and CO Emissions Profiles for OD Rich Operation at 34% Thrust LTO Condition for Fuel Shifting Rig Build 2, f/a=0.022 75
Figure VI - 23 NOx and CO Emissions Profiles for OD Rich Operation at 34% Thrust LTO Condition for Fuel Shifting Rig Build 2, f/a=0.019 75
Figure VI - 24 Maximum Temperature Profile Factor at 34% Thrust LTO Condition for Fuel Shifting Sector Rig Build 2 76
Figure VI - 25 Temperature Profile Factor Over Radial Span at 34% Thrust LTO Condition for Fuel Shifting Rig Build 2 76
Figure VI - 26 NOx Emissions at 15% Thrust LTO Condition for Fuel Shifting Rig Build 2 77
Figure VI - 27 CO Emissions at 15% Thrust LTO Condition for Fuel Shifting Rig Build 2 77
Figure VI - 28 UHC Emissions at 15% Thrust LTO Condition for Fuel Shifting Rig Build 2 78
Figure VI - 29 Efficiency at 15% Thrust LTO Condition for Fuel Shifting Rig Build 2 78
Figure VI - 30 NOx and CO Emissions Profiles for ID Rich Operation at 15% Thrust LTO Condition for Fuel Shifting Rig Build 2, f/a=0.015 79
Figure VI - 31 NOx and CO Emissions Profiles for OD Rich Operation at 15% Thrust LTO Condition for Fuel Shifting Rig Build 2, f/a=0.018 80
Figure VI - 32 NOx and CO Emissions Profiles for OD Rich Operation at 15% Thrust LTO Condition for Fuel Shifting Rig Build 2, f/a=0.016 80
Figure VI - 33 Maximum Temperature Profile Factor at 15% Thrust LTO Condition for Fuel Shifting Rig Build 2 81
Figure VI - 34 Temperature Profile Factor Over Radial Span at 15% Thrust LTO Condition for Fuel Shifting Rig Build 2 81
Figure VI - 35 NOx Emissions at 5.8% Thrust LTO Condition for Fuel Shifting Rig Build 2 82
Figure VI - 36 CO Emissions at 5.8% Thrust LTO Condition for Fuel Shifting Rig Build 2 82
Figure VI - 37 UHC Emissions at 5.8% Thrust LTO Condition for Fuel Shifting Rig Build 2 83
Figure VI - 38 Efficiency at 5.8% Thrust LTO Condition for Fuel Shifting Rig Build 2 83

Figure VI - 39 Total Pressure Profiles Over Pre-diffuser Exit Plane for Fuel Shifting Rig Build 2a ___ 84
Figure VI - 40 NOx Emissions at 34% Thrust LTO Condition for Fuel Shifting Rig Build 2a ___ 85
Figure VI - 41 CO Emissions at 34% Thrust LTO Condition for Fuel Shifting Rig Build 2a ___ 85
Figure VI - 42 UHC Emissions at 34% Thrust LTO Condition for Fuel Shifting Rig Build 2a ___ 86
Figure VI - 43 Efficiency at 34% Thrust LTO Condition for Fuel Shifting Rig Build 2a ___ 86
Figure VI - 44 NOx Emissions Profiles for Uniform and ID Rich Operation at 34% Thrust LTO Condition for Fuel Shifting Rig Build 2a ___ 87
Figure VI - 45 CO Emissions Profiles for Uniform and ID Rich Operation at 34% Thrust LTO Condition for Fuel Shifting Rig Build 2a ___ 87
Figure VI - 46 Temperature Profile Factor Over Radial Span at 34% Thrust LTO Condition for Fuel Shifting Rig Build 2a ___ 88
Figure VI - 47 NO_x Emissions at Subsonic Cruise Condition with Uniform Fuel/Air Ratio for Fuel Shifting Rig Builds 2 & 2a ___ 89
Figure VI - 48 NO_x Emissions at Subsonic Cruise Condition with Shifted Fuel/Air Ratio for Fuel Shifting Rig Builds 2 & 2a ___ 89
Figure VI - 49 CO Emissions at Subsonic Cruise Condition with Uniform Fuel/Air Ratio for Fuel Shifting Rig Builds 2 & 2a ___ 90
Figure VI - 50 CO Emissions at Subsonic Cruise Condition with Shifted Fuel/Air Ratio for Fuel Shifting Rig Builds 2 & 2a ___ 90
Figure VI - 51 Efficiency at Subsonic Cruise Condition with Uniform Fuel/Air Ratio for Fuel Shifting Rig Builds 2 & 2a ___ 91
Figure VI - 52 Efficiency at Subsonic Cruise Condition with Shifted Fuel/Air Ratio for Fuel Shifting Rig Builds 2 & 2a ___ 91
Figure VI - 53 Temperature Profile Factor at Subsonic Cruise Condition for Fuel Shifting Rig Builds 2 & 2a ___ 92
*Figure VI - 54 NO_x Emissions Profiles at Subsonic Cruise Condition for Fuel Shifting Rig Builds 2 & 2a*93
*Figure VI - 55 CO Emissions Profiles at Subsonic Cruise Condition for Fuel Shifting Rig Builds 2 & 2a*93
Figure VI - 56 NO_x Emissions at 65% Thrust LTO Inlet Pressure and Temperature for Fuel Shifting Rig Builds 2 & 2a ___ 94
Figure VI - 57 CO Emissions at 65% Thrust LTO Inlet Pressure and Temperature for Fuel Shifting Rig Builds 2 & 2a ___ 94
Figure VI - 58 Efficiency at 65% Thrust LTO Inlet Pressure and Temperature for Fuel Shifting Rig Builds 2 & 2a ___ 95
Figure VI - 59 NO_x Emissions at 5.8% Thrust LTO Condition for Fuel Shifting Rig Builds 2 & 2a ___ 96
Figure VI - 60 CO Emissions at 5.8% Thrust LTO Condition for Fuel Shifting Rig Builds 2 & 2a ___ 96
Figure VI - 61 Efficiency at 5.8% Thrust LTO Condition for Fuel Shifting Rig Builds 2 & 2a ___ 97
Figure VI - 62 Lean Blowout Equivalence Ratio as a Function of Temperature and Pressure for Fuel Shifting Rig Build 2 ___ 98

Section I - Summary

The low emissions potential of a Rich-Quench-Lean (RQL) combustor for use in the High Speed Civil Transport (HSCT) application was evaluated as part of Work Breakdown Structure (WBS) 1.0.2.5 of the NASA Critical Propulsion Components (CPC) Program under Contract NAS3-27235. Combustion testing was conducted in cell 3 of the Jet Burner Test Stand at United Technologies Research Center. Specifically, Fuel Shifting as an approach to combustor control was evaluated in a multiple bank Rich-Quench-Lean combustor, utilizing reduced scale quench technology implemented in a convoluted liner with quench plate concept. The use of this control technique significantly reduces the risk associated with RQL combustors by eliminating the need for a variable geometry mechanism to control combustor airflow while still maintaining low emissions, good performance and operability throughout the operating envelope.

Through the combustion tests conducted, information on emissions (NO_X, CO, UHC combustion efficiency) was obtained at various key operating conditions, including the airport vicinity conditions (5.8% thrust idle, 15% thrust descent, 34% thrust approach, 65% thrust climb) as well as subsonic cruise. Emissions behavior was assessed as a function of the degree of fuel shifting applied to the combustor to evaluate the overall emissions characteristics as well as radial profile characteristics associated with fuel shifting technology. Data acquired provided insight into the tradeoff that exists between emissions, performance and the combustor exit profile.

Section II - Introduction

Environmental impacts will dictate substantial constraints on the High Speed Civil Transport (HSCT) aircraft that will in turn establish its economic viability. Emissions output, and in particular the oxides of nitrogen generated during supersonic flight in the stratosphere, is especially significant because of their potential for participating in the destruction of ozone at these high altitudes. These concerns lead to the need to severely constrain the output of NO_x from the engines for this aircraft. Comprehensive studies of the dynamics of the upper atmosphere as it influences ozone concentrations are being conducted under the NASA sponsored Atmospheric Effects of Stratospheric Aircraft program (Ref. 1). The initial results from these studies have led to a goal of an emissions index of 5 gm of NO_x/kg fuel at the supersonic cruise flight condition. Since this level is five to eight times lower than that achievable with current engine combustor technology only the most aggressive and advanced low emissions technology can be considered for the power plants for this aircraft. Pratt & Whitney and General Electric are studying two combustor concepts in the NASA-sponsored High Speed Research program to define a burner that achieves this NO_x emissions goal at the supersonic cruise operating condition. Such a burner must also preserve high efficiency, broad operability, and low emissions at all other operating conditions as well as being durable and economically competitive.

The effort at Pratt & Whitney has focused on the Rich-Quench-Lean (RQL) combustor. A conceptual embodiment of this combustor is shown in Figure II - 1 and Figure II - 2. This combustor concept incorporates separated zones of combustion to preserve combustor stability while achieving emission control. The combustion process is initiated in a fuel-rich combustion zone and completed in a fuel-lean combustion zone, with a rapid transition between them. All of the fuel is introduced in the rich zone but with only a fraction of the air required for complete combustion. The rich combustion process provides the combustor stability and, being deficient in oxygen, completes a significant portion of the overall energy release without forming oxides of nitrogen. The combustion products proceed to a quench section where the remainder of the combustion air is introduced in a rapid, intense mixing process. The downstream exit transition zone is used to complete any remaining oxidation of CO to CO_2 and any remaining soot burn-off. Low NO_x emissions will be achieved only if the quench or transition process between the zones is sufficiently vigorous to avoid significant flow residence time near stoichiometric mixture proportions. Sub-scale testing of a single injector or modular version of the RQL combustor at the HSCT engine supersonic cruise operating conditions has demonstrated the low emissions potential of this concept and generated a significant design data base. This effort has been conducted at United Technologies Research Center (UTRC) and was performed as Task 3, HSR Low NO_x Combustor, of NASA Lewis Research Center contract NAS3-25952, Aero-Propulsion Technology Research Program, with Pratt & Whitney of the United Technologies Corporation (Ref. 2).

For the High Speed Civil Transport engine application the aerothermal design point of the Rich-Quench-Lean combustor is the supersonic cruise condition. The results of the evaluations performed in Ref. 2 indicate that the equivalence ratio in the rich zone should be about 2.0. This equivalence ratio is sufficiently high to preclude NO_x emissions at the exit of the rich zone while minimizing the proclivity for smoke formation. To minimize NO_x production in the quench and lean zones, liner cooling airflow to the lean zone is minimized and the remainder of the combustor air enters through the quench air system. Based on an overall fuel/air ratio of 0.030 at nominal supersonic cruise, these considerations lead to a combustor airflow distribution of about 23% in the rich zone, 72% through the quench system and 5% for lean zone liner cooling. It should be noted that the combustor must be designed to operate reliably and with low emissions and good performance throughout the intended design operating envelope. The design operating envelope, for the MFTF 3770.54 engine cycle is shown in the fuel/air ratio vs inlet temperature plot of Figure II - 3 and in the inlet pressure vs inlet temperature plot of Figure II - 4. Figure II - 5 shows the rich zone operating characteristics, on a stoichiometry diagram, for a fixed geometry combustor that incorporates this airflow distribution throughout the operating envelope. Key operating conditions are shown on the graph. This range of "rich zone" equivalence ratios is similar to many gas turbine combustors typically used for subsonic aircraft, implying that a fixed geometry combustor with 22% combustor airflow in the "rich" zone might satisfy the operational requirements of this engine without any need for additional control required.

However, while this airflow distribution is optimized from the point of view of supersonic cruise operation, as the engine is operated at fuel/air ratios less than supersonic cruise, the mixture strength in the rich zone would approach and eventually pass through stoichiometric proportions. Since the highest gas temperatures occur in the products of stoichiometric or near-stoichiometric combustion (Figure II - 6), steady state operation at points in this regime could have adverse effects on the emissions output at some intermediate power levels and on durability of the rich zone liner. This effect is demonstrated graphically on Figure II - 5, where a regime of undesirable steady state operation, labeled "Emissions Limitations", is indicated around stoichiometric proportions. In addition, at the higher inlet temperatures, further restrictions on combustor operation are imposed to provide for "Long-Term Durability" of the rich zone liner. At cooler inlet temperatures, below 650F, liner temperatures can be maintained in an acceptable regime even with the high flame temperatures associated with near-stoichiometric flame temperatures. A final restriction, "Combustion Stability" is imposed to satisfy the operability requirements typical of an aircraft engine. As is evident from the Figure II - 5, fuel shifting control technology is intended to operate primarily to improve emissions and performance at moderate power operating conditions from just above idle power to just below subsonic cruise power. It also must function to avoid liner durability problems at some portions of the supersonic cruise portion of the operating envelope, primarily descent from supersonic cruise. The emissions and performance goals of the HSCT combustor development program are shown below in Table II - 1.

Category	**Requirement**	**Unit**
Supersonic Cruise NO_X	≤5	EI (gm NO_X /Kg fuel)
Supersonic Cruise Combustion Efficiency	≥ 99.9	%
Subsonic Cruise NO_X	≤10	EI (gm NO_X /Kg fuel)
Subsonic Cruise Efficiency	≥ 99	%
Integrated Airport Vicinity Emission Landing/Take-Off Cycle (LTO)		
NO_X	≤5	lb_m NO_X/hr/1000 lb_f thrust/cycle
CO	≤7.8	lb_m CO/hr/1000 lb_f thrust/cycle
UHC	≤1.0	lb_m UHC/hr/1000 lb_f thrust/cycle
SAE Smoke Number	≤18.1	
Pressure Drop (Section Loss Pt3 ==> Pt4)	≤7.2	%

Table II - 1 Emissions and Performance Goals of HSCT Combustor Minimize Atmospheric Impact

Providing for the operational capability of a flight engine while satisfying the constraints of avoiding steady state operation in the prohibited zones of the rich zone stoichiometry diagram is the focus of this task. For a two-bank RQL combustor, with the outer bank designed to receive 63% of the airflow and the inner bank designed to receive 37% of the airflow, with fuel shifting control technology applied, the resulting stoichiometry diagram is shown in Figure II - 7 with the corresponding reduction in front end flame temperatures shown in Figure II - 8. As is demonstrated in these figures, the descent and approach conditions fall within the regime where the combustor is operated in a fuel-shifted mode. In the descent condition, the ID bank front end is operated above stoichiometric while the OD bank is operated lean in the front end. By the approach condition, the mode shifting behavior is reversed such that the OD bank is rich while the ID bank maintained with a lean front end. The combustor exit flame temperatures for non-shifted and fuel-shifted configuration are shown in Figure II - 9 and Figure II - 10, respectively. These figures show that the combustor exit flame temperatures are maintained within limits acceptable for turbine durability and are not anticipated to induce a local over-temperaturing progressing into the turbine. The turbine design would, of course, have to accommodate an OD peaked combustor exit profile at moderate power levels and an ID peaked profile at moderate to low power conditions. While not a durability issue, because of the relatively low exit flame temperatures associated with fuel-shifted conditions, the aerodynamic design of the turbine must accommodate this type of combustor behavior. At power levels where the combustor would operate with both banks uniform, it is anticipated that the combustor exit profile would be fairly flat and uniform commensurate with a low emissions RQL combustor.

Objectives

The objective of the task reported herein, which was conducted as Work Breakdown Structure (WBS) 1.0.2.5 of the NASA Critical Propulsion Components (CPC) Program under Contract NAS3-27235, was to evaluate the low emissions potential of a Rich-Quench-Lean (RQL) combustor for use in the High Speed Civil Transport (HSCT) application. The specific intent was to evaluate Fuel Shifting as a combustor control methodology for a multiple bank Rich-Quench-Lean combustor. The use of this control technique was intended to reduce the risk associated with RQL combustors by eliminating the need for a variable geometry mechanism to control combustor airflow while still maintaining low emissions, good performance and operability throughout the operating envelope. Specific objectives of the task were to:

- Design and fabricate a combustor that represents a small narrow sector of the full scale Dual Radial Reduced Scale Quench RQL combustor design for testing in the Fuel Shifting Sector Rig.
- Utilize Reduced Scale Quench Convoluted Liner/Quench Plate configuration for expediency of design and fabrication efforts while still maintaining capability of demonstrating fuel shifting technology.
- Perform combustion tests at critical conditions in the flight envelope, including airport vicinity and subsonic cruise conditions, to determine performance, emissions, turbine inlet radial profiles and operability of this concept.
- Demonstrate emissions and performance benefits achieved with fuel shifting technology.

The activities performed in this program were consistent with the above objectives. The design activities for the Fuel Shifting Sector Rig were conducted as a joint activity between Pratt & Whitney and United Technologies Research Center. Combustion tests of the Fuel Shifting Sector Rig were conducted in dedicated facilities at the United Technologies Research Center. This facility was located in Cell 3 of the Jet Burner Test Stand at United Technologies Research Center. The facility is capable of testing at combustor pressures up to 200 psia, combustor inlet air temperatures of 800°F, and contained a fuel delivery and control system capable of providing independent fuel control and metering to each fuel injector of the RQL test combustor. The combustor rig contained two modules positioned vertically to simulate the ID and OD banks of the product design concept to allow evaluation of fuel shifting control technology in a size scale consistent with a product implementation of reduced scale quench technology for an RQL combustor under development in the High Speed Research program. The Fuel Shifting Sector Rig combustors were designed and fabricated specifically for this task and were targeted as a representative section of the full scale RQL combustor concepts.

This report details the activities and results of the evaluation of the fuel shifting combustor control technology development and combustor rig demonstration. Section I provides a Program Summary, while Section II includes introductory and background information. Section III provides a description of the test facility and Section IV provides a description of the combustor hardware. Section V describes the instrumentation and emissions systems used in the evaluation of the performance of the combustor while the results of the combustion test programs are discussed in Section VI. Conclusions are presented in Section VII.

Section III - Combustor Test Facility

Layout

The Fuel Shifting Sector Rig, rich-quench-lean (RQL) combustor test facility included a high-temperature airflow distribution system with two available heating sources that provided a wide range of inlet conditions, a fuel delivery and control system capable of providing independent fuel control and metering to each fuel injector of the RQL test combustor, the RQL combustor test section, an emissions system designed to provide ganged as well as radial profile information and an exhaust system.

The total combustor airflow was supplied to the test facility installed in Cell 3 of the Jet Burner Test Stand at United Technologies Research Center by continuous-flow compressors. This flow was heated by one of two non-vitiated air heaters and metered by a venturi and delivered to the combustor through a 4 inch pipe. The layout of the rig is shown in Figure III - 1. The inlet air could be presented to the combustor as either a plenum fed system or through a pre-diffuser. The plenum fed configuration with flow straightener is shown in the Figure III - 1. The rich zone and quench zone airflows were set by the combustor hardware and determined by the relative effective flow areas of the passages leading into each zone of the combustor.

A water-cooled emissions probe section was located at the exit of the combustor. The probe holder was a water-cooled stainless steel plate with a trapezoidal passage to maintain the cross-sectional shape of the exit transition zone. Six through-holes, for the piccolo style probes, were fitted with Thermonics fittings at either end. These fittings allowed the probes to be removed and replaced rapidly without the need to open the rig. The emissions sampling system is described in Section V.

A short, water-cooled reducer of circular cross section was installed aft of the probe holder. This spool piece was 8-inches long, with a 10-inch upstream diameter reducing to an 8-inch diameter downstream and was fabricated from rolled and welded stainless steel.

Downstream of the reducer section, the combustor exhaust passed through a stainless steel tee section located upstream of the combustor back-pressure control valve. The tee section diverted the flow through two 90-deg. turns prior to the introduction of high-pressure water sprays to cool the flow before entering the electrically driven back-pressure control valve. An 8-inch diameter, air-cooled window was mounted at one end of the tee section to provide indication of a combustor flame. A video camera on a tripod relayed the flame image to the control room where it could be observed and/or recorded.

Airflow Delivery and Heating

Air was supplied by four Atlas Copco centrifugal air compressors capable of a combined airflow of 20 lbm/sec at pressures up to 400 psi. Prior to delivery to the test cell, the air passed through one of two legs, each with a different heater, allowing a broad range of combustor inlet temperatures to be investigated. One leg delivered the air through a non-vitiated Petro-Chem heater capable of heating 10 lbm/sec of air to temperatures ranging from ambient up to 500°F. The second leg delivered the air through a T-Thermal, non-vitiated, gas-fired heating system. This system, rated at 15.1 BTU/hr, can heat up to 20 lbm/sec of air to temperatures ranging from 550°F to 800°F. Each leg was independently controlled by a large capacity regulator before joining together upstream of a common venturi. A secondary 400 psi air system supplied instrument air to pressure regulators and provided un-metered cooling air to the window at the rear of the rig.

Referring to the rig layout in Figure III - 1, airflow to the rig was measured using an ISO 9300 standard venturi mounted upstream of the test rig. The venturi had a 1.8 inch diameter throat and remained choked for all test conditions. Airflow rates were established by using a large capacity regulator to provide a fixed pressure to the total airflow metering venturi. Downstream of the venturi, the air flowed through a T-section, fitted with a water cooled burst disk rated at 200 psi. This device was sized to prevent an accidental over-pressure of the test rig.

The air was delivered into an 18 inch diameter plenum section. During a majority of the tests, the air was then passed through a flow straightener and then into the rich zone spool piece plenum that housed the two rich-quench modules. The effects of a pre-diffuser flow field entering the modules and its impact on emissions and profile behavior were investigated in some tests by replacing the flow straightener with the pre-diffuser as shown in Figure III - 2. The pre-diffuser was fundamentally a 2-d rectangular, single passage pre-diffuser with a constant width of 5 inches. The sidewalls of the pre-diffuser on both the inlet and exit sections were straight vertical walls with no convergence or divergence. The inlet to the pre-diffuser was a bellmouth on the top and bottom surfaces constructed from stainless steel plate stock rolled to 45-degree segments of a 6-inch radius. The throat of the pre-diffuser was 2.4 inches high. The pre-diffuser expanded at approximately a 10 degree total included angle over an axial length of 6.85 inches to an exit height of 3.6 inches. The installation of this pre-diffuser in the rig is shown in Figure III - 3.

The Fuel Shifting Sector Rig combustor configuration was designed to control the airflow split between the rich and quench zone sections via the effective areas of the fuel injector/swirler/bulkhead assembly and the rich zone liner cooling/quench air flow passages. These flow passages were designed to provide the desired rich zone flow of approximately 23% of the total combustor air flow.

Fuel Flow

A schematic diagram of the fuel delivery system appears in Figure III - 4. A 1500-psi positive displacement pump was used to transfer Jet-A fuel from the above ground storage tanks to the test cell at flow rates up to 700 lbm/hr. The fuel delivery system was split into four separate legs, consisting of a high flow and a low flow leg for each of the two combustor modules. Each leg was activated or deactivated by a valve controlled from a touch screen controller, and the flow rate was controlled with a pressure-reducing regulator. Each high and low-flow leg was metered with a turbine flow meter in series with an orifice. The orifices were sized for the requirements of each test to control fuel flow over a broad range of flow rates. The high and low-flow legs were then combined to a single fuel supply for each RQL module in the test section.

Water Flows

The exhaust section spool pieces of the Fuel Shifting Sector Rig were cooled by low pressure water. The internal, cast ceramic liner used in the exit transition zone reduced the heat loss from the combustor and maintained a hot combustor wall. However, the cast ceramic was not a sufficient insulator to restrict metal temperatures of the pressure vessel spool sections to acceptable limits. The required water flow rate was minimal and was set to a conservative level for each combustor section (lean zone spool piece, probe holder, tee section). High pressure water was injected upstream of the back-pressure valve. This flow reduced the combustor exhaust gas temperature and suppressed noise. It was supplied from the facility closed loop cooling system by a high pressure, centrifugal water pump capable of flows up to 350 GPM at pressures of 700 psi.

Nitrogen Flow

High pressure gaseous nitrogen, used for fuel injector purge and sampling probe purge, was supplied from a 15000 SCF storage tank that was charged to 2400 psi by a liquid nitrogen vaporizer-compressor system. The nitrogen was regulated to provide adequate pressures and flows for purge.

Section IV - Combustor Hardware Design

The RQL Fuel Shifting Sector Rig was designed to approximate a small narrow sector of the RQL 3770.54 Product Engine. The product engine design consisted of two banks radially with the inner bank flowing approximately 40% of the total combustor air flow and the outer bank sized to flow approximately 60% of the total combustor flow. The inner bank was composed of 24 modules. The Fuel Shifting Sector Rig was therefore designed to fit approximately within a 15-degree sector. However, for expediency of hardware design and fabrication, both modules in the Fuel Shifting Sector Rig were designed and fabricated to be the same size module with the same effective flow area. The representation of behavior associated with a 60/40 OD/ID split of airflow between banks as envisioned for the product combustor concept was simulated through a weighting of sampling ports in the emissions sampling system and is discussed further in Section V.

The Fuel Shifting Sector Rig combustor configuration, Figure IV - 1, consisted of rich zone spool piece that housed two rich-quench modules oriented in a vertical configuration. Each rich-quench module contained a fuel injector device, igniter and a convoluted rich zone liner with quench plate that formed the rich combustor and the rapid quench process of the reduced scale quench technology. Both modules were aft mounted on a water-cooled bulkhead and their exhaust gases dumped into a common exit transition zone with cast ceramic combustor liners contained within the lean zone spool piece.

Rich Zone Spool Piece

The rich zone spool piece was comprised of 18 inch diameter, schedule 40 pipe with 300 lb flanges. The purpose of the rich zone spool piece was to house the RQL modules and to act as the rig pressure vessel, similar in function to an engine diffuser case. The cylindrical wall of this spool piece was equipped with through ports for rich zone bulkhead cooling water, fuel lines to each fuel injector (one per module), ignition leads to each igniter (one per module) and several fittings to allow passage of the combustor pressure and temperature instrumentation. This section housed the two rich-quench modules.

Rich-Quench Modules

The rich-quench modules were mounted in parallel in an over and under, vertical configuration as shown in Figure IV - 1, similar to the engine concept shown in Figure II - 1 and Figure II - 2. The upper module was designated as Module 1, or the Outer Diameter (OD) combustor. The lower module was designated as Module 2 or Inner Diameter (ID) combustor. The Modules were spaced vertically 6.5 inches apart as measured from module centerline to module centerline. Each combustor module (see Figure IV - 2 through Figure IV - 5) consisted of a water-cooled, rich zone bulkhead with a fuel injection device mounted to the bulkhead to allow the appropriate quantity of air, approximately 23% of total combustor air, to enter the rich zone. This fuel injection device is described in further detail below. An igniter was also positioned to protrude slightly through the rich zone bulkhead to deliver a spark to the rich zone of the combustor. A small diameter igniter procured from Unison Industries and originally intended for use on the RQL annular rig was utilized for this combustor rig. A single, multi-channel exciter (with capabilities of attaching up to six igniters) provided the energy for spark ignition. The rich-quench module also consisted of a convoluted rich zone liner, nose-piece, and quench plate, each discussed below. The module assemblies were suspended inside a stainless steel tubular shroud.

Radial-Inflow High-Shear Injector

The fuel injector employed for the Fuel Shifting Sector Rig combustion tests with the reduced scale quench convoluted liner/quench plate configuration was a radial inflow swirler that passed all of the rich zone airflow. Fuel was injected through a radial jet injector. A schematic view of a radial inflow swirler/injector is shown in Figure IV - 6. This concept is a variation of a standard design that has been under investigation at Pratt & Whitney and United Technologies Research Center for some time. An extensive database on its definition was evolved in the effort of Ref. 3. The configuration consists of radial inflow swirlers with air introduced through inner and outer passages with approximately a 85% /

15% split respectively. The combined passages yielded an effective flow area of 0.88 in^2. Each of these passages contained tangential slots through which the air was admitted, imparting a co-rotating swirl component to the flow. The outer air passage slots were oriented at a 45 degree angle off radial while the inner passage slots were oriented at approximately a 15 degree angle off radial. A centrally mounted fuel injector delivered fuel through 6 radial jets, 0.060 inches in diameter, spaced at even azimuthal intervals. These fuel jets penetrated through the inner airflow and impinged on the inner side of the wall between the two air passages. There, a film of fuel was developed, flowing axially downstream until it left the surface of that wall and was sandwiched between the two high-speed shearing air flows.

Rich Zone Liner

The rich-quench module also consisted of a rich zone liner, shown in Figure IV - 7, constructed from PWA1422, a directionally solidified nickel alloy. The liners were fabricated using the quickcast process that utilizes a stereolithography model as the pattern in the investment casting process. The liner was 6.715 inches long and was cylindrical in shape with a 5 inch inner diameter towards the front end of the rich zone. The leading edge of the liner necked down to 4.33 inches in diameter to accept the rich zone bulkhead. The bulkhead/swirler/fuel injector sub assembly engaged approximately 0.7 inches axially into the liner providing a net axial flowfield length from bulkhead to quench holes of approximately 6 inches. As the rich zone flow field progresses towards the quench plane, the liner shape is convoluted to channel the rich zone flow into four channels, as shown in Figure IV - 7 and Figure IV - 8 in preparation for the injection of the quench air. All four channels are 0.5 inches in channel height. The two outermost channels extended 2.85 inches in vertical length while the inner two channels extended 5.15 inches in vertical length. These channels resulted in a flow area of 8.86 in^2 approaching the quench air introduction plane. The liner was held in position by eight tabs spaced uniformly about the circumference of the outer surface of the liner. These tabs were engaged by a tab holder mechanism that protruded from the tubular shroud to grab the tabs on the liner. The surfaces of the rich zone bulkhead and the convoluted liner exposed to the combusting gases were coated with a thermal barrier coating (TBC) applied with a plasma spray process. The rich zone liner was convectively cooled with quench air. Towards the aft end of the rich zone section, the convective cooling air was guided, such that the air maintained contact with the rich zone liner, through the use of a "nose-piece" which acts as an aerodynamic guide so that the convective air maintains its velocity and, hence, cooling effectiveness as it is channeled into the convoluted regions. The liner/nose piece assemblies were suspended inside a stainless steel tubular shroud that forced the quench air across the upstream cylindrical surface of the rich liner for convective cooling of that region.

Quench Zone with Reduced-Scale-Quench Technology

Beyond directing the cooling/quench air along the backside surface of the convoluted liner, the "nose-piece" also distributed the quench air to the downstream edge of the liner. There it was injected into the rich zone gas from 112 small orifices in a toothed quench plate to produce the reduced-scale-quench (RSQ) mixing. This quench plate had been developed and optimized under a related task of this NASA contract (Ref. 4). The resultant, optimized geometry, known as quench plate #15, was utilized in this combustion rig and is shown in Figure IV - 9 and Figure IV - 10. The quench orifices were sized to control the pressure drop and, in combination with the rich zone swirler effective flow area, provide the appropriate quantity of quench air to maintain the desired split of approximately 23% air into the front end of the combustor. The quench orifices were slots of 0.325 inches in axial length. The width of each slot varied throughout the channel lengths and was determined by the previous effort to provide optimum mixing for minimizing NO_X emissions. The quench channels in the quench plate were designed to the same dimensions as the exhaust of the convoluted rich zone liner, 0.5 inches in channel height. These quench plates were also fabricated from PWA1422 utilizing the quickcast process. Additionally, a small fraction of the quench air (4% of total combustor air) was bled through small effusion holes, 274 holes of 0.030 inches in diameter, on the downstream face of the plate as cooling air for the aft face of the quench plate. This aft face and the convoluted surface extending just downstream of the quench orifices were coated with the plasma sprayed TBC for thermal protection as well.

Exit Transition Zone

The reacting gas entered a lean combustion zone after passing through the modules. In the engine configuration, this zone collects the flow from the two radial banks of modules and converges it into the first turbine vanes in the engine concept. For the Fuel Shifting Sector Rig, this zone represented a sector portion of this annular exit transition zone. The exit transition zone consisted of a water-cooled, convergent lean zone spool piece that was six inches long with an 18 inch, 300 lb flange at the upstream end and a 10 inch, 300 lb threaded bolt circle on the downstream face. A castable liner of Plibrico Plicast 40, a commercially available ceramic, consisting primarily of alumina and silicate, was molded inside this piece to provide the flowpath surfaces. This material is capable of withstanding temperatures up to 3400°F and was shaped to form the trapezoidal cross-section simulating the convergence downstream of the combustors to prepare the flow for entry into the turbine (see Figure IV - 11, Figure IV - 12 & Figure IV - 13). The exit transition zone was approximately 11.25 inches in vertical, radial height at the upstream region where the effluent from the modules entered this exit transition zone. From there, the flow field persisted axially for approximately 0.5 inches and was then contracted at approximately a 27 degree half-angle on both the inner and outer (top and bottom) surfaces of this exit transition zone, progressing towards the 6.5 inch high exit plane dimension shown in Figure IV - 12. The sidewalls of the exit transition zone were non-convergent as the flow progressed axially, representing a sector of the annular exit transition zone. The sidewalls were angled consistent with the exit plane dimensions shown in the emissions probe plate of Figure IV - 12, where the upper or outer edge of the exit is 6.5 inches in width while the lower, inner edge was 4.5 inches in width. A plate with a thermal barrier coating was affixed to the upstream flange of the spool piece and reinforcing rod loops were welded to the inner surface of the spool piece to restrain the ceramic liner and ensure that it did not dislodge or become loose.

Section V - Instrumentation

Fuel Shifting Sector Rig

Static Pressures

The locations of instrumentation are shown in Figure V - 1 and Figure V - 2 where air flows from right to left. Pressure taps are identified by names beginning with the letter P. Pressures were recorded via a combination of individual transducers and scanners.

When operated in the plenum fed configuration, combustor inlet static pressure was measured in the plenum just upstream of the fuel injectors. The rich zone static pressure was measured just downstream of the fuel injector bulkhead and the exit transition zone static pressure was measured at various locations throughout the exit transition zone. Dual measurements of inlet pressure, rich zone pressure and exit transition zone pressure were made for redundancy.

For all locations where redundant measurements were acquired (e.g. combustor inlet, exit transition zone etc...), the readings were assessed and analyzed for validity. All readings determined to be valid were averaged to obtain the measurement value for that location.

Temperatures

The locations of instrumentation are shown in Figure V - 1 and Figure V - 2 where air flows from right to left. Thermocouples are identified by names beginning with the letter T.

Temperatures were recorded via a combination of individual thermocouples and scanners. Combustor inlet stagnation temperature (T3) was measured in the plenum just upstream of the fuel injector. Dual measurements of inlet temperature were made for redundancy.

Surface thermocouples were welded to the backside surface of the rich combustor liner to measure the backside metal temperature of the rich zone liner. The thermocouples were located along the liner as shown in Figure V - 2 and Figure V - 3.

For all locations where redundant measurements were acquired (e.g. combustor inlet, etc...), the readings were assessed and analyzed for validity. All readings determined to be valid were averaged to obtain the measurement value for that location.

Pre-Diffuser Pressures

When operated in the diffuser fed configuration, the diffuser plate was instrumented with eighteen pressure taps to enable an assessment of flow uniformity within and exiting the pre-diffuser (Figure V - 4). The static wall pressure was measured with twelve taps. These pressure taps were arranged to record static pressure at the top and bottom of the diffuser throat and the top and bottom of the pre-diffuser exit. Three circumferential locations (left, center and right) were measured at each of those four axial/radial positions. The remaining six pressure taps were built into a rake mounted vertically at the exit plane of the diffuser, at evenly spaced intervals, to measure total pressure across the flowfield.

Emissions Sampling and Analysis

Emissions Sampling System

The principle focus of the Fuel Shifting Rig was to document the emissions levels and profiles at the exit of a fuel shifting RQL combustor at subsonic cruise and airport vicinity operating conditions. Carbon monoxide (CO), oxygen (O_2), carbon dioxide(CO_2), unburned hydrocarbons (UHC), and oxides of nitrogen (NO_X) were measured. The emissions samples were acquired using six, horizontal, piccolo-style

probes, arranged across the lean zone exit. These probes were numbered one through six, from top to bottom, as shown in Figure V - 5. A photograph of the probes installed in the probe holder is shown in Figure V - 6. Probes one through three were constructed with six orifices and probes four through five were constructed with four orifices, with each orifice being 0.022 inches in diameter. This was done to simulate the engine geometry where the ID combustor module was two thirds the size of the OD combustor module. For example, 18 orifices out of a total of 30 orifices essentially sampled the outer module and hence provided 60% of the sampled orifices during a full ganged sample of all probes taken simultaneously. Each probe was internally manifolded, resulting in a ganged sample across all orifices for that particular probe.

The emissions samples were routed from the probes through electrically heated lines to a valve panel. This system, controlled from the touch screen in the control room, allowed for samples to be taken from any singular probe, or all probes at once. The sample was then transferred through an externally heated ¼-inch, stainless steel process tube, maintained at 350°F, to the emissions cart.

At the emissions cart, the sample was distributed to the five analyzers. The UHC and NOx samples were sent directly to their corresponding analyzers where they were measured wet. The CO, CO2, and O2 samples were passed through a capillary dryer to remove the moisture before those samples were analyzed. All the emissions analyzers employed were capable of monitoring the emissions continuously. The measured data were then sent to the JETDAS data acquisition system, where they could be recorded electronically, as well as displayed on-line for the test conductor and other observers to study during the test.

Emissions Analysis Procedures and Performance Parameters

The UTRC emissions sampling and analysis system is maintained and operated in accordance with ARP 1256A specifications. The emissions cart employed is capable of continuous monitoring of emissions of carbon monoxide (CO), oxygen (O_2), carbon dioxide (CO_2), unburned hydrocarbons (UHC) and oxides of nitrogen (NO_x) as shown in Figure V - 7. CO and CO_2 levels are determined from individual Milton Roy Model 3300 non-dispersive infrared analyzers. A Thermo Environmental Model 10 chemiluminescence analyzer is used to measure NO_X composition. A Rosemount Model 755 paramagnetic device is used for oxygen analysis and a Beckman Model 402 flame ionization detector is used to monitor unburned hydrocarbons.

Emissions samples were routed from the probe through electrically heated lines to a valving system, where the samples could either be combined or extracted individually, and then delivered to the gas analyzers. The samples were then transferred from the valving system to the emissions cart through an externally insulated 304 Stainless Steel line that was maintained at 350F. At the cart the sample was divided for distribution to the five analyzers. The NO_X and UHC samples were plumbed directly to the corresponding analyzers and measured as wet samples. The CO_2, CO and O_2 samples passed through a capillary dryer that was used to remove the moisture before those samples were analyzed. The compositions of NO_X, CO, UHC, CO_2 and O_2 were determined from the appropriate analyzer reading and a corresponding calibration curve.

The results from analyses of the emission sample were used to calculate the primary performance parameters for a combustion test. These parameters included the fuel/air ratio, emissions indices, combustion efficiency, flame temperature and radial profile factors. Since each of these parameters was based on the sample analysis, the parameter reflected either a local value at a particular vertical or radial height at the exit plane when individual probe samples were analyzed for profiles, or a global value, across the combustor gas path, when all probes were ganged together.

Fuel/Air Ratio

The fuel/air ratio calculated from the emissions analysis followed the technique outlined by Spindt (Ref. 5). This procedure has been used by UTRC for analysis of emissions-based fuel/air ratio because it is based on ratios of the component concentrations and is, therefore, not sensitive to small errors in gas sample analysis. Furthermore, no correction for condensed water is necessary, as long as all components

are treated the same. This method can be applied to exhaust gas analysis without regard to the degree of combustion encountered. The fuel/air ratio (f/a) was calculated as:

$$f/a = \left\{ F_b \left(11.492\, F_c \cdot \frac{1 + R/2 + Q}{1 + R} + \frac{120(1 - F_c)}{3.5 + R} \right) \right\}^{-1}$$

where:

$$F_b = \frac{PPM_{CO} + PPM_{CO_2}}{PPM_{CO} + PPM_{CO_2} + PPM_{UHC}}$$

$$F_c = \frac{12.01}{12.01 + 1.008\left(\frac{H}{C}\right)}$$

$$R = \frac{PPM_{CO}}{PPM_{CO_2}}$$

$$Q = \frac{PPM_{O_2}}{PPM_{CO_2}}$$

and:

PPM_i = parts per million molar concentration of species i
C, H = number of carbon and hydrogen atoms, respectively, contained in the fuel.

The Spindt technique combined CO, UHC, CO_2, and O_2 emissions to determine the fuel/air ratio. As with any similar procedure, the result was largely influenced by the CO_2 and O_2 concentrations.

The quality of the data for each operating condition was established with the FARR (ratio of the fuel/air ratio determined from emissions data and the fuel/air ratio determined from the upstream air and fuel flow-meters). The FARR was plotted against the set point (probe port weighted, 60% OD/40% ID, when operating in a fuel shifted mode) fuel/air ratio for each operating condition. A FARR of 1.0 signified perfect agreement between the emissions based fuel air ratio and the set point, metered, input fuel air ratio, while a FARR value in the range of 0.9 to 1.1 was considered acceptable agreement between the emissions and set point values.

Emissions Index

An emissions index of specie i (EI_i) was calculated for NO_X, CO, UHC, CO_2 and O_2 according to:

$$EI_i = \frac{PPM_i}{1000} \cdot \frac{\left(1 + f/a\right)}{f/a} \cdot \frac{MW_i}{MW_{comb}}$$

where:

PPM_i = parts per million molar concentration of specie i
MW_i = molecular weight of specie i
f/a = fuel/air ratio based on the sample analysis
MW_{comb} = molecular weight of the combustor composition

For the Fuel Shifting Sector Rig tests, all emissions are reported, consistent with ICAO Annex 16 procedures, in an in-situ state, i.e., wet (accounting for water vapor in the combustion products). This was agreed upon to facilitate comparisons with the LPP MRA combustor tests for Combustor Downselect. The correction for water vapor for CO, CO_2 and O_2 essentially amounts to approximately a 5% correction to the emissions indices but varies slightly as a function of operating condition of the combustor.

Combustion Efficiency

The combustion efficiency (η_{comb}, with units of percent) was calculated from the sample analysis, where inefficiencies were represented by emissions indices of the incompletely oxidized species, CO and UHC:

$$\eta_{comb} = 100 - 0.1\left(0.235\ EI_{CO} + EI_{UHC}\right)$$

The efficiency calculation assumed that the unburned hydrocarbons had the same heat of combustion as the Jet-A fuel, 18500 BTU/lb.

Radial Profile Factor

The instrumentation described in Section IV provided data on the emissions at the combustor exit at different radial locations. The temperature profile factor was calculated from the emissions based temperature over the radial span.

The temperature profile factor was critical for determining turbine inlet conditions. The emissions based temperature was used to calculate the profile factor over the radial span of the combustor as follows:

$$Profile\ Factor = \frac{\left(T_{local} - T_{average}\right)}{\left(T_{average} - T_3\right)}$$

where T_{local} was the temperature at a specific radial location determined from equilibrium methods based on the sample gas constituent analysis, $T_{average}$ was obtained from equilibrium methods based on the sample gas constituents of the average of the two ganged data points taken before and after the local emissions samples were taken, and T_3 was the average inlet air temperature over all points taken.

Section VI - Combustor Test Evaluation Results

Fuel Shifting Sector Rig Test Chronology

Fuel Shifting Sector Rig combustion tests were conducted in Cell 3 of the Jet Burner Test Stand at United Technologies Research Center. Shakedown of the facility was conducted in a wall-jet configuration of the combustor for convenience while the reduced scale quench convoluted liner/quench plate hardware was being fabricated. These shakedown tests began October 10, 1997 and continued through October 22, 1997 as runs FSR003 through FSR007. No data is reported from this test series as it was conducted merely for the purposes of a facility and fuel system shakedown so that the test operator could become familiar with conducting fuel shifting combustion tests.

Emissions testing for the reduced scale quench convoluted liner/quench plate combustor was focused on conditions taken from the HSR/CPC Program Coordination Memo GE97-002-C, summarized in Table VI - 1, with the primary intent of obtaining airport vicinity emissions in support of the Combustor Downselect and for evaluation of Fuel Shifting benefits. The facility was limited in its inlet temperature capability up to 800F and was therefore unable to acquire nominal supersonic cruise or takeoff emissions. However, since both of these conditions are high power and would operate in a uniform, non-fuel shifted mode, a single fuel nozzle integrated module rig is sufficient to acquire the representative emissions of these conditions. This data was acquired in Ref. 4. In addition, the facility was limited in its inlet pressure capability up to 150 psia. Therefore, the climb condition was acquired at this de-rated pressure. Pressure excursion data was acquired to facilitate the extrapolation of results to the 212 psia pressure.

	T3 (F)	P3 (psia)	f/a
Nominal Supersonic Cruise	1200	150	0.0300
Nominal Subsonic Cruise	630	80	0.0200
100% Thrust LTO (Takeoff)	919	301	0.0329
65% Thrust LTO (Climb)	740	212	0.0248
34% Thrust LTO (Approach)	588	134	0.0187
15% Thrust LTO (Descent)	446	82	0.0141
5.8% Thrust LTO (Idle)	295	45	0.0113

Table VI - 1 Uniform Schedule of Test Points

The series of tests with the reduced scale quench convoluted liner/quench plate combustor as a plenum fed configuration began as build 2 on January 16, 1998 with lean blow out tests recorded as runs FSR009 and FSR010. Emissions tests of this configuration were recorded as runs FSR011 through FSR017 continuing through February 10, 1998. The test points are documented in Table VI - 2 through Table VI - 9.

T3	P3	P3.2	dP/P total	Wa total	f/a oa	f/a oa	$\phi_{rich,1}$	$\phi_{rich,2}$	emissions	Comment	Run	Pt
(F)	(psia)	(psia)	(%)	(pps)		probe weighted						
250	45	44	4.5%	2.60	0.0142	0.0142	0.80	0.80	G	T3 excursion	11	8
295	45	44	4.5%	2.52	0.0142	0.0142	0.80	0.80	G	T3 excursion	11	12,19
350	45	44	4.5%	2.43	0.0142	0.0142	0.80	0.80	G	T3 excursion	11	25
400	45	44	4.5%	2.36	0.0142	0.0142	0.80	0.80	G	T3 excursion	12	4
295	45	44	4.5%	2.52	0.0142	0.0142	0.80	0.80	G	P3 excursion	11	12,19
295	60	59	4.5%	3.36	0.0142	0.0142	0.80	0.80	G	P3 excursion	11	24
295	45	44	4.5%	2.52	0.0089	0.0089	0.50	0.50	G	f/a excursion	11	9
295	45	44	4.5%	2.52	0.0107	0.0107	0.60	0.60	G	f/a excursion	11	10
295	45	44	4.5%	2.52	0.0124	0.0124	0.70	0.70	G	f/a excursion	11	11
295	45	44	4.5%	2.52	0.0142	0.0142	0.80	0.80	G	f/a excursion	11	12,19
295	45	44	4.5%	2.52	0.0160	0.0160	0.90	0.90	G	f/a excursion	11	20
295	45	44	4.5%	2.52	0.0178	0.0178	1.00	1.00	G	f/a excursion	11	21
295	45	44	3.0%	2.05	0.0142	0.0142	0.80	0.80	G	dP/P excursion	11	22
295	45	44	4.5%	2.52	0.0142	0.0142	0.80	0.80	G	dP/P excursion	11	12,19
295	45	44	6.0%	2.91	0.0142	0.0142	0.80	0.80	G	dP/P excursion	11	23
295	45	44	4.5%	2.52	0.0142	0.0142	0.80	0.80	P	profile	11	13-18

Table VI - 2 Idle Test Conditions Fuel Shifting Sector Rig Plenum Fed Configuration

T3	P3	P3.2	dP/P total	Wa total	f/a oa	f/a oa	$\phi_{rich,1}$	$\phi_{rich,2}$	emissions	Comment	Run	Pt
(F)	(psia)	(psia)	(%)	(pps)		probe weighted						
400	82	80	4.5%	4.30	0.0089	0.0089	0.50	0.50	G	T3 excursion, lean	12	5
446	82	80	4.5%	4.19	0.0089	0.0089	0.50	0.50	G	T3 excursion, lean	12	8
500	82	80	4.5%	4.07	0.0089	0.0089	0.50	0.50	G	T3 excursion, lean	16	111
550	82	80	4.5%	3.96	0.0089	0.0089	0.50	0.50	G	T3 excursion, lean	15	110
400	82	80	4.5%	4.30	0.0124	0.0124	0.70	0.70	G	T3 excursion, non-shifted	12	6
446	82	80	4.5%	4.19	0.0124	0.0124	0.70	0.70	G	T3 excursion, non-shifted	12	10,17
500	82	80	4.5%	4.07	0.0124	0.0124	0.70	0.70	G	T3 excursion, non-shifted	16	112
550	82	80	4.5%	3.96	0.0124	0.0124	0.70	0.70	G	T3 excursion, non-shifted	15	111
400	82	80	4.5%	4.30	0.0258	0.0258	1.45	1.45	G	T3 excursion, rich	14	11
446	82	80	4.5%	4.19	0.0249	0.0249	1.40	1.40	G	T3 excursion, rich	14	13
500	82	80	4.5%	4.07	0.0258	0.0258	1.45	1.45	G	T3 excursion, rich	16	113
550	82	80	4.5%	3.96	0.0258	0.0258	1.45	1.45	G	T3 excursion, rich	15	112
446	82	80	4.5%	4.19	0.0089	0.0089	0.50	0.50	G	f/a excursion	12	8
446	82	80	4.5%	4.19	0.0107	0.0107	0.60	0.60	G	f/a excursion	12	9
446	82	80	4.5%	4.19	0.0124	0.0124	0.70	0.70	G	f/a excursion	12	10,17
446	82	80	4.5%	4.19	0.0142	0.0142	0.80	0.80	G	f/a excursion	12	18.25
446	82	80	4.5%	4.19	0.0160	0.0160	0.90	0.90	G	f/a excursion	12	26
446	82	80	4.5%	4.19	0.0231	0.0231	1.30	1.30	G	f/a excursion	14	12
446	82	80	4.5%	4.19	0.0249	0.0249	1.40	1.40	G	f/a excursion	14	13
446	82	80	4.5%	4.19	0.0267	0.0267	1.50	1.50	G	f/a excursion	14	14
446	82	80	4.5%	4.19	0.0285	0.0285	1.60	1.60	G	f/a excursion	14	15
446	82	80	3.0%	3.42	0.0089	0.0089	0.50	0.50	G	dP/P excursion, lean	14	115
446	82	80	4.5%	4.19	0.0089	0.0089	0.50	0.50	G	dP/P excursion, lean	12	8
446	82	80	6.0%	4.83	0.0089	0.0089	0.50	0.50	G	dP/P excursion, lean	14	111
446	82	80	3.0%	3.42	0.0124	0.0124	0.70	0.70	G	dP/P excursion, non-shifted	14	114
446	82	80	4.5%	4.19	0.0124	0.0124	0.70	0.70	G	dP/P excursion, non-shifted	12	10,17
446	82	80	6.0%	4.83	0.0124	0.0124	0.70	0.70	G	dP/P excursion, non-shifted	14	112
446	82	80	3.0%	3.42	0.0258	0.0258	1.45	1.45	G	dP/P excursion, rich	14	116
446	82	80	4.5%	4.19	0.0249	0.0249	1.40	1.40	G	dP/P excursion, rich	14	13
446	82	80	6.0%	4.83	0.0258	0.0258	1.45	1.45	G	dP/P excursion, rich	14	113
446	82	80	4.5%	4.19	0.0124	0.0124	0.70	0.70	P	profile	12	11-16
446	82	80	4.5%	4.19	0.0142	0.0142	0.80	0.80	P	profile	12	19-24

Table VI - 3 Descent Non-Shifted Test Conditions Fuel Shifting Sector Rig Plenum Fed Configuration

T3	P3	P3.2	dP/P total	Wa total	f/a oa	f/a oa	$\phi_{rich,1}$	$\phi_{rich,2}$	emissions	Comment	Run	Pt
(F)	(psia)	(psia)	(%)	(pps)		probe weighted						
446	82	80	4.5%	4.19	0.0138	0.0124	0.40	1.15	G	fuel shifting	14	16
446	82	80	4.5%	4.19	0.0138	0.0126	0.45	1.10	G	fuel shifting	14	34
446	82	80	4.5%	4.19	0.0138	0.0149	1.10	0.45	G	fuel shifting	14	81
446	82	80	4.5%	4.19	0.0138	0.0151	1.15	0.40	G	fuel shifting	14	64
446	82	80	4.5%	4.19	0.0151	0.0135	0.40	1.30	G	fuel shifting	14	17,25
446	82	80	4.5%	4.19	0.0151	0.0137	0.45	1.25	G	fuel shifting	14	35.42
446	82	80	4.5%	4.19	0.0151	0.0139	0.50	1.20	G	fuel shifting	14	44
446	82	80	4.5%	4.19	0.0151	0.0140	0.55	1.15	G	fuel shifting	14	53
446	82	80	4.5%	4.19	0.0151	0.0142	0.60	1.10	G	fuel shifting	14	63
446	82	80	4.5%	4.19	0.0151	0.0160	1.10	0.60	G	fuel shifting	14	102
446	82	80	4.5%	4.19	0.0151	0.0162	1.15	0.55	G	fuel shifting	14	101
446	82	80	4.5%	4.19	0.0151	0.0164	1.20	0.50	G	fuel shifting	14	91
446	82	80	4.5%	4.19	0.0151	0.0165	1.25	0.45	G	fuel shifting	14	82,89
446	82	80	4.5%	4.19	0.0151	0.0167	1.30	0.40	G	fuel shifting	14	65,72
446	82	80	4.5%	4.19	0.0169	0.0149	0.40	1.50	G	fuel shifting	14	26,33
446	82	80	4.5%	4.19	0.0169	0.0151	0.45	1.45	G	fuel shifting	14	43
446	82	80	4.5%	4.19	0.0169	0.0153	0.50	1.40	G	fuel shifting	14	45,52
446	82	80	4.5%	4.19	0.0169	0.0155	0.55	1.35	G	fuel shifting	14	54
446	82	80	4.5%	4.19	0.0169	0.0156	0.60	1.30	G	fuel shifting	14	55,62
446	82	80	4.5%	4.19	0.0169	0.0181	1.30	0.60	G	fuel shifting	14	103,110
446	82	80	4.5%	4.19	0.0169	0.0183	1.35	0.55	G	fuel shifting	14	100
446	82	80	4.5%	4.19	0.0169	0.0185	1.40	0.50	G	fuel shifting	14	92,99
446	82	80	4.5%	4.19	0.0169	0.0187	1.45	0.45	G	fuel shifting	14	90
446	82	80	4.5%	4.19	0.0169	0.0188	1.50	0.40	G	fuel shifting	14	73,80
446	82	80	4.5%	4.19	0.0151	0.0135	0.40	1.30	G,P	fuel shifting, profile	14	17-25
446	82	80	4.5%	4.19	0.0151	0.0137	0.45	1.25	G,P	fuel shifting, profile	14	35-42
446	82	80	4.5%	4.19	0.0151	0.0165	1.25	0.45	G,P	fuel shifting, profile	14	82-89
446	82	80	4.5%	4.19	0.0151	0.0167	1.30	0.40	G,P	fuel shifting, profile	14	65-72
446	82	80	4.5%	4.19	0.0169	0.0149	0.40	1.50	G,P	fuel shifting, profile	14	26-33
446	82	80	4.5%	4.19	0.0169	0.0153	0.50	1.40	G,P	fuel shifting, profile	14	45-52
446	82	80	4.5%	4.19	0.0169	0.0156	0.60	1.30	G,P	fuel shifting, profile	14	55-62
446	82	80	4.5%	4.19	0.0169	0.0181	1.30	0.60	G,P	fuel shifting, profile	14	103-110
446	82	80	4.5%	4.19	0.0169	0.0185	1.40	0.50	G,P	fuel shifting, profile	14	92-99
446	82	80	4.5%	4.19	0.0169	0.0188	1.50	0.40	G,P	fuel shifting, profile	14	73-80

Table VI - 4 Descent Fuel-Shifted Test Conditions Fuel Shifting Sector Rig Plenum Fed Configuration

T3	P3	P3.2	dP/P total	Wa total	f/a oa	f/a oa	$\phi_{rich,1}$	$\phi_{rich,2}$	emissions	Comment	Run	Pt
(F)	(psia)	(psia)	(%)	(pps)		probe weighted						
525	134	131	4.5%	6.56	0.0089	0.0089	0.50	0.50	G	T3 excursion, lean	15	8
588	134	131	4.5%	6.36	0.0089	0.0089	0.50	0.50	G	T3 excursion, lean	15	13
625	134	131	4.5%	6.25	0.0089	0.0089	0.50	0.50	G	T3 excursion, lean	15	106
675	134	131	4.5%	6.11	0.0089	0.0089	0.50	0.50	G	T3 excursion, lean	16	106
525	134	131	4.5%	6.56	0.0302	0.0302	1.70	1.70	G	T3 excursion, rich	15	7
588	134	131	4.5%	6.36	0.0302	0.0302	1.70	1.70	G	T3 excursion, rich	15	22
625	134	131	4.5%	6.25	0.0302	0.0302	1.70	1.70	G	T3 excursion, rich	15	107
675	134	131	4.5%	6.11	0.0302	0.0302	1.70	1.70	G	T3 excursion, rich	16	107
588	134	131	4.5%	6.36	0.0071	0.0071	0.40	0.40	G	f/a excursion	15	12
588	134	131	4.5%	6.36	0.0089	0.0089	0.50	0.50	G	f/a excursion	15	13
588	134	131	4.5%	6.36	0.0107	0.0107	0.60	0.60	G	f/a excursion	15	14
588	134	131	4.5%	6.36	0.0124	0.0124	0.70	0.70	G	f/a excursion	15	15
588	134	131	4.5%	6.36	0.0142	0.0142	0.80	0.80	G	f/a excursion	15	16
588	134	131	4.5%	6.36	0.0196	0.0196	1.10	1.10	G	f/a excursion	15	17
588	134	131	4.5%	6.36	0.0231	0.0231	1.30	1.30	G	f/a excursion	15	18
588	134	131	4.5%	6.36	0.0249	0.0249	1.40	1.40	G	f/a excursion	15	19
588	134	131	4.5%	6.36	0.0267	0.0267	1.50	1.50	G	f/a excursion	15	20
588	134	131	4.5%	6.36	0.0285	0.0285	1.60	1.60	G	f/a excursion	15	21
588	134	131	4.5%	6.36	0.0302	0.0302	1.70	1.70	G	f/a excursion	15	22
588	134	131	4.5%	6.36	0.0320	0.0320	1.80	1.80	G	f/a excursion	15	23
588	134	131	4.5%	6.36	0.0338	0.0338	1.90	1.90	G	f/a excursion	15	24
588	134	131	4.5%	6.36	0.0356	0.0356	2.00	2.00	G	f/a excursion	15	25
588	82	80	4.5%	3.89	0.0089	0.0089	0.50	0.50	G	P3 excursion, lean	15	108
588	113	110	4.5%	5.36	0.0089	0.0089	0.50	0.50	G	P3 excursion, lean	15	102
588	134	131	4.5%	6.36	0.0089	0.0089	0.50	0.50	G	P3 excursion, lean	15	13
588	154	150	4.5%	7.31	0.0089	0.0089	0.50	0.50	G	P3 excursion, lean	15	101
588	82	80	4.5%	3.89	0.0302	0.0302	1.70	1.70	G	P3 excursion, rich	15	109
588	113	110	4.5%	5.36	0.0302	0.0302	1.70	1.70	G	P3 excursion, rich	15	103
588	134	131	4.5%	6.36	0.0302	0.0302	1.70	1.70	G	P3 excursion, rich	15	22
588	154	150	4.5%	7.31	0.0302	0.0302	1.70	1.70	G	P3 excursion, rich	15	100
588	134	131	3.0%	5.19	0.0089	0.0089	0.50	0.50	G	dP/P excursion, lean	15	105
588	134	131	4.5%	6.36	0.0089	0.0089	0.50	0.50	G	dP/P excursion, lean	15	13
588	134	131	6.0%	7.34	0.0089	0.0089	0.50	0.50	G	dP/P excursion, lean	15	98
588	134	131	3.0%	5.19	0.0302	0.0302	1.70	1.70	G	dP/P excursion, rich	15	104
588	134	131	4.5%	6.36	0.0302	0.0302	1.70	1.70	G	dP/P excursion, rich	15	22
588	134	131	6.0%	7.34	0.0302	0.0302	1.70	1.70	G	dP/P excursion, rich	15	99

Table VI - 5 Approach Non-Shifted Test Conditions Fuel Shifting Sector Rig Plenum Fed Configuration

T3	P3	P3.2	dP/P total	Wa total	f/a oa	f/a oa	$\phi_{rich,1}$	$\phi_{rich,2}$	emissions	Comment	Run	Pt
(F)	(psia)	(psia)	(%)	(pps)		probe weighted						
588	134	131	4.5%	6.36	0.0187	0.0164	0.40	1.70	G	fuel shifting	15	35
588	134	131	4.5%	6.36	0.0187	0.0171	0.60	1.50	G	fuel shifting	15	48
588	134	131	4.5%	6.36	0.0187	0.0167	0.50	1.60	G	fuel shifting	15	45
588	134	131	4.5%	6.36	0.0187	0.0174	0.70	1.40	G	fuel shifting	15	58
588	134	131	4.5%	6.36	0.0187	0.0178	0.80	1.30	G	fuel shifting	15	61
588	134	131	4.5%	6.36	0.0187	0.0196	1.30	0.80	G	fuel shifting	15	97
588	134	131	4.5%	6.36	0.0187	0.0199	1.40	0.70	G	fuel shifting	15	94
588	134	131	4.5%	6.36	0.0187	0.0203	1.50	0.60	G	fuel shifting	15	84
588	134	131	4.5%	6.36	0.0187	0.0206	1.60	0.50	G	fuel shifting	15	81
588	134	131	4.5%	6.36	0.0187	0.0210	1.70	0.40	G	fuel shifting	15	71
588	134	131	4.5%	6.36	0.0196	0.0171	0.40	1.80	G	fuel shifting	15	27,34
588	134	131	4.5%	6.36	0.0196	0.0174	0.50	1.70	G	fuel shifting	15	37,44
588	134	131	4.5%	6.36	0.0196	0.0178	0.60	1.60	G	fuel shifting	15	47
588	134	131	4.5%	6.36	0.0196	0.0181	0.70	1.50	G	fuel shifting	15	50,57
588	134	131	4.5%	6.36	0.0196	0.0185	0.80	1.40	G	fuel shifting	15	60
588	134	131	4.5%	6.36	0.0196	0.0206	1.40	0.80	G	fuel shifting	15	96
588	134	131	4.5%	6.36	0.0196	0.0210	1.50	0.70	G	fuel shifting	15	86,93
588	134	131	4.5%	6.36	0.0196	0.0213	1.60	0.60	G	fuel shifting	15	83
588	134	131	4.5%	6.36	0.0196	0.0217	1.70	0.50	G	fuel shifting	15	73,80
588	134	131	4.5%	6.36	0.0196	0.0220	1.80	0.40	G	fuel shifting	15	63,70
588	134	131	4.5%	6.36	0.0204	0.0178	0.40	1.90	G	fuel shifting	15	26
588	134	131	4.5%	6.36	0.0204	0.0181	0.50	1.80	G	fuel shifting	15	36
588	134	131	4.5%	6.36	0.0204	0.0185	0.60	1.70	G	fuel shifting	15	46
588	134	131	4.5%	6.36	0.0204	0.0188	0.70	1.60	G	fuel shifting	15	49
588	134	131	4.5%	6.36	0.0204	0.0192	0.80	1.50	G	fuel shifting	15	59
588	134	131	4.5%	6.36	0.0204	0.0217	1.50	0.80	G	fuel shifting	15	95
588	134	131	4.5%	6.36	0.0204	0.0220	1.60	0.70	G	fuel shifting	15	85
588	134	131	4.5%	6.36	0.0204	0.0224	1.70	0.60	G	fuel shifting	15	82
588	134	131	4.5%	6.36	0.0204	0.0228	1.80	0.50	G	fuel shifting	15	72
588	134	131	4.5%	6.36	0.0204	0.0231	1.90	0.40	G	fuel shifting	15	62
588	134	131	4.5%	6.36	0.0196	0.0171	0.40	1.80	G,P	fuel shifting, profile	15	27-34
588	134	131	4.5%	6.36	0.0196	0.0174	0.50	1.70	G,P	fuel shifting, profile	15	37-44
588	134	131	4.5%	6.36	0.0196	0.0181	0.70	1.50	G,P	fuel shifting, profile	15	50-57
588	134	131	4.5%	6.36	0.0196	0.0210	1.50	0.70	G,P	fuel shifting, profile	15	86-93
588	134	131	4.5%	6.36	0.0196	0.0217	1.70	0.50	G,P	fuel shifting, profile	15	73-80
588	134	131	4.5%	6.36	0.0196	0.0220	1.80	0.40	G,P	fuel shifting, profile	15	63-70

Table VI - 6 Approach Fuel-Shifted Test Conditions Fuel Shifting Sector Rig Plenum Fed Configuration

T3	P3	P3.2	dP/P total	Wa total	f/a oa	f/a oa	$\phi_{rich,1}$	$\phi_{rich,2}$	emissions	Comment	Run	Pt
(F)	(psia)	(psia)	(%)	(pps)		probe weighted						
575	80	78	4.5%	3.82	0.0089	0.0089	0.50	0.50	G	T3 excursion, lean	15	110
630	80	78	4.5%	3.72	0.0089	0.0089	0.50	0.50	G	T3 excursion, lean	16	6
675	80	78	4.5%	3.65	0.0089	0.0089	0.50	0.50	G	T3 excursion, lean	16	108
725	80	78	4.5%	3.57	0.0089	0.0089	0.50	0.50	G	T3 excursion, lean	17	5
575	80	78	4.5%	3.82	0.0231	0.0231	1.30	1.30	G	T3 excursion, non-shifted	15	115
630	80	78	4.5%	3.72	0.0231	0.0231	1.30	1.30	G	T3 excursion, non-shifted	16	10
675	80	78	4.5%	3.65	0.0231	0.0231	1.30	1.30	G	T3 excursion, non-shifted	16	109
725	80	78	4.5%	3.57	0.0231	0.0231	1.30	1.30	G	T3 excursion, non-shifted	17	6
575	80	78	4.5%	3.82	0.0267	0.0267	1.50	1.50	G	T3 excursion, non-shifted	15	113
630	80	78	4.5%	3.72	0.0267	0.0267	1.50	1.50	G	T3 excursion, non-shifted	16	12
575	80	78	4.5%	3.82	0.0338	0.0338	1.90	1.90	G	T3 excursion, rich	15	114
630	80	78	4.5%	3.72	0.0338	0.0338	1.90	1.90	G	T3 excursion, rich	16	16
675	80	78	4.5%	3.65	0.0338	0.0338	1.90	1.90	G	T3 excursion, rich	16	110
725	80	78	4.5%	3.57	0.0338	0.0338	1.90	1.90	G	T3 excursion, rich	17	7
630	80	78	4.5%	3.72	0.0071	0.0071	0.40	0.40	G	f/a excursion	16	5
630	80	78	4.5%	3.72	0.0089	0.0089	0.50	0.50	G	f/a excursion	16	6
630	80	78	4.5%	3.72	0.0107	0.0107	0.60	0.60	G	f/a excursion	16	7
630	80	78	4.5%	3.72	0.0124	0.0124	0.70	0.70	G	f/a excursion	16	8
630	80	78	4.5%	3.72	0.0142	0.0142	0.80	0.80	G	f/a excursion	16	9
630	80	78	4.5%	3.72	0.0213	0.0213	1.20	1.20	G	f/a excursion	17	45,52
630	80	78	4.5%	3.72	0.0231	0.0231	1.30	1.30	G	f/a excursion	16	10
630	80	78	4.5%	3.72	0.0249	0.0249	1.40	1.40	G	f/a excursion	16	11
630	80	78	4.5%	3.72	0.0267	0.0267	1.50	1.50	G	f/a excursion	16	12
630	80	78	4.5%	3.72	0.0285	0.0285	1.60	1.60	G	f/a excursion	16	13
630	80	78	4.5%	3.72	0.0302	0.0302	1.70	1.70	G	f/a excursion	16	14
630	80	78	4.5%	3.72	0.0320	0.0320	1.80	1.80	G	f/a excursion	16	15
630	80	78	4.5%	3.72	0.0338	0.0338	1.90	1.90	G	f/a excursion	16	16
630	80	78	4.5%	3.72	0.0356	0.0356	2.00	2.00	G	f/a excursion	16	17
630	45	44	4.5%	2.09	0.0089	0.0089	0.50	0.50	G	P3 excursion, lean	16	95
630	80	78	4.5%	3.72	0.0089	0.0089	0.50	0.50	G	P3 excursion, lean	16	6
630	120	117	4.5%	5.59	0.0089	0.0089	0.50	0.50	G	P3 excursion, lean	16	101
630	154	150	4.5%	7.17	0.0089	0.0089	0.50	0.50	G	P3 excursion, lean	16	105
630	45	44	4.5%	2.09	0.0231	0.0231	1.30	1.30	G	P3 excursion, uniform	16	96
630	80	78	4.5%	3.72	0.0231	0.0231	1.30	1.30	G	P3 excursion, uniform	16	10
630	120	117	4.5%	5.59	0.0231	0.0231	1.30	1.30	G	P3 excursion, uniform	16	102
630	154	150	4.5%	7.17	0.0231	0.0231	1.30	1.30	G	P3 excursion, uniform	16	104
630	45	44	4.5%	2.09	0.0338	0.0338	1.90	1.90	G	P3 excursion, rich	16	97
630	80	78	4.5%	3.72	0.0338	0.0338	1.90	1.90	G	P3 excursion, rich	16	16
630	120	117	4.5%	5.59	0.0338	0.0338	1.90	1.90	G	P3 excursion, rich	16	103
630	154	150	4.5%	7.17	0.0338	0.0338	1.90	1.90	G	P3 excursion, rich	17	44
630	80	78	4.5%	3.72	0.0089	0.0089	0.50	0.50	G	dP/P excursion, lean	16	6
630	80	78	6.0%	4.30	0.0089	0.0089	0.50	0.50	G	dP/P excursion, lean	16	92
630	80	78	3.0%	3.04	0.0231	0.0231	1.30	1.30	G	dP/P excursion, non-shifted	16	99
630	80	78	4.5%	3.72	0.0231	0.0231	1.30	1.30	G	dP/P excursion, non-shifted	16	10
630	80	78	6.0%	4.30	0.0231	0.0231	1.30	1.30	G	dP/P excursion, non-shifted	16	93
630	80	78	3.0%	3.04	0.0338	0.0338	1.90	1.90	G	dP/P excursion, rich	16	98
630	80	78	4.5%	3.72	0.0338	0.0338	1.90	1.90	G	dP/P excursion, rich	16	16
630	80	78	6.0%	4.30	0.0338	0.0338	1.90	1.90	G	dP/P excursion, rich	16	94
630	80	78	4.5%	3.72	0.0213	0.0213	1.20	1.20	P	profile	17	46-51

Table VI - 7 Subsonic Cruise Non-Shifted Test Conditions Fuel Shifting Sector Rig Plenum Fed Configuration

T3	P3	P3.2	dP/P total	Wa total	f/a oa	f/a oa	$\phi_{rich,1}$	$\phi_{rich,2}$	emissions	Comment	Run	Pt
(F)	(psia)	(psia)	(%)	(pps)		probe weighted						
630	80	78	4.5%	3.72	0.0204	0.0178	0.40	1.90	G	fuel shifting	16	18
630	80	78	4.5%	3.72	0.0204	0.0181	0.50	1.80	G	fuel shifting	16	29
630	80	78	4.5%	3.72	0.0204	0.0185	0.60	1.70	G	fuel shifting	16	39
630	80	78	4.5%	3.72	0.0204	0.0188	0.70	1.60	G	fuel shifting	16	42
630	80	78	4.5%	3.72	0.0204	0.0192	0.80	1.50	G	fuel shifting	16	52
630	80	78	4.5%	3.72	0.0204	0.0217	1.50	0.80	G	fuel shifting	16	88
630	80	78	4.5%	3.72	0.0204	0.0220	1.60	0.70	G	fuel shifting	16	78
630	80	78	4.5%	3.72	0.0204	0.0224	1.70	0.60	G	fuel shifting	16	75
630	80	78	4.5%	3.72	0.0204	0.0228	1.80	0.50	G	fuel shifting	16	65
630	80	78	4.5%	3.72	0.0204	0.0231	1.90	0.40	G	fuel shifting	16	55
630	80	78	4.5%	3.72	0.0213	0.0185	0.40	2.00	G	fuel shifting	16	19,27
630	80	78	4.5%	3.72	0.0213	0.0188	0.50	1.90	G	fuel shifting	16	30,37
630	80	78	4.5%	3.72	0.0213	0.0192	0.60	1.80	G	fuel shifting	16	40
630	80	78	4.5%	3.72	0.0213	0.0196	0.70	1.70	G	fuel shifting	16	43,50
630	80	78	4.5%	3.72	0.0213	0.0199	0.80	1.60	G	fuel shifting	16	53
630	80	78	4.5%	3.72	0.0213	0.0228	1.60	0.80	G	fuel shifting	16	89
630	80	78	4.5%	3.72	0.0213	0.0231	1.70	0.70	G	fuel shifting	16	79,86
630	80	78	4.5%	3.72	0.0213	0.0235	1.80	0.60	G	fuel shifting	16	76
630	80	78	4.5%	3.72	0.0213	0.0238	1.90	0.50	G	fuel shifting	16	66,73
630	80	78	4.5%	3.72	0.0213	0.0242	2.00	0.40	G	fuel shifting	16	56,63
630	80	78	4.5%	3.72	0.0222	0.0192	0.40	2.10	G	fuel shifting	16	28
630	80	78	4.5%	3.72	0.0222	0.0196	0.50	2.00	G	fuel shifting	16	38
630	80	78	4.5%	3.72	0.0222	0.0199	0.60	1.90	G	fuel shifting	16	41
630	80	78	4.5%	3.72	0.0222	0.0203	0.70	1.80	G	fuel shifting	16	51
630	80	78	4.5%	3.72	0.0222	0.0206	0.80	1.70	G	fuel shifting	16	54
630	80	78	4.5%	3.72	0.0222	0.0238	1.70	0.80	G	fuel shifting	16	90
630	80	78	4.5%	3.72	0.0222	0.0242	1.80	0.70	G	fuel shifting	16	87
630	80	78	4.5%	3.72	0.0222	0.0245	1.90	0.60	G	fuel shifting	16	77
630	80	78	4.5%	3.72	0.0222	0.0249	2.00	0.50	G	fuel shifting	16	74
630	80	78	4.5%	3.72	0.0222	0.0253	2.10	0.40	G	fuel shifting	16	64
630	80	78	4.5%	3.72	0.0213	0.0185	0.40	2.00	G,P	fuel shifting, profile	16	19,27
630	80	78	4.5%	3.72	0.0213	0.0188	0.50	1.90	G,P	fuel shifting, profile	16	30-37
630	80	78	4.5%	3.72	0.0213	0.0196	0.70	1.70	G,P	fuel shifting, profile	16	43-50
630	80	78	4.5%	3.72	0.0213	0.0231	1.70	0.70	G,P	fuel shifting, profile	16	79-86
630	80	78	4.5%	3.72	0.0213	0.0238	1.90	0.50	G,P	fuel shifting, profile	16	66-73
630	80	78	4.5%	3.72	0.0213	0.0242	2.00	0.40	G,P	fuel shifting, profile	16	56-63

Table VI - 8 Subsonic Cruise Fuel-Shifting Test Conditions Fuel Shifting Sector Rig Plenum Fed Configuration

T3	P3	P3.2	dP/P total	Wa total	f/a oa	f/a oa	$\phi_{rich,1}$	$\phi_{rich,2}$	emissions	Comment	Run	Pt
(F)	(psia)	(psia)	(%)	(pps)		probe weighted						
700	154	150	4.5%	6.95	0.0107	0.0107	0.60	0.60	G	T3 excursion, lean	17	42
740	154	150	4.5%	6.83	0.0107	0.0107	0.60	0.60	G	T3 excursion, lean	17	10
800	154	150	4.5%	6.67	0.0107	0.0107	0.60	0.60	G	T3 excursion, lean	17	38
850	154	150	4.5%	6.54	0.0107	0.0107	0.60	0.60	G	T3 excursion, lean	17	41
700	154	150	4.5%	6.95	0.0267	0.0267	1.50	1.50	G	T3 excursion, non-shifted	17	43
740	154	150	4.5%	6.83	0.0267	0.0267	1.50	1.50	G	T3 excursion, non-shifted	17	13
800	154	150	4.5%	6.67	0.0267	0.0267	1.50	1.50	G	T3 excursion, non-shifted	17	39
850	154	150	4.5%	6.54	0.0267	0.0267	1.50	1.50	G	T3 excursion, non-shifted	17	40
740	154	150	4.5%	6.83	0.0071	0.0071	0.40	0.40	G	f/a excursion	17	8
740	154	150	4.5%	6.83	0.0089	0.0089	0.50	0.50	G	f/a excursion	17	9
740	154	150	4.5%	6.83	0.0107	0.0107	0.60	0.60	G	f/a excursion	17	10
740	154	150	4.5%	6.83	0.0124	0.0124	0.70	0.70	G	f/a excursion	17	11
740	154	150	4.5%	6.83	0.0142	0.0142	0.80	0.80	G	f/a excursion	17	12
740	154	150	4.5%	6.83	0.0267	0.0267	1.50	1.50	G	f/a excursion	17	13
740	154	150	4.5%	6.83	0.0285	0.0285	1.60	1.60	G	f/a excursion	17	14
740	154	150	4.5%	6.83	0.0302	0.0302	1.70	1.70	G	f/a excursion	17	15,22
740	154	150	4.5%	6.83	0.0320	0.0320	1.80	1.80	G	f/a excursion	17	23
740	154	150	4.5%	6.83	0.0338	0.0338	1.90	1.90	G	f/a excursion	17	24
740	154	150	4.5%	6.83	0.0356	0.0356	2.00	2.00	G	f/a excursion	17	25
740	154	150	4.5%	6.83	0.0373	0.0373	2.10	2.10	G	f/a excursion	17	26
740	154	150	4.5%	6.83	0.0391	0.0391	2.20	2.20	G	f/a excursion	17	27
740	123	120	4.5%	5.46	0.0107	0.0107	0.60	0.60	G	P3 excursion, lean	17	34
740	133	130	4.5%	5.90	0.0107	0.0107	0.60	0.60	G	P3 excursion, lean	17	35
740	144	140	4.5%	6.39	0.0107	0.0107	0.60	0.60	G	P3 excursion, lean	17	30
740	154	150	4.5%	6.83	0.0107	0.0107	0.60	0.60	G	P3 excursion, lean	17	10
740	123	120	4.5%	5.46	0.0267	0.0267	1.50	1.50	G	P3 excursion, non-shifted	17	33
740	133	130	4.5%	5.90	0.0267	0.0267	1.50	1.50	G	P3 excursion, non-shifted	17	32
740	144	140	4.5%	6.39	0.0267	0.0267	1.50	1.50	G	P3 excursion, non-shifted	17	31
740	154	150	4.5%	6.83	0.0267	0.0267	1.50	1.50	G	P3 excursion, non-shifted	17	13
740	154	150	3.0%	5.58	0.0107	0.0107	0.60	0.60	G	dP/P excursion, lean	17	36
740	154	150	4.5%	6.83	0.0107	0.0107	0.60	0.60	G	dP/P excursion, lean	17	10
740	154	150	6.0%	7.89	0.0107	0.0107	0.60	0.60	G	dP/P excursion, lean	17	29
740	154	150	3.0%	5.58	0.0267	0.0267	1.50	1.50	G	dP/P excursion, non-shifted	17	37
740	154	150	4.5%	6.83	0.0267	0.0267	1.50	1.50	G	dP/P excursion, non-shifted	17	13
740	154	150	6.0%	7.89	0.0267	0.0267	1.50	1.50	G	dP/P excursion, non-shifted	17	28
740	154	150	4.5%	6.83	0.0302	0.0302	1.70	1.70	G,P	profile	17	16-21

Table VI - 9 Climb (De-rated) Test Conditions Fuel Shifting Sector Rig Plenum Fed Configuration

The series of tests with the reduced scale quench convoluted liner/quench plate combustor in a diffuser fed configuration began as build 2a on March 10, 1998 and completed testing on April 7, 1998. Warmflow checkout was conducted as run FSR018. Emissions tests of this configuration were recorded as runs FSR019 through FSR024. These test points are documented in Table VI - 10 through Table VI - 13.

T3	P3	P3.2	dP/P total	Wa total	f/a oa	f/a oa	$\phi_{r,1}$	$\phi_{r,2}$	emissions	comment	Run	Pts	Run	Pts
(F)	(psia)	(psia)	(%)	(pps)		probe weighted							Build 2 Reference	
295	45	44	4.5%	2.52	0.0095	0.0095	0.60	0.60	G	f/a excursion	24	4	11	9
295	45	44	4.5%	2.52	0.0104	0.0104	0.65	0.65	G	f/a excursion	24	5	11	10
295	45	44	4.5%	2.52	0.0111	0.0111	0.68	0.68	G	f/a excursion	24	7		
295	45	44	4.5%	2.52	0.0112	0.0112	0.68	0.68	G	f/a excursion	24	8		
295	45	44	4.5%	2.52	0.0113	0.0113	0.68	0.68	G	f/a excursion	24	6		
295	45	44	4.5%	2.52	0.0119	0.0119	0.70	0.70	G,P	f/a excursion	24	10-17		
295	45	44	4.5%	2.52	0.0125	0.0125	0.75	0.75	G	f/a excursion	24	9	11	11
295	45	44	4.5%	2.52	0.0155	0.0155	0.95	0.95	G	f/a excursion	24	18		
295	45	44	4.5%	2.52	0.0162	0.0163	1.00	1.00	G	f/a excursion	24	19	11	20
295	45	44	4.5%	2.52	0.0175	0.0175	1.10	1.10	G	f/a excursion	24	20	11	21
295	45	44	4.5%	2.52	0.0184	0.0184	1.20	1.20	G	f/a excursion	24	21		
295	45	44	4.5%	2.52	0.0196	0.0196	1.25	1.25	G	f/a excursion	24	22		
295	45	44	4.5%	2.52	0.0219	0.0219	1.45	1.45	G	f/a excursion	24	23		
295	45	44	4.5%	2.52	0.0235	0.0235	1.55	1.55	G	f/a excursion	24	24		
295	45	44	4.5%	2.52	0.0255	0.0255	1.60	1.60	G	f/a excursion	24	25		
295	45	44	4.5%	2.52	0.0262	0.0262	1.75	1.75	G	f/a excursion	24	26		
295	45	44	4.5%	2.52	0.0278	0.0278	1.80	1.80	G	f/a excursion	24	28		
295	45	44	4.5%	2.52	0.0279	0.0280	1.90	1.90	G	f/a excursion	24	27		
295	45	44	4.5%	2.52	0.0293	0.0293	2.00	2.00	G	f/a excursion	24	29		
295	45	44	4.5%	2.52	0.0122	0.0117	0.60	1.00	G	fuel shifting	24	31		
295	45	44	4.5%	2.52	0.0128	0.0119	0.50	1.20	G,P	fuel shifting	24	30,32-39		
295	45	44	4.5%	2.52	0.0117	0.0119	0.75	0.60	G	fuel shifting	24	40		
295	45	44	4.5%	2.52	0.0045	0.0036	0.00	0.65	G	fuel shifting	24	41		
295	45	44	4.5%	2.52	0.0051	0.0041	0.00	0.75	G	fuel shifting	24	42		
295	45	44	4.5%	2.52	0.0058	0.0046	0.00	0.85	G	fuel shifting	24	43		
295	45	44	4.5%	2.52	0.0137	0.0110	0.00	2.00	G	fuel shifting	24	44		
295	45	44	4.5%	2.52	0.0038	0.0046	0.55	0.00	G	fuel shifting	24	46		
295	45	44	4.5%	2.52	0.0044	0.0053	0.60	0.00	G	fuel shifting	24	47		
295	45	44	4.5%	2.52	0.0050	0.0060	0.70	0.00	G	fuel shifting	24	48		
295	45	44	4.5%	2.52	0.0055	0.0066	0.80	0.00	G	fuel shifting	24	49		
295	45	44	4.5%	2.52	0.0063	0.0076	0.90	0.00	G	fuel shifting	24	50		
295	45	44	4.5%	2.52	0.0069	0.0083	1.00	0.00	G	fuel shifting	24	51		
295	45	44	4.5%	2.52	0.0077	0.0092	1.05	0.00	G	fuel shifting	24	52		
295	45	44	4.5%	2.52	0.0084	0.0101	1.20	0.00	G	fuel shifting	24	53		
295	45	44	4.5%	2.52	0.0091	0.0109	1.35	0.00	G	fuel shifting	24	54		
295	45	44	4.5%	2.52	0.0096	0.0115	1.40	0.00	G	fuel shifting	24	55		
295	45	44	4.5%	2.52	0.0098	0.0118	1.45	0.00	G	fuel shifting	24	45		
295	45	44	4.5%	2.52	0.0104	0.0125	1.55	0.00	G	fuel shifting	24	56		
295	45	44	4.5%	2.52	0.0113	0.0135	1.60	0.00	G	fuel shifting	24	57		
295	45	44	4.5%	2.52	0.0123	0.0148	1.80	0.00	G	fuel shifting	24	58		
295	45	44	4.5%	2.52	0.0129	0.0155	1.90	0.00	G	fuel shifting	24	59		
295	45	44	4.5%	2.52	0.0134	0.0161	2.00	0.00	G	fuel shifting	24	60		
295	45	44	4.5%	2.52	0.0141	0.0169	2.10	0.00	G	fuel shifting	24	61		
295	45	44	4.5%	2.52	0.0155	0.0186	2.60	0.00	G	fuel shifting	24	62		

Table VI - 10 Idle Test Conditions Fuel Shifting Sector Rig Diffuser Fed Configuration

T3	P3	P3.2	dP/P total	Wa total	f/a oa	f/a oa	$\phi_{r,1}$	$\phi_{r,2}$	emissions	comment	Run	Pts	Run	Pts
(F)	(psia)	(psia)	(%)	(pps)		probe weighted							Build 2 Reference	
588	134	131	4.5%	6.70	0.0062	0.0062	0.40	0.40	G	f/a excursion	19 20	5 7	15	12
588	134	131	4.5%	6.59	0.0079	0.0079	0.50	0.50	G	f/a excursion	19 20 21	6 8 5	15	13
588	134	131	4.5%	6.47	0.0096	0.0096	0.60	0.60	G	f/a excursion	19 20 22	7 9 48	15	14
588	134	131	4.5%	6.36	0.0114	0.0114	0.70	0.70	G	f/a excursion	19 20	8 10	15	15
588	134	131	4.5%	6.10	0.0185	0.0185	1.10	1.10	G	f/a excursion	19 20	9 11	15	17
588	134	131	4.5%	6.17	0.0199	0.0199	1.20	1.20	G	f/a excursion	19 20	10 12		
588	134	131	4.5%	6.25	0.0212	0.0212	1.30	1.30	G	f/a excursion	19 20	11 13	15	18
588	134	131	4.5%	6.32	0.0225	0.0225	1.40	1.40	G	f/a excursion	20	14	15	19
588	134	131	4.5%	6.40	0.0238	0.0238	1.50	1.50	G	f/a excursion	20	15	15	20
588	134	131	4.5%	6.47	0.0250	0.0250	1.60	1.60	G	f/a excursion	20	16	15	21
588	134	131	4.5%	6.55	0.0261	0.0261	1.70	1.70	G	f/a excursion	20	17	15	22
588	134	131	4.5%	6.70	0.0283	0.0283	1.90	1.90	G	f/a excursion	20	18	15	24
588	134	131	4.5%	6.81	0.0196	0.0225	2.55	0.40	G	fuel shifting, nominal	21	6	15	63-70
588	134	131	4.5%	6.72	0.0173	0.0196	1.95	0.40	G	fuel shifting, nominal	21	11		
588	134	131	4.5%	6.70	0.0196	0.0222	2.35	0.50	G,P	fuel shifting, nominal	20	36-43	15	73-80
588	134	131	4.5%	6.59	0.0176	0.0196	1.84	0.50	G,P	fuel shifting, nominal	22	7-14		
588	134	131	4.5%	6.47	0.0179	0.0196	1.74	0.60	G,P	fuel shifting, nominal	22	15-22		
588	134	131	4.5%	6.45	0.0196	0.0214	1.95	0.70	G	fuel shifting, nominal	22	23	15	86-93
588	134	131	4.5%	6.35	0.0182	0.0196	1.64	0.70	G,P	fuel shifting, nominal	22	24-31		
588	134	131	4.5%	6.63	0.0196	0.0173	0.50	2.00	G,P	fuel shifting, nominal	20 22	20-27 32-39	15	37-44
588	134	131	4.5%	7.63	0.0193	0.0173	0.60	2.05	G,P	fuel shifting, nominal	20	29-35		
588	134	131	4.5%	6.45	0.0216	0.0196	0.70	1.96	G,P	fuel shifting, nominal	22	40-46		
588	134	131	4.5%	6.38	0.0196	0.0179	0.70	1.71	G	fuel shifting, nominal	22	47	15	50-57

Table VI - 11 Approach Test Conditions Fuel Shifting Sector Rig Diffuser Fed Configuration

T3	P3	P3.2	dP/P total	Wa total	f/a oa	f/a oa	$\phi_{r,1}$	$\phi_{r,2}$	emissions	comment	Run	Pts	Run	Pts
(F)	(psia)	(psia)	(%)	(pps)		probe weighted							Build 2 Reference	
630	80	78	4.5%	3.92	0.0062	0.0062	0.40	0.40	G	f/a excursion	23	6	16	5
630	80	78	4.5%	3.86	0.0079	0.0079	0.50	0.50	G	f/a excursion	23	5	16	6
630	80	78	4.5%	3.79	0.0096	0.0096	0.60	0.60	G	f/a excursion	23	4	16	7
630	80	78	4.5%	3.72	0.0114	0.0114	0.70	0.70	G	f/a excursion	23	7	16	8
630	80	78	4.5%	3.66	0.0132	0.0132	0.80	0.80	G	f/a excursion	23	8	16	9
630	80	78	4.5%	3.61	0.0199	0.0199	1.20	1.20	G,P	f/a excursion	23	9-12	17	45-52
630	80	78	4.5%	3.66	0.0212	0.0212	1.30	1.30	G	f/a excursion	23	13	16	10
630	80	78	4.5%	3.75	0.0238	0.0238	1.50	1.50	G	f/a excursion	23	14	16	12
630	80	78	4.5%	3.80	0.0246	0.0246	1.55	1.55	G	f/a excursion	23	15,16		
630	80	78	4.5%	3.88	0.0272	0.0272	1.80	1.80	G	f/a excursion	23	17	16	15
630	80	78	4.5%	3.97	0.0293	0.0293	2.00	2.00	G	f/a excursion	23	18	16	17
630	80	78	4.5%	3.97	0.0211	0.0241	2.90	0.40	G	fuel shifting, nominal	23	19	16	56-63
630	80	78	4.5%	3.94	0.0186	0.0211	2.20	0.40	G	fuel shifting, nominal	23	20		
630	80	78	4.5%	3.91	0.0211	0.0237	2.60	0.50	G,P	fuel shifting, nominal	23	21-28	16	66-73
630	80	78	4.5%	3.87	0.0189	0.0211	2.07	0.50	G,P	fuel shifting, nominal	23	29-36		
630	80	78	4.5%	3.80	0.0192	0.0211	1.95	0.60	G,P	fuel shifting, nominal	23	37-44		
630	80	78	4.5%	3.77	0.0211	0.0231	2.17	0.70	G	fuel shifting, nominal	23	45	16	79-86
630	80	78	4.5%	3.73	0.0195	0.0211	1.83	0.70	G,P	fuel shifting, nominal	23	46-53		
630	80	78	4.5%	3.91	0.0211	0.0184	0.50	2.60	G,P	fuel shifting, nominal	23	54-61	16	30-37
630	80	78	4.5%	3.77	0.0211	0.0192	0.70	2.17	G	fuel shifting, nominal	23	62	16	43-50

Table VI - 12 Subsonic Cruise Test Conditions Fuel Shifting Sector Rig Diffuser Fed Configuration

T3	P3	P3.2	dP/P total	Wa total	f/a oa	f/a oa	$\phi_{r,1}$	$\phi_{r,2}$	emissions	comment	Run	Pts	Run	Pts
(F)	(psia)	(psia)	(%)	(pps)		probe weighted							Build 2 Reference	
740	154	150	4.5%	7.19	0.0062	0.0062	0.40	0.40	G	f/a excursion	21	28	17	8
740	154	150	4.5%	7.07	0.0079	0.0079	0.50	0.50	G	f/a excursion	21 22	27 49	17	9
740	154	150	4.5%	6.95	0.0096	0.0096	0.60	0.60	G	f/a excursion	21 22	29 50	17	10
740	154	150	4.5%	6.83	0.0114	0.0114	0.70	0.70	G	f/a excursion	22	51	17	11
740	154	150	4.5%	6.71	0.0132	0.0132	0.80	0.80	G	f/a excursion	22	52,53	17	12

Table VI - 13 Climb (De-rated) Test Conditions Fuel Shifting Sector Rig Diffuser Fed Configuration

Post-test inspection of the combustion hardware showed TBC spallation on some of the convolutions of the rich zone liner of both modules. This was as anticipated based on previous experience with the convoluted liner and is probably due to the difficulties of plasma spray application of the bond coat and ceramic on this convoluted shape with its narrow passages leading into the quench region. No oxidation damage was observed on the underlying metal of the rich zone liner. Spallation of TBC was also apparent on the aft face of the quench plate in a couple of locations. Again, no oxidation damage was observed on the underlying metal of the quench plate.

Discussion of Combustor Test Results

Fuel shifting sector rig test points included HSCT cycle operating conditions as well as parametric excursions from those conditions. The combustor emissions, efficiency, and exit temperature profile factor were the focus of the work. In addition, lean blow out tests were conducted. The performance characteristics included in this report were for the reduced-scale-quench technology. To facilitate simple

quantification of the value of fuel shiftedness applied to the combustor without having to specify each module's equivalence ratio and overall fuel air ratio, a parameter was developed as follows:

$$\%Shifted = \frac{(\Phi_1)(\%B_1)}{\left(\Phi_{us}/2\right)} - 2(\%B_1)$$

where Φ_1 is the equivalence ratio of module 1, the OD Module, Φ_{us} is the effective equivalence ratio of the front end at the specified overall engine fuel/air ratio without any fuel shifting applied, un-shifted mode (typically calculated based just on the split of rich zone airflow relative to the overall combustor airflow) and $\%B_1$ is the percent of combustor airflow designated to flow through module 1 relative to the overall combustor airflow. By convention, $\%Shifted < 1$ is defined as the ID module operating rich while $\%Shifted > 1$ is defined as the OD module operating rich Therefore, for a given value of overall fuel/air ratio and a single *%Shifted* value and based on the known geometric properties of the combustor design for rich zone split and %airflow to each module of the combustor, the individual equivalence ratios, and fuel flows, of each zone can be calculated.

Carbon/Oxygen Balance Check

Typically, a check is performed to verify that the fuel/air ratio as calculated from the integrated sample total carbon/oxygen concentration (emissions based fuel/air ratio) agrees with the estimate based on the combustor fuel/air ratio as determined from the input fuel flow meter and inlet venturi measurement (set point fuel/air ratio or metered fuel/air ratio). ICAO Annex 16 procedures require that these values agree to within +/- 15% at idle operating mode and +/- 10% at all other modes. Agreement signifies adequate sampling density to acquire an emissions sample representative of the entire combustor exit. This calculation was performed on all data acquired during the Fuel Shifting Sector Rig tests and the results are shown in Figure VI - 1. Most data acquired falls within the +/- 10% band as shown in the figure. The few outliers are mostly associated with very severe fuel shifted set points at the descent condition with the OD bank operating rich and the ID operating lean. This fuel shifting scenario is of less interest than the more probable reverse scenario with the ID operating rich and the OD operating lean at this condition so the outlying FARR values were not of much concern.

Plenum Fed Configuration

Subsonic Cruise

The subsonic cruise operating condition was tested at the specified inlet pressure and temperature and various fuel/air ratios for the plenum fed configuration of build 2. Tests were conducted in the uniform and fuel shifted modes.

All the emissions and performance goals were satisfied at this condition. The NO_x and CO data for both the uniform and fuel shifted modes are plotted in Figure VI - 2 and Figure VI - 3. Both modes produced NO_x emissions below the 10 Emission Index (EI) goal. The uniform mode produced the lowest NO_x at about 3 EI. In the fuel shifted mode, NO_x decreased as the amount of fuel shifting increased. There was no goal set for CO emissions, but the levels shown in Figure VI - 3 for both uniform and fuel shifted modes were acceptable. The uniform case produced the highest emissions at about 16 EI. Fuel shifting improved these emissions, but no clear relationship between CO and the amount of fuel shifting was identified. The levels of UHC were negligible as shown in Figure VI - 4. Finally, Figure VI - 5 shows that the combustor efficiency at subsonic cruise was above the goal of 99.0% in uniform and fuel shifted modes.

While it is most likely that an HSCT engine would be operated in a "both banks uniform" mode for the subsonic cruise condition, given the acceptable low NO_X and adequate efficiency demonstrated, it is interesting to assess the behavior of the combustor in a fuel shifted configuration to obtain insight into the combustion processes occurring within the combustor. Typical emissions profile data acquired at this condition for fuel shifted configurations are shown in Figure VI - 6 through Figure VI - 8. NO_x and CO

emissions are plotted in terms of the radially outward distance measured from the combustor inner wall (Radial span = 0%) to a point near the outer wall (Radial span = 100%).

In the case for the rich ID /lean OD condition, Figure VI - 6, as fuel was shifted from the OD module to the ID module, the ID module equivalence ratio increased from 2.0 to 2.4 while the OD module equivalence ratio decreased from 0.7 to 0.5. The NO_X profiles show that the ID module was unaffected by the increase in fuel flow, as would be expected since this combustor is operating in its rich-quench-lean mode which is typically less sensitive to fuel flow excursions, while the NO_X from the lean OD module decreased as it progressed further away from a stoichiometric value in the lean front end of that module. The CO emissions were relatively low for all of these conditions. However, a slight peak in CO was observed near the mid span between modules at the very severely shifted condition, 68% shifted ID rich. This peak in CO may signify a slight interaction and potential quenching of the CO to CO_2 reaction of the rich ID Module exhaust flow occurring at the interface between modules.

In the case for the rich OD /lean ID condition, Figure VI - 7, as fuel was shifted from the ID module to the OD module, the OD module equivalence ratio increased from 2.1 to 2.5 while the ID module equivalence ratio decreased from 0.7 to 0.4. The NO_X profiles show that the OD module was unaffected by the increase in fuel flow, again, as would be expected since this combustor is operating in its rich-quench-lean mode, while the NO_X from the lean ID module decreased as it progressed further away from a stoichiometric value in the lean front end of that module. The CO emissions were also relatively low for all of these conditions. No peak in CO was observed between modules for these conditions. However, a decrease in CO is observed as the ID module is operated further from stoichiometric. It is presumed that equilibrium CO was contributing to the higher CO emissions observed from the ID module for the 0.7 front end equivalence ratio of the 68% shifted OD rich condition. This behavior is repeated for the slightly lower fuel/air ratio conditions shown in Figure VI - 8.

65% Thrust LTO (Climb)

The inlet pressure under the 65% thrust LTO (climb) condition was greater than the maximum limit of the test facility. Pressure scaling was needed to estimate the emissions at the higher pressure from test points made at a lower pressure but at the specified inlet temperature and fuel/air ratio. The combustor was operated in the uniform mode during all the tests.

The variations in NO_x, CO, and UHC emissions with inlet pressure are shown in Figure VI - 9, Figure VI - 10, and Figure VI - 11, respectively, for the plenum fed configuration of build 2. NO_x varied with the inlet pressure to 0.35 power, while CO varied with the inlet pressure to the -0.44 power. These relationships were consistent with past observations. The UHC emissions were negligible across the range of pressures and therefore scaling was unnecessary. The emissions at the cycle operating condition were determined with the following equation:

$$\frac{X_{cond}}{X_{test}} = \left(\frac{p_{3,cond}}{p_{3,test}} \right)^k$$

where X_{cond} was the emission index of NO_x or CO at the condition inlet pressure, p_{cond} , X_{test} was the emission index at the test pressure, p_{test}, and k was the pressure coefficient determined from the pressure excursions.

Figure VI - 12 through Figure VI - 15 show the emissions and efficiency data for RSQ at the test pressure of 150 psia for the plenum fed configuration of build 2 and the estimated levels at the 65% LTO condition pressure of 212 psia. There was only a slight increase in NO_x when the levels were extrapolated from the data. The estimated level was just over 4 EI. The estimated level of CO was less than 2 EI based on the measurements acquired at the test pressure. Negligible UHC levels were measured under this condition. Efficiencies greater than 99.9% were found across the range of fuel/air ratios tested. The efficiency at the cycle operating condition was greater than 99.95%.

Profile data are shown in Figure VI - 16 for this condition in a uniform mode of operation at a fuel/air ratio of 0.026. As the data in these figures show, the exit emissions profiles of NO_X and CO for a

uniform mode of operation are very flat as would be expected from a reduced scale quench configuration of an RQL combustor.

34% Thrust LTO (Approach)

The 34% thrust LTO (approach) condition was tested at the specified inlet temperature, inlet pressure, and a range of fuel/air ratios in uniform, non-shifted as well as fuel-shifted modes including both ID rich and OD rich fuel shifting modes for the plenum fed configuration of build 2.

The emissions and performance data at the 34% thrust LTO condition are shown in Figure VI - 17 through Figure VI - 20. A uniform equivalence ratio between the ID and OD banks produced lower NO_x emissions than fuel shifted cases at fuel/air ratios above 0.020. This is similar behavior to that observed for the subsonic cruise conditions and is expected since both conditions are fairly close in inlet temperature, pressure and fuel/air ratio. In the case of CO, the uniform mode always produced the highest emissions. This condition begins to show the benefit that fuel shifting provides for reducing the CO emissions of an RQL combustor at moderate power conditions. UHC emissions were negligible. Commensurate with improvements in CO emissions, the combustor efficiency also improved with fuel shifting. Engine control logic would dictate that at this power level (inlet temperature and fuel/air ratio), the combustor should be operated in a fuel shifting mode that is 30% fuel shifted with a rich OD module. Interpolating/extrapolating the acquired data set for this fuel shifting scenario led to NO_x and CO emissions of 8 and 12 EI, respectively, and an efficiency of about 99.7 %.

The emissions profile data acquired using RSQ with the ID module operating rich are shown in Figure VI - 21. The NO_x and CO emissions variations as a function of radial span across the two modules paralleled the trends observed at the subsonic cruise condition. That is, for an overall fuel/air of 0.017, as the lean OD module equivalence ratio was decreased further from a stoichiometric value, the NO_x emissions decreased. The CO emissions levels decreased slightly as the equivalence ratio in the lean OD module decreased from 0.7 to 0.5, (44% shifted ID Rich to 58% shifted ID Rich) and then increased when the equivalence ratio was decreased further to 0.4 (67% shifted ID Rich) showing the CO bucket of the lean OD module. Simultaneously, as the ID equivalence ratio was increased, NO_x increased slightly while CO decreased slightly.

Emissions profile results acquired during rich OD operation are displayed in Figure VI - 22 and Figure VI - 23 for overall fuel/air ratios of 0.022 and 0.019, respectively. The NO_x and CO emissions trends were similar to those observed at subsonic cruise. As the lean ID module was operated further from its stoichiometric value in the front end, both NO_x and CO emissions from this lean ID module improved while the rich OD module showed insensitivity of its emissions to changes in fuel air ratio.

The turbine inlet temperature profile factor was assessed with fuel shifting operation. The maximum radial profile factor is plotted as a function of percent fuel shifted in Figure VI - 24. The profile factor would be ID or OD peaked commensurate with shifting towards ID rich or OD rich configurations, respectively. A profile factor of less than 0.2 was predicted at the operating point determined by the engine control logic for this condition. Figure VI - 25 shows the profile factor as a function of percent radial span for the OD rich cases and the estimated cycle operating condition for this combustor. The profile curves decreased in magnitude with decreased fuel shifting as expected.

15% Thrust LTO (Descent)

The 15% thrust LTO (descent) condition was tested at the specified inlet pressure and temperature and a range of overall fuel/air ratios for the plenum fed configuration. Data was acquired for uniform and fuel shifted modes.

The emissions and efficiency data at this condition are shown in Figure VI - 26 through Figure VI - 29. NO_x emissions levels were highest in the uniform mode and decreased with increased fuel shifting as would be expected since at the overall fuel air ratio of 0.015, the module front ends are operating near stoichiometric equivalence ratios and would produce significant quantities of NO_X given the relatively long residence times associated with the front end "rich" zones of an RQL combustor. The CO emissions improved with fuel shifting as expected. However, there was no clear relationship between percent

shifted and emissions level. The UHC levels were once again low except for a few of the OD rich data points. These were the data associated with the poor FARR ratios discussed earlier. The efficiency behaved similarly to the CO emissions. Fuel shifting improved efficiency, but no obvious trend existed as a function of percent fuel shifting.

Emissions profiles at this condition and an overall fuel/air ratio of approximately 0.015 with a rich ID module are shown in Figure VI - 30. NO_x emissions profiles are similar to those observed previously. That is, as the module operating in the lean mode has its front end equivalence ratio reduced, the NO_X from that module decreases. The CO emissions levels peak at a span of approximately 40 - 50%, again implying a potential for interaction between modules potentially inhibiting the any CO to CO_2 oxidation that might be occurring in the exit transition zone at this relatively cool inlet temperature condition.

Results of combustor operation under rich OD conditions are displayed in Figure VI - 31 and Figure VI - 32, for fuel/air ratios of 0.018 and 0.016, respectively. These NO_x emissions results are also similar to those observed previously. As the lean ID module equivalence ratio decreased, the NO_x emissions levels decreased from that module. Concomitantly, the rich OD module NO_x emissions remained relatively constant. CO emission for the lean ID module appear to increase as its equivalence ratio is decreased, signifying that it was operating on the left portion of the CO bucket for that combustor while the CO emissions levels from the OD module decreased as the OD module fuel/air increased. Exit transition zone temperatures increased locally for that module as its fuel/air ratio was increased, enabling further CO oxidation to occur in that region of the exit transition zone.

The maximum radial temperature profile factor is plotted in Figure VI - 33 as a function of percent shifted. The profile factor became more severe with increased fuel shifting, as expected. The operating value of the maximum radial profile factor determined using engine control logic was just over 0.4, ID peaked. Figure VI - 34 shows the profile factor as a function of percent radial span for various fuel shifting configurations at this condition including a uniform configuration that highlights the different behavior between a uniform and fuel shifted configuration. The profile factor was peaked at the ID and steadily decreased to the OD.

5.8% LTO Thrust (Idle)

The 5.8% thrust LTO (idle) condition was tested at the specified inlet temperature, inlet pressure, and a range of fuel/air ratios for the plenum fed configuration. The combustor was only operated in the uniform mode.

The emissions and efficiency data at the 5.8% thrust LTO condition are shown in Figure VI - 35 through Figure VI - 38. The NO_x emissions were relatively insensitive to changes in the fuel/air ratio and peaked at only 3.5 EI. The CO emissions, on the other hand, increased with fuel/air ratio as the front end equivalence ratio increased towards a stoichiometric value and was about 50 EI at the cycle operating point. Finally, the UHC emissions were insensitive to changes in fuel/air ratio, remaining at only about 1 EI across the range of fuel/air ratios tested. Corresponding to the CO emissions, the efficiency decreased with increasing fuel/air ratio and was approximately 98.8% at the cycle operating point.

The high CO and low efficiency were attributed to the radial jet injector used in this combustor configuration. The injector used for these tests was an existing fuel injector from another engine and was designed for different operating conditions but was used in this rig to expedite testing. Inadequate penetration of the fuel to the filmer was the likely cause of the poor CO emissions and efficiency at the idle condition. Improvements would be expected with continued fuel injector development that would provide proper penetration of the fuel to the filmer at these low fuel flows.

Diffuser Fed Configuration

A single passage shallow angle diffuser was installed in the fuel shifting rig to provide a representative full-scale flow field and determine its effects on emissions. This rig build was designated as build 2a. A representative total pressure distribution across the radial span of the diffuser normalized with respect to the average is plotted in Figure VI - 39. The total pressure variation was minimal, not exceeding 0.4% at any point. This was as expected since the diffuser design was conservative and no attempt was made to

induce any inlet profiling since the purpose of these test was to investigate the impact of a diffuser flow field on an RQL with reduced scale quench and proper flow expansion from the pre-diffuser through the dump region was modeled with this flat profile diffuser.

34% LTO Thrust (Approach) with Diffuser

The tests of the 34% thrust LTO (approach) condition were repeated to determine diffuser effects on emissions and performance. Similar fuel/air ratio excursions and some fuel shifting conditions were repeated to make an assessment on the effects of a diffuser fed flow field on the emissions behavior. This condition was chosen since it is expected that this condition would be fuel shifted in engine operation and assessments could be made on the impact under fuel shifting operation.

The diffuser did not have a strong impact on the emissions, efficiency, or exit profiles of the combustor. The NO_x, CO, and UHC emissions for the diffuser fed combustor are plotted along with the plenum fed configuration in Figure VI - 40 through Figure VI - 42. The efficiency is shown in Figure VI - 43 the emissions profiles are shown in Figure VI - 44 and Figure VI - 45, and the temperature profile factor is shown in Figure VI - 46. Data comparisons from all these figures shows that the diffuser fed flow field had minimal impact on emissions and performance for this combustor configuration.

Subsonic Cruise with Diffuser

Tests were also conducted as subsonic cruise condition to assess the impact of the diffuser fed flow field. Comparisons were made with the plenum fed configuration and are shown in Figure VI - 47 through Figure VI - 55. Plots have been broken out for uniformly fueled conditions as well as fuel-shifted conditions to aid in the graphical comparison. As all of these figures show, the diffuser fed flow field had minimal impact on emissions and performance behavior at this subsonic cruise condition for both uniformly fueled as well as fuel-shifted scenarios. Any minor differences observed fall well within the range of standard deviations and error bands associated with typical day-to-day variability expected with combustor gaseous emissions tests.

65% Thrust LTO (Climb) with Diffuser

Tests were also conducted as the 65% thrust LTO (climb) condition to assess the impact of the diffuser fed flow field. Tests were conducted in a uniformly fueled mode with lean front end equivalence ratios since this would best highlight diffuser flowfield impacts from the long residence time "rich zones" operating in a lean mode. Comparisons were made with the plenum fed configuration and are shown in Figure VI - 56 through Figure VI - 58. NO_X emissions increased only slightly, with increases of approximately 2-3 EI with the diffuser fed flow field, potentially induced by a slightly less uniformly fed airflow into the radial inflow swirler. CO emissions and the corresponding combustor efficiencies were similar between the diffuser fed and plenum fed configurations.

5.8% Thrust LTO (Idle) with Diffuser

Tests were also conducted as the 5.8% thrust LTO (idle) condition to assess the impact of the diffuser fed flow field. Tests were conducted in a uniformly fueled mode with lean front end equivalence ratios as the combustor would normally be operated at this condition. Comparisons were made with the plenum fed configuration and are shown in Figure VI - 59 through Figure VI - 61. Emissions and performance behavior was very consistent between the two configurations at this condition.

Integrated LTO Airport Vicinity Emissions

Based on all of the data acquired above, an estimate of airport vicinity emissions was made for this reduced scale quench convoluted liner/quench plate combustor configuration with fuel shifting control technology. Since the facility was limited in inlet temperature and pressure, data for the climb condition was based on extrapolating results from 150 psia to 212 psia as previously discussed. Takeoff data was acquired at de-rated, reduced pressure of 150 psia from the integrated module rig testing a single module

of identical configuration (Ref. 4) and scaled accordingly to the cycle operating pressure. The results of estimates for integrated landing/takeoff cycle airport vicinity emissions are shown in Table VI - 14.

Operating Condition	Weighting Factor	NOx EI	CO EI	UHC EI	Efficiency (%)	Max. Profile Factor
Idle	0.305	3.5	49.5	0.80	98.76	-
Descent	0.029	3.3	31.0	0.10	99.26	0.45
Approach	0.109	7.5	12.1	0.01	99.71	0.15
Climb	0.179	4.3	1.5	0.01	99.96	-
Take-off	0.183	12.3	6.2	0.10	99.84	-
Integrated LTO		5.0	18.7	0.3		
Goal		<5.0	<7.8	<1.0		

Table VI - 14 Integrated LTO Airport Vicinity Emissions

Operability

Lean blow out (LBO) test data from the reduced scale quench RQL combustor are shown in Figure VI - 62. The inlet temperature was varied from 300°F to 800°F while the inlet pressure was varied along a simulated sea level operating line defined by the following equation:

$$p_3[psia] = 0.3135T_3[F] - 56$$

At the 800°F condition, inlet pressures were limited by the facility to 150 psia. In addition LBO was assessed at 75 psia at the 650°F condition to assess operability at the subsonic cruise condition. In each case, the front end equivalence ratio was stabilized at ϕ=0.5 and then reduced until LBO was observed.

From about 400°F and below, LBO occurred around ϕ=0.3. Above this temperature, LBO was not observed within the range that the fuel control was able to adequately control the fuel flow or the fuel flow meters could reliable measure. Instead, a distinct change in the flame structure was observed. This occurred, in most cases, between ϕ=0.2 and 0.3. At T3=800°F and p3=150 psia, there was no change in flame structure observed over the entire range of ϕ tested.

Section VII - Conclusions

The low emissions potential of a Rich-Quench-Lean (RQL) combustor for use in the High Speed Civil Transport (HSCT) application was demonstrated. Fuel Shifting as an approach to combustor control was successfully evaluated in a multiple bank Rich-Quench-Lean combustor, utilizing reduced scale quench technology implemented in a convoluted liner with quench plate concept. The use of this control technique significantly reduces the risk associated with RQL combustors by eliminating the need for a variable geometry mechanism to control combustor airflow while still maintaining low emissions, good performance and operability throughout the operating envelope.

Specifically:

1. NO_X emissions of 3.5 EI at subsonic cruise were demonstrated in a non-fuel shifted mode of operation and satisfy the HSCT Combustor Requirement of less than 10 EI.
2. Combustion efficiency of 99.6% at subsonic cruise were demonstrated in a non-fuel shifted mode of operation and satisfy the HSCT Combustor Requirement of greater than 99%.
3. NO_X emissions throughout the airport vicinity conditions tested were low in fuel shifted as well as uniformly fueled modes.
4. CO emissions benefited from fuel shifting at descent and approach conditions with minimal, acceptable increases in NO_X emissions at those conditions relative to a uniformly fueled mode.
5. Radial profiles observed from fuel shifting were moderate and would be anticipated to occur primarily at moderate to low engine power levels.
6. In a fuel shifted mode, NO_X emissions for the rich operating module were insensitive to fuel/air ratio perturbations.
7. In a fuel shifted mode, CO emissions for the rich operating module were insensitive to fuel/air ratio perturbations at high inlet temperature conditions. At low inlet temperature conditions, the higher fuel/air ratios aided the oxidation of the CO produced in the rich zone by raising the exit transition zone temperature locally in the region downstream of this module.
8. In a fuel shifted mode, NO_X emissions for the lean operating module increased as the module's equivalence ratio approached stoichiometric conditions; increases observed for equivalence ratios of greater than or equal to 0.6.
9. In a fuel shifted mode, CO emissions for the lean operating module increased as the module's equivalence ratio approached a stoichiometric conditions; increases observed for equivalence ratios of greater than or equal to 0.6.
10. Excellent operability was observed with LBO at front end equivalence ratio's of 0.3 or below.

References

1. The Atmospheric Effects of Stratospheric Aircraft: A Fourth Program Report, NASA Reference Publication 1359, January 1995

2. Rosfjord, T. J. and Padget, F. C., Experimental Assessment of the Rich/Quench/Lean Combustor for High Speed Civil Transport Aircraft Engines, Final Report on Task 3 of NASA Contract NAS3-25952, December 1995.

3. Cohen, J. M. and Rosfjord, T. J., Influences on the Sprays Formed by High Shear Fuel Nozzle/Swirler Assemblies, Journal of Propulsion and Power, AIAA, Vol. 9, No. 1, 1993.

4. Siskind, K. S. et. al., Reduced Scale Quench Integrated Module Rig Test - Complete Reduced Scale Quench Integrated Module Rig Test - MT410277, Informal Test Report NASA Contract NAS3-27235, August 1997.

5. Spindt, R. S., Air-Fuel Ratios from Exhaust Gas Analysis, SAE Paper 650507, Jan, 1965.

Section II Figures

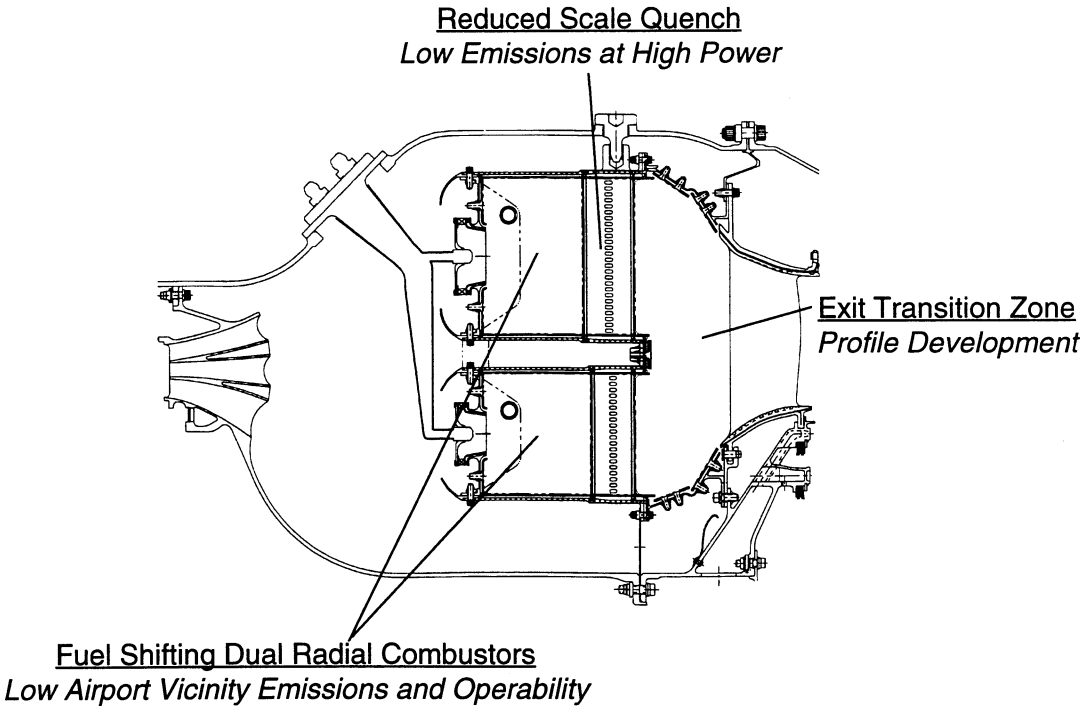

Figure II - 1 Rich-Quench-Lean HSCT Combustor Concept with Reduced Scale Quench and Fuel Shifting Technology

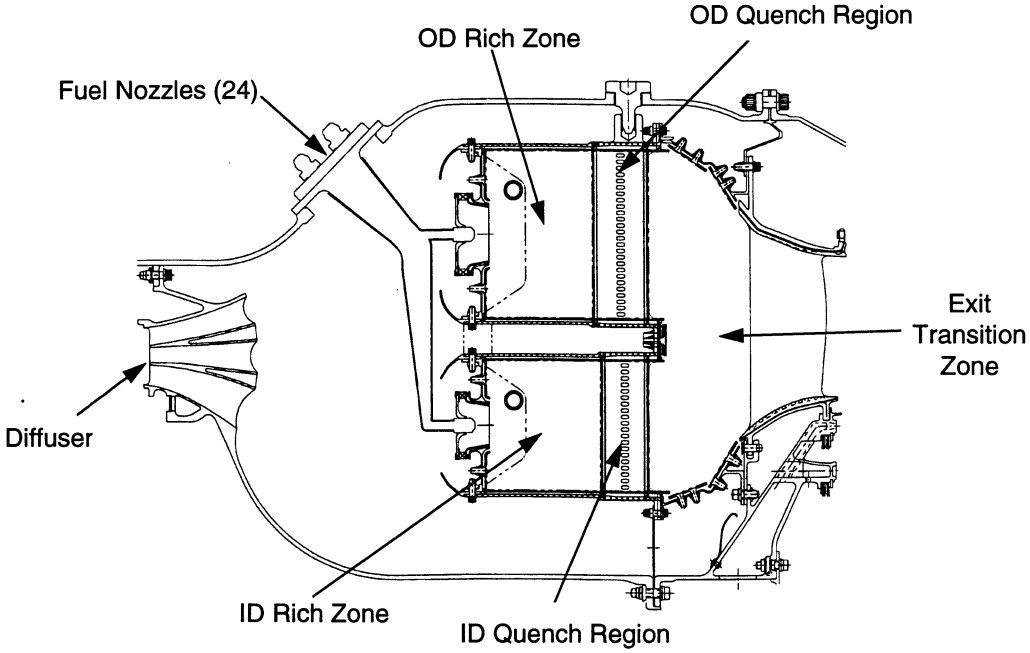

Figure II - 2 Rich-Quench-Lean HSCT Combustor

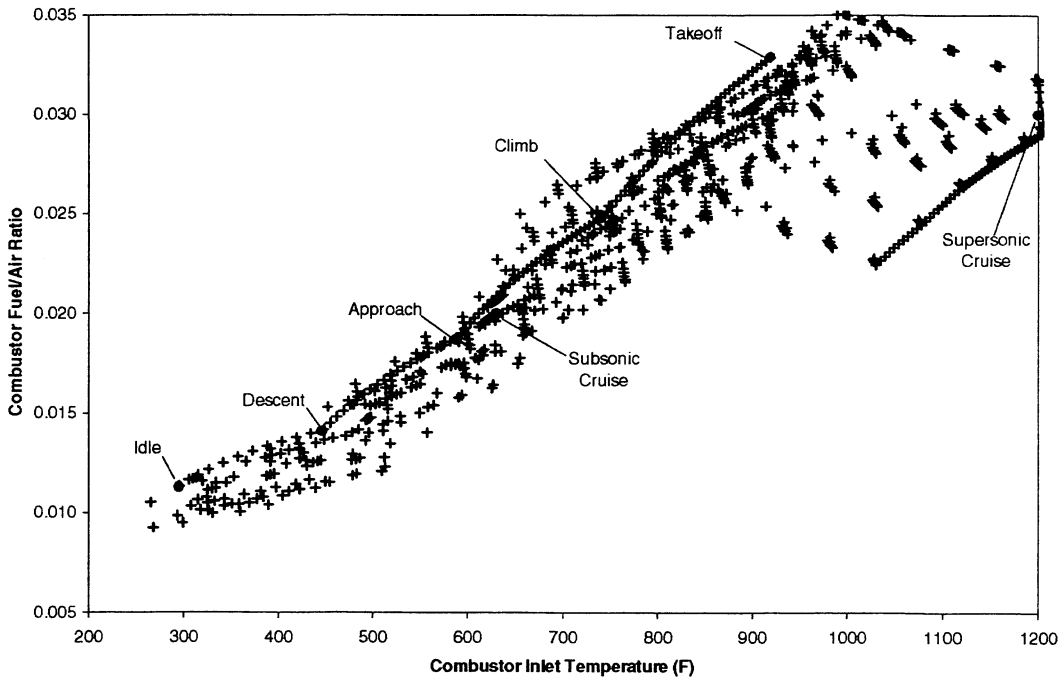

Figure II - 3 HSCT MFTF 3770.54 Combustor Operating Envelope (Fuel/Air ratio vs Inlet Temperature)

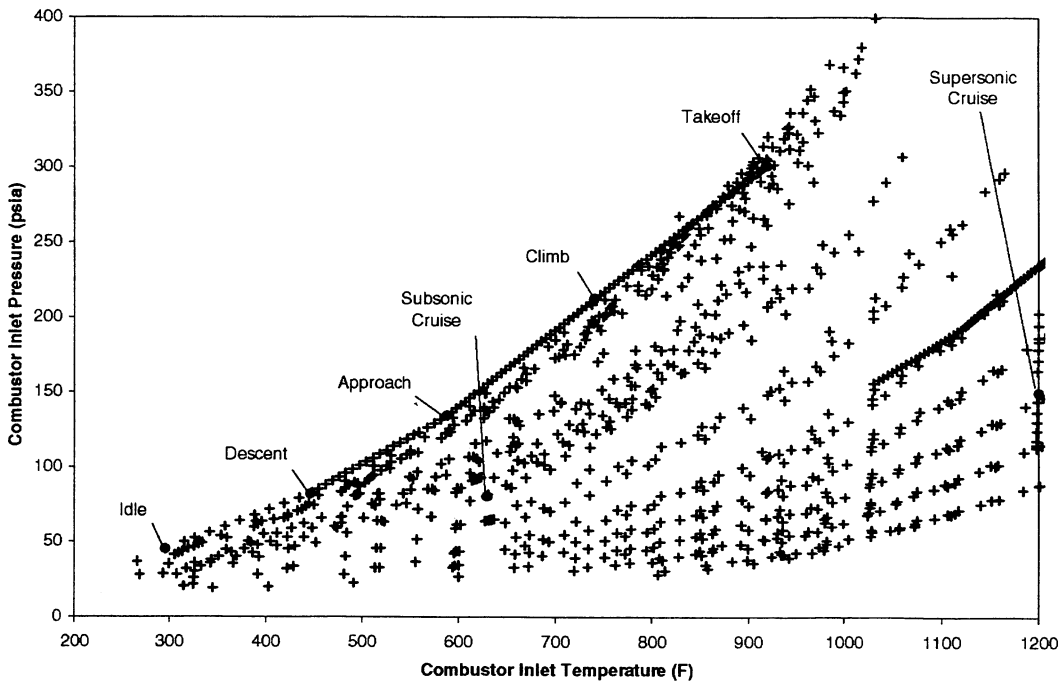

Figure II - 4 HSCT MFTF 3770.54 Combustor Operating Envelope (Inlet Pressure vs Inlet Temperature)

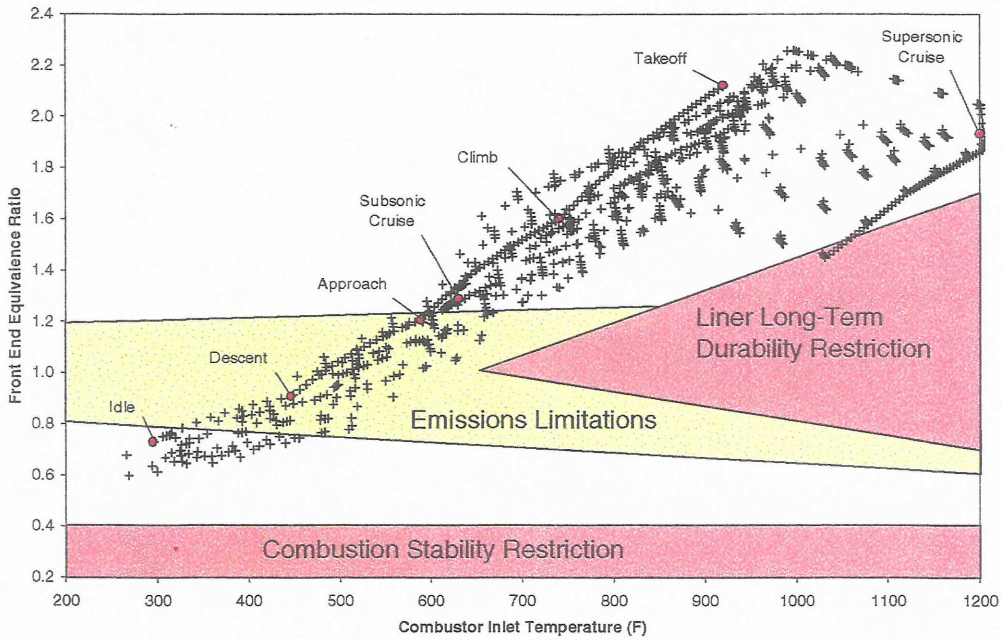

Figure II - 5 Rich Zone Stoichiometry for a Fixed Geometry RQL Combustor with Conventional Fuel System (23% rich zone, 72% quench zone, 5% lean zone cooling)

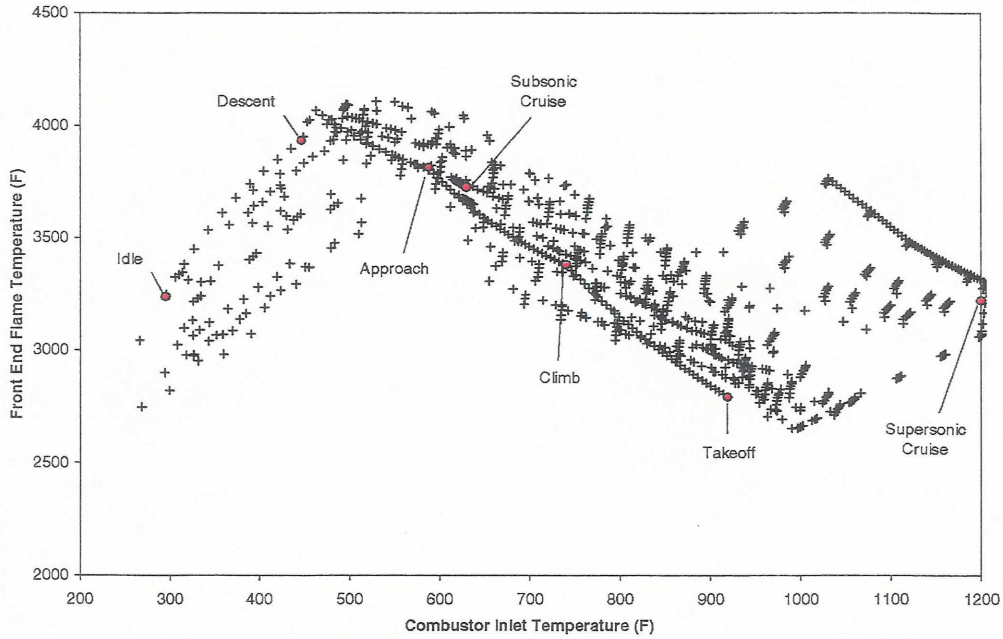

Figure II - 6 Front End Flame Temperatures for a Fixed Geometry RQL Combustor with Conventional Fuel System

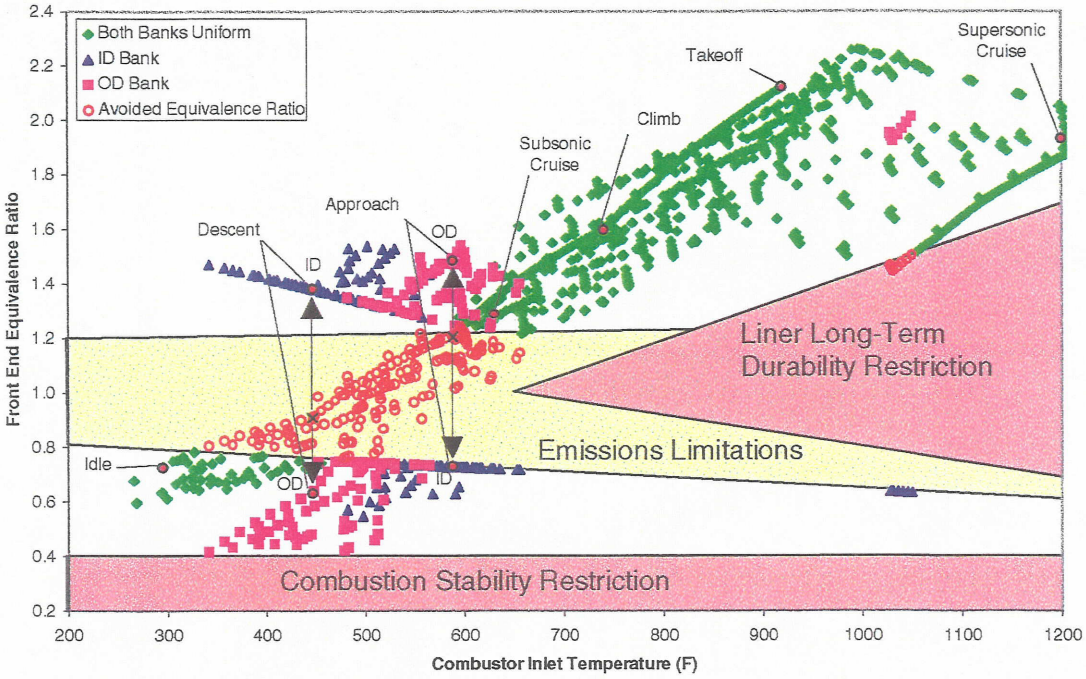

Figure II - 7 Rich Zone Stoichiometry for a Fuel-Shifted Two-Bank RQL Combustor (23% rich zone, 72% quench zone, 5% lean zone cooling; 37%/67% ID/OD bank split)

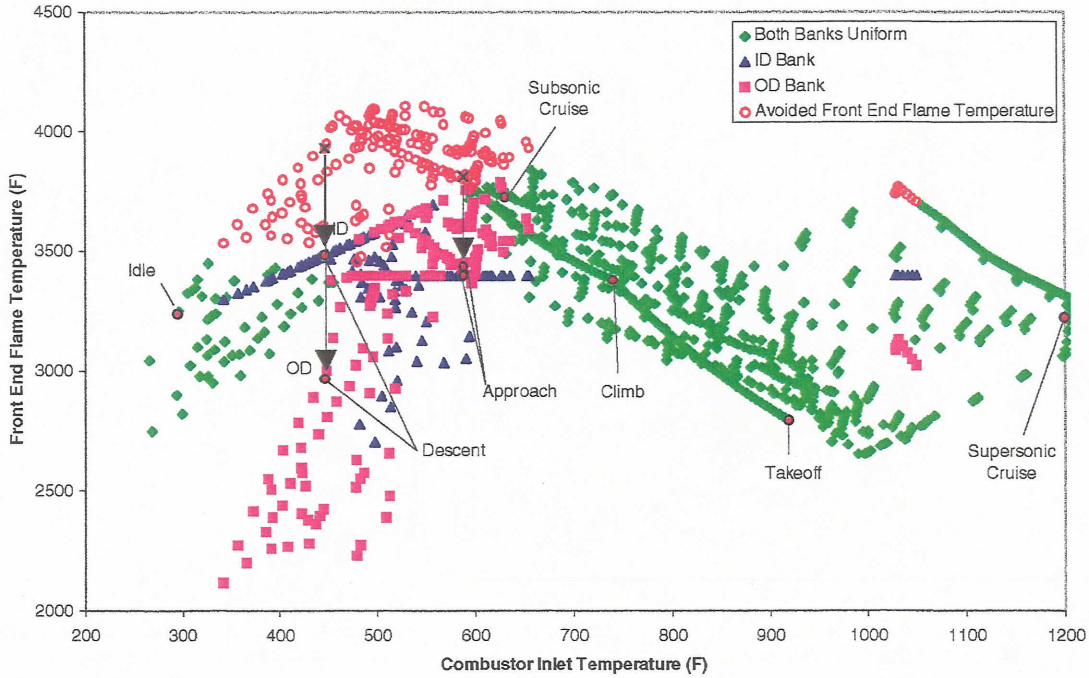

Figure II - 8 Front End Flame Temperatures for a Fuel-Shifted Two-Bank RQL Combustor

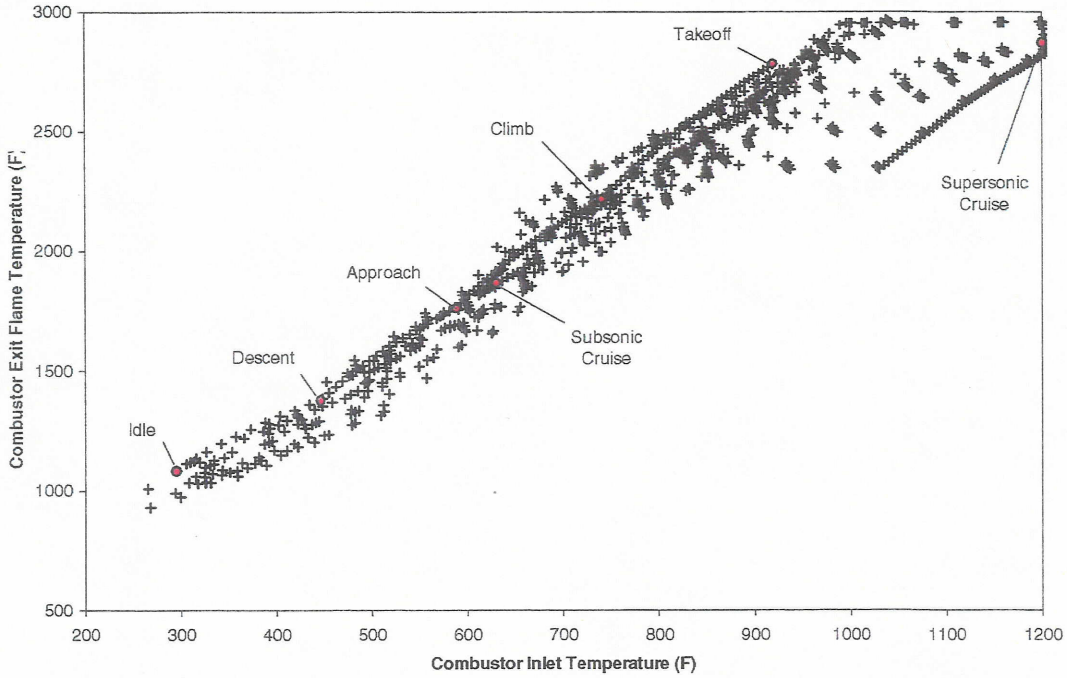

Figure II - 9 Combustor Exit Temperatures for a Fixed Geometry RQL Combustor with Conventional Fuel System

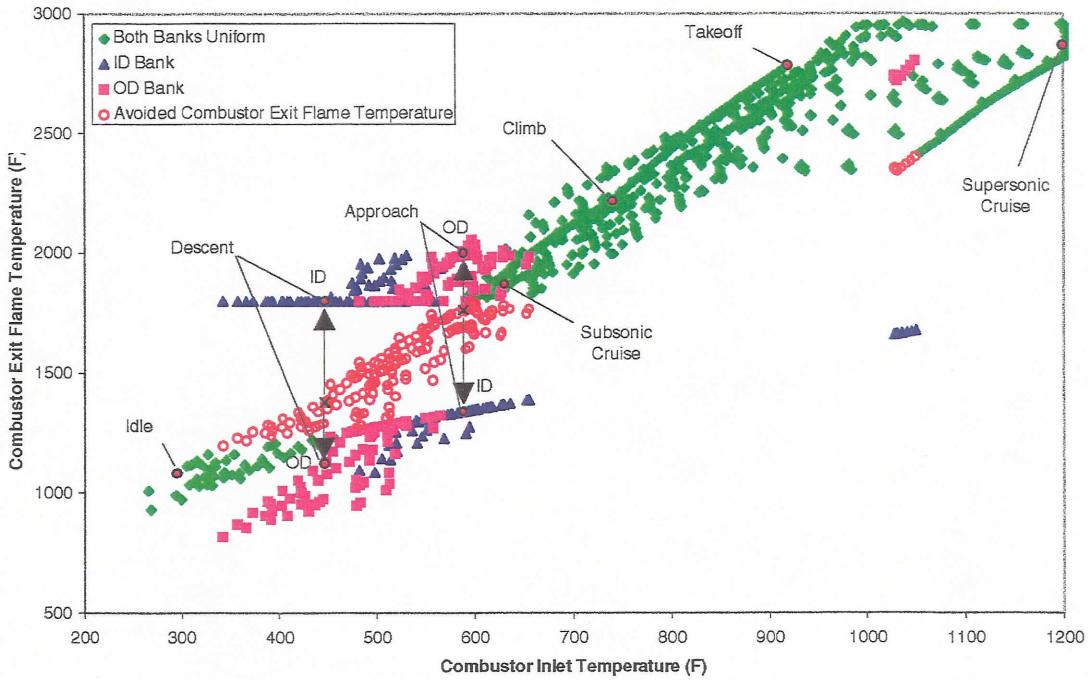

Figure II - 10 Combustor Exit Temperatures for a Fuel-Shifted Two-Bank RQL Combustor

Section III Figures

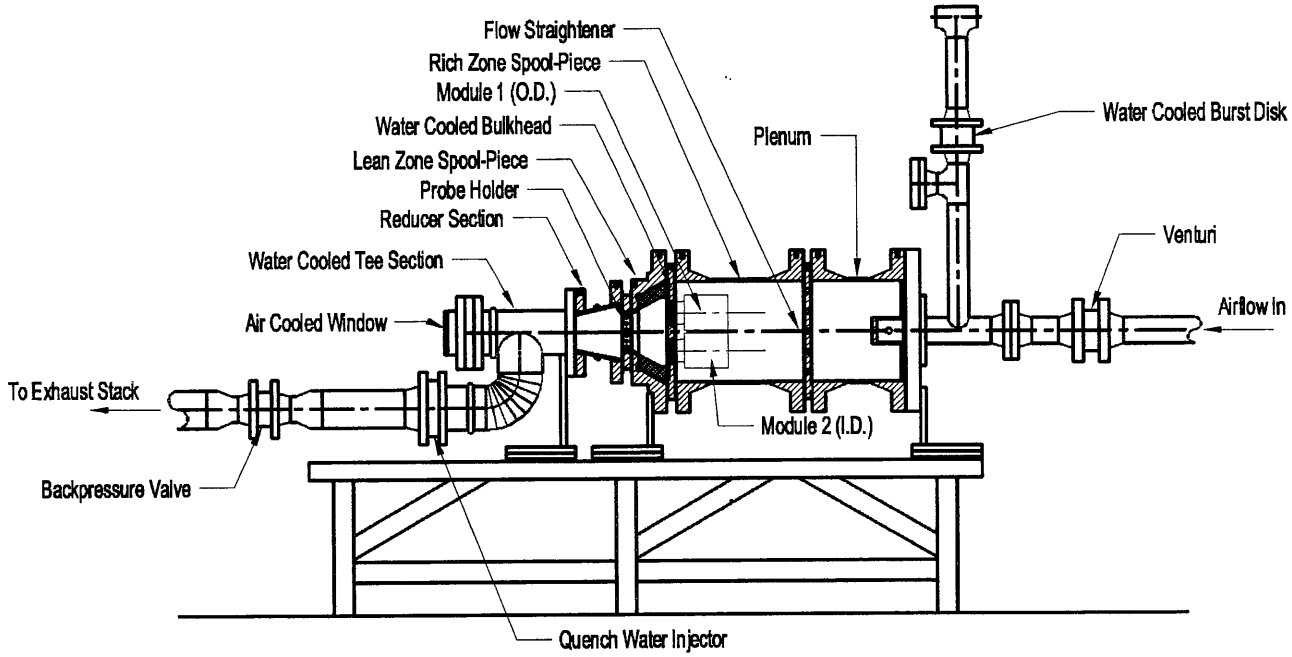

Figure III - 1 Fuel Shifting Sector Rig Layout

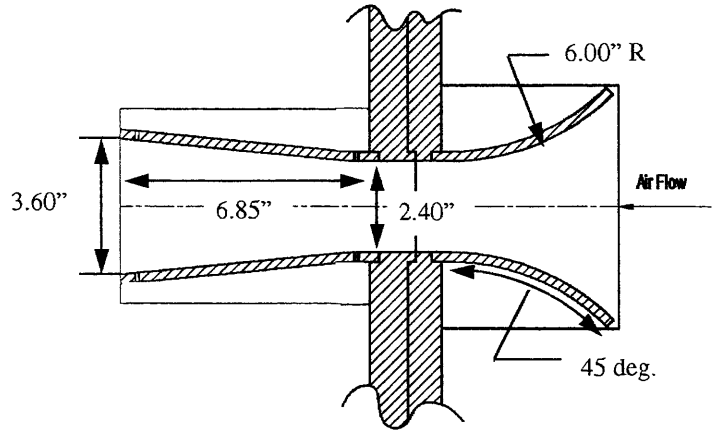

Figure III - 2 Single Passage Rectangular Pre-Diffuser Design to Assess Impact of Diffuser Fed Flowfield on Emissions, Performance and Profiles

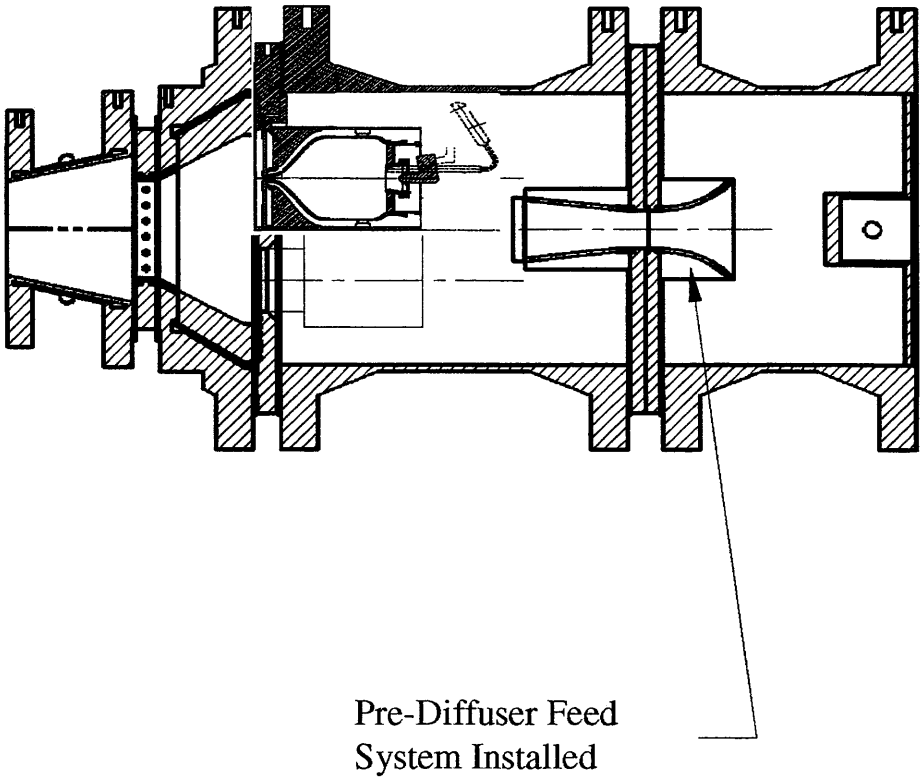

Figure III - 3 Fuel Shifting Sector Rig Layout with Pre-Diffuser Installed Replacing Flow Straightener

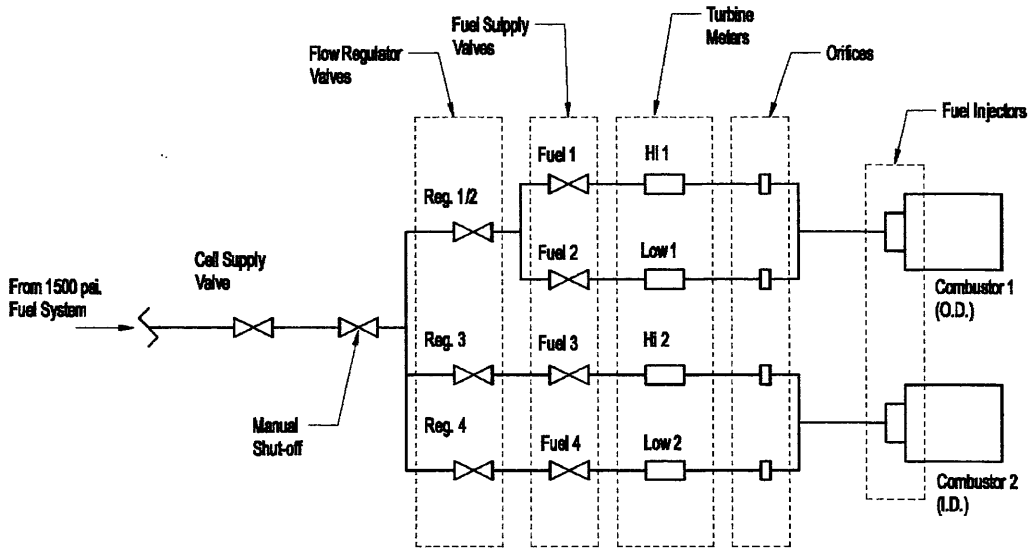

Figure III - 4 Fuel Shifting Sector Rig Fuel Delivery System

Section IV Figures

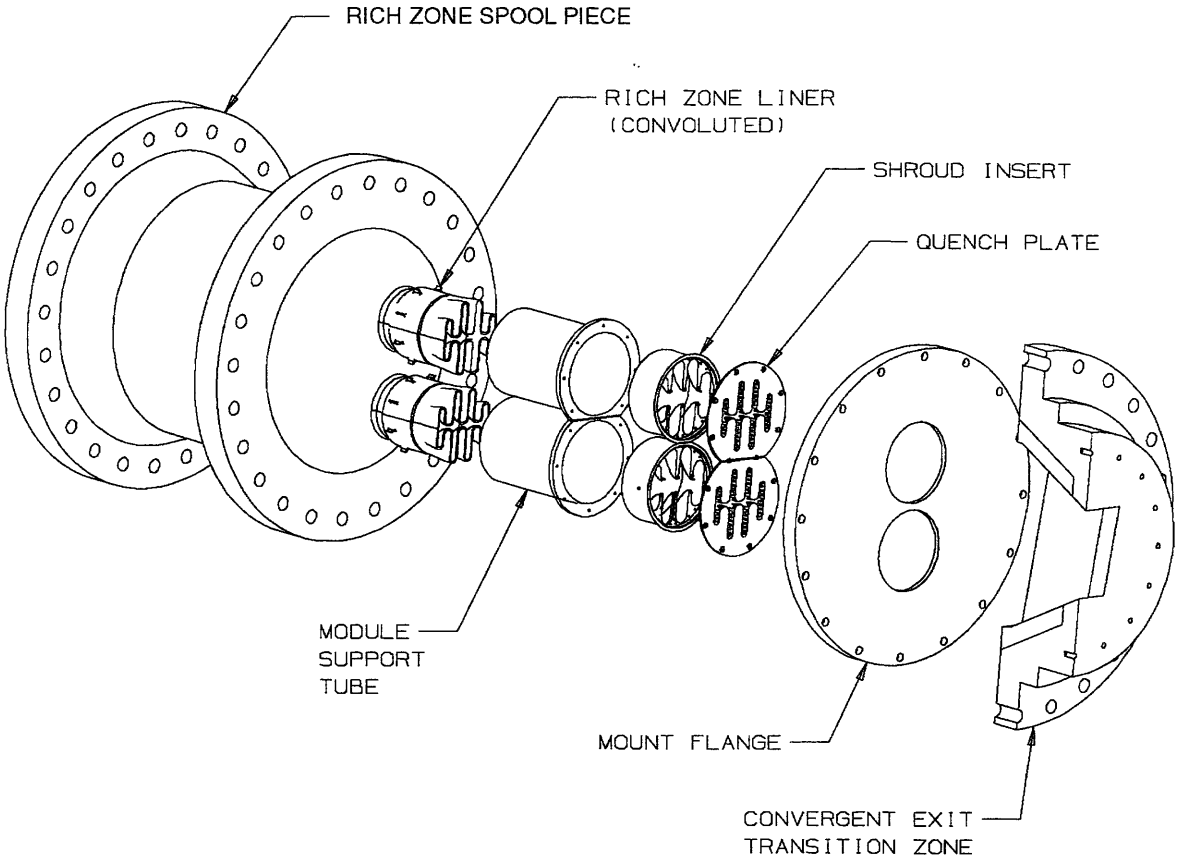

Figure IV - 1 Fuel Shifting Sector Rig Combustor Test Section

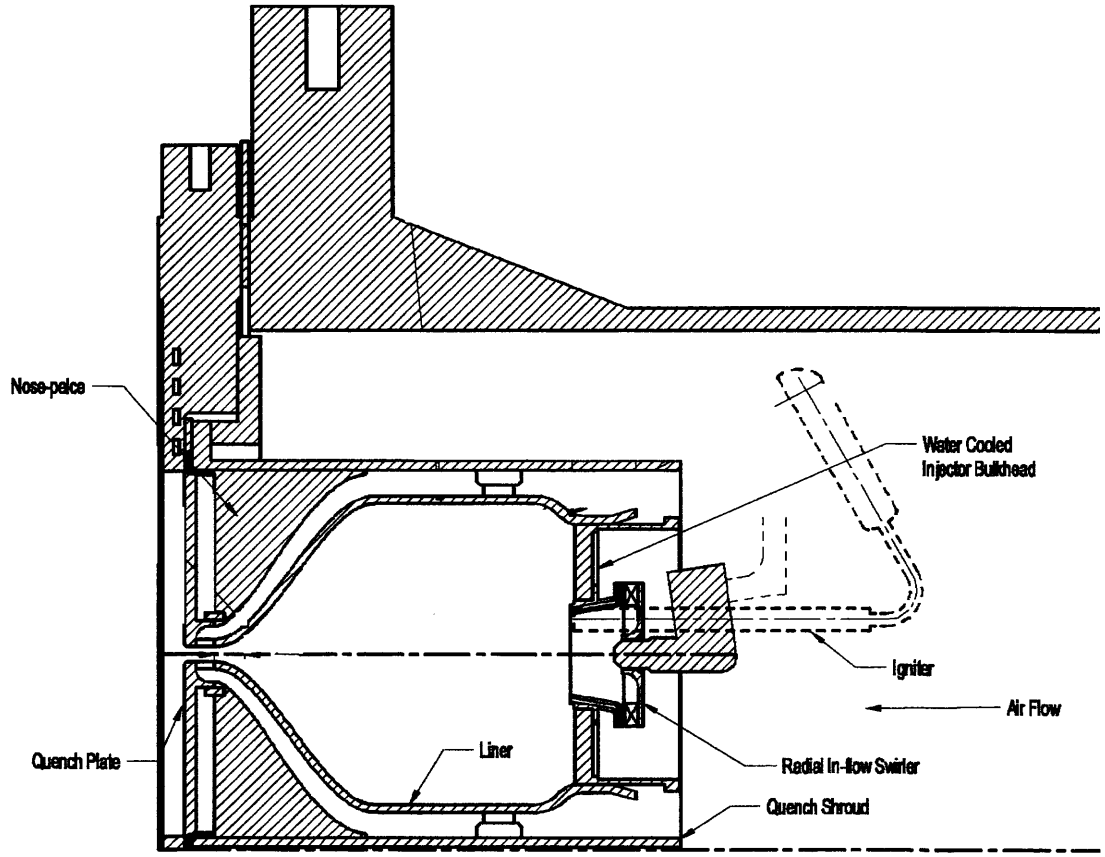

Figure IV - 2 Rich-Quench Module Cross Section

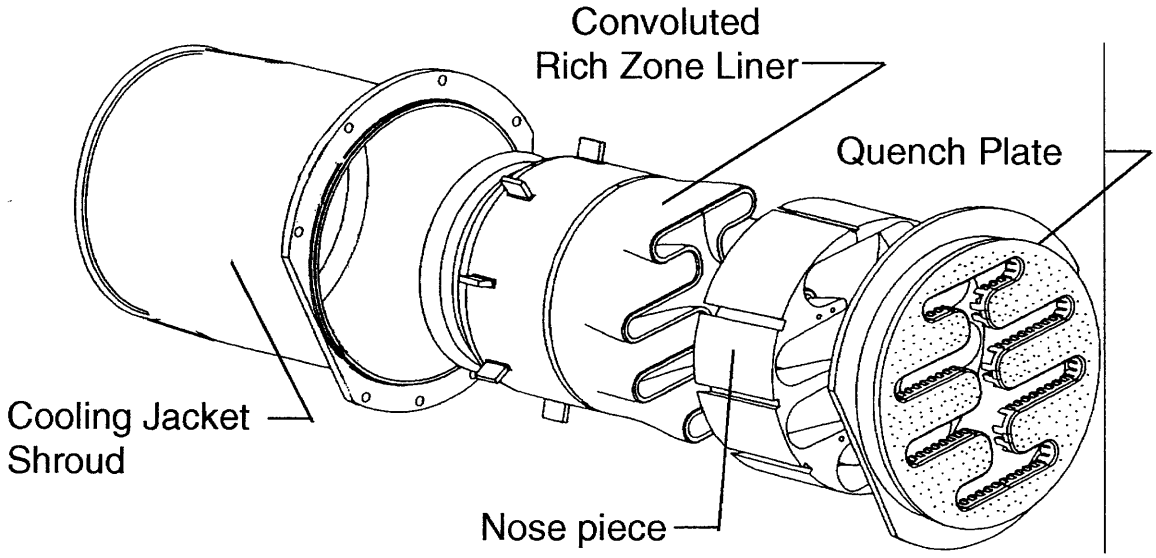

Figure IV - 3 Exploded View of Rich-Quench Module Assembly (Bulkhead Sub-Assembly Not Shown)

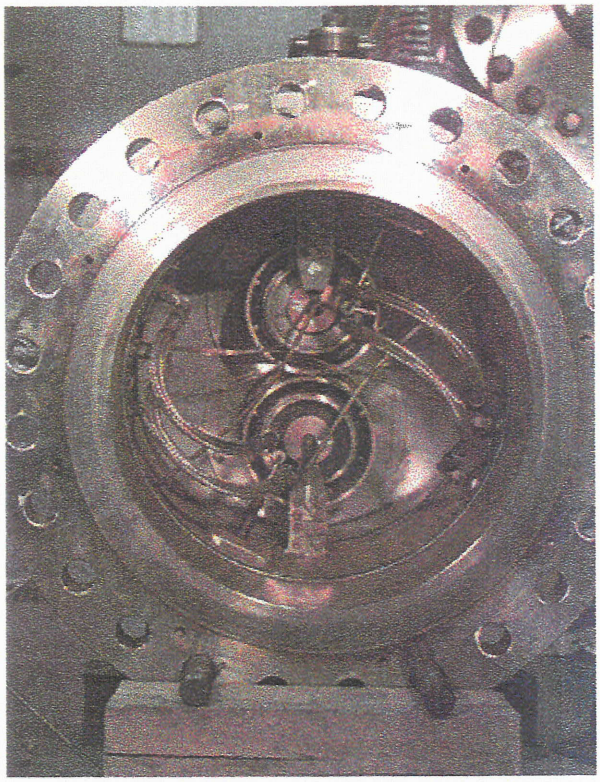

Figure IV - 4 Rich-Quench Modules Installed in Rich Zone Spool Piece Forward-Looking-Aft View

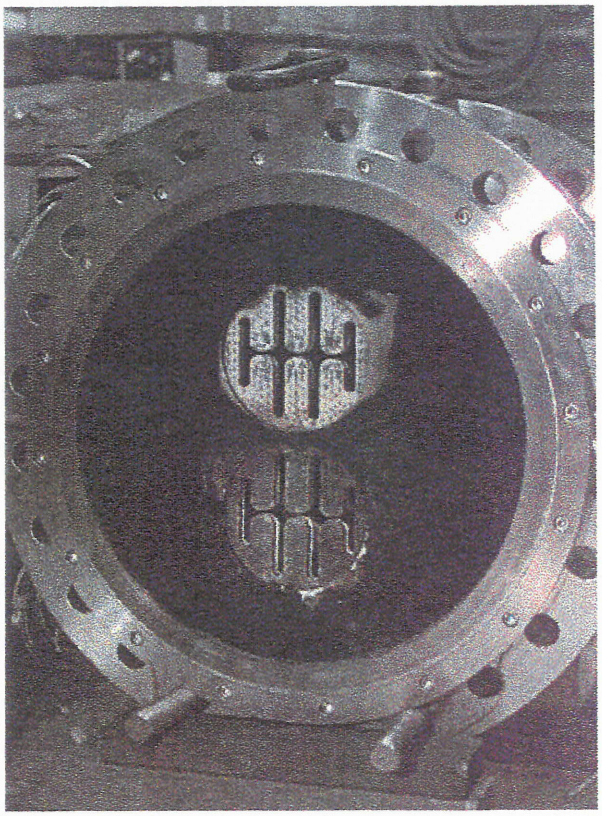

Figure IV - 5 Aft-Looking-Forward View of Rich-Quench Modules and Exit Transition Zone Bulkhead

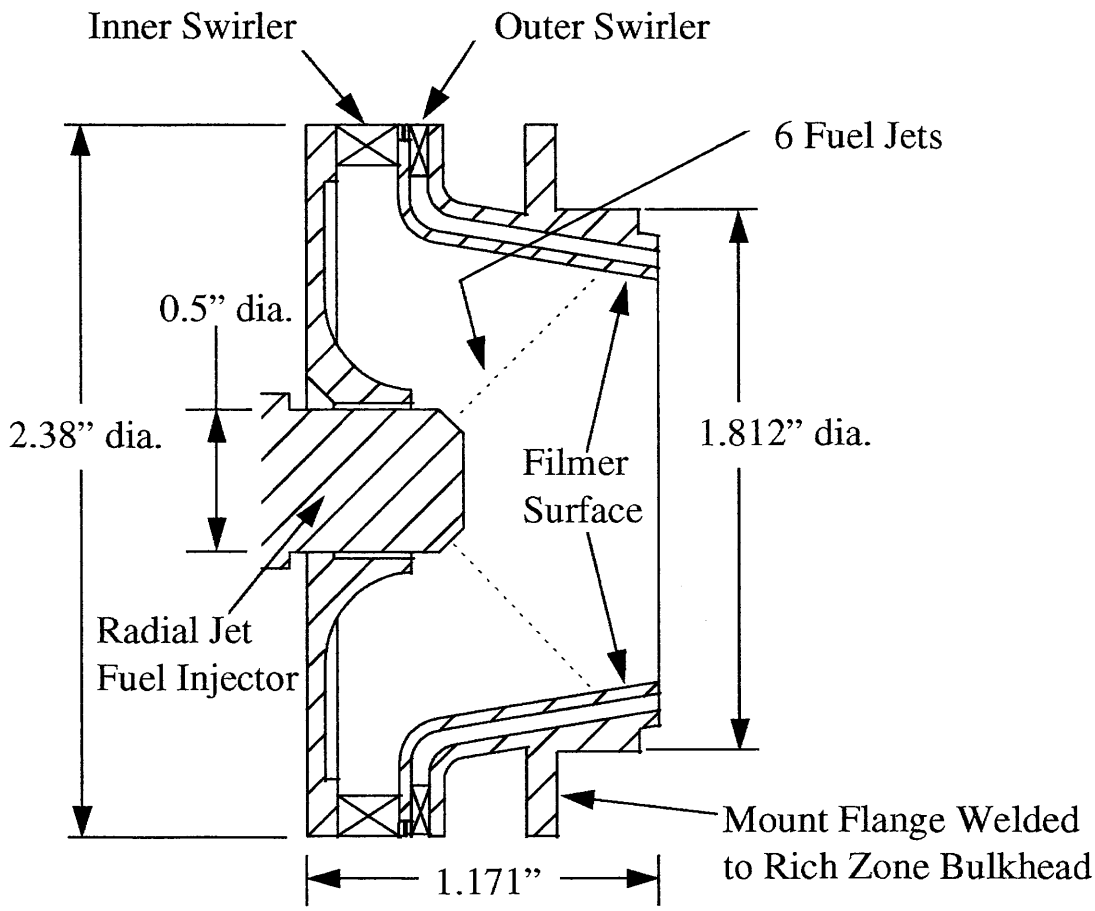

Figure IV - 6 Radial Inflow Swirler/Injector Design

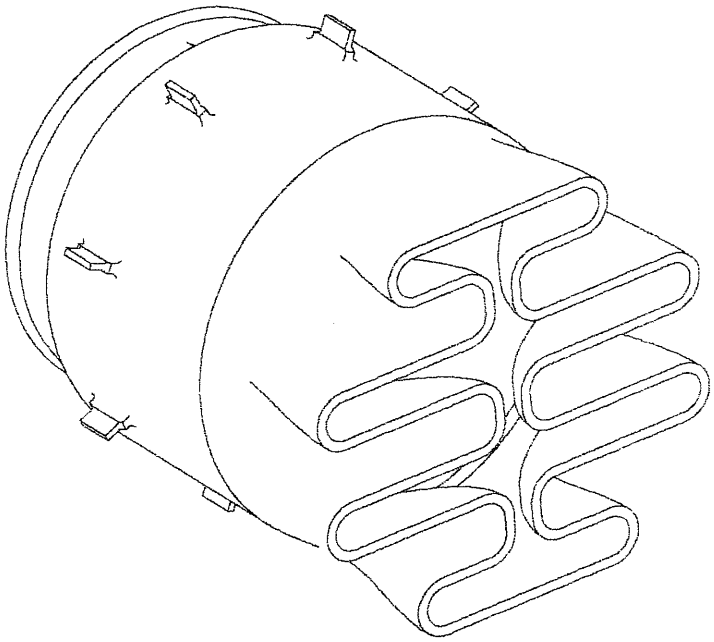

Figure IV - 7 Aft-Looking-Forward Isometric View of Convoluted Rich Zone Liner

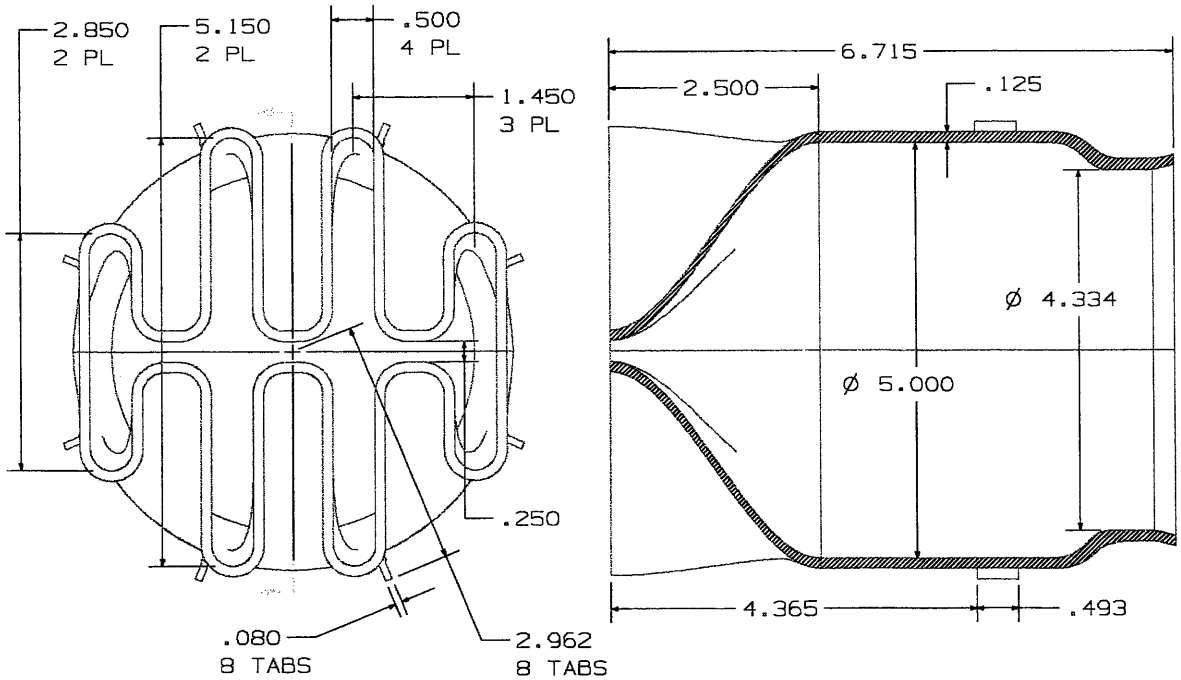

Figure IV - 8 Convoluted Rich Zone Liner Design
Left: Aft-Looking-Forward View; Right: Cross Section

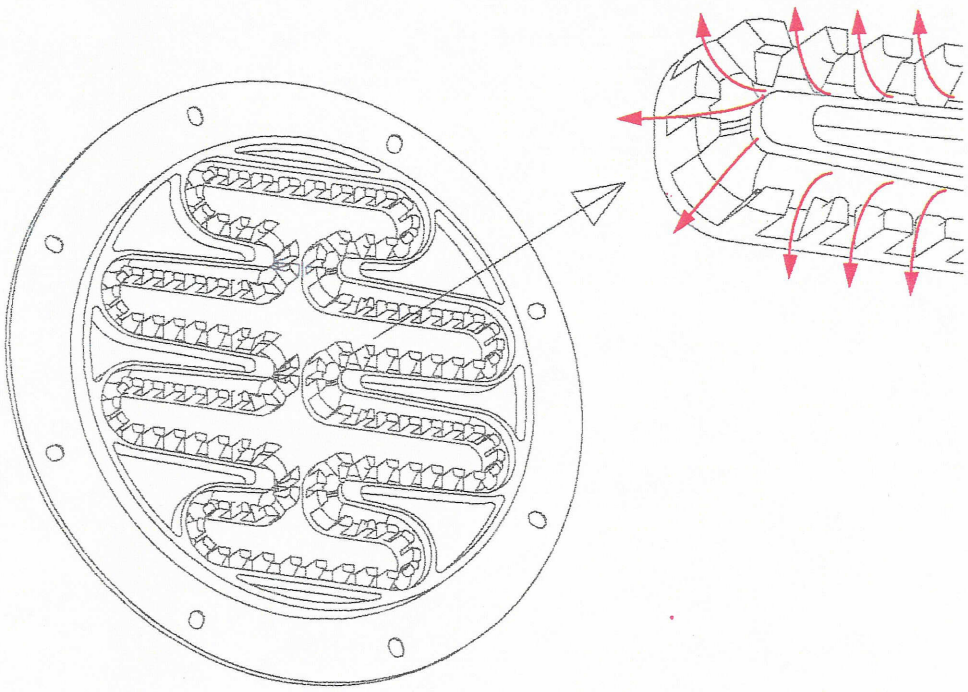

Figure IV - 9 Forward-Looking-Aft Isometric View of Quench Plate Configuration #15 Showing Quench Air Flowpath in Detail View

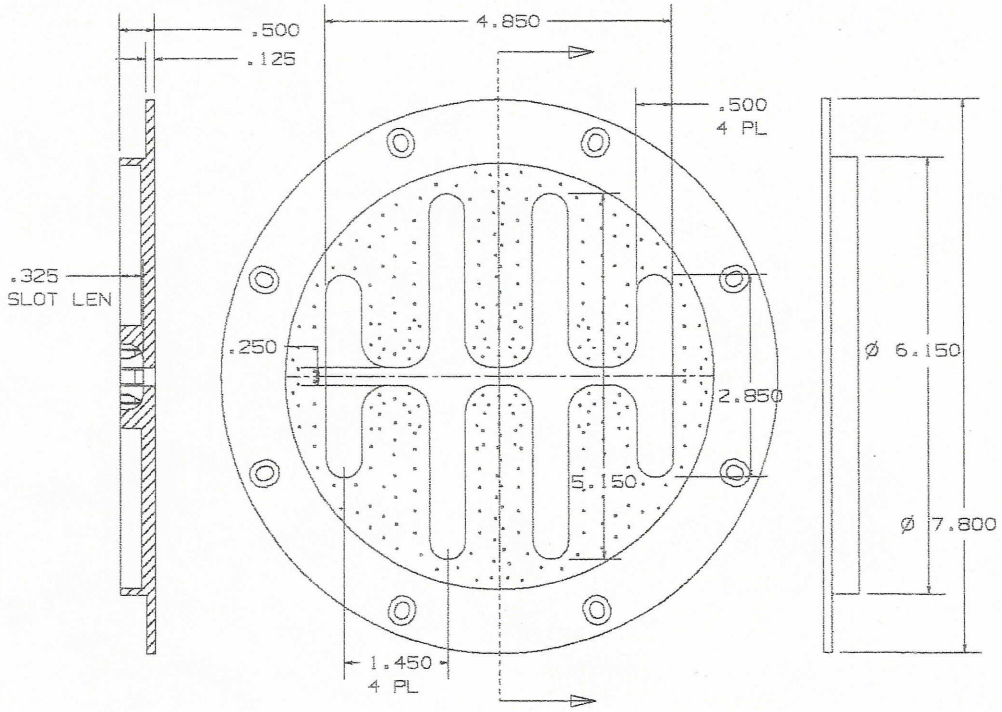

Figure IV - 10 Quench Plate Configuration #15 Design

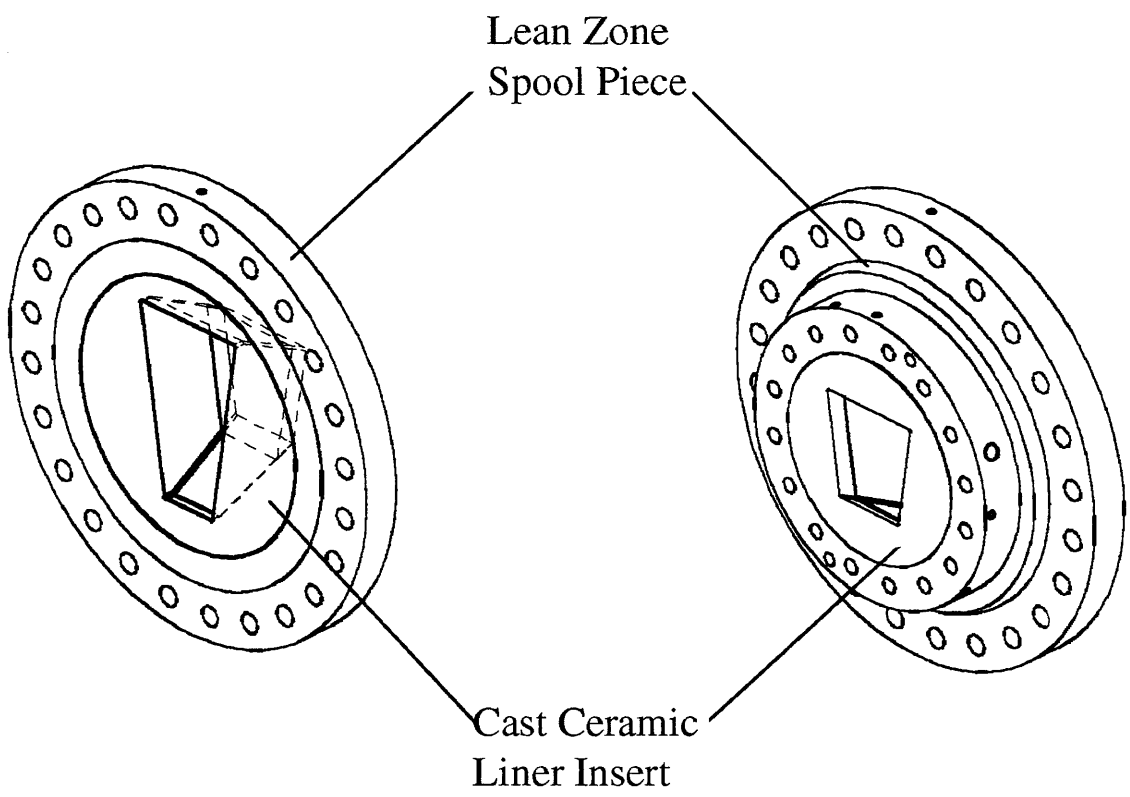

Figure IV - 11 Lean Zone Spool Piece with Cast Ceramic Liner Forming Exit Transition Zone Converging Trapezoidal Shape
Left: Forward-Looking-Aft Isometric View; Right: Aft-Looking-Forward Isometric View

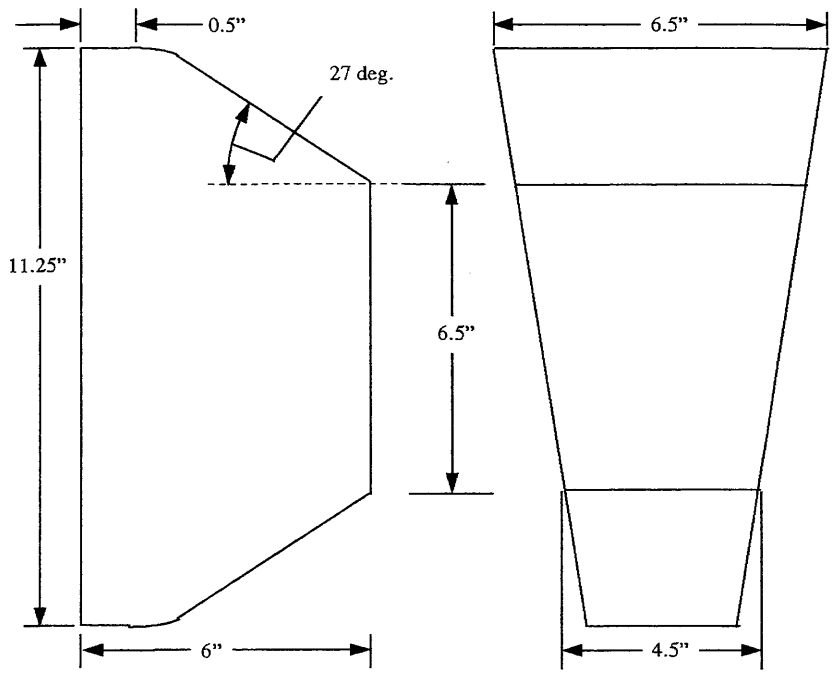

Figure IV - 12 Exit Transition Zone Flowpath Definition

Figure IV - 13 Exit Transition Zone and Piccolo Probe Emissions System Forward-Looking-Aft Isometric View

Section V Figures

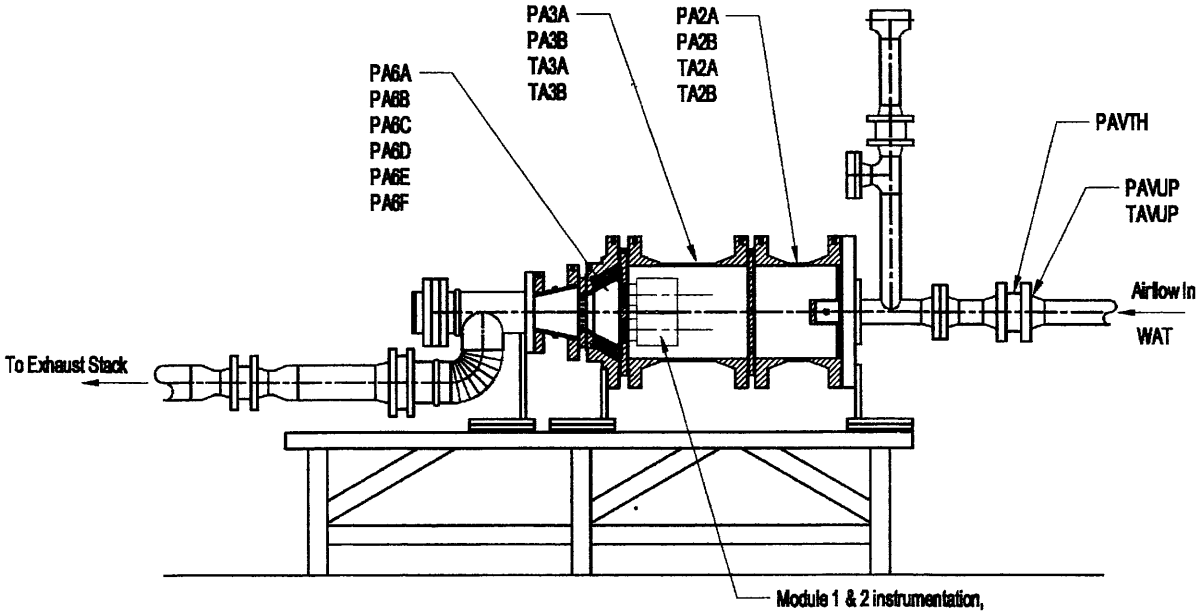

Figure V - 1 Fuel Shifting Sector Rig Static Pressure (P) and Thermocouple (T) Instrumentation

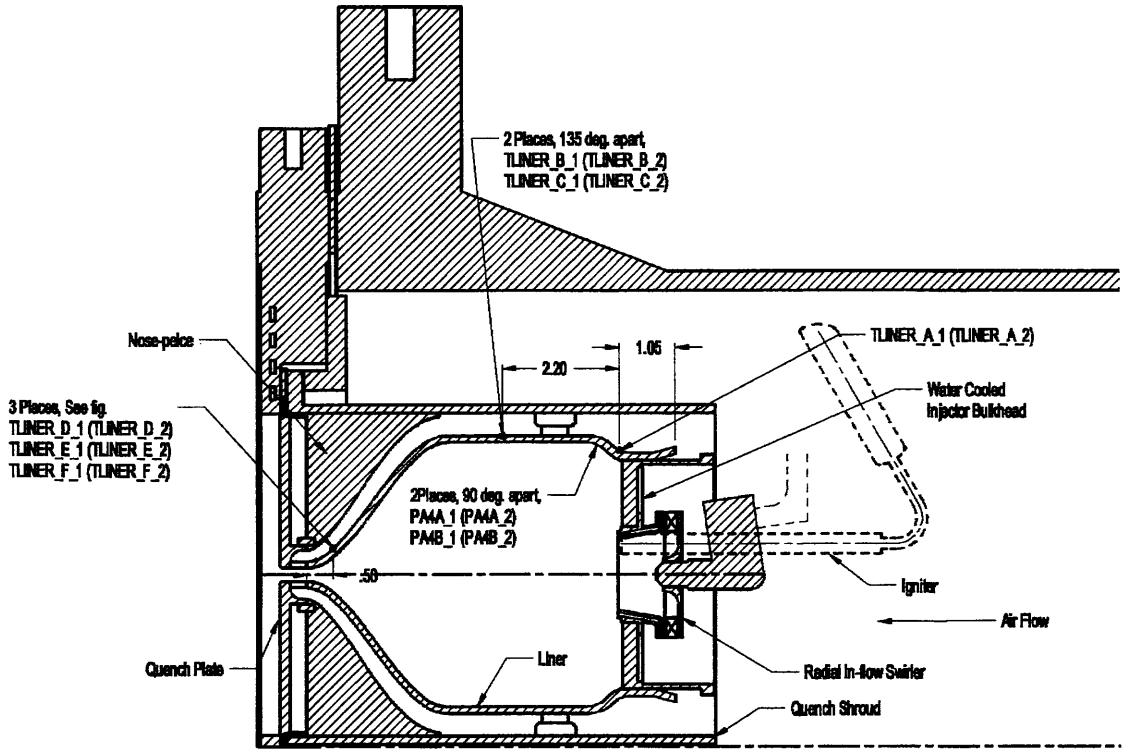

Figure V - 2 Module 1 (& Module 2) Static Pressure (P) and Thermocouple (T) Instrumentation

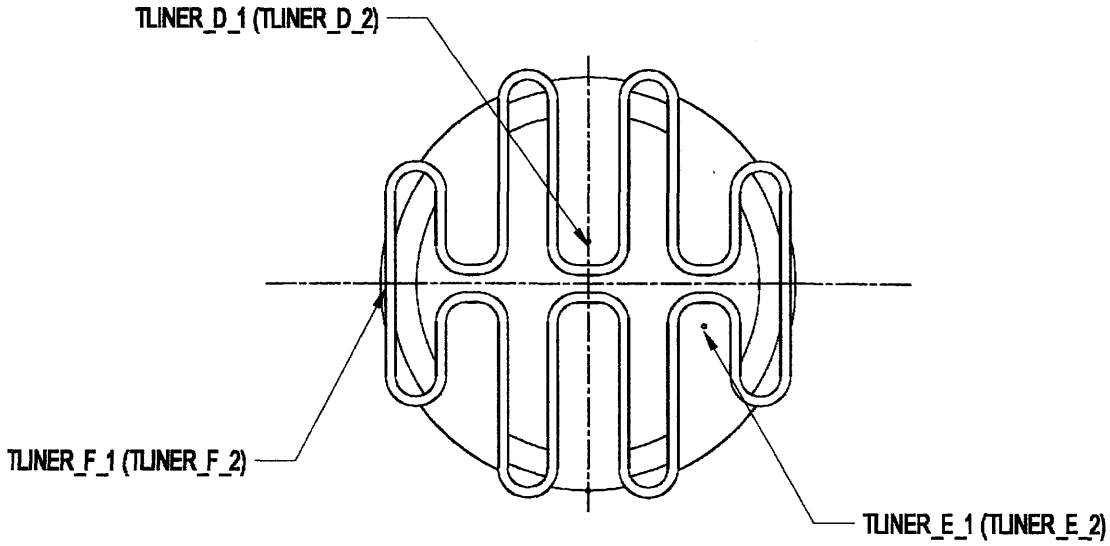

Figure V - 3 Module 1 (& Module 2) Thermocouple Locations on Convoluted Rich Zone Liner Aft-Looking-Forward View

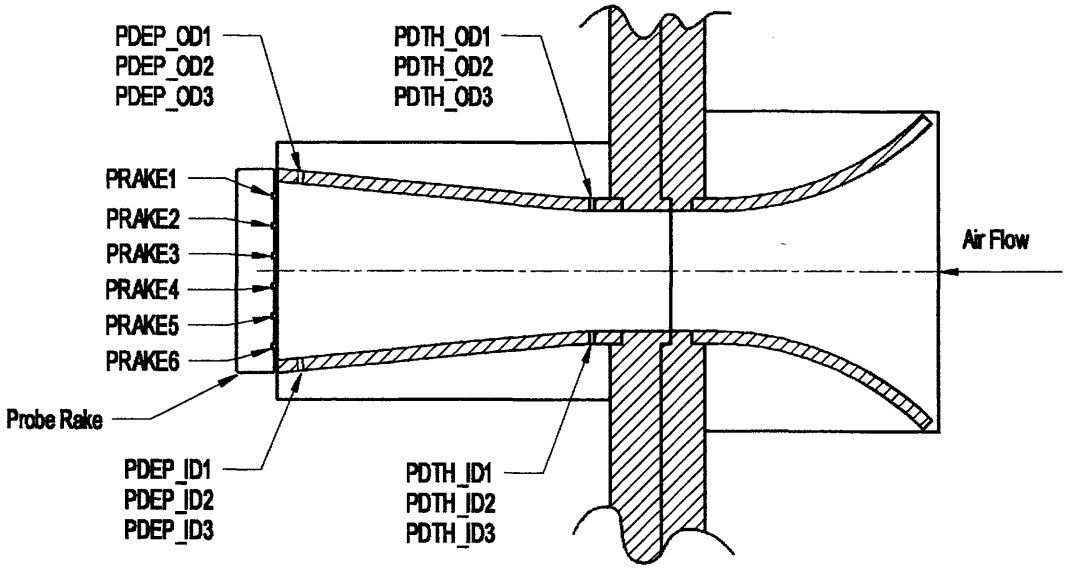

Figure V - 4 Pre-Diffuser Pressure Instrumentation

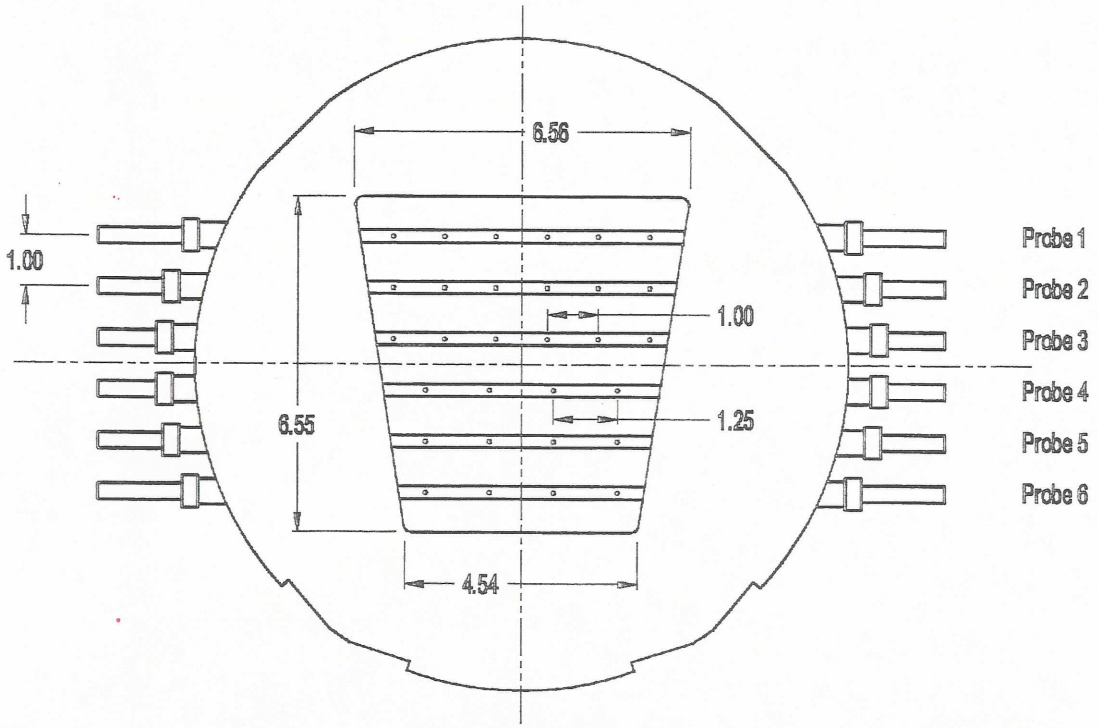

Figure V - 5 Piccolo Probe Emissions System for Profile Assessment and 60% OD / 40% ID Ganged Sampling

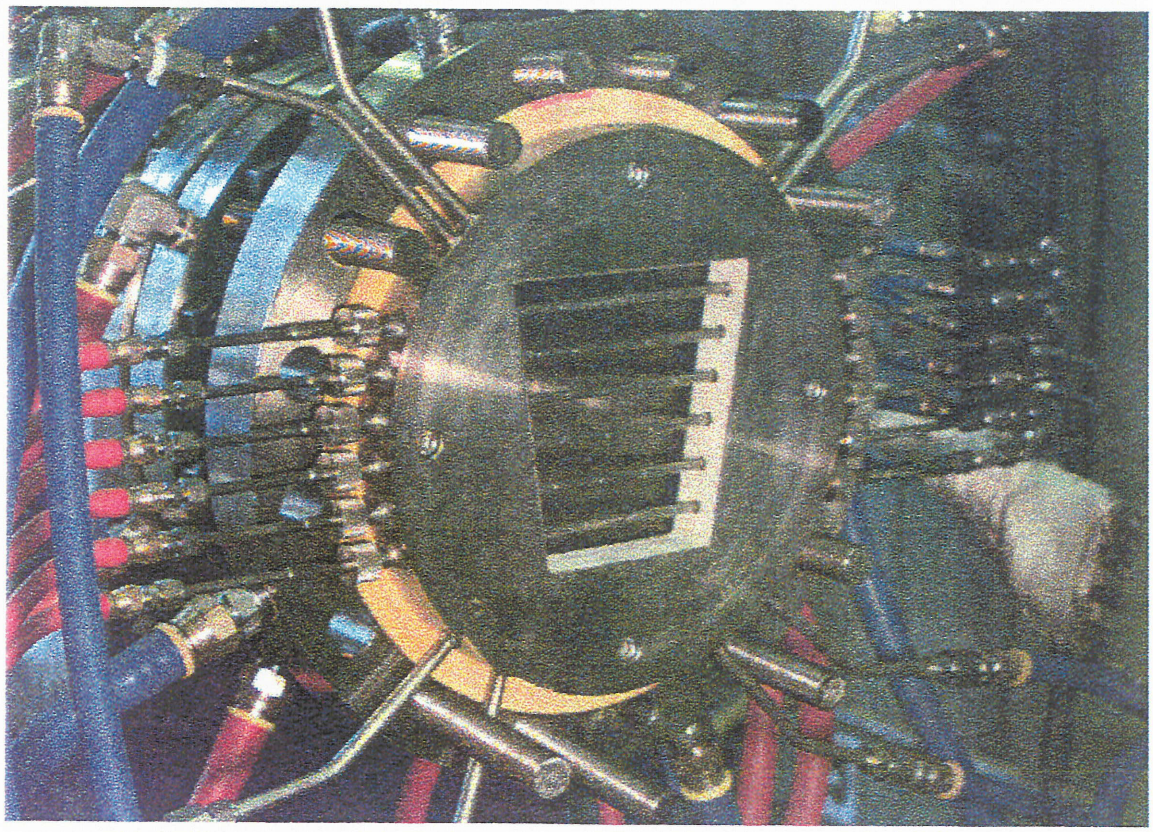

Figure V - 6 Piccolo Probes Installed in Probe Holder

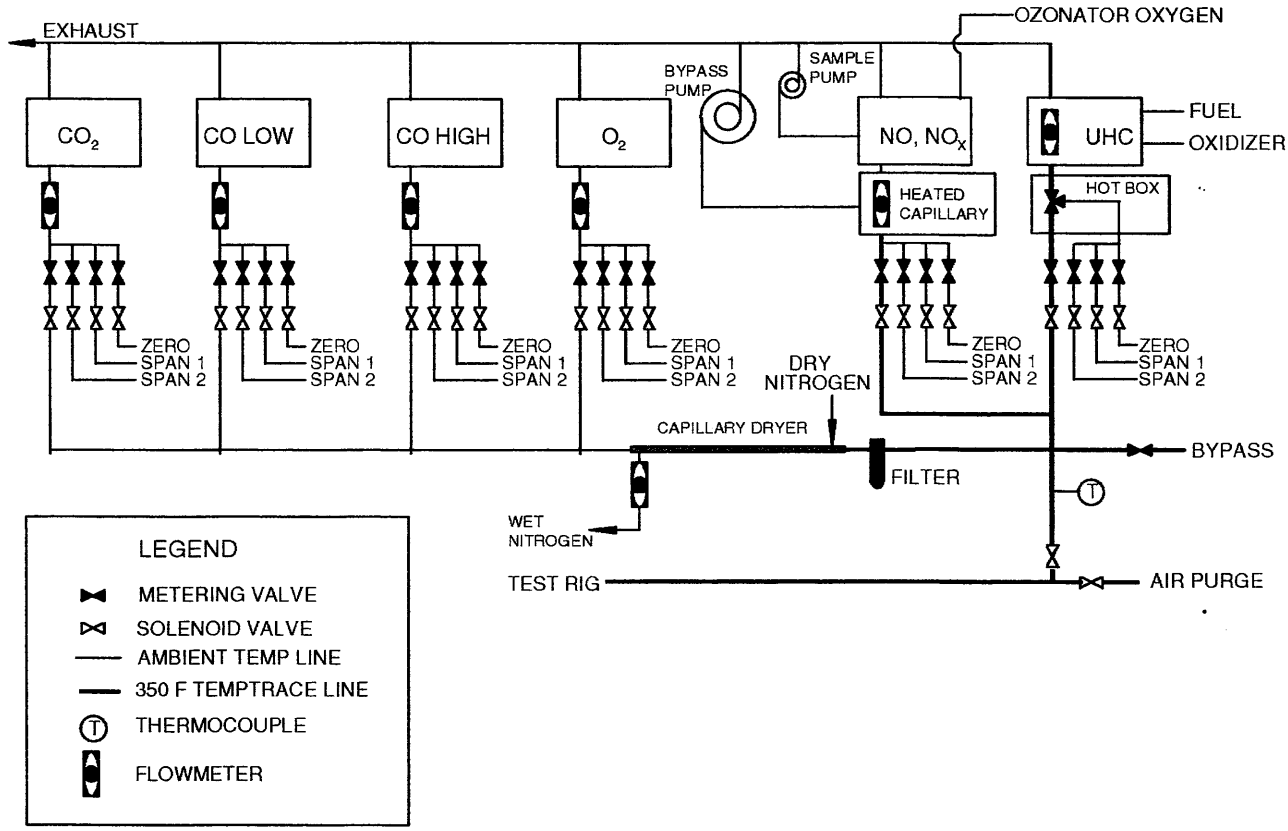

Figure V - 7 Emissions Analysis System Schematic

Section VI Figures

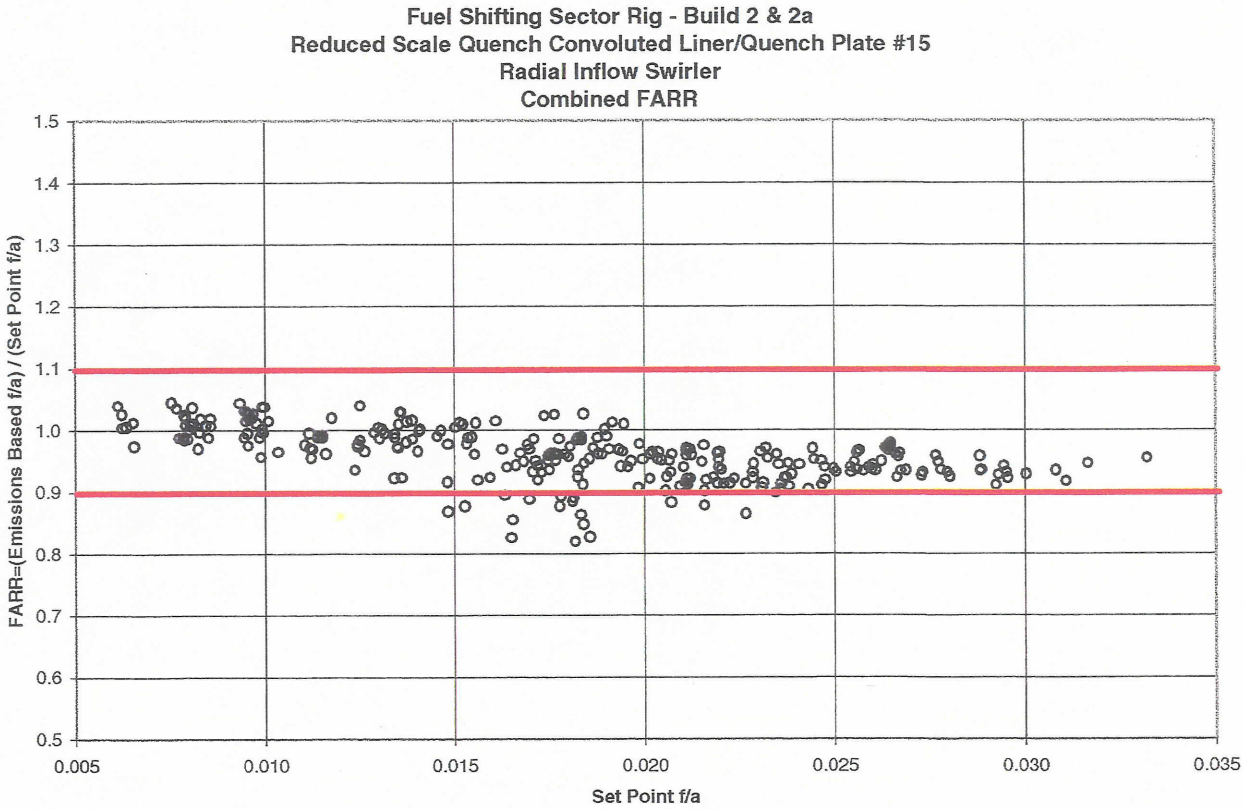

Figure VI - 1 Emissions Data Quality at Nominal Subsonic Cruise , 65%, 34%, 15%, 5.8% Thrust LTO Conditions for Builds 2 & 2a

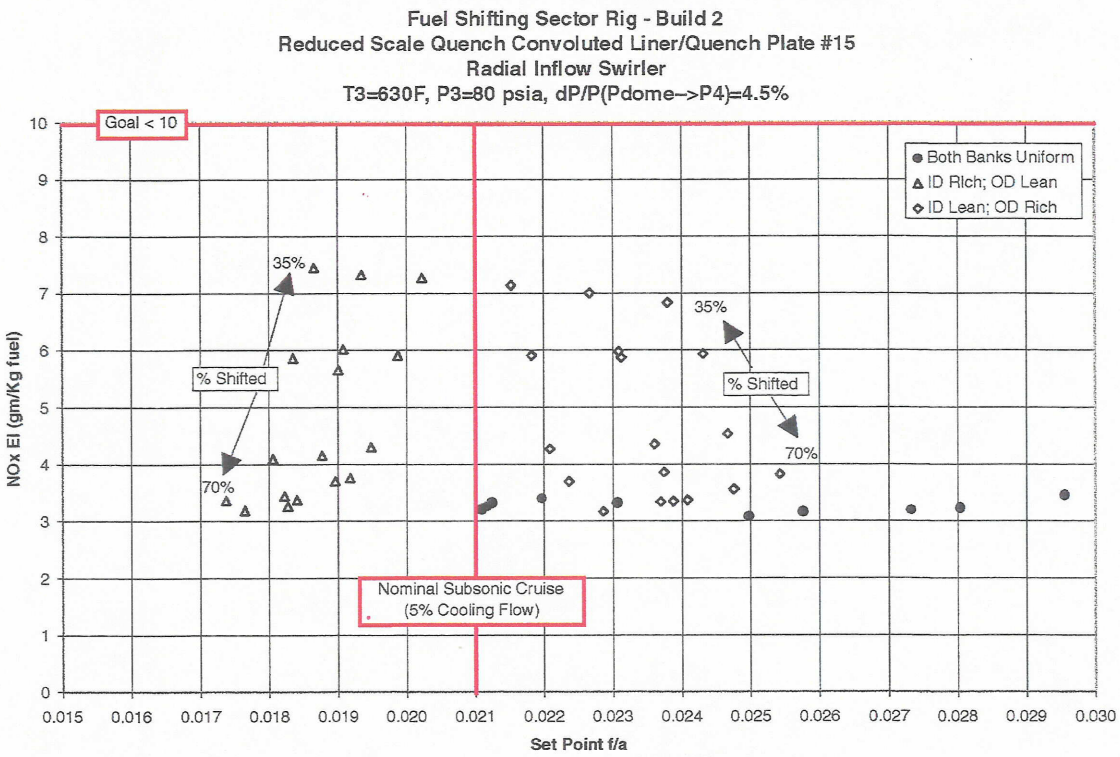

Figure VI - 2 NOx Emissions at Nominal Subsonic Cruise Condition for Fuel Shifting Rig Build 2

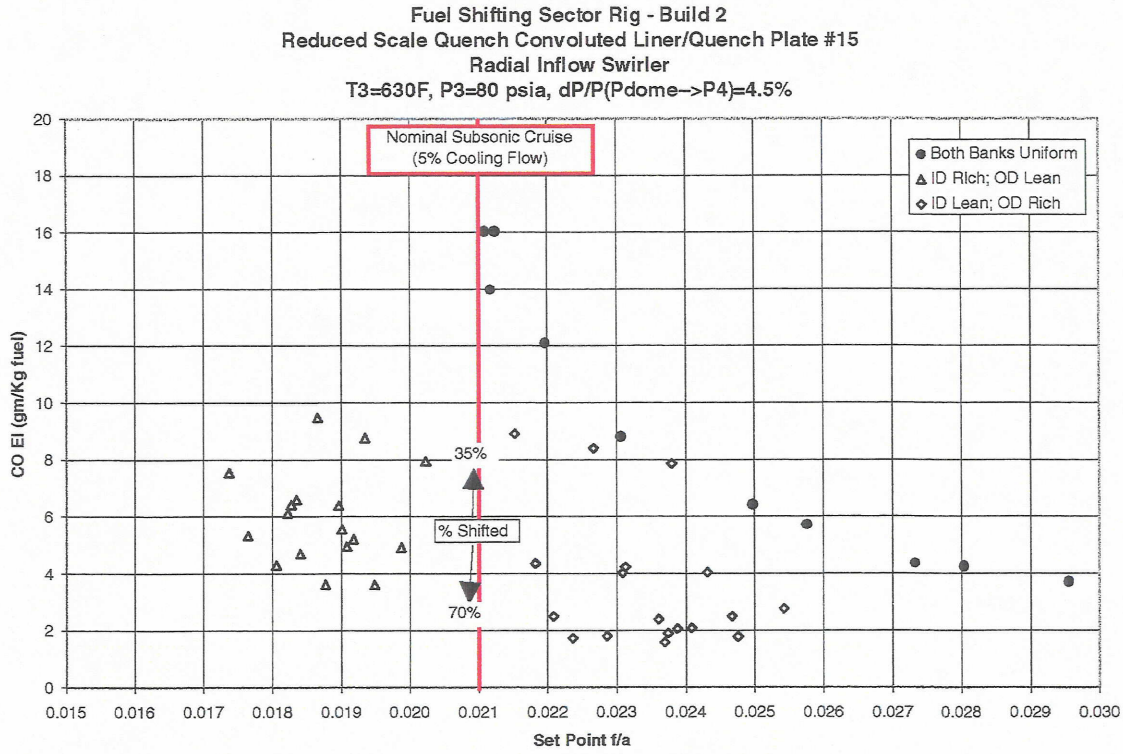

Figure VI - 3 CO Emissions at Nominal Subsonic Cruise Condition for Fuel Shifting Rig Build 2

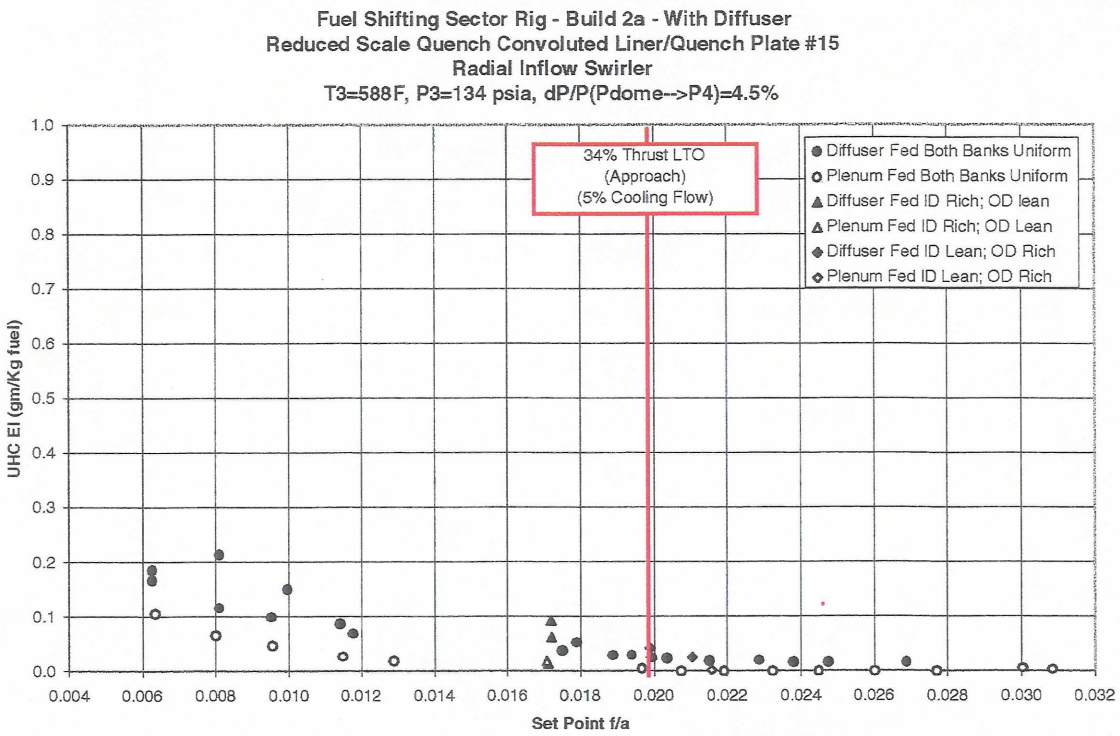

Figure VI - 4 UHC Emissions at Nominal Subsonic Cruise Condition for Fuel Shifting Rig Build 2

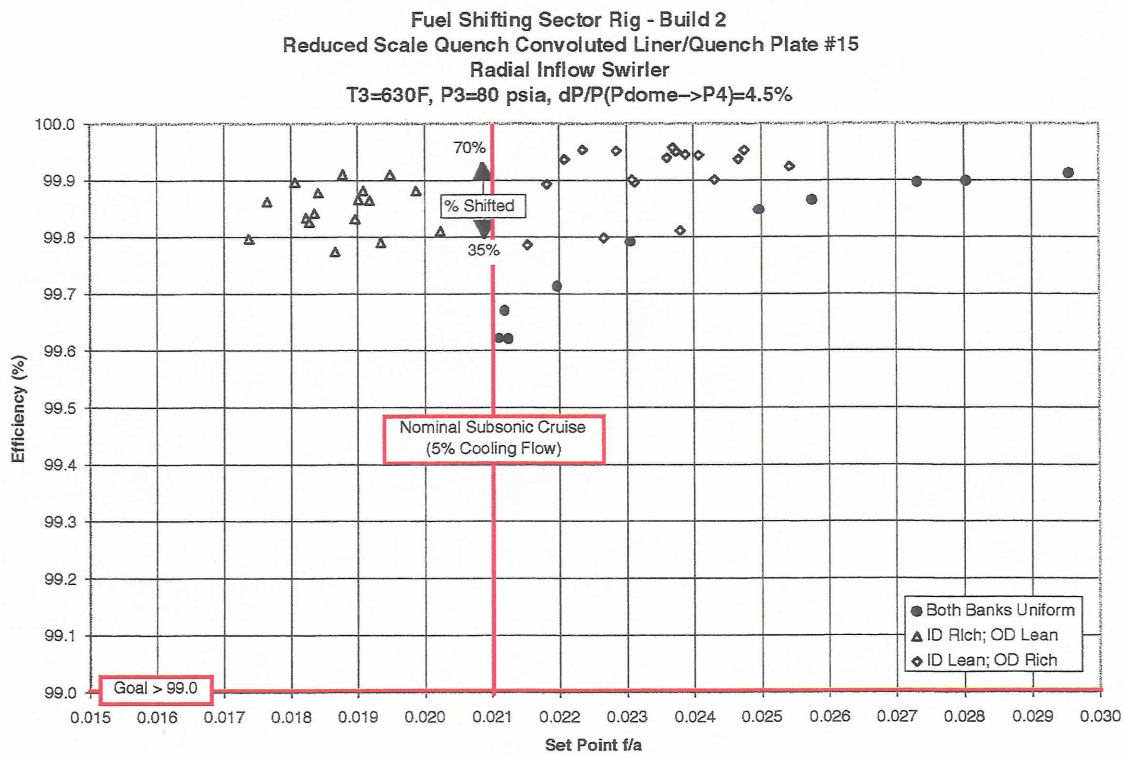

Figure VI - 5 Efficiency at Nominal Subsonic Cruise Condition for Fuel Shifting Rig Build 2

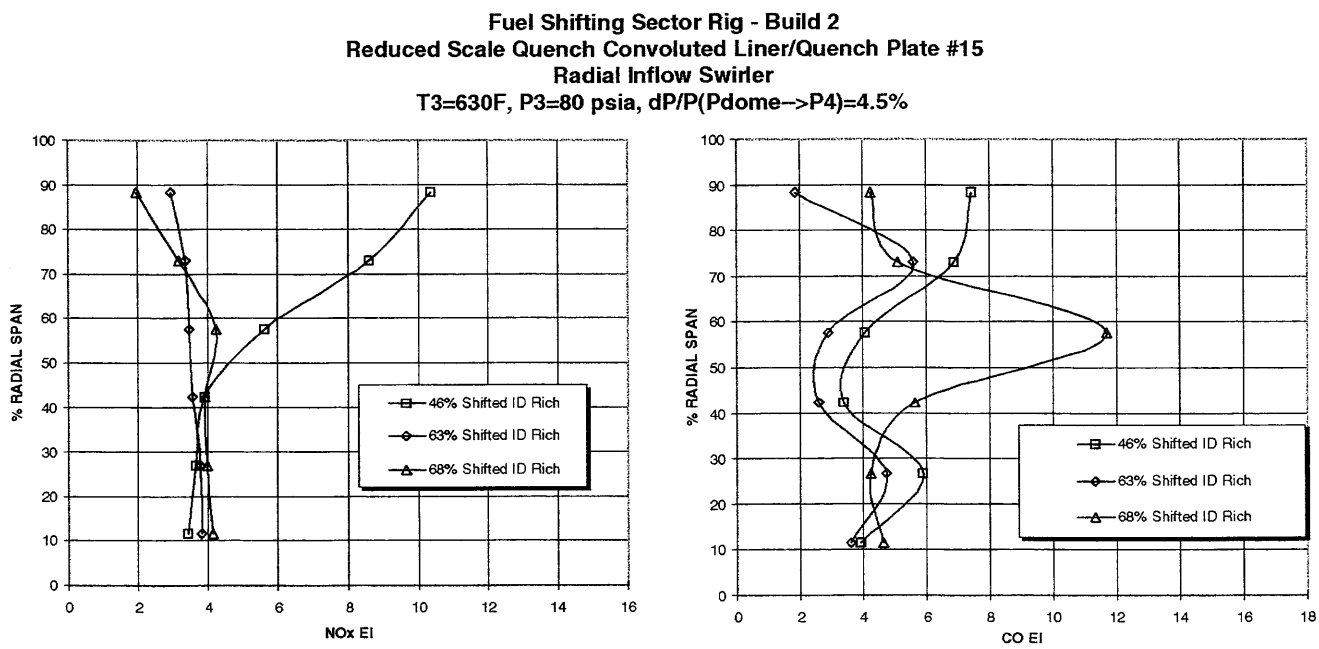

Figure VI - 6 NOx and CO Emissions Profiles for ID Rich Operation at Subsonic Cruise for Fuel Shifting Rig Build 2, f/a=0.019

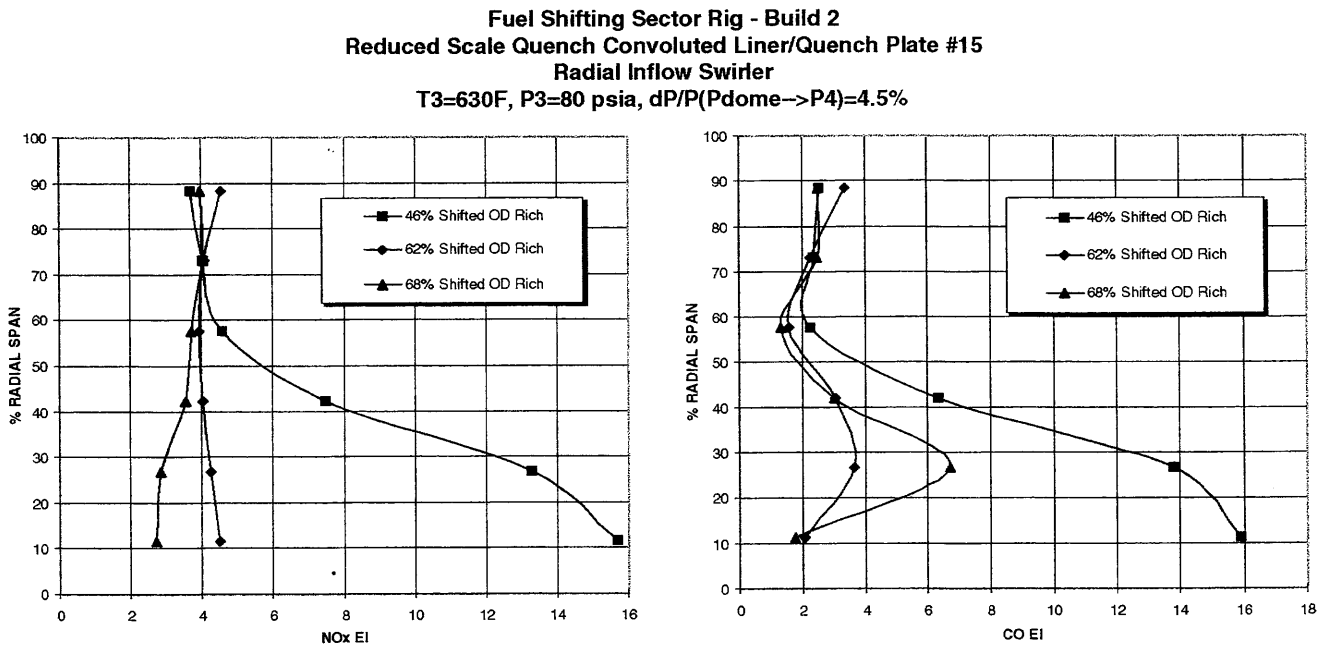

Figure VI - 7 NOx and CO Emissions Profiles for OD Rich Operation at Nominal Subsonic Cruise for Fuel Shifting Rig Build 2, f/a=0.023

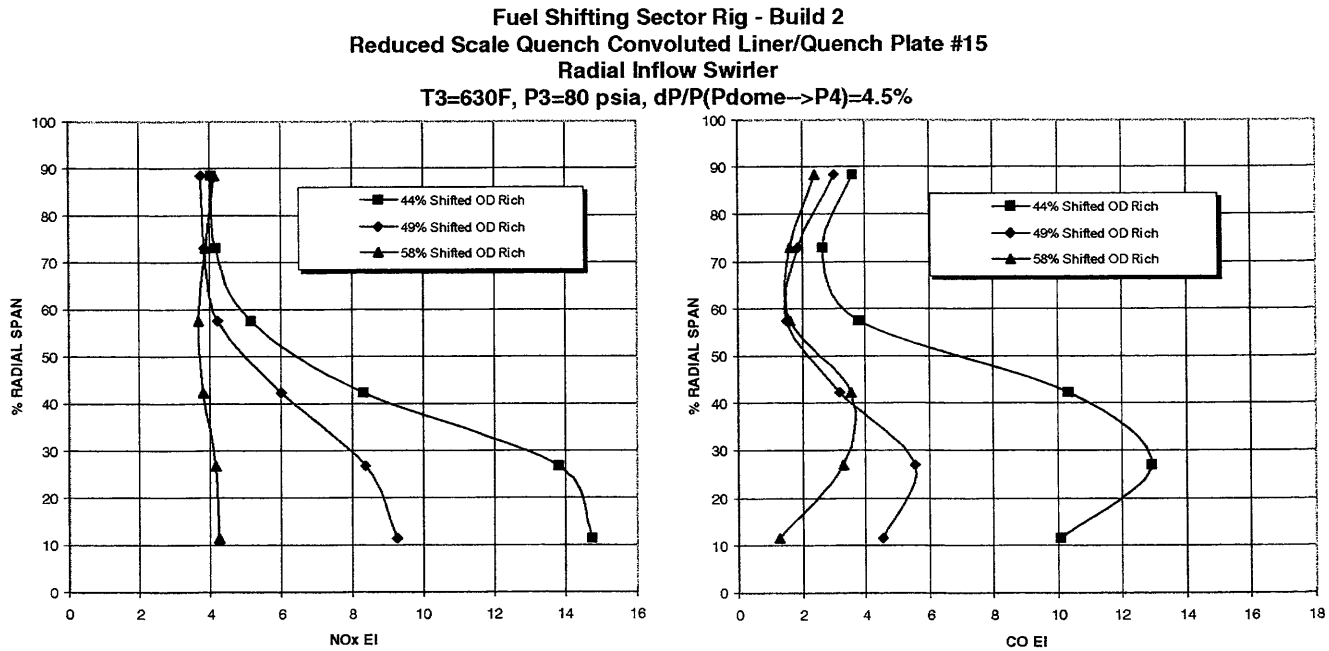

Figure VI - 8 NOx and CO Emissions Profiles for OD Rich Operation at Nominal Subsonic Cruise for Fuel Shifting Rig Build 2, f/a=0.021

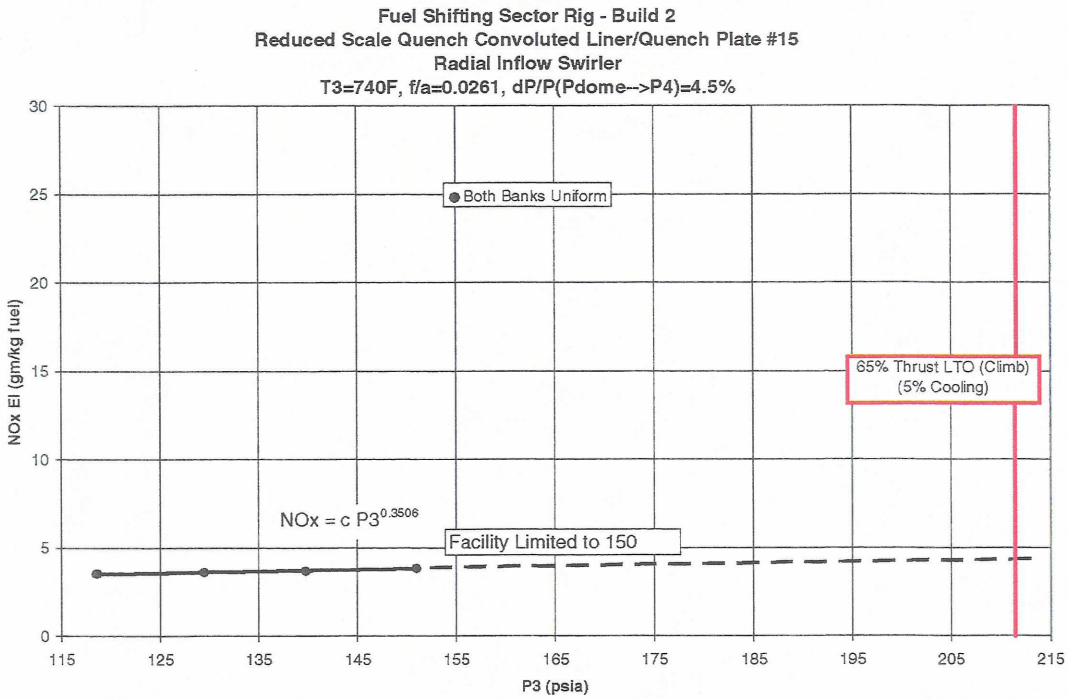

Figure VI - 9 NOx as a Function of Inlet Pressure for Estimation of Emissions at 65% Thrust LTO Condition for Fuel Shifting Rig Build 2

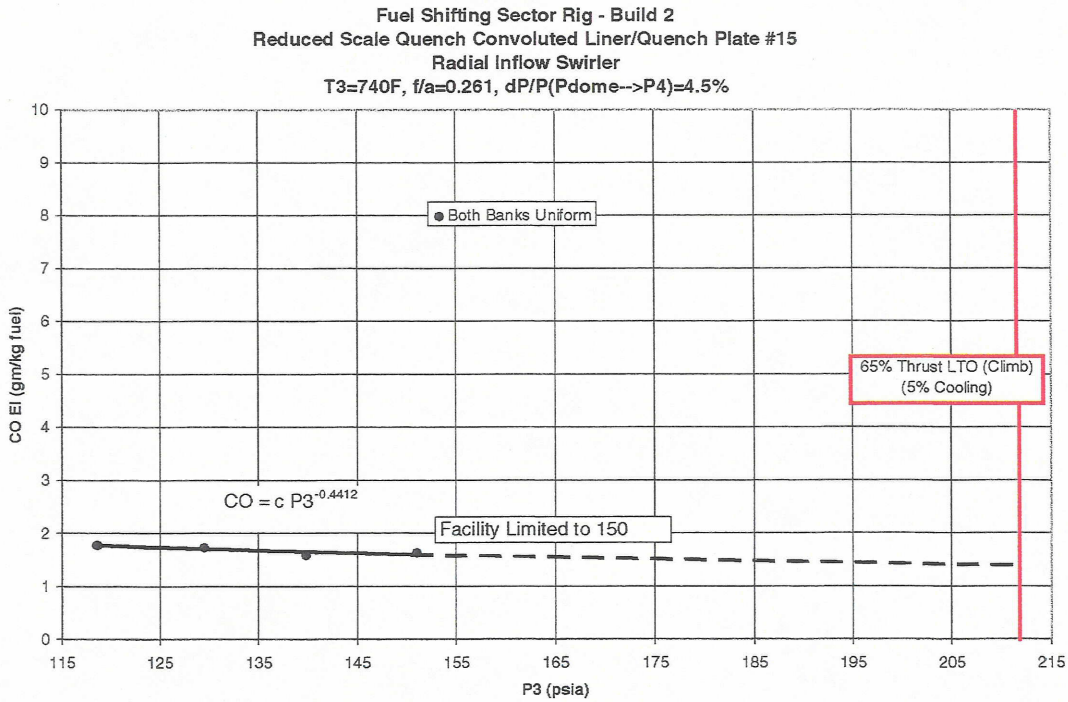

Figure VI - 10 CO as a Function of Inlet Pressure for Estimation of Emissions at 65% Thrust LTO Condition for Fuel Shifting Rig Build 2

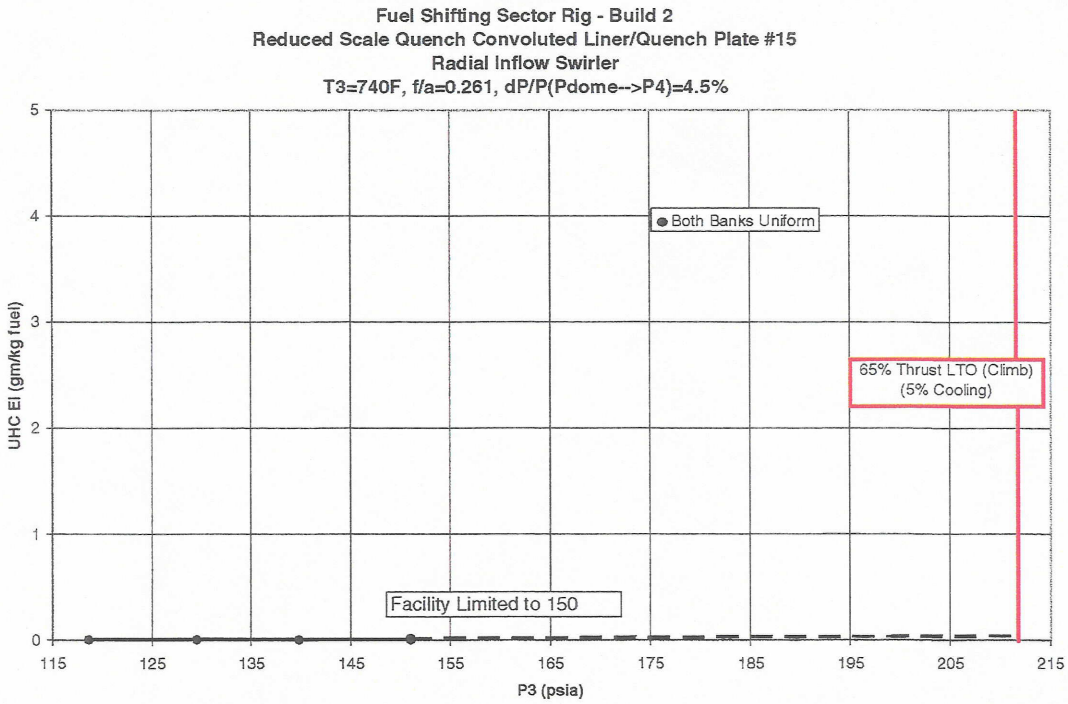

Figure VI - 11 UHC as a Function of Inlet Pressure for Estimation of Emissions at 65% Thrust LTO Condition for Fuel Shifting Rig Build 2

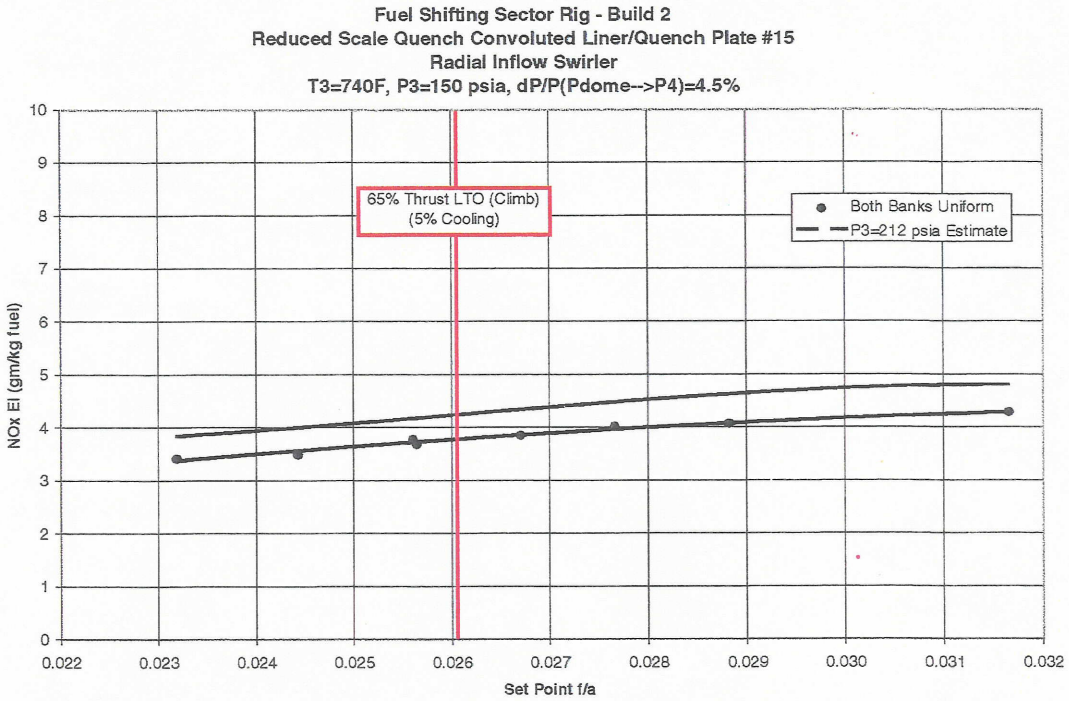

Figure VI - 12 Estimated NOx Emissions at 65% Thrust LTO Condition for Fuel Shifting Rig Build 2

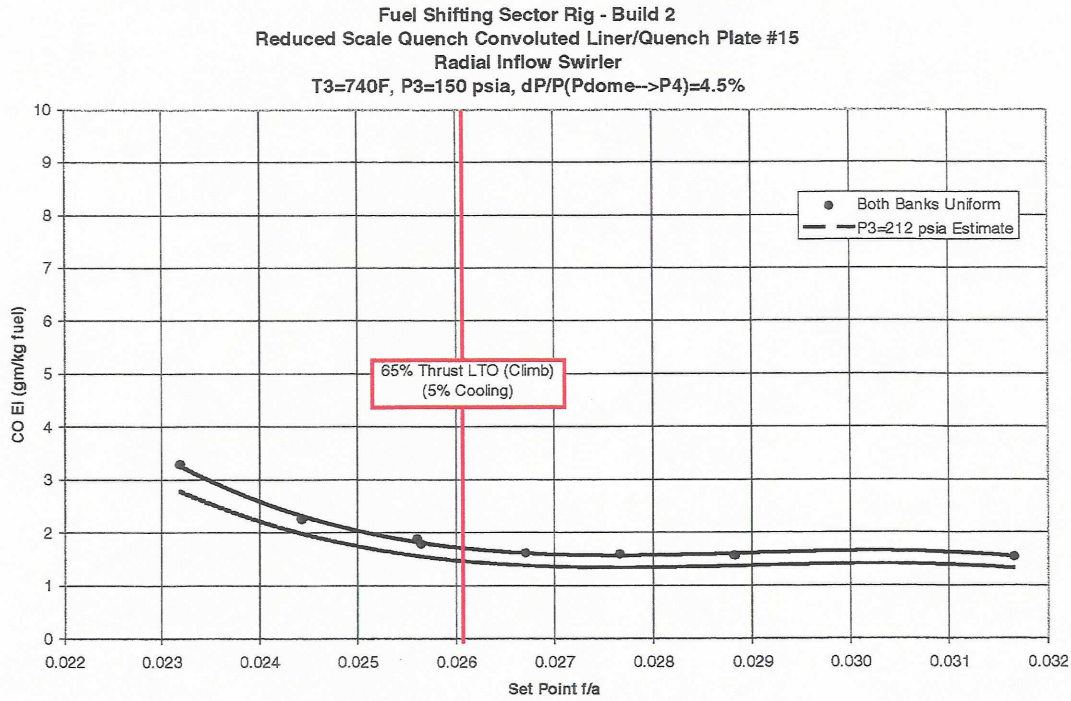

Figure VI - 13 Estimated CO Emissions at 65% Thrust LTO Condition for Fuel Shifting Rig Build 2

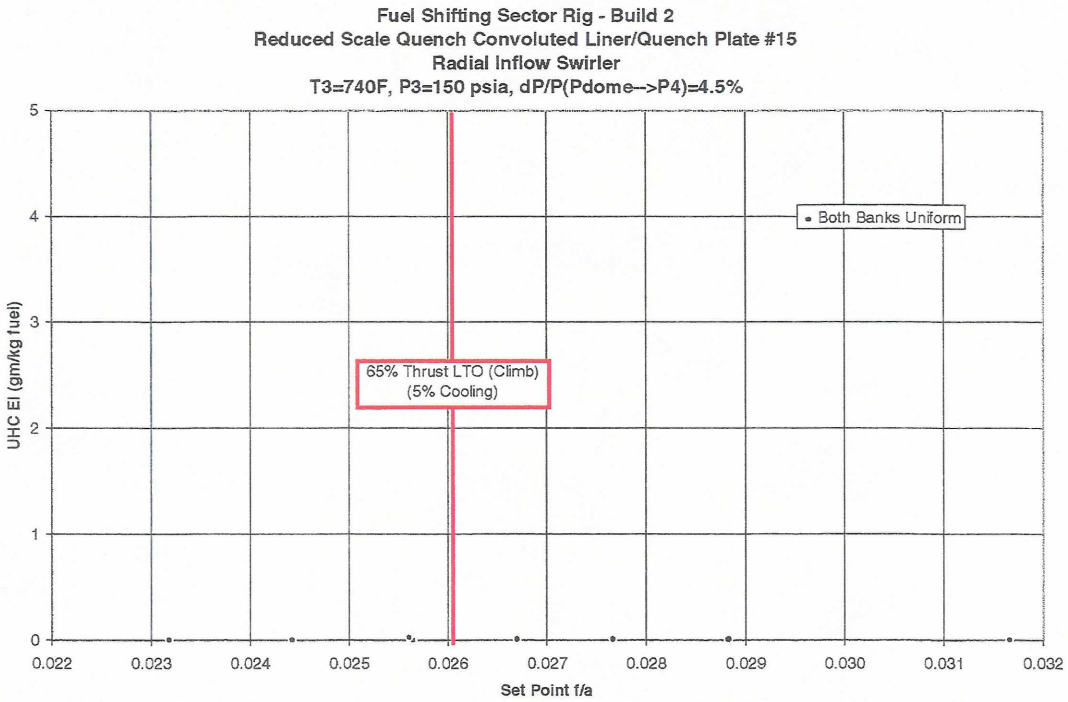

Figure VI - 14 Estimated UHC Emissions at 65% Thrust LTO Condition for Fuel Shifting Rig Build 2

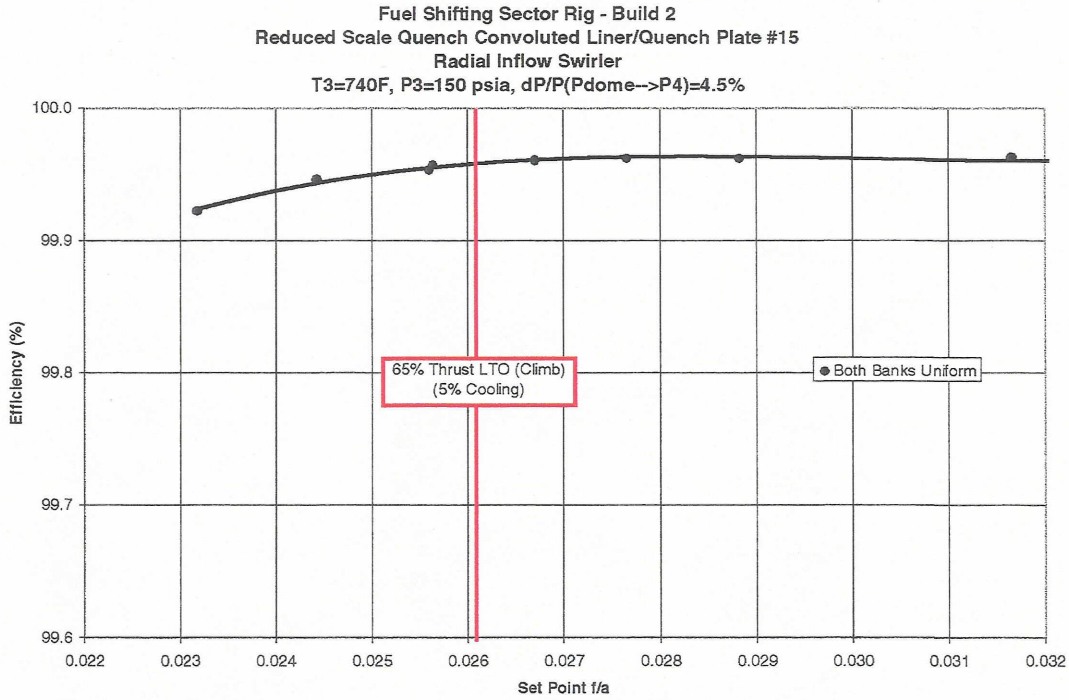

Figure VI - 15 Estimated Efficiency at 65% Thrust LTO Condition for Fuel Shifting Rig Build 2

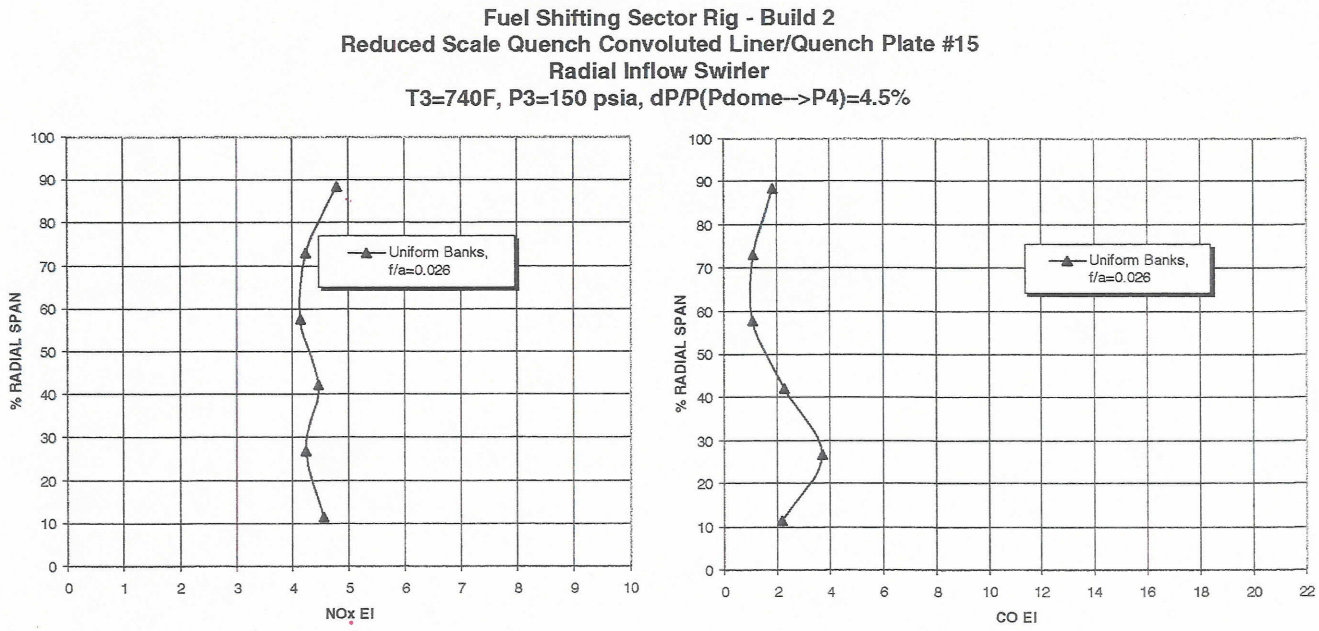

Figure VI - 16 NOx and CO Emissions Profiles for Uniform Operation at 65% Thrust LTO Condition for Fuel Shifting Rig Build 2, f/a=0.026

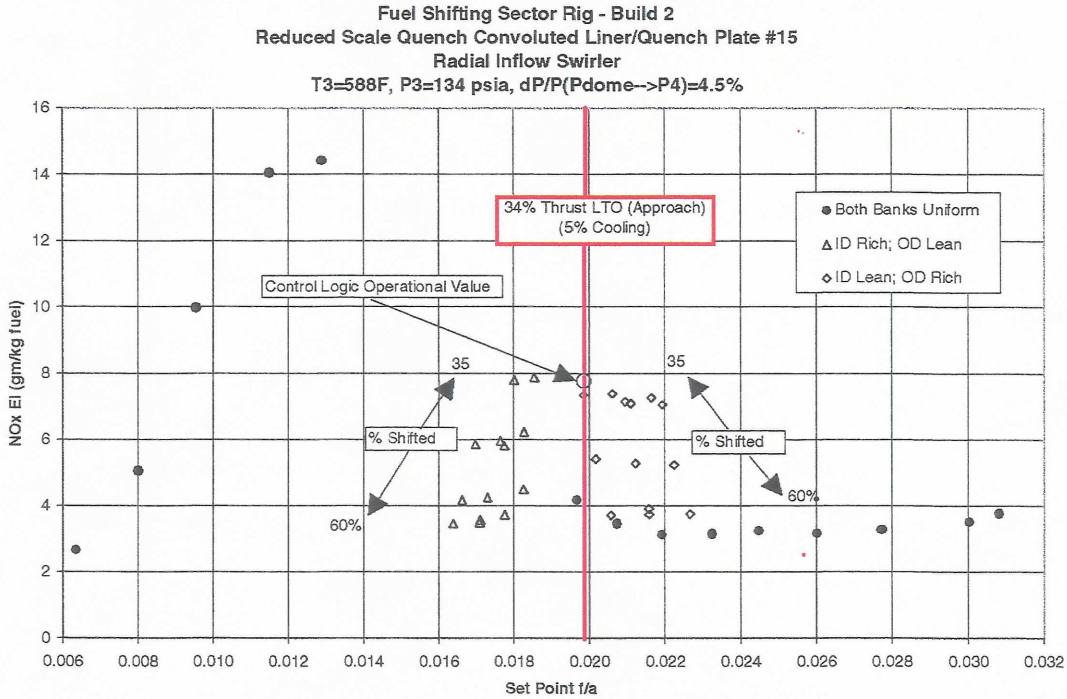

Figure VI - 17 NOx Emissions at 34% Thrust LTO Condition for Fuel Shifting Rig Build 2

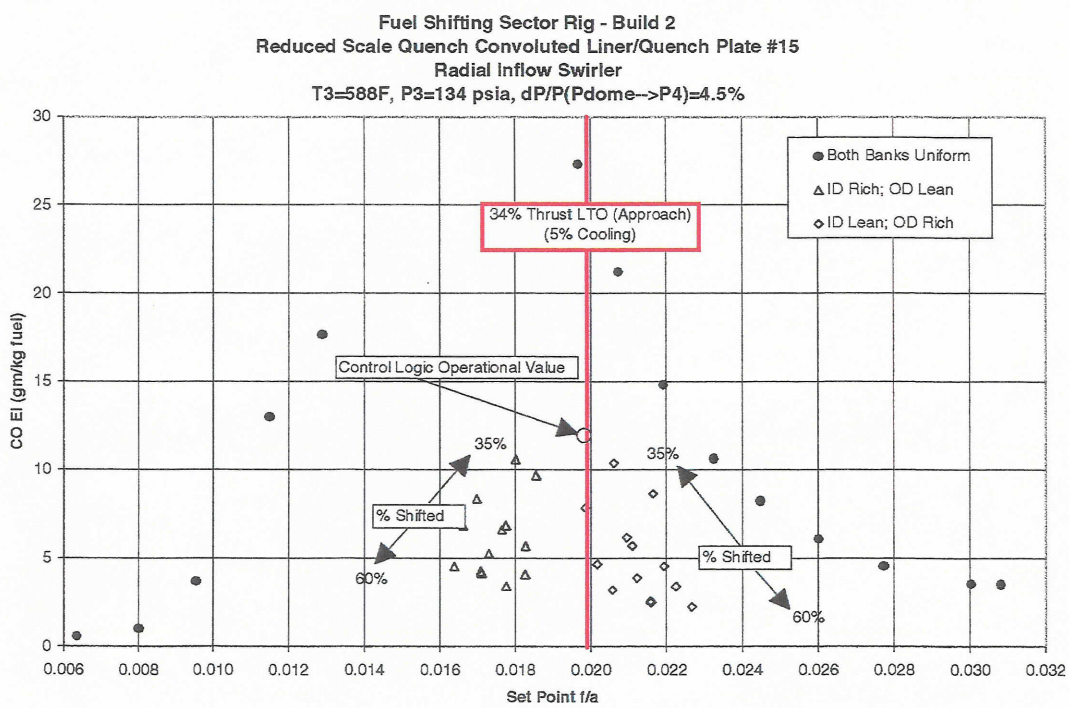

Figure VI - 18 CO Emissions at 34% Thrust LTO Condition for Fuel Shifting Rig Build 2

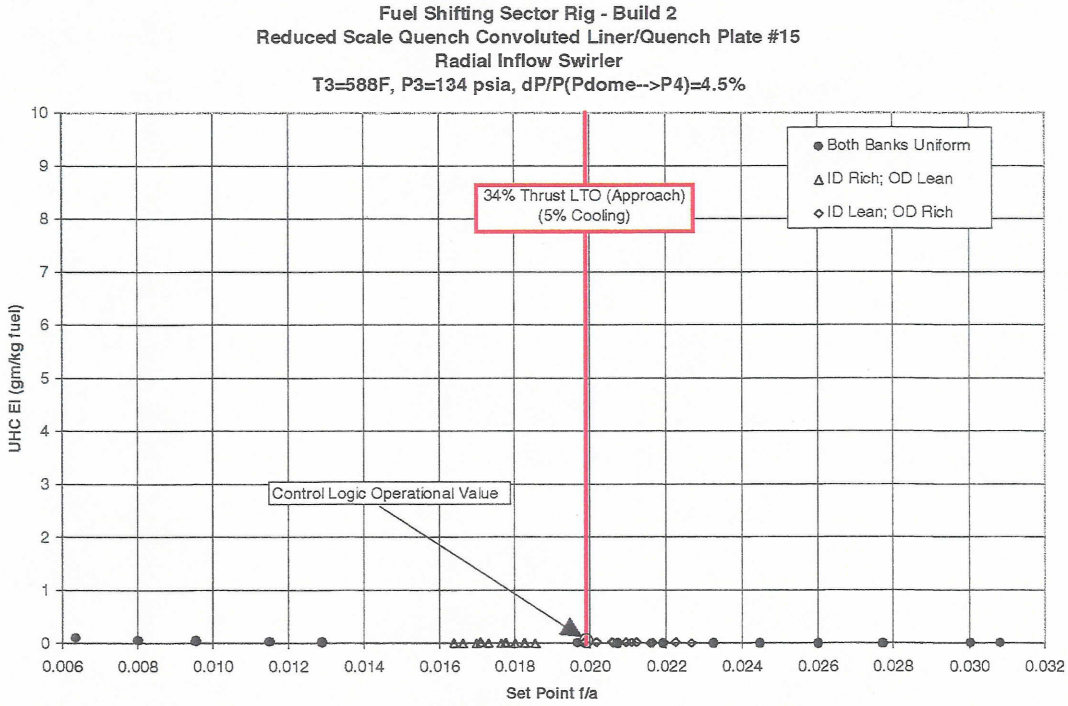

Figure VI - 19 UHC Emissions at 34% Thrust LTO Condition for Fuel Shifting Rig Build 2

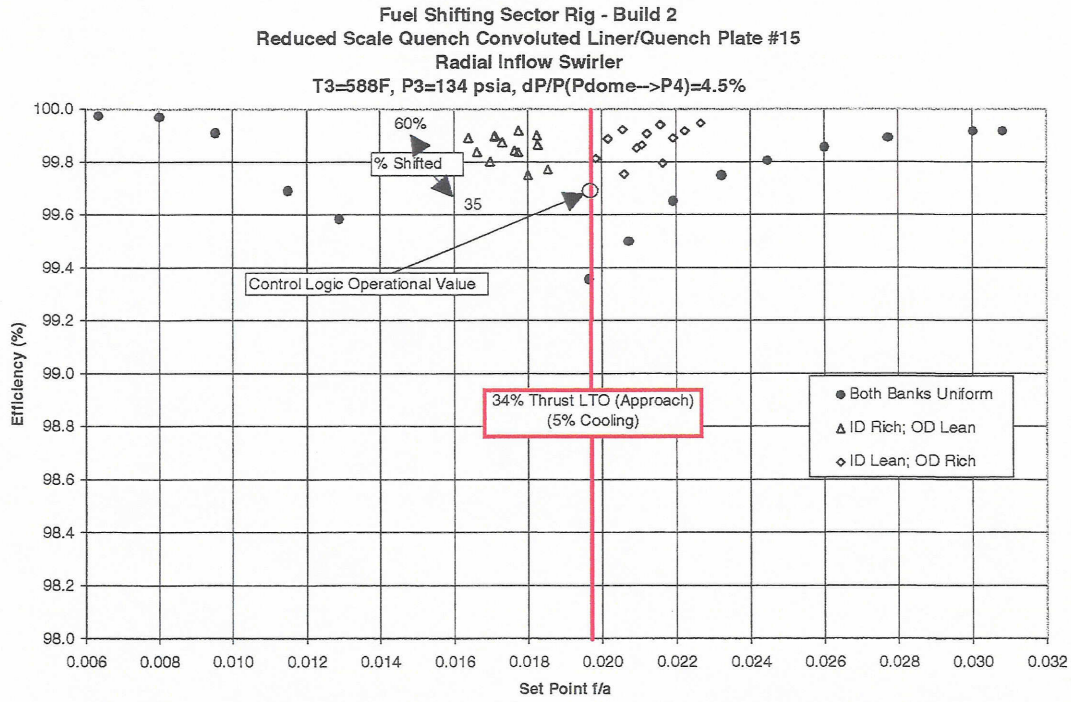

Figure VI - 20 Efficiency at 34% Thrust LTO Condition for Fuel Shifting Rig Build 2

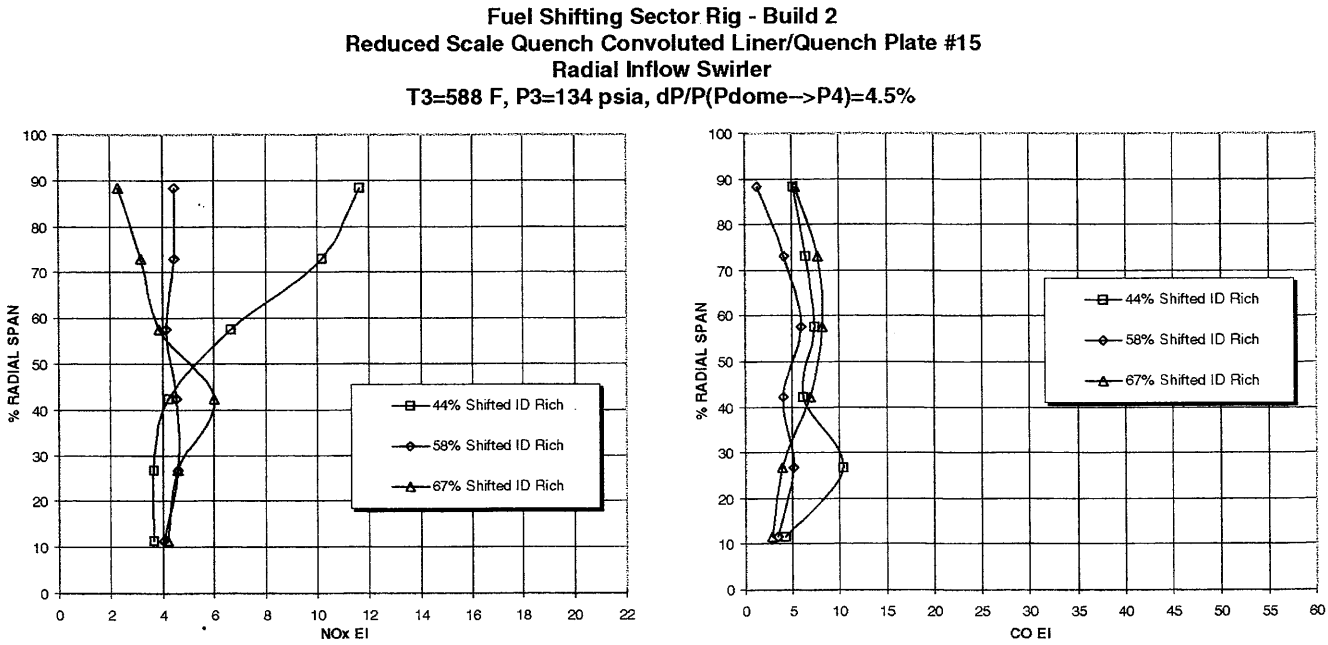

Figure VI - 21 NOx and CO Emissions Profiles for ID Rich Operation at 34% Thrust LTO Condition for Fuel Shifting Rig Build 2, f/a=0.017

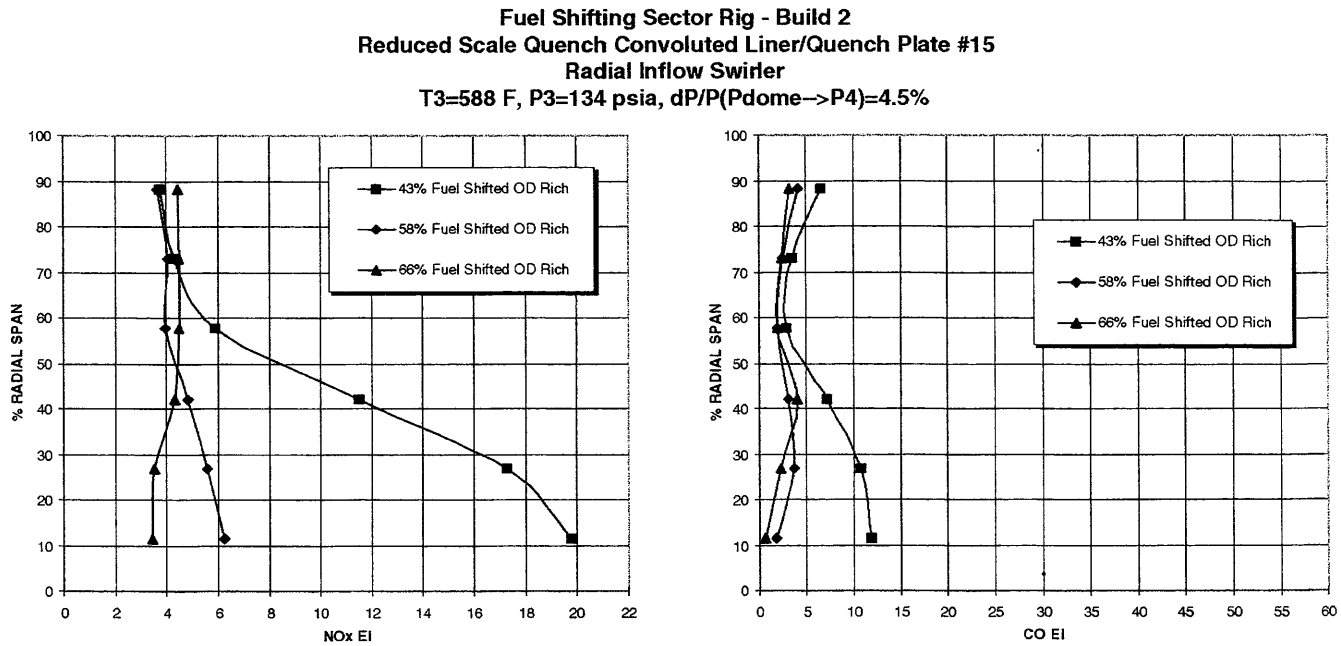

Figure VI - 22 NOx and CO Emissions Profiles for OD Rich Operation at 34% Thrust LTO Condition for Fuel Shifting Rig Build 2, f/a=0.022

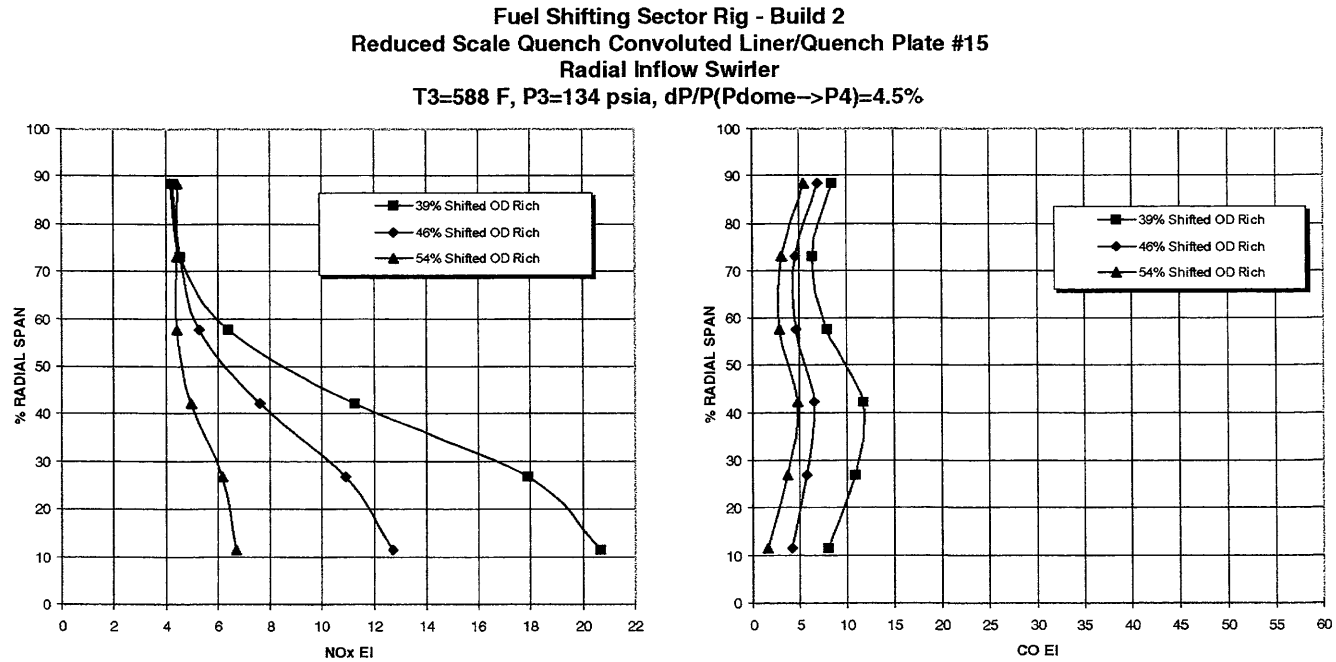

Figure VI - 23 NOx and CO Emissions Profiles for OD Rich Operation at 34% Thrust LTO Condition for Fuel Shifting Rig Build 2, f/a=0.019

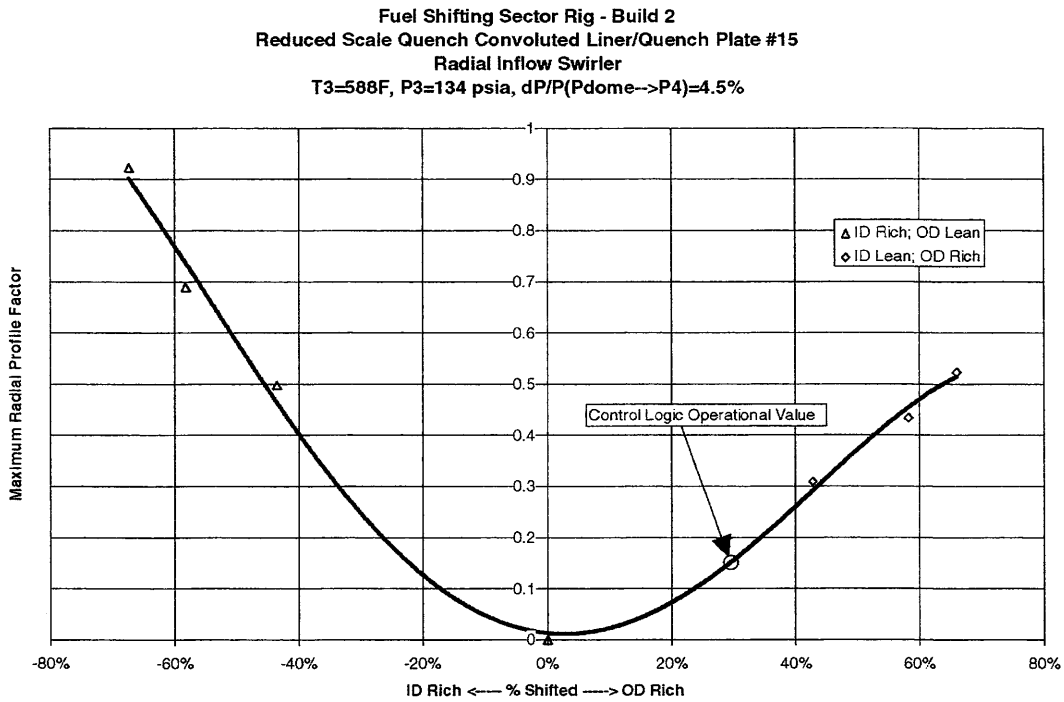

Figure VI - 24 Maximum Temperature Profile Factor at 34% Thrust LTO Condition for Fuel Shifting Sector Rig Build 2

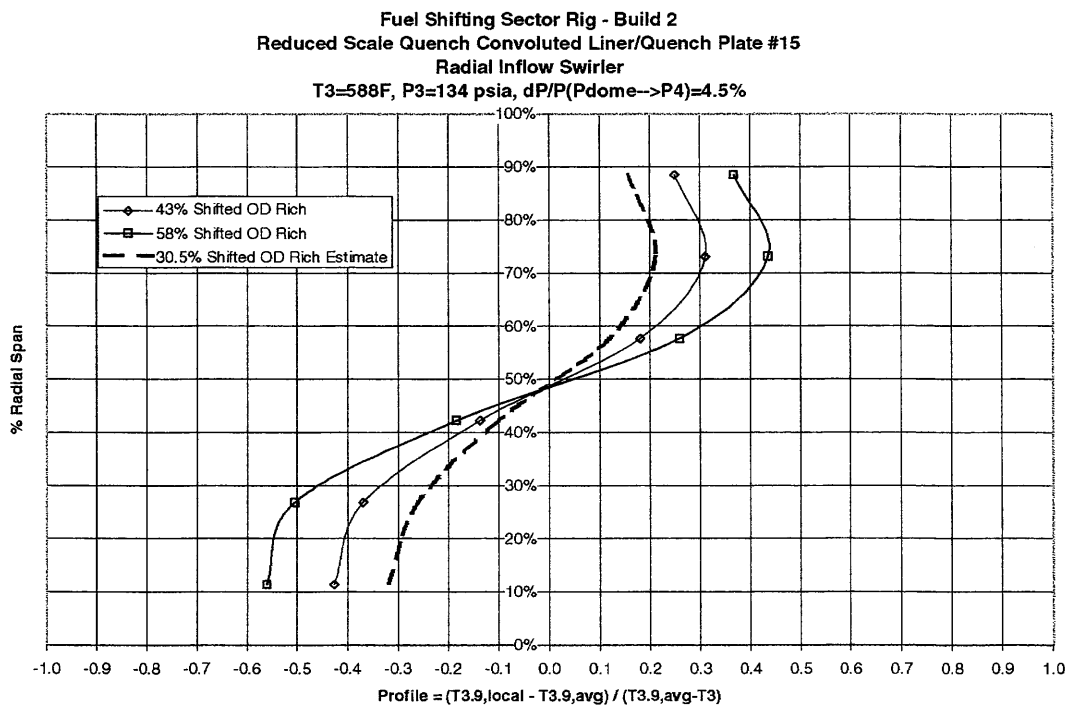

Figure VI - 25 Temperature Profile Factor Over Radial Span at 34% Thrust LTO Condition for Fuel Shifting Rig Build 2

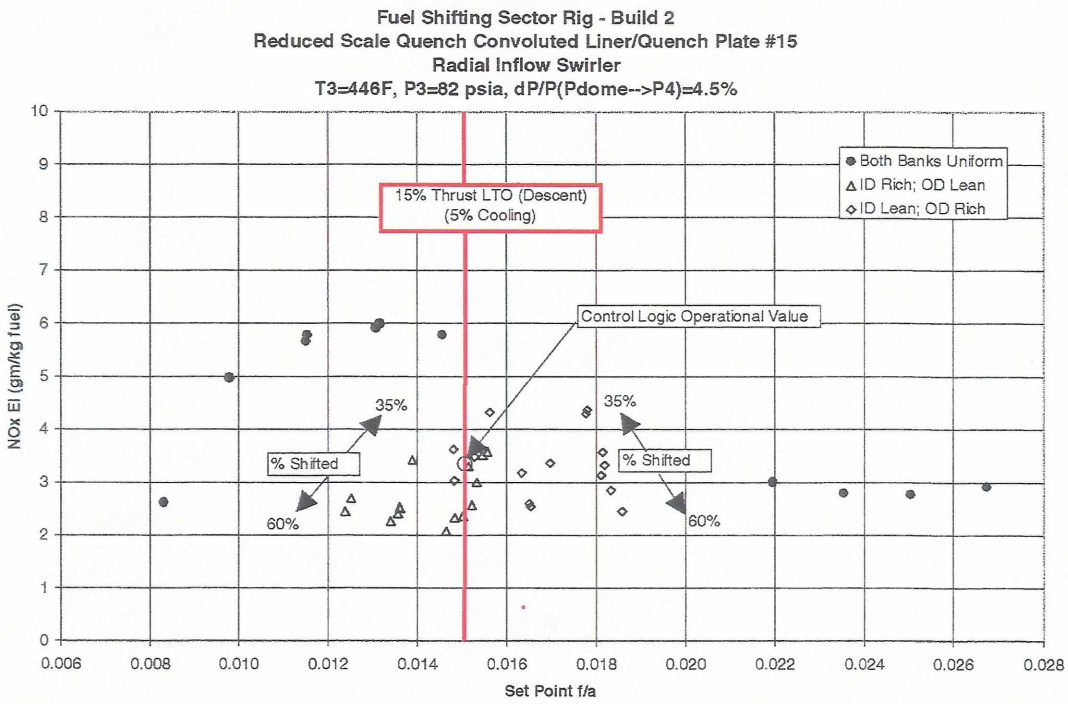

Figure VI - 26 NOx Emissions at 15% Thrust LTO Condition for Fuel Shifting Rig Build 2

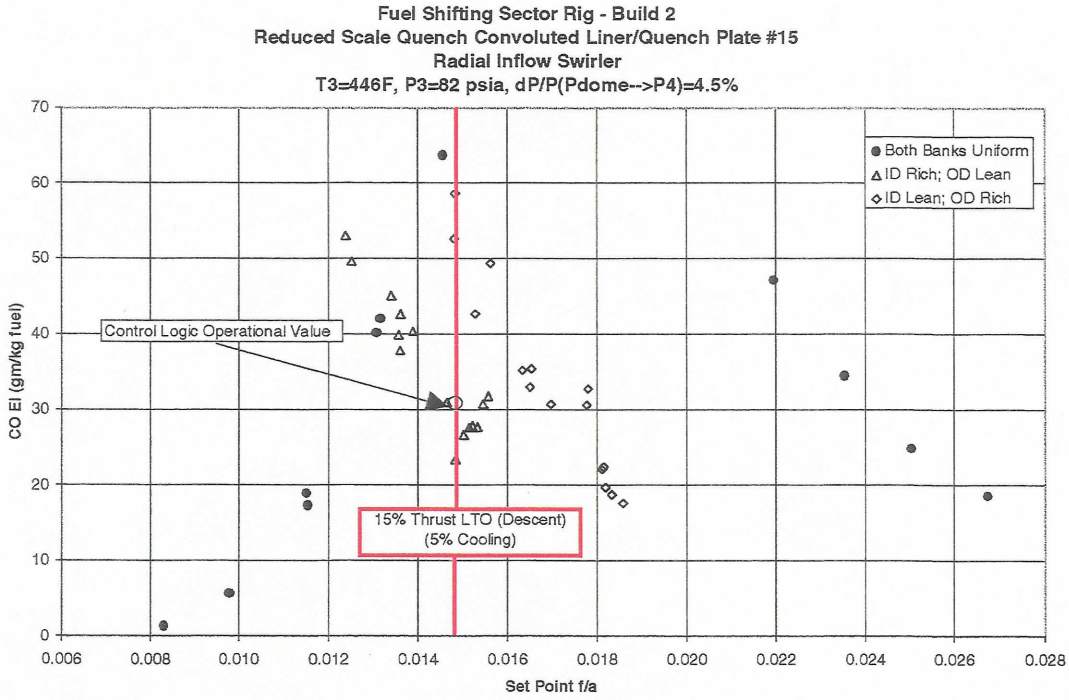

Figure VI - 27 CO Emissions at 15% Thrust LTO Condition for Fuel Shifting Rig Build 2

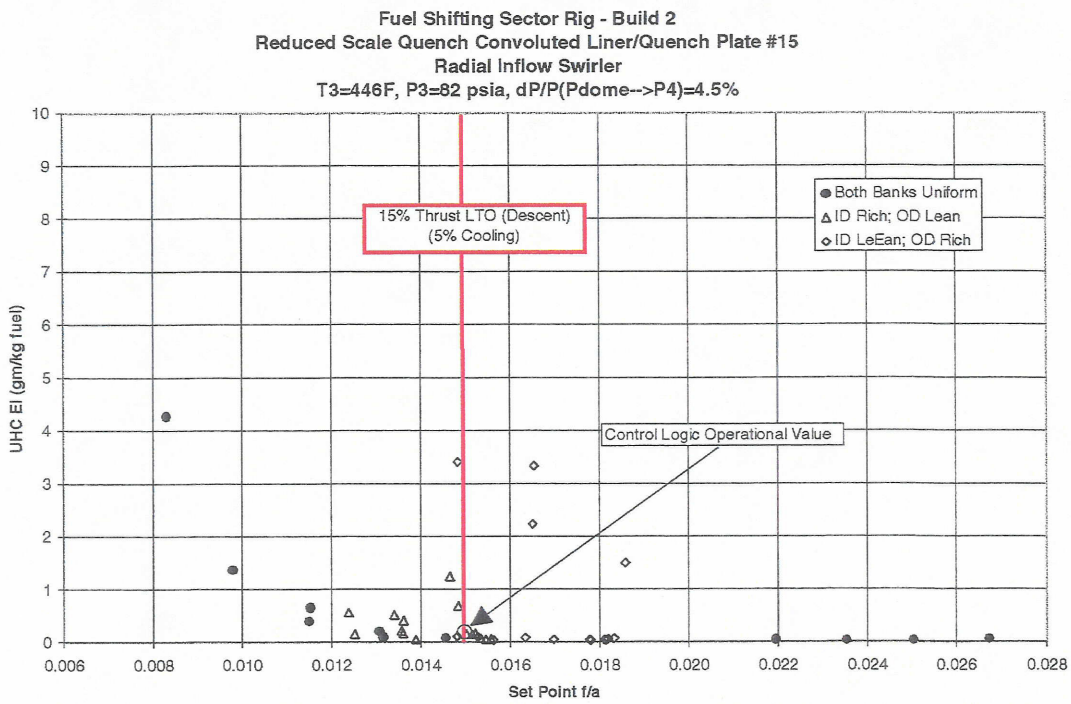

Figure VI - 28 UHC Emissions at 15% Thrust LTO Condition for Fuel Shifting Rig Build 2

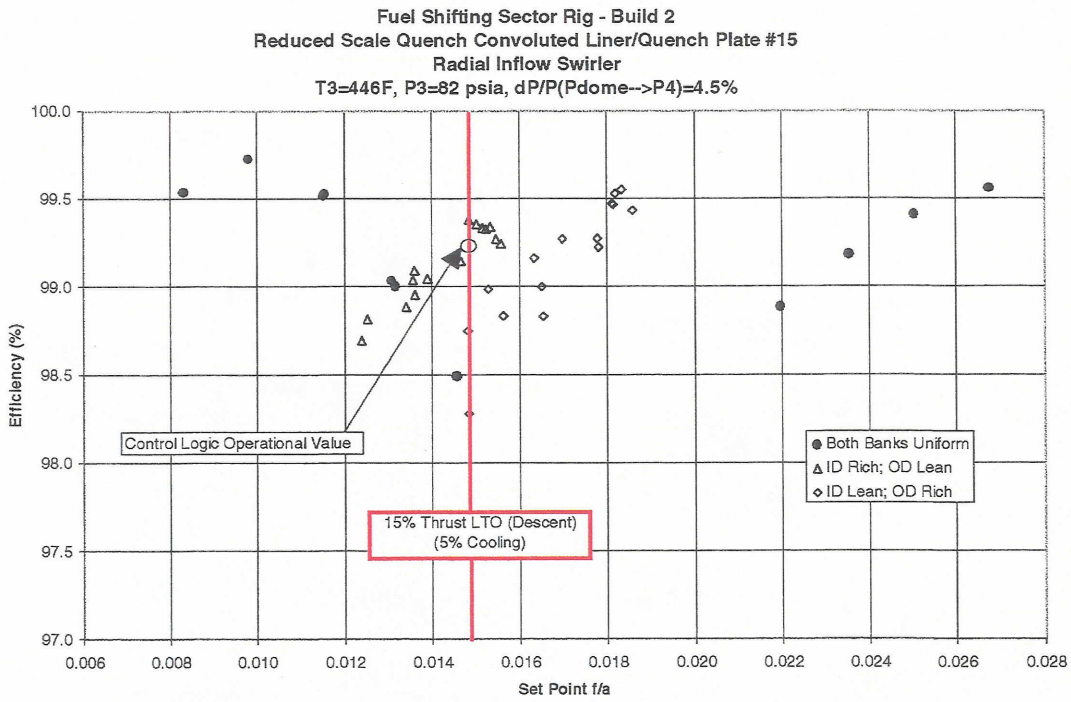

Figure VI - 29 Efficiency at 15% Thrust LTO Condition for Fuel Shifting Rig Build 2

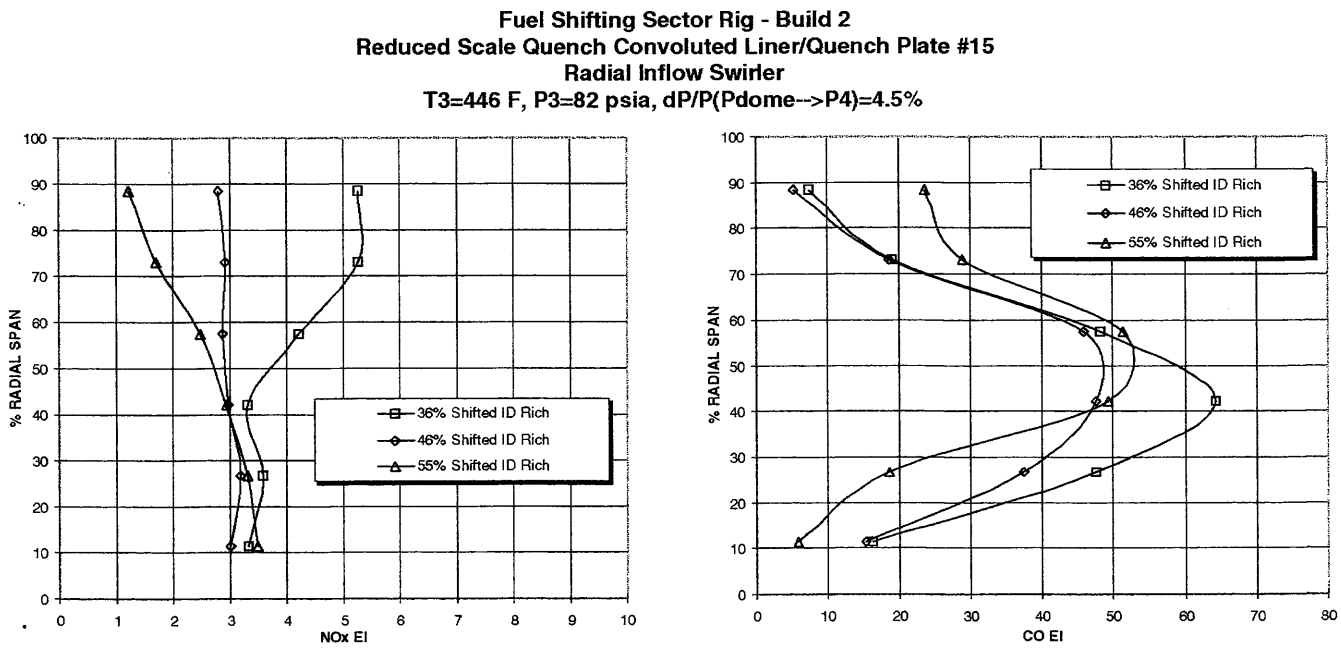

Figure VI - 30 NOx and CO Emissions Profiles for ID Rich Operation at 15% Thrust LTO Condition for Fuel Shifting Rig Build 2, f/a=0.015

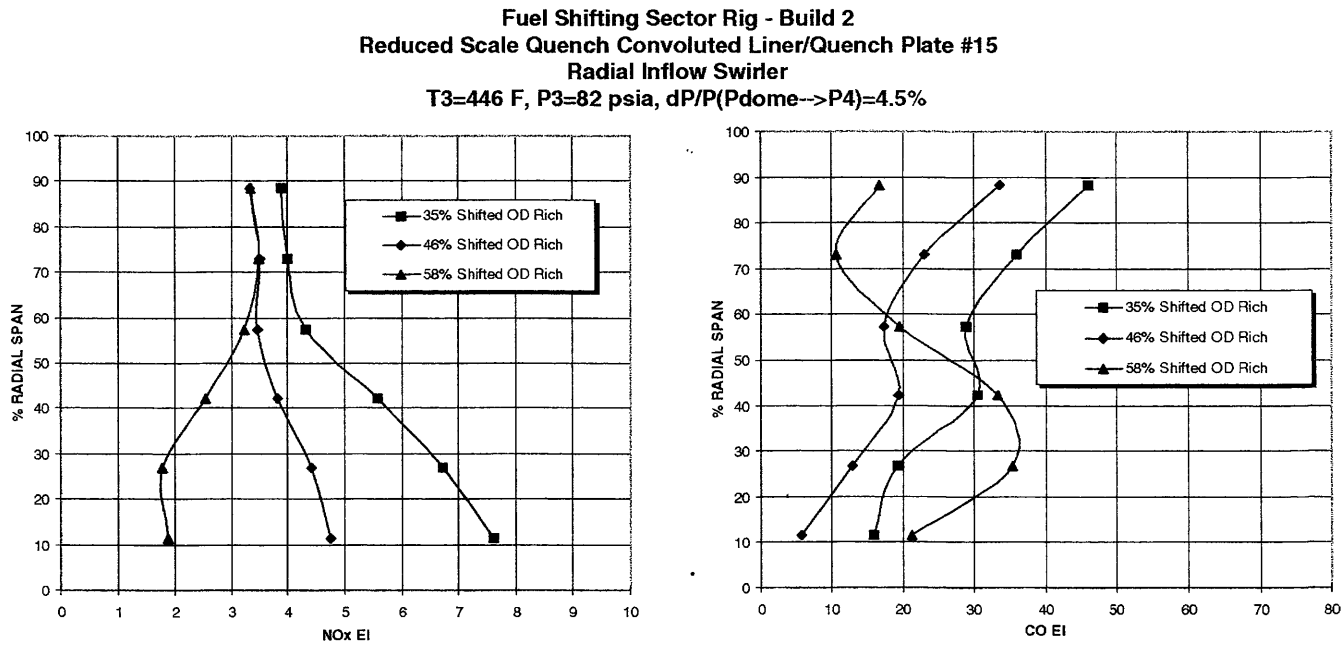

Figure VI - 31 NOx and CO Emissions Profiles for OD Rich Operation at 15% Thrust LTO Condition for Fuel Shifting Rig Build 2, f/a=0.018

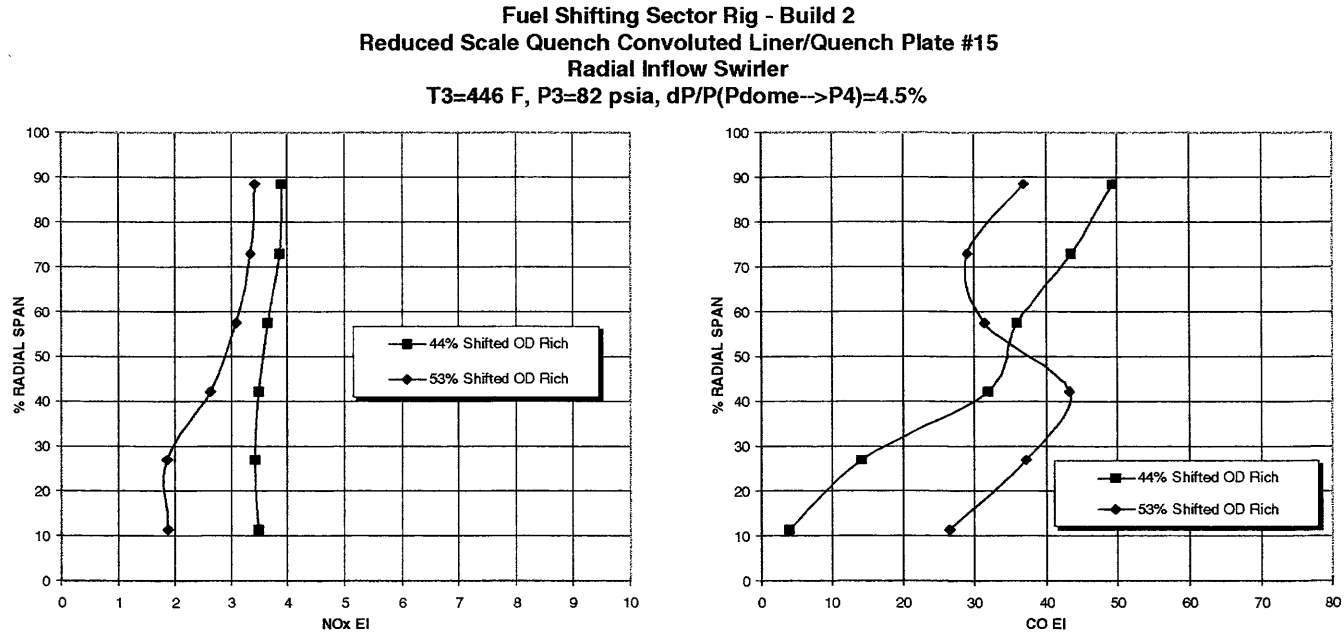

Figure VI - 32 NOx and CO Emissions Profiles for OD Rich Operation at 15% Thrust LTO Condition for Fuel Shifting Rig Build 2, f/a=0.016

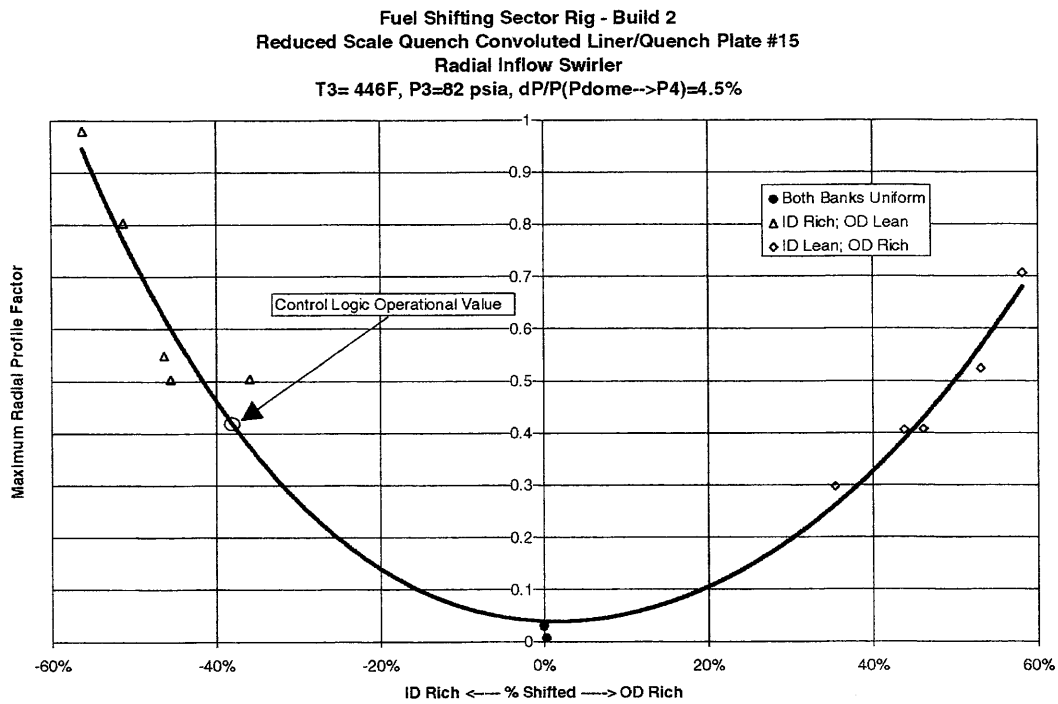

Figure VI - 33 Maximum Temperature Profile Factor at 15% Thrust LTO Condition for Fuel Shifting Rig Build 2

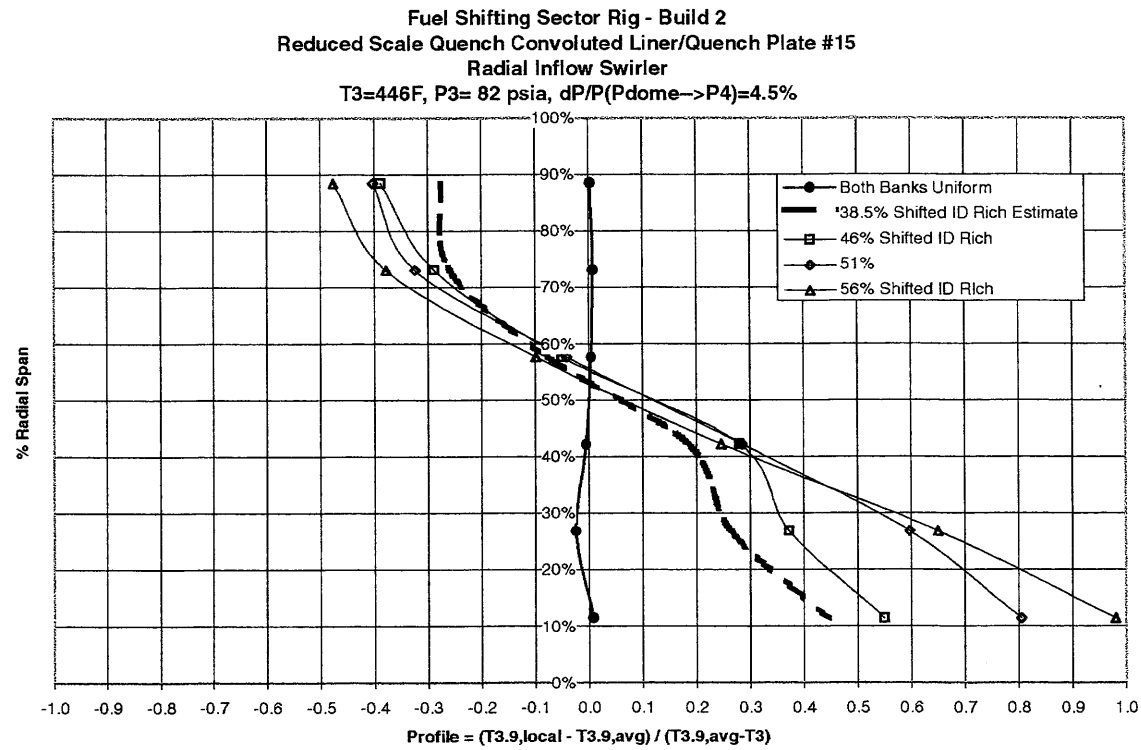

Figure VI - 34 Temperature Profile Factor Over Radial Span at 15% Thrust LTO Condition for Fuel Shifting Rig Build 2

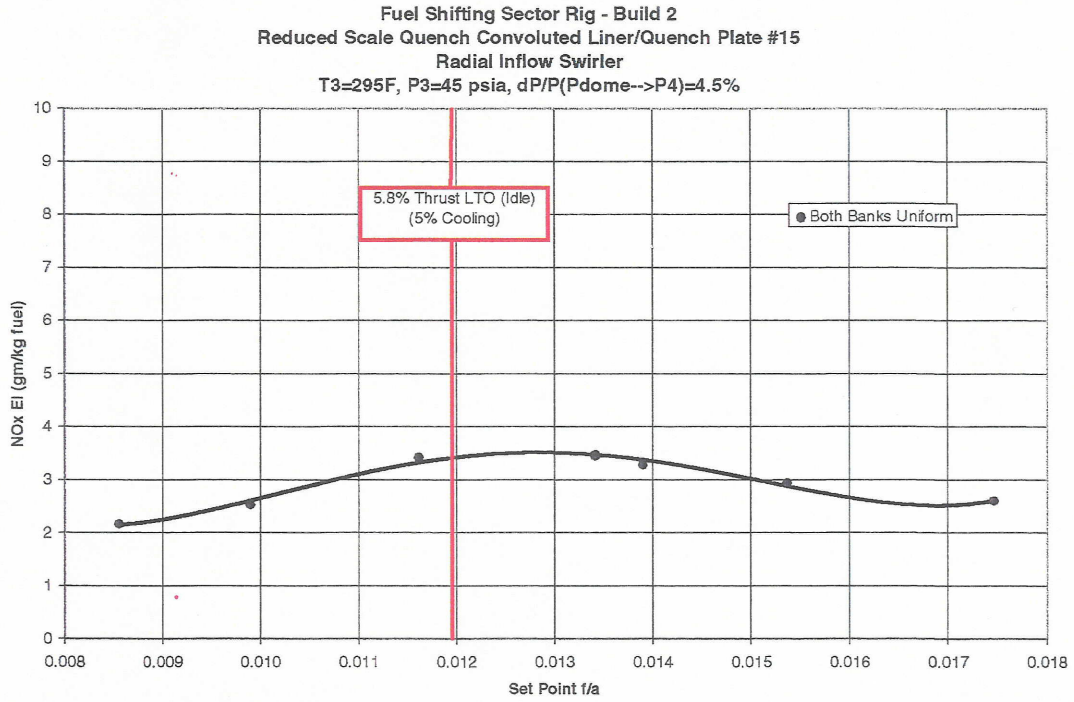

Figure VI - 35 NOx Emissions at 5.8% Thrust LTO Condition for Fuel Shifting Rig Build 2

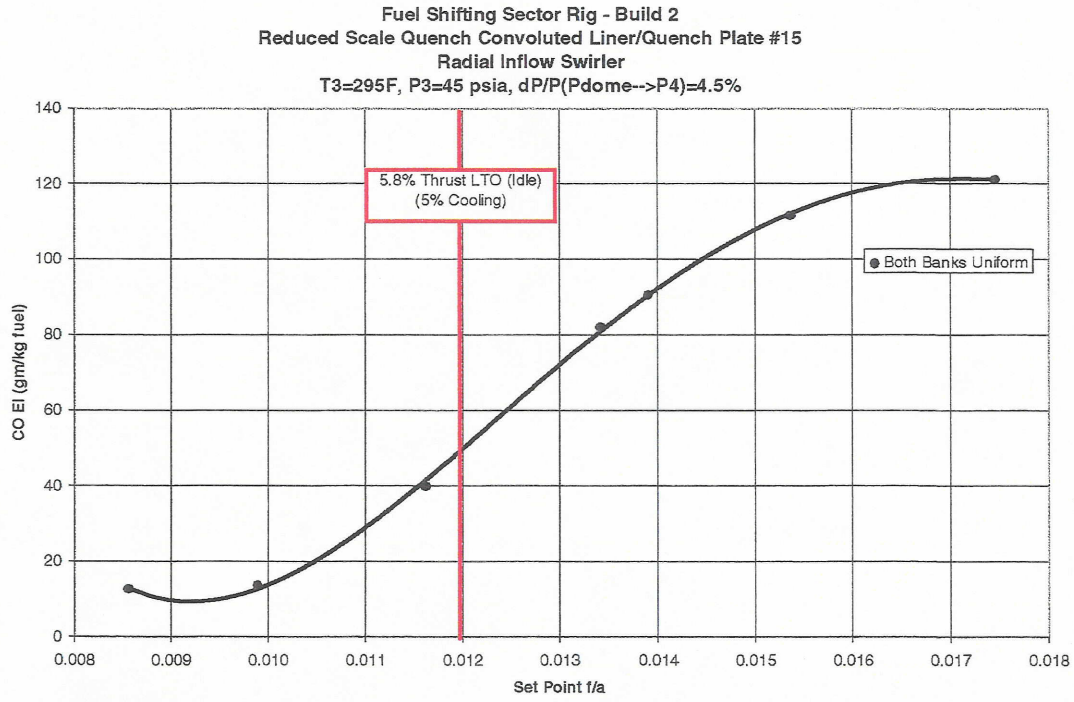

Figure VI - 36 CO Emissions at 5.8% Thrust LTO Condition for Fuel Shifting Rig Build 2

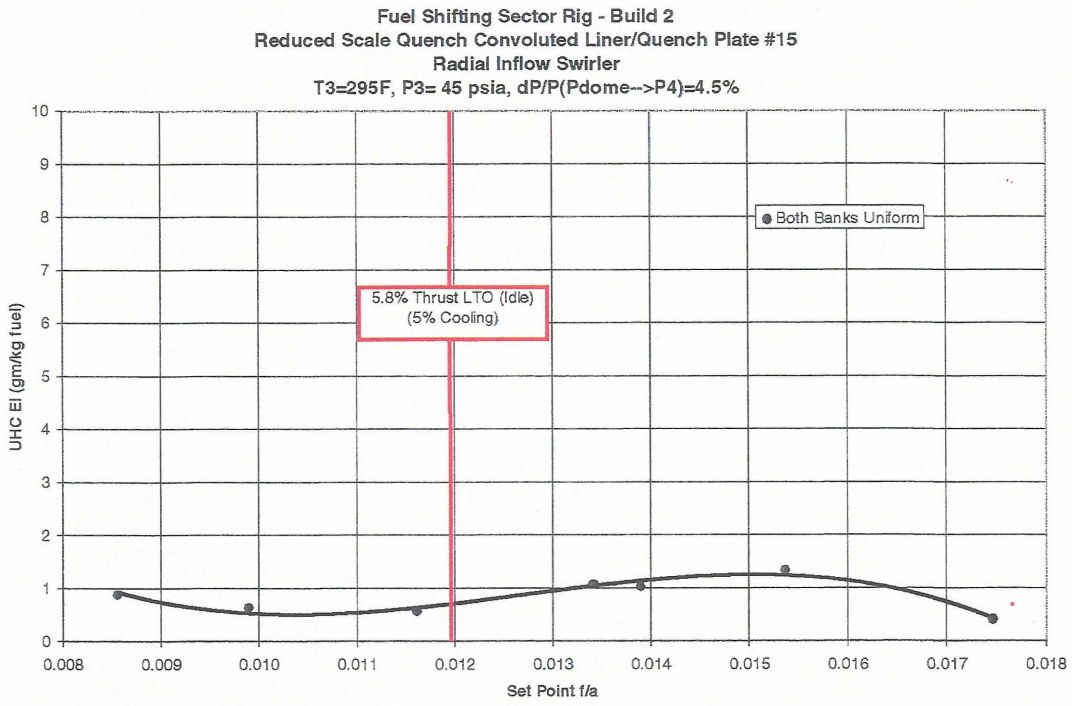

Figure VI - 37 UHC Emissions at 5.8% Thrust LTO Condition for Fuel Shifting Rig Build 2

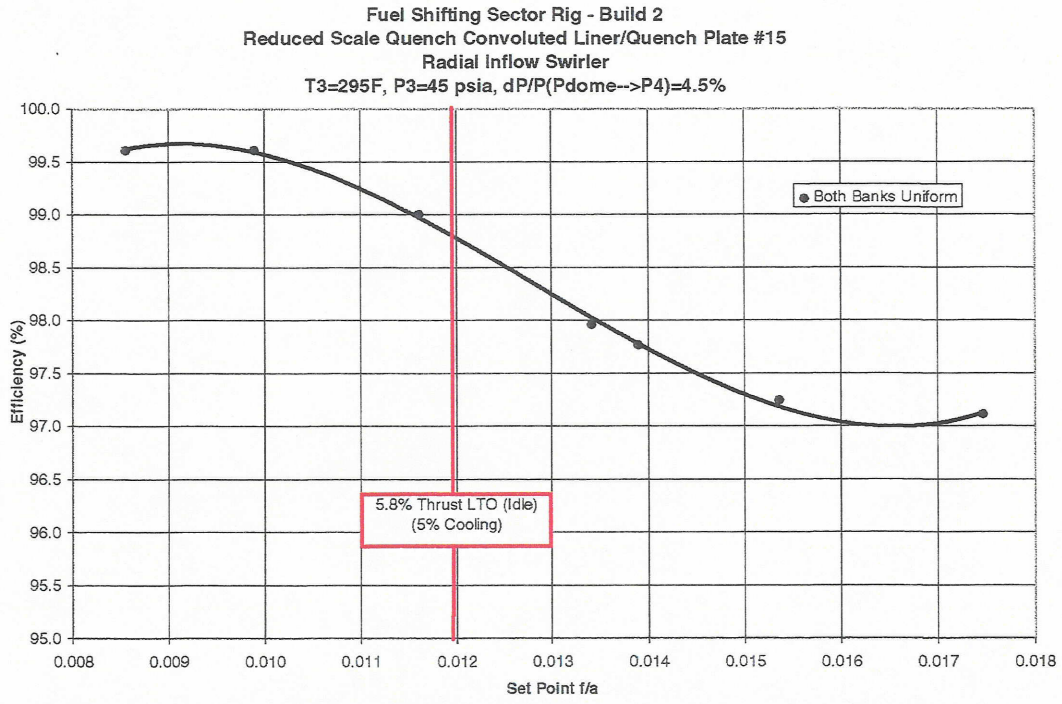

Figure VI - 38 Efficiency at 5.8% Thrust LTO Condition for Fuel Shifting Rig Build 2

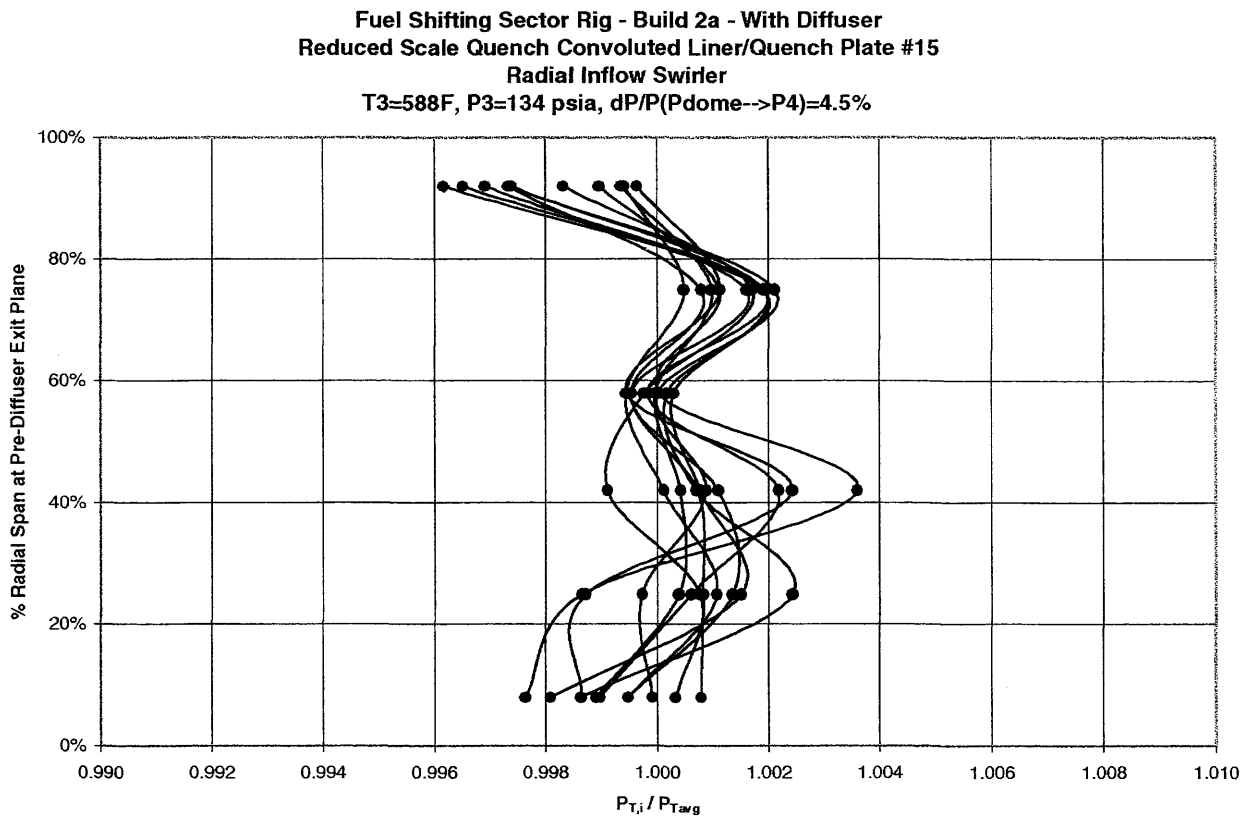

Figure VI - 39 Total Pressure Profiles Over Pre-diffuser Exit Plane for Fuel Shifting Rig Build 2a

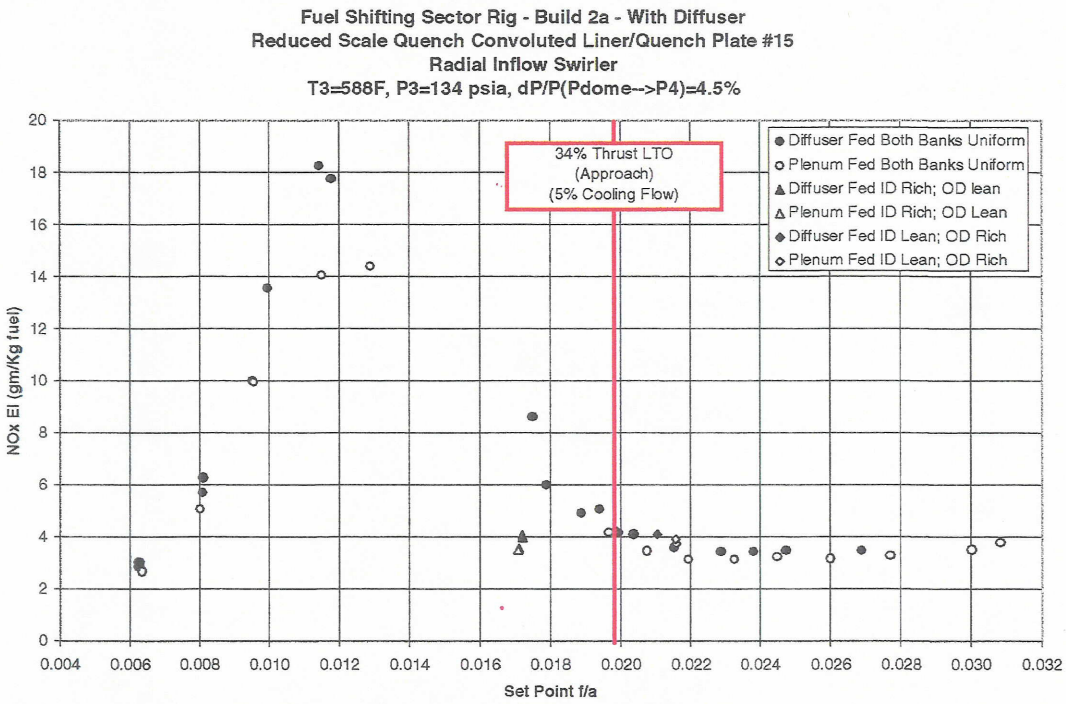

Figure VI - 40 NOx Emissions at 34% Thrust LTO Condition for Fuel Shifting Rig Build 2a

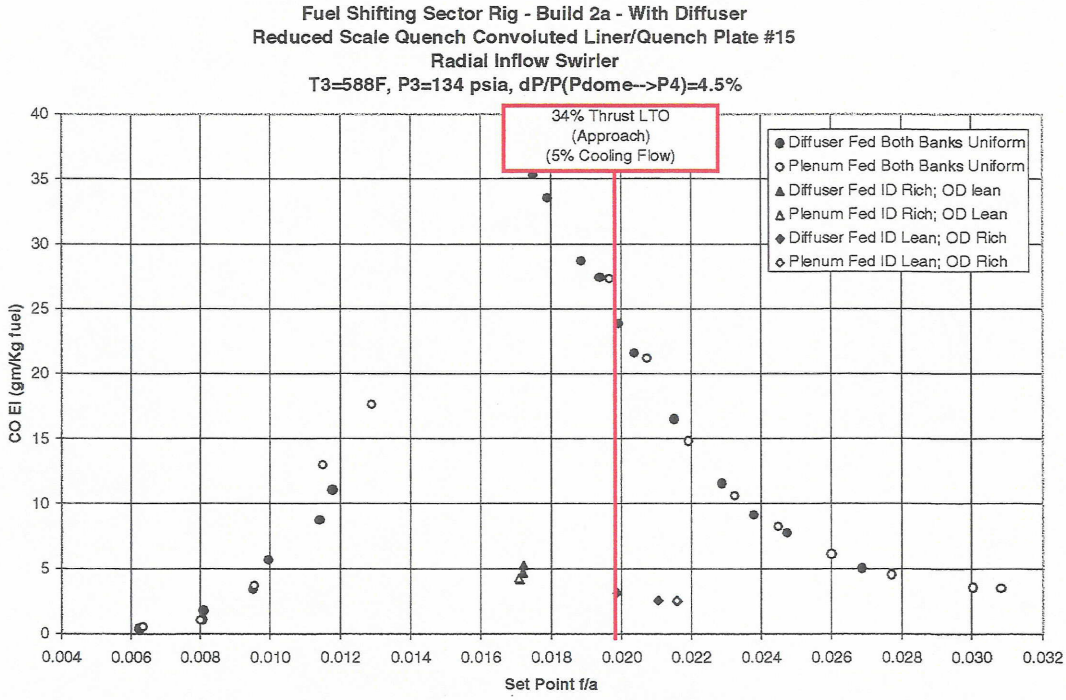

Figure VI - 41 CO Emissions at 34% Thrust LTO Condition for Fuel Shifting Rig Build 2a

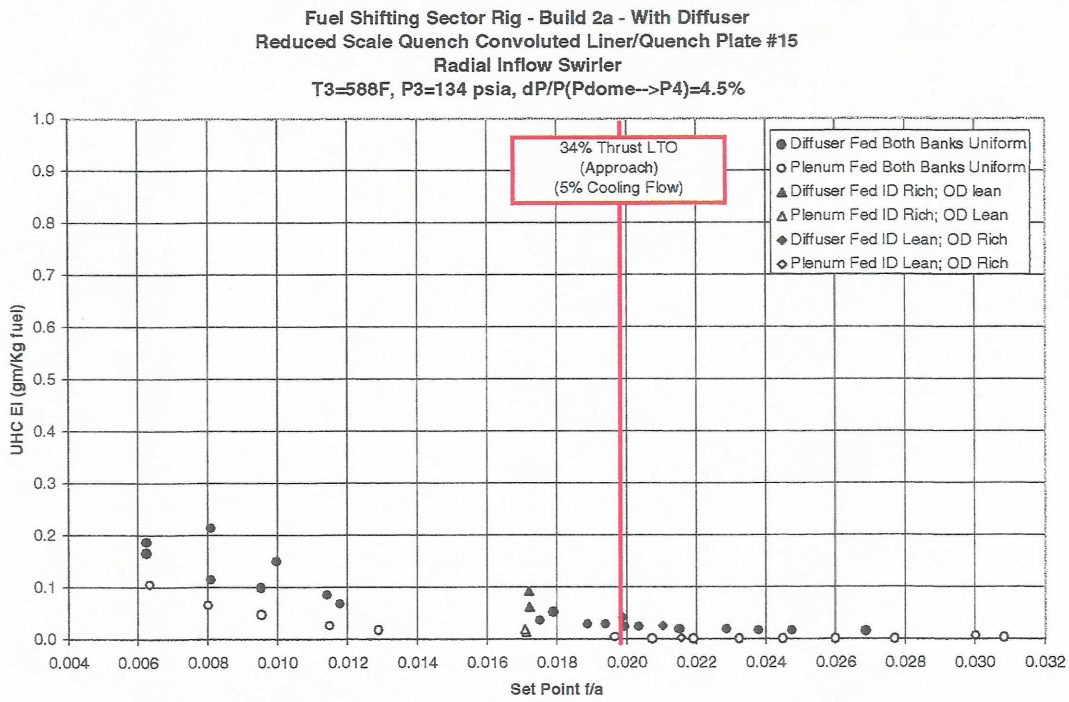

Figure VI - 42 UHC Emissions at 34% Thrust LTO Condition for Fuel Shifting Rig Build 2a

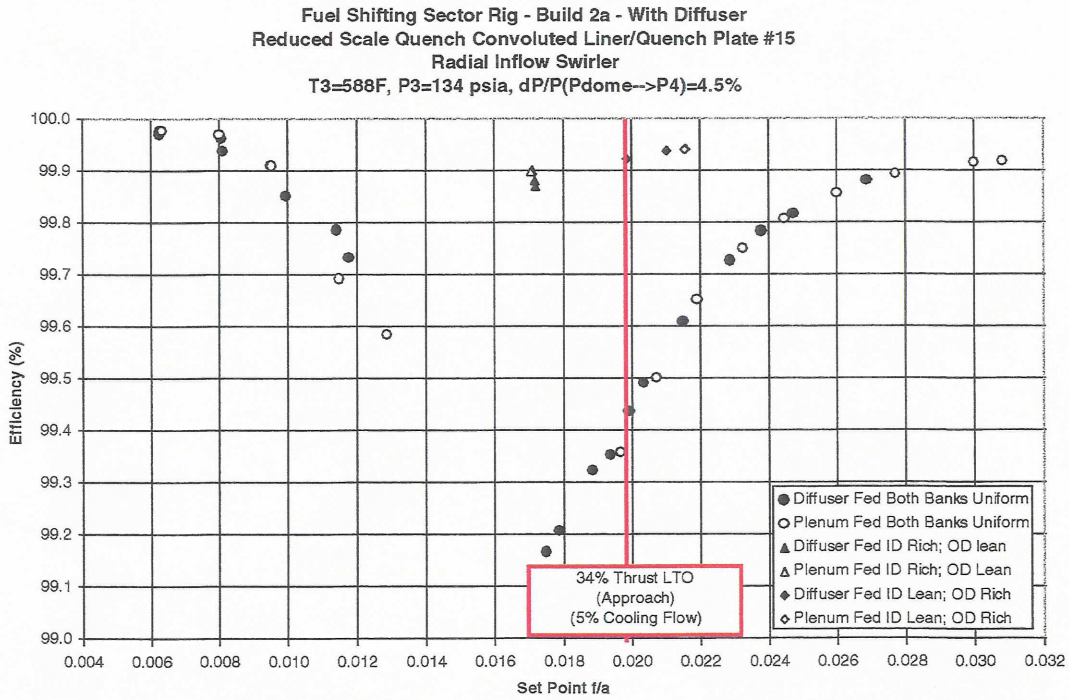

Figure VI - 43 Efficiency at 34% Thrust LTO Condition for Fuel Shifting Rig Build 2a

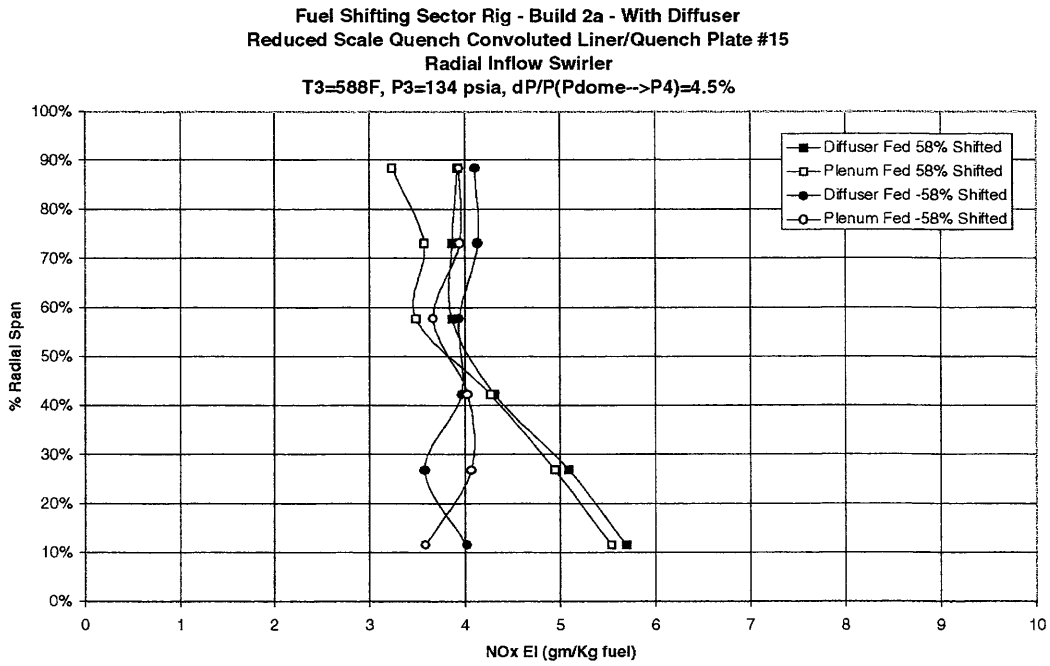

Figure VI - 44 NOx Emissions Profiles for Uniform and ID Rich Operation at 34% Thrust LTO Condition for Fuel Shifting Rig Build 2a

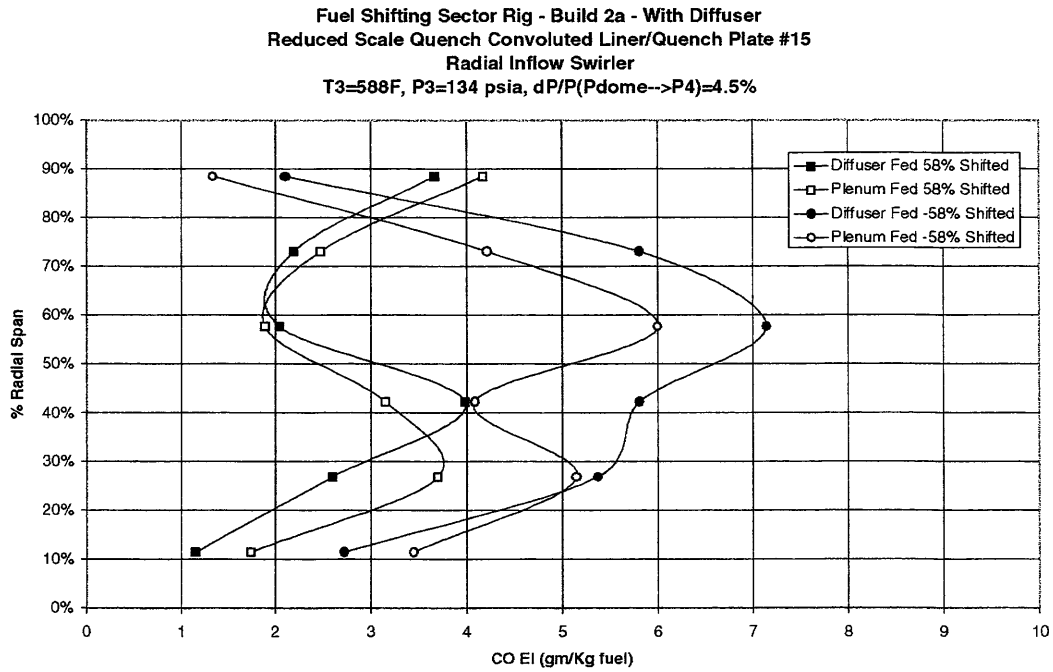

Figure VI - 45 CO Emissions Profiles for Uniform and ID Rich Operation at 34% Thrust LTO Condition for Fuel Shifting Rig Build 2a

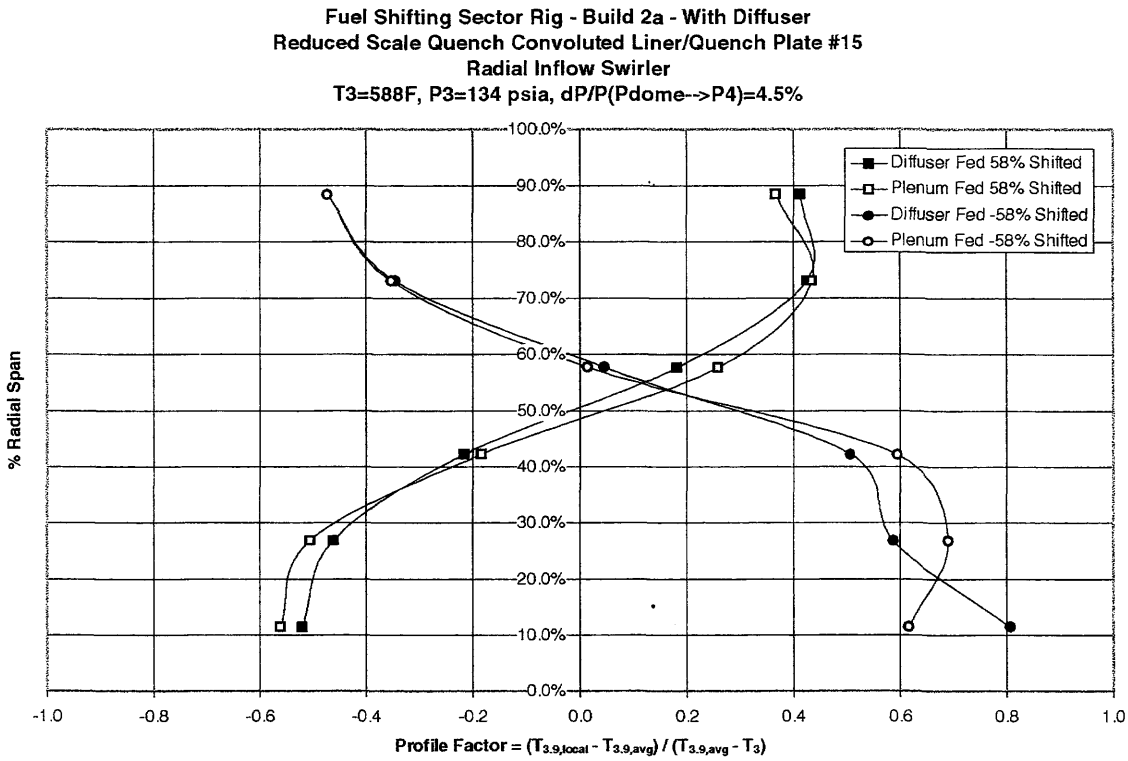

Figure VI - 46 Temperature Profile Factor Over Radial Span at 34% Thrust LTO Condition for Fuel Shifting Rig Build 2a

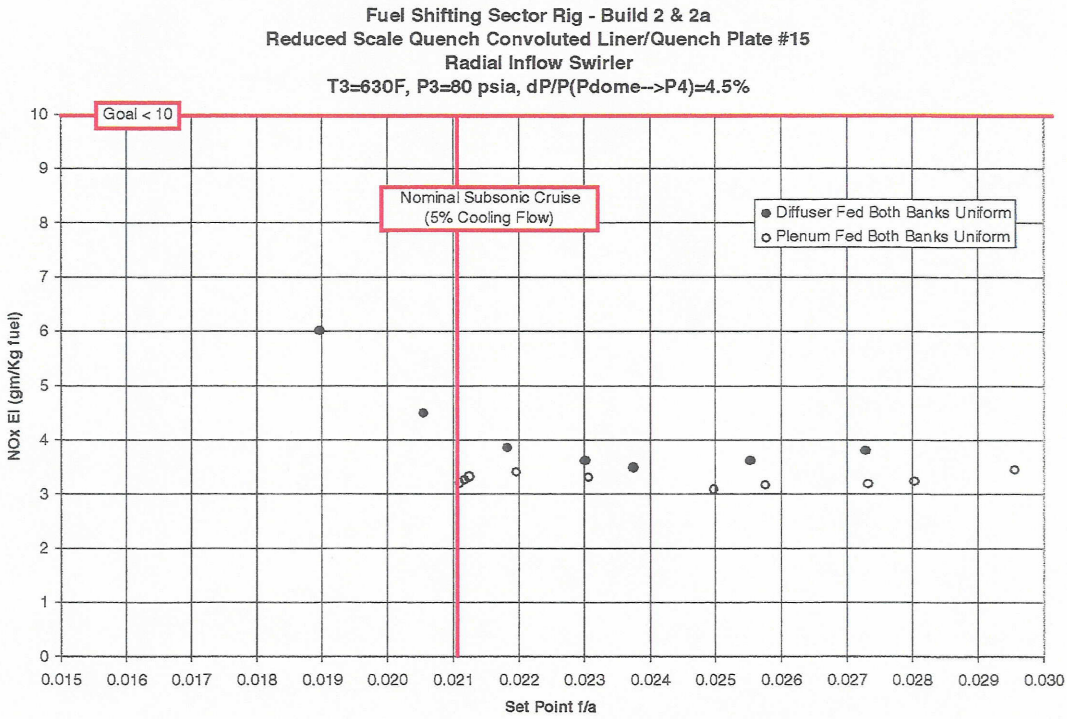

Figure VI - 47 NO_x Emissions at Subsonic Cruise Condition with Uniform Fuel/Air Ratio for Fuel Shifting Rig Builds 2 & 2a

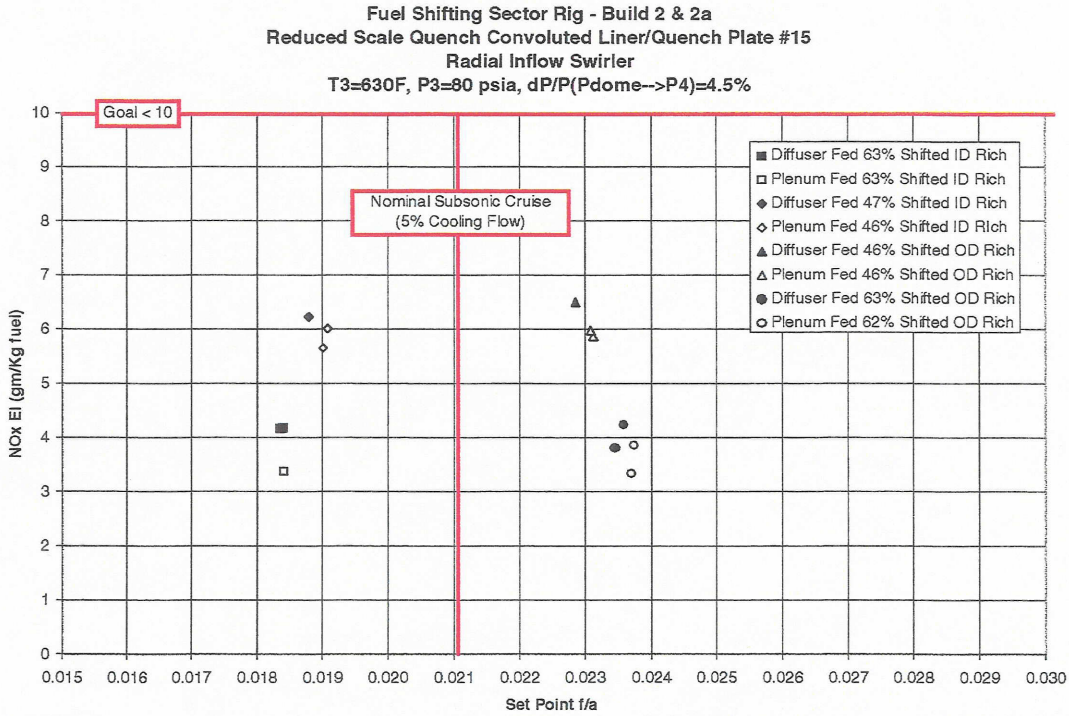

Figure VI - 48 NO_x Emissions at Subsonic Cruise Condition with Shifted Fuel/Air Ratio for Fuel Shifting Rig Builds 2 & 2a

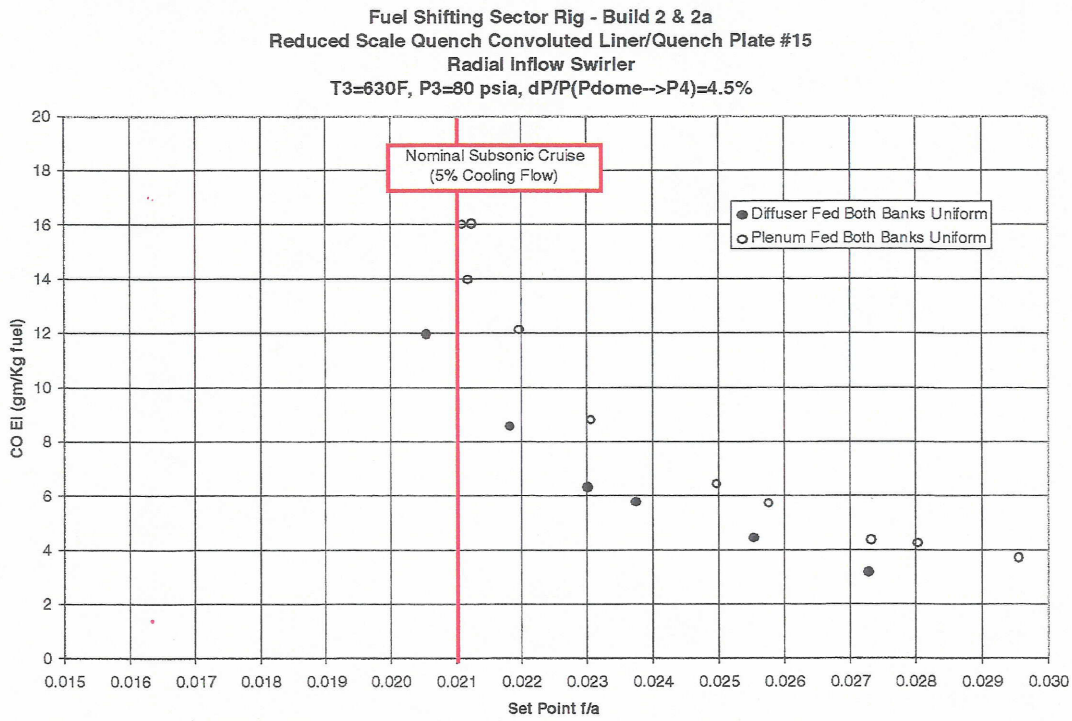

Figure VI - 49 CO Emissions at Subsonic Cruise Condition with Uniform Fuel/Air Ratio for Fuel Shifting Rig Builds 2 & 2a

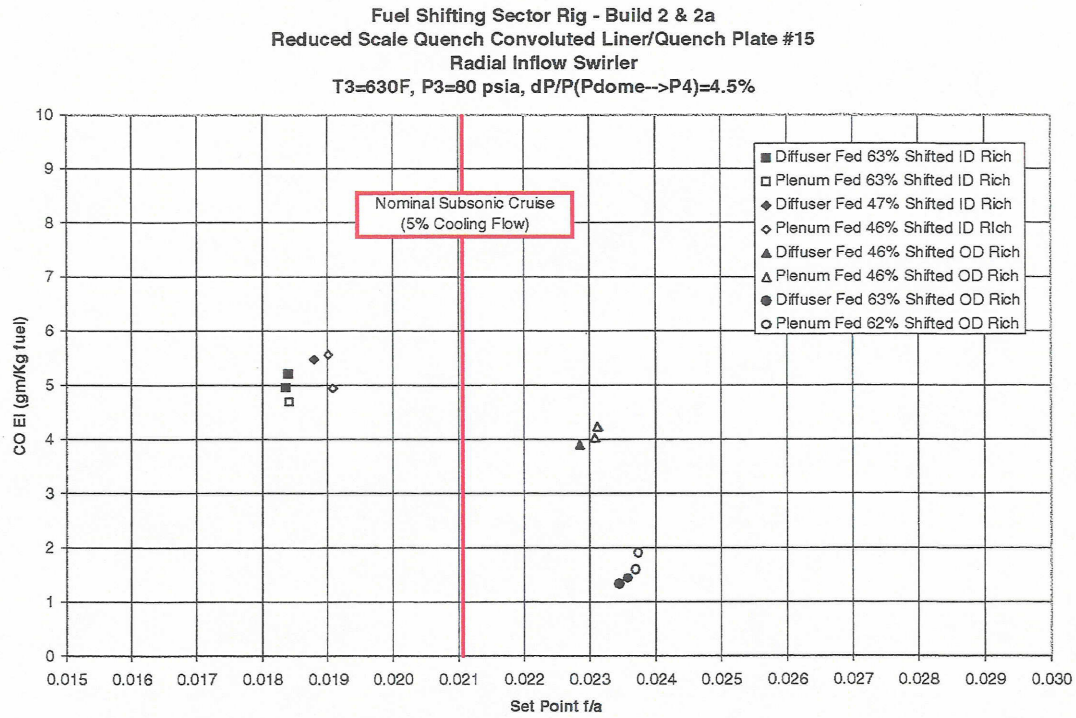

Figure VI - 50 CO Emissions at Subsonic Cruise Condition with Shifted Fuel/Air Ratio for Fuel Shifting Rig Builds 2 & 2a

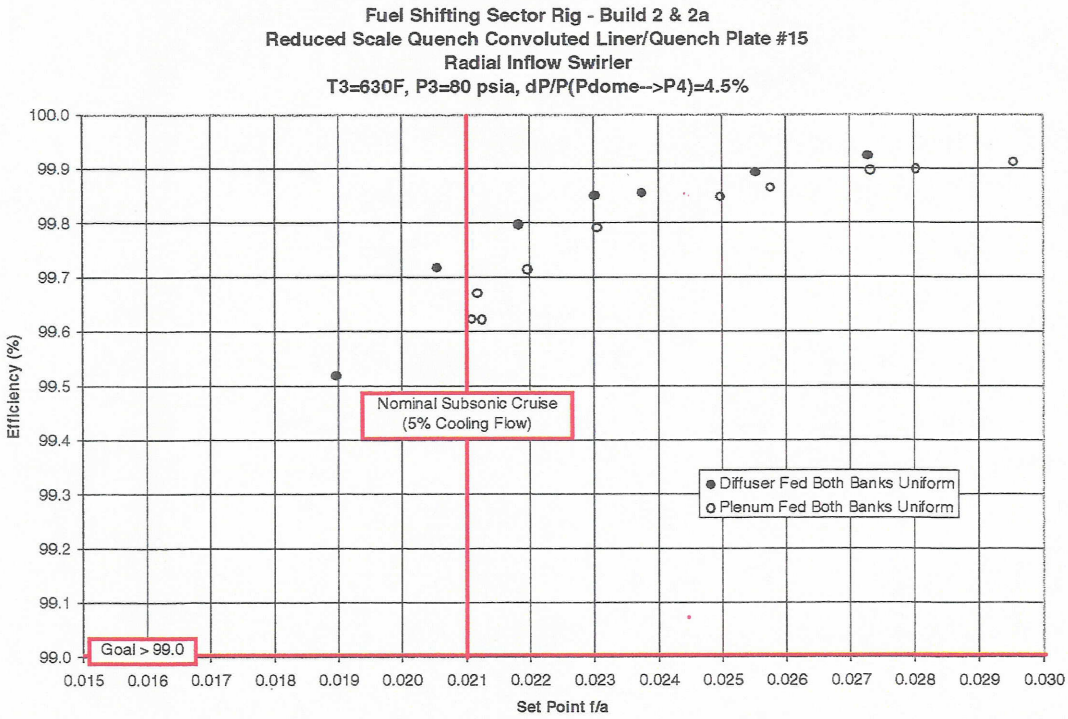

Figure VI - 51 Efficiency at Subsonic Cruise Condition with Uniform Fuel/Air Ratio for Fuel Shifting Rig Builds 2 & 2a

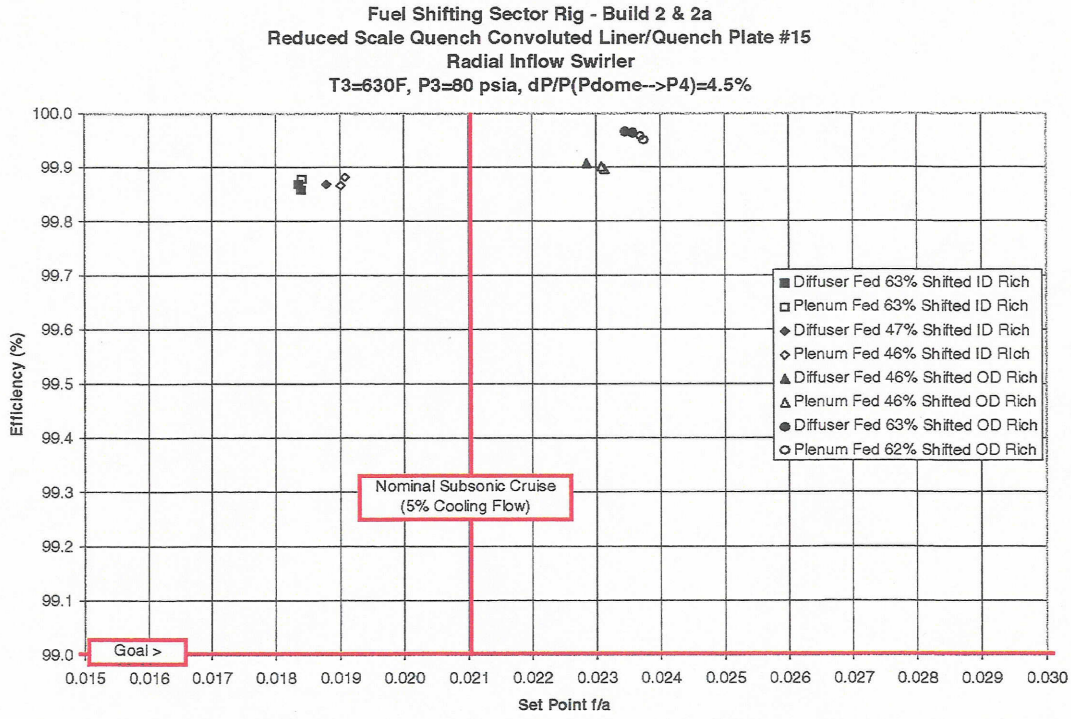

Figure VI - 52 Efficiency at Subsonic Cruise Condition with Shifted Fuel/Air Ratio for Fuel Shifting Rig Builds 2 & 2a

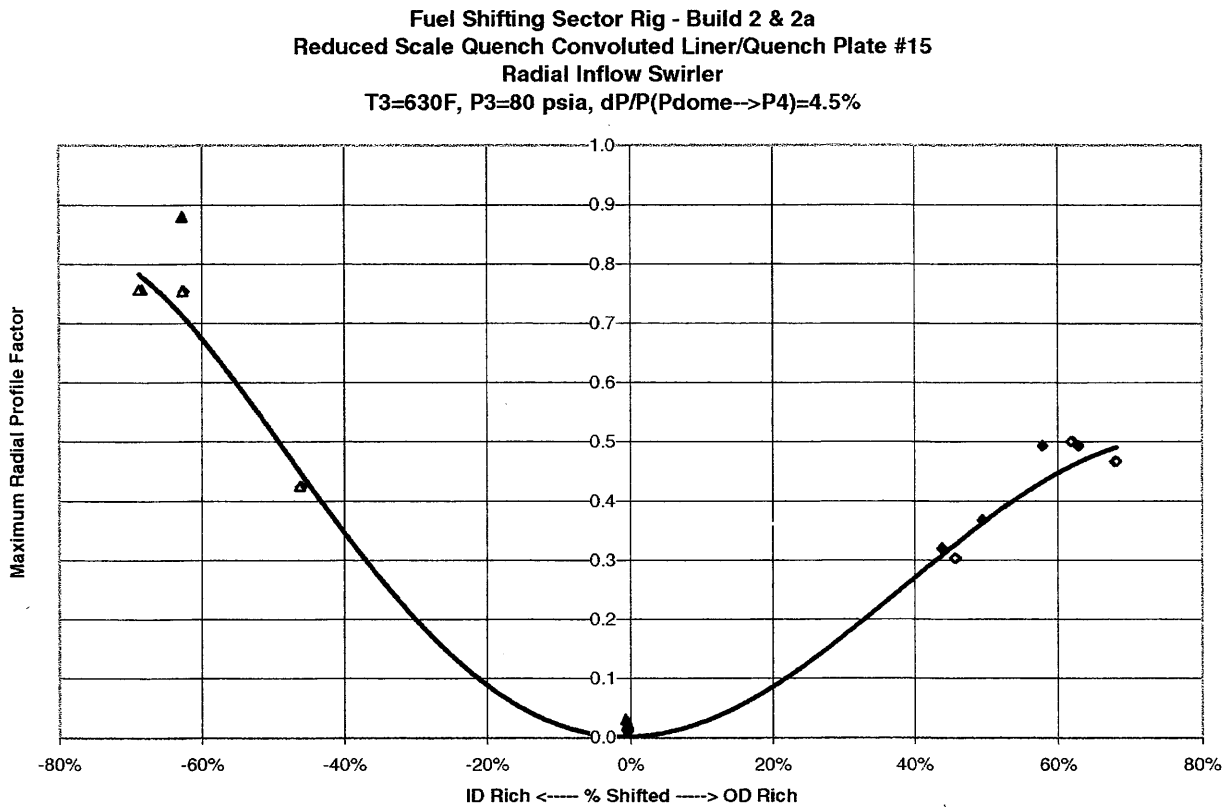

Figure VI - 53 Temperature Profile Factor at Subsonic Cruise Condition for Fuel Shifting Rig Builds 2 & 2a

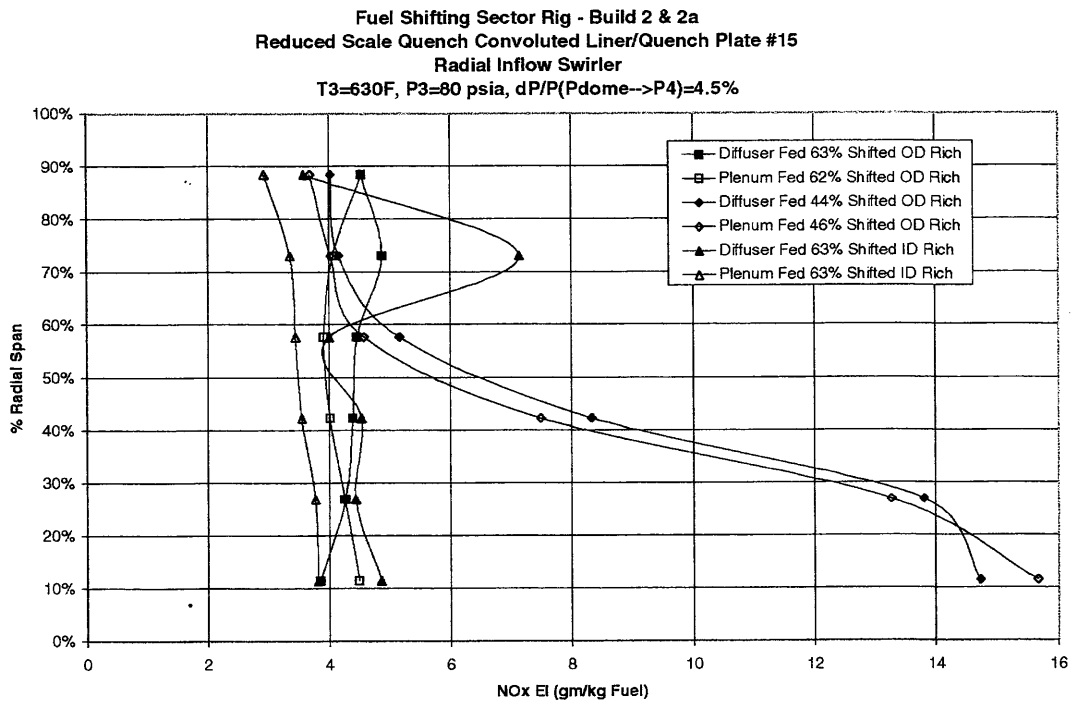

Figure VI - 54 NO_x Emissions Profiles at Subsonic Cruise Condition for Fuel Shifting Rig Builds 2 & 2a

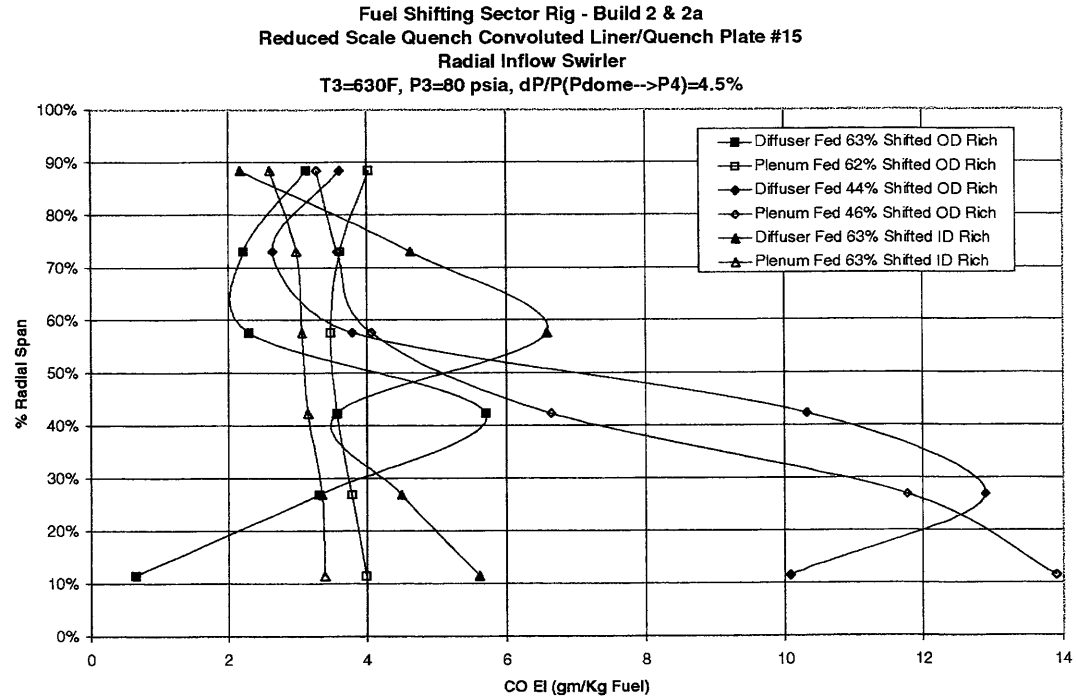

Figure VI - 55 CO Emissions Profiles at Subsonic Cruise Condition for Fuel Shifting Rig Builds 2 & 2a

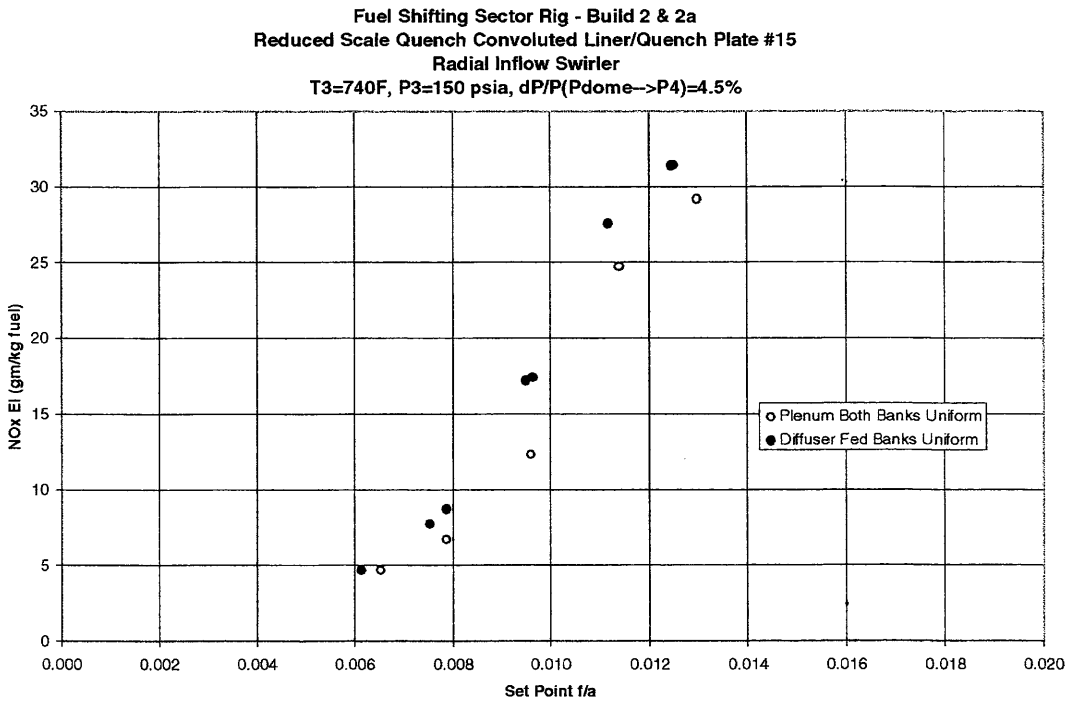

Figure VI - 56 NO_x Emissions at 65% Thrust LTO Inlet Pressure and Temperature for Fuel Shifting Rig Builds 2 & 2a

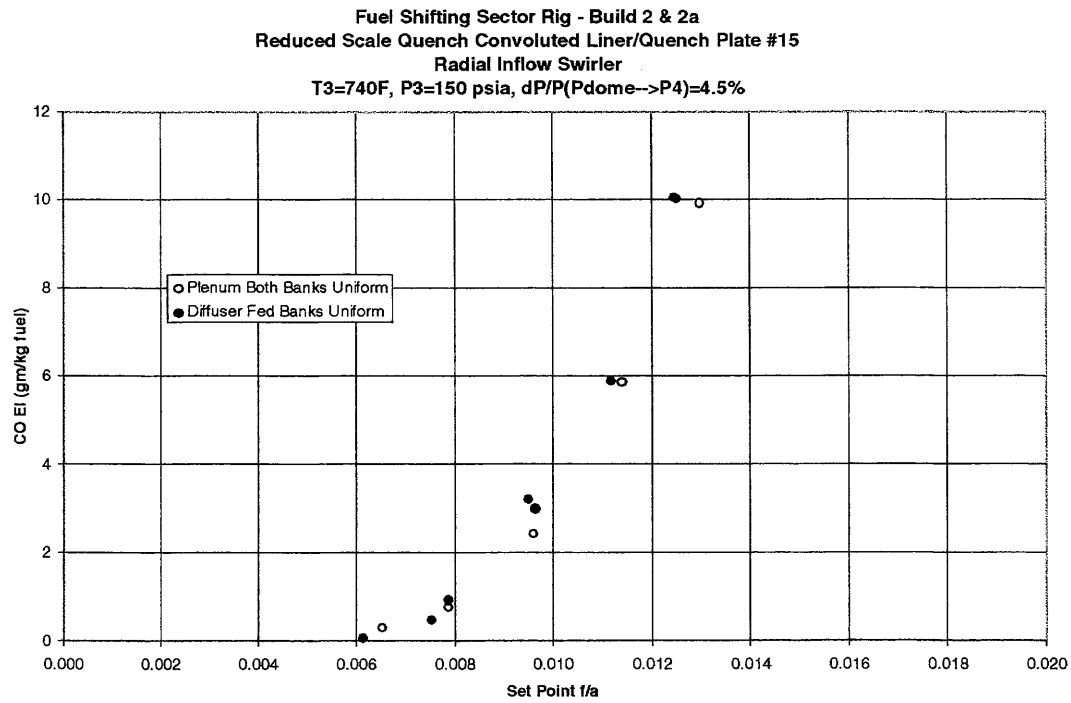

Figure VI - 57 CO Emissions at 65% Thrust LTO Inlet Pressure and Temperature for Fuel Shifting Rig Builds 2 & 2a

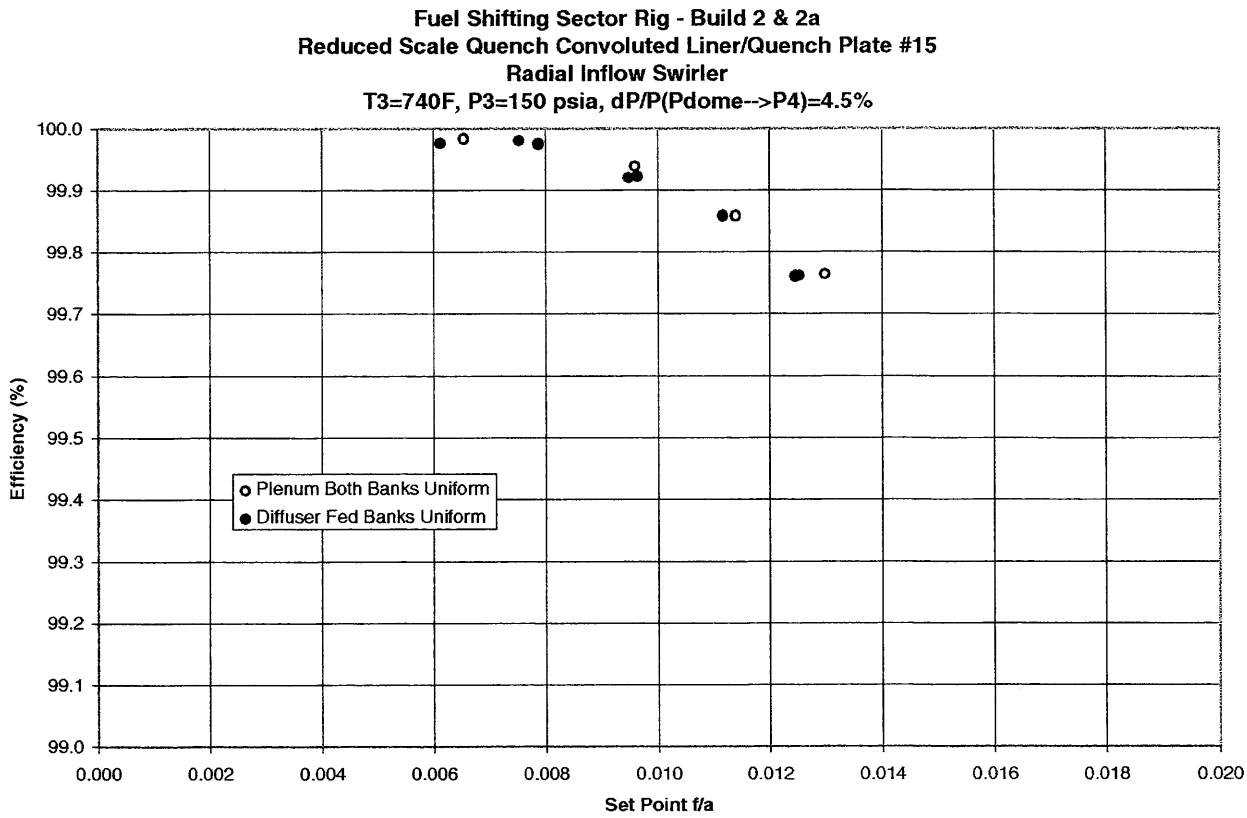

Figure VI - 58 Efficiency at 65% Thrust LTO Inlet Pressure and Temperature for Fuel Shifting Rig Builds 2 & 2a

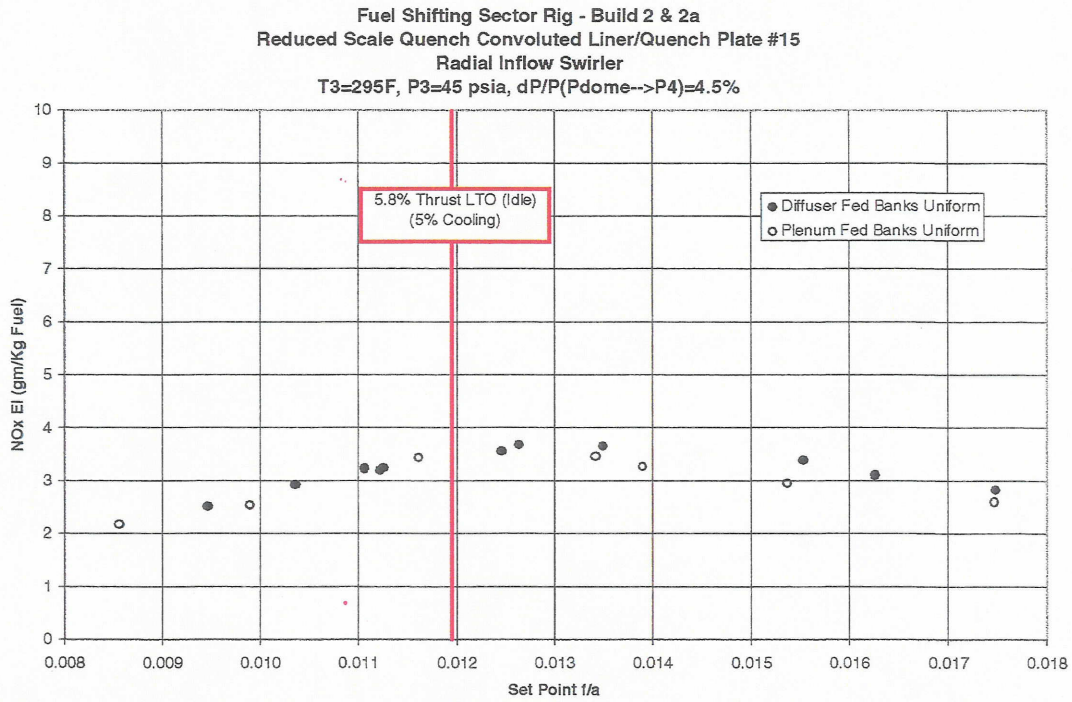

Figure VI - 59 NO_x Emissions at 5.8% Thrust LTO Condition for Fuel Shifting Rig Builds 2 & 2a

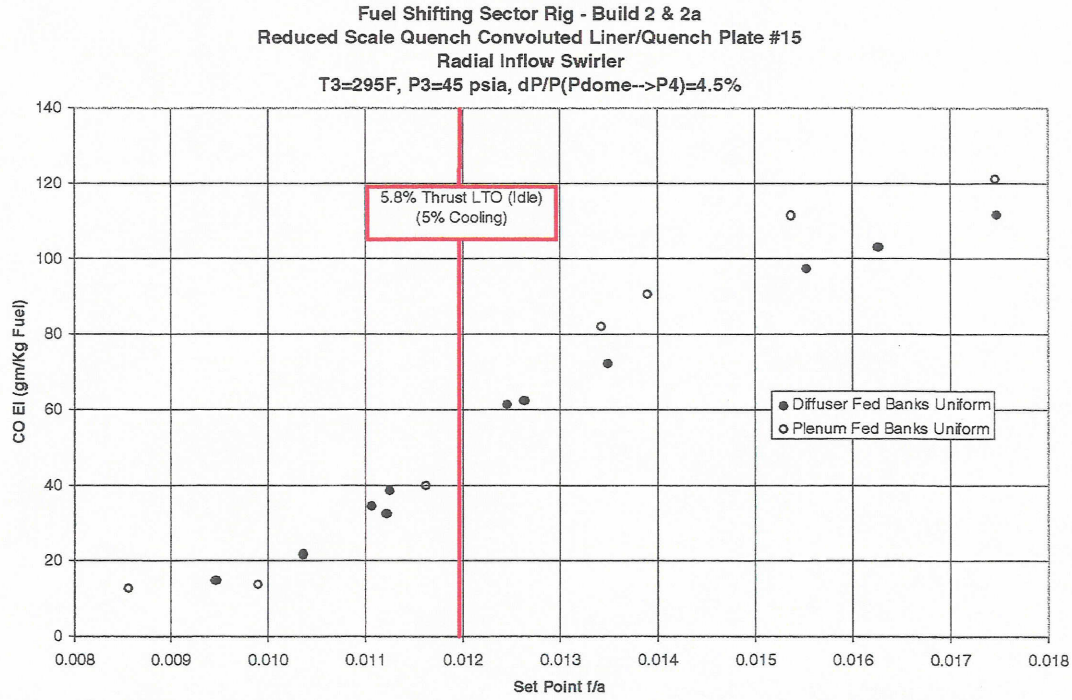

Figure VI - 60 CO Emissions at 5.8% Thrust LTO Condition for Fuel Shifting Rig Builds 2 & 2a

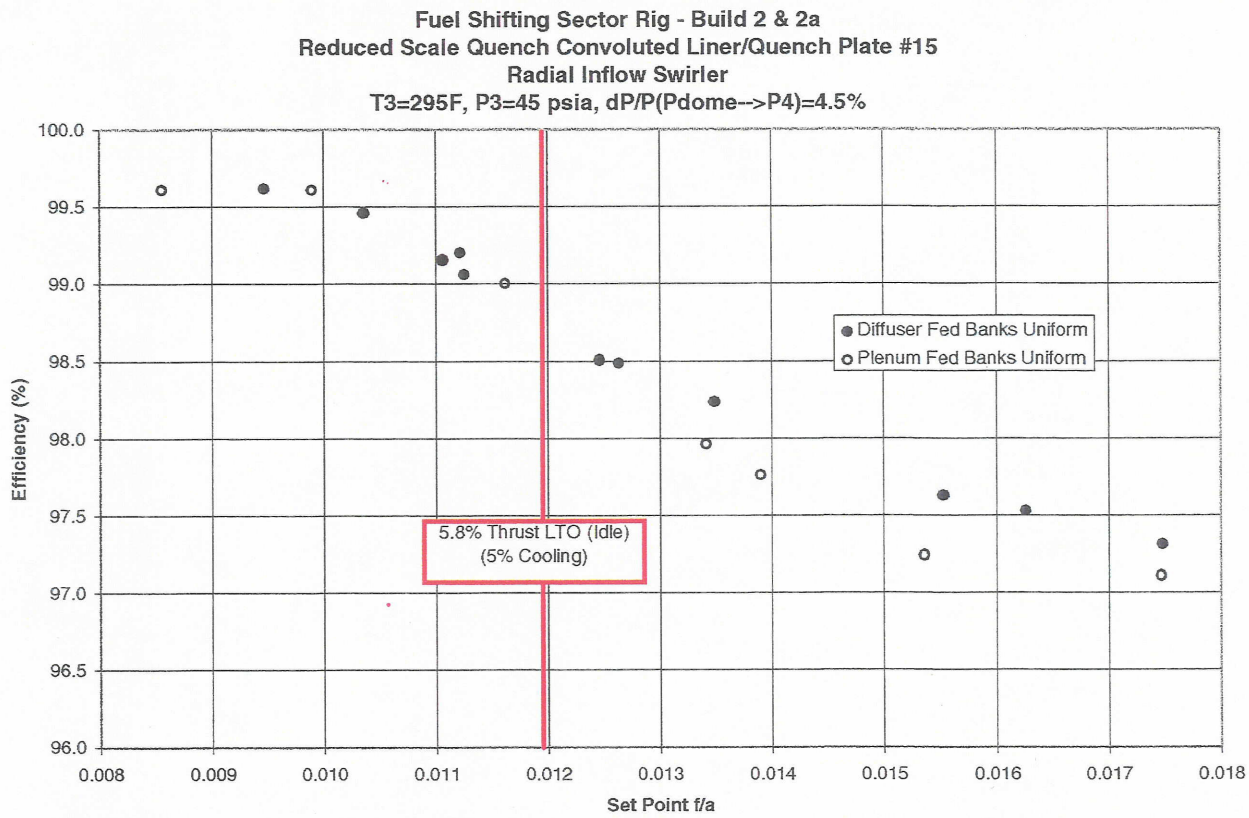

Figure VI - 61 Efficiency at 5.8% Thrust LTO Condition for Fuel Shifting Rig Builds 2 & 2a

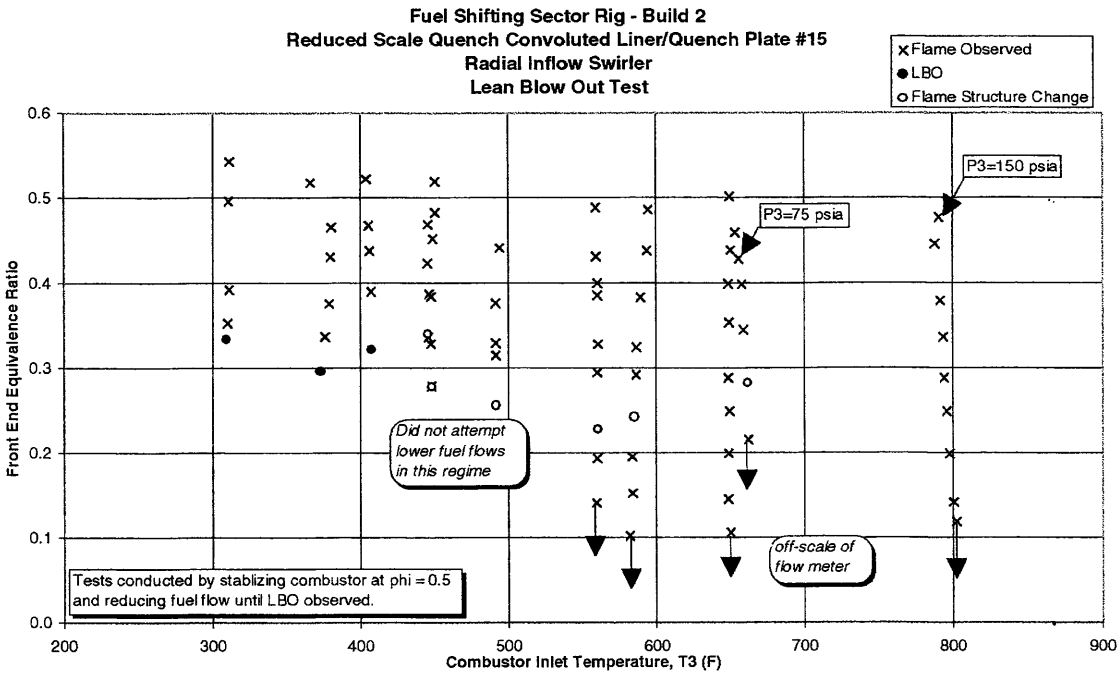

Figure VI - 62 Lean Blowout Equivalence Ratio as a Function of Temperature and Pressure for Fuel Shifting Rig Build 2

REPORT DOCUMENTATION PAGE

Form Approved
OMB No. 0704-0188

Public reporting burden for this collection of information is estimated to average 1 hour per response, including the time for reviewing instructions, searching existing data sources, gathering and maintaining the data needed, and completing and reviewing the collection of information. Send comments regarding this burden estimate or any other aspect of this collection of information, including suggestions for reducing this burden, to Washington Headquarters Services, Directorate for Information Operations and Reports, 1215 Jefferson Davis Highway, Suite 1204, Arlington, VA 22202-4302, and to the Office of Management and Budget, Paperwork Reduction Project (0704-0188), Washington, DC 20503.

1. AGENCY USE ONLY (*Leave blank*)

2. REPORT DATE
February 2004

3. REPORT TYPE AND DATES COVERED
Final Contractor Report

4. TITLE AND SUBTITLE
RQL Fuel Shifting Sector Rig Test

5. FUNDING NUMBERS
WBS–22–714–01–39
NAS3–27235

6. AUTHOR(S)
Daniel A. Haid, Frederick S. Koopman, William O.T. Peschke,
and Kenneth S. Siskind

7. PERFORMING ORGANIZATION NAME(S) AND ADDRESS(ES)
Pratt & Whitney
P.O. Box 109600
West Palm Beach, Florida 33410

8. PERFORMING ORGANIZATION REPORT NUMBER
E–14293

9. SPONSORING/MONITORING AGENCY NAME(S) AND ADDRESS(ES)
National Aeronautics and Space Administration
Washington, DC 20546–0001

10. SPONSORING/MONITORING AGENCY REPORT NUMBER
NASA CR—2004-212879
MTD211A9

11. SUPPLEMENTARY NOTES
Project Manager, James D. Holdeman, Turbomachinery and Propulsion Systems Division, NASA Glenn Research Center, organization code 5830, 216–433–5846.

12a. DISTRIBUTION/AVAILABILITY STATEMENT
Unclassified - Unlimited
Subject Category: 07 Distribution: Nonstandard
Available electronically at http://gltrs.grc.nasa.gov
This publication is available from the NASA Center for AeroSpace Information, 301–621–0390.

12b. DISTRIBUTION CODE

13. ABSTRACT ***(Maximum 200 words)***
The low emissions potential of a Rich-Quench-Lean (RQL) combustor for use in the High Speed Civil Transport (HSCT) application was evaluated as part of Work Breakdown Structure (WBS) 1.0.2.5 of the NASA Critical Propulsion Components (CPC) Program under Contract NAS3–27235. Combustion testing was conducted in cell 3 of the Jet Burner Test Stand at United Technologies Research Center. Specifically, Fuel Shifting as an approach to combustor control was evaluated in a multiple bank Rich-Quench-Lean combustor, utilizing reduced scale quench technology implemented in a convoluted liner with quench plate concept. The use of this control technique significantly reduces the risk associated with RQL combustors by eliminating the need for a variable geometry mechanism to control combustor airflow while still maintaining low emissions, good performance and operability throughout the operating envelope. Through the combustion tests conducted, information on emissions (NO_x, CO, UHC combustion efficiency) was obtained at various key operating conditions, including the airport vicinity conditions (5.8 percent thrust idle, 15 percent thrust descent, 34 percent thrust approach, 65 percent thrust climb) as well as subsonic cruise. Emissions behavior was assessed as a function of the degree of fuel shifting applied to the combustor to evaluate the overall emissions characteristics as well as radial profile characteristics associated with fuel shifting technology. Data acquired provided insight into the tradeoff that exists between emissions, performance, and the combustor exit profile.

14. SUBJECT TERMS
Combustor; Gas turbine; Rich burn; RQL

15. NUMBER OF PAGES
104

16. PRICE CODE

17. SECURITY CLASSIFICATION OF REPORT	18. SECURITY CLASSIFICATION OF THIS PAGE	19. SECURITY CLASSIFICATION OF ABSTRACT	20. LIMITATION OF ABSTRACT
Unclassified	Unclassified	Unclassified	