NASA/CR—2003-212523 Allison EDR 16083

Ultra High Bypass Ratio Low Noise Engine Study

W.N. Dalton III
Allison Gas Turbine Division, General Motors Corporation, Indianapolis, Indiana

November 2003

The NASA STI Program Office . . . in Profile

Since its founding, NASA has been dedicated to the advancement of aeronautics and space science. The NASA Scientific and Technical Information (STI) Program Office plays a key part in helping NASA maintain this important role.

The NASA STI Program Office is operated by Langley Research Center, the Lead Center for NASA's scientific and technical information. The NASA STI Program Office provides access to the NASA STI Database, the largest collection of aeronautical and space science STI in the world. The Program Office is also NASA's institutional mechanism for disseminating the results of its research and development activities. These results are published by NASA in the NASA STI Report Series, which includes the following report types:

- TECHNICAL PUBLICATION. Reports of completed research or a major significant phase of research that present the results of NASA programs and include extensive data or theoretical analysis. Includes compilations of significant scientific and technical data and information deemed to be of continuing reference value. NASA's counterpart of peer-reviewed formal professional papers but has less stringent limitations on manuscript length and extent of graphic presentations.

- TECHNICAL MEMORANDUM. Scientific and technical findings that are preliminary or of specialized interest, e.g., quick release reports, working papers, and bibliographies that contain minimal annotation. Does not contain extensive analysis.

- CONTRACTOR REPORT. Scientific and technical findings by NASA-sponsored contractors and grantees.

- CONFERENCE PUBLICATION. Collected papers from scientific and technical conferences, symposia, seminars, or other meetings sponsored or cosponsored by NASA.

- SPECIAL PUBLICATION. Scientific, technical, or historical information from NASA programs, projects, and missions, often concerned with subjects having substantial public interest.

- TECHNICAL TRANSLATION. English-language translations of foreign scientific and technical material pertinent to NASA's mission.

Specialized services that complement the STI Program Office's diverse offerings include creating custom thesauri, building customized databases, organizing and publishing research results . . . even providing videos.

For more information about the NASA STI Program Office, see the following:

- Access the NASA STI Program Home Page at ***http://www.sti.nasa.gov***

- E-mail your question via the Internet to help@sti.nasa.gov

- Fax your question to the NASA Access Help Desk at 301–621–0134

- Telephone the NASA Access Help Desk at 301–621–0390

- Write to:
  NASA Access Help Desk
  NASA Center for AeroSpace Information
  7121 Standard Drive
  Hanover, MD 21076

NASA/CR—2003-212523 Allison EDR 16083

Ultra High Bypass Ratio Low Noise Engine Study

W.N. Dalton III
Allison Gas Turbine Division, General Motors Corporation, Indianapolis, Indiana

Prepared under Contract NAS3–25950, Task Order 5

National Aeronautics and
Space Administration

Glenn Research Center

November 2003

Trade names or manufacturers' names are used in this report for identification only. This usage does not constitute an official endorsement, either expressed or implied, by the National Aeronautics and Space Administration.

Contents were reproduced from the best available copy as provided by the authors.

Note that at the time of research, the NASA Lewis Research Center was undergoing a name change to the NASA John H. Glenn Research Center at Lewis Field. Both names may appear in this report.

Available from

NASA Center for Aerospace Information
7121 Standard Drive
Hanover, MD 21076

National Technical Information Service
5285 Port Royal Road
Springfield, VA 22100

Available electronically at http://gltrs.grc.nasa.gov

Preface

This report was delivered to NASA as an informal document. There were three engine noise studies done by the Allison Engine Company (now Rolls Royce), General Electric Aircraft Engines and Pratt & Whitney in preparation for the Advanced Subsonic Technology (AST) Noise Reduction Program. The objectives of the studies were to identify engine noise reduction technologies to help prioritize the research that was subsequently done by the AST Program. The reports also summarize the predicted performance and economic impact of the noise reduction technologies.

The emphasis of commercial turbofan research during the early 1990's was on higher bypass ratio engines. While the technology insertion into service has been slower than expected, many of the results from these studies will remain valid for a long period of time and should not be forgotten by the aerospace community. In 2003, NASA decided to publish all three studies as Contractor Reports to provide references for future work. The quality of the reproduction of the original report may be poor in some sections.

Dennis L. Huff
Chief, Acoustics Branch
NASA Glenn Research Center

TABLE OF CONTENTS

Section	Title	Page
	Executive Summary	1
	Introduction	3
I	Baseline Engine Selection and Definition	4
II	Component Noise Studies	10
	2.1 Fan Noise	10
	2.2 Turbine Noise	17
	2.3 Duct Propagation Reduction	19
	2.4 Summary	24
	III Reduced Noise Engine Configuration	26
IV	Technology Assessment/Plan	29
V	Preliminary Design of Fan Rig	32

EXECUTIVE SUMMARY

Regional airlines represent an important market segment for commercial engine manufacturers. Current trends in this industry point toward the need for larger aircraft in the 90-120 passenger category. This market development is occurring at the same time as regulatory agencies are considering proposals for a more restrictive noise certification standard. The current consensus is that new standards would be 4-6 decibels below the current FAR 36 Stage 3 requirements. Under such a rule, engine/airframe combinations capable of 10 dB below the current limits would be required in order to provide growth potential. Under this contract, Allison Gas Turbine has sought to define an engine configuration in the 15,000 lb thrust class for use on a 100-passenger regional airline which could be certified at 10 dB below the current acoustic limits. This study has focused on ultra-high bypass ratio (UHBR) cycles due to the low exhaust jet velocities and reduced fan tip speeds. The baseline engine for this study employed a gear-driven, 1000 ft/sec tip speed fan and had a cruise BPR of 14:1.

Flyover time histories of perceived noise level (PNL) due to each of the major engine noise sources indicated that fan generated noise was dominant during both takeoff and approach operations. Turbine generated noise was predicted to be a significant secondary contributor to the approach levels. Component noise reduction studies were performed to identify cycle or physical configuration changes which resulted in a significant noise reduction. Based on these studies, a combination of bypass vane sweep and bypass duct wall acoustic treatment was selected as the most effective means to provide the required suppression of the fan noise field. Turbine noise reduction was based on the tone cutoff phenomenon. At cutoff, the sound field within a duct will decay in strength away from the source. Cutoff is effected by selecting the difference in numbers of rotating and stationary airfoils so as to exceed a critical number which varies with frequency. In order to meet this criteria while keeping the resulting airfoil numbers in each blade row within reason, it was necessary to reduce the number of low pressure turbine stages from 3 to 2 and increase the rotational speed. A revised engine configuration employing the modified fan and turbine had predicted far field noise levels which were 9.2 dB below current takeoff limits and 12.8 dB below current approach limits.

The economic impact of reducing engine acoustic emissions was assessed by comparing the direct operating costs (DOC) of the two UHBR engine configuration with those of a conventional direct drive, 6:1 bypass ratio turbofan when operating in a twin-engine, 100-passenger aircraft over a 550 nautical mile mission. Both the conventional and baseline UHBR engines meet current noise emission restrictions, but only the modified UHBR could comply with a 10 dB lower noise standard. The direct operating costs of the aircraft with conventional power plants are approximately 10.50 cents/seat-mile, which is about average for regional aircraft. The estimated operating costs for the two UHBR engine configurations are vir-

tually identical. Purchase costs and fuel burn are the dominant factors in the DOC. For the assumed fuel price of 75 cents/gallon, the lower purchase price of a conventional engine offsets the improved fuel burn of the higher bypass ratio engine. An increase in either mission length or fuel price would alter this conclusion, showing an advantage to increasing bypass ratio. Thus, the currently available data assigns no economic penalty for the revisions to current engine configurations required to meet the lower noise certification standards currently under considerations.

INTRODUCTION

Since the late 1960s, there has been a continuous effort to lower community noise levels resulting from aircraft terminal operations. By the end of the decade, all civilian aircraft in revenue service will be required to comply with Federal Aviation Regulation (FAR) Part 36, Stage 3/ICAO Annex 16 Chapter 3 noise restrictions. As part of the natural evolutionary process, consideration of a reduced Stage 4 noise certification level is underway. Current discussions are leaning toward a standard that would be four to six decibels (4-6 dB) below the Stage 3 requirements at all measuring stations. Several late model aircraft have registered levels during certification flights consistent with proposed Stage 4 limits. Thus, at first glance, reducing the certification standard would seem to pose minimal problems. However, current practice is to develop a family of aircraft capable of accommodating a range of passenger levels, beginning with the smallest aircraft and growing until noise limitations are encountered. To accommodate such a growth plan, the initial version of a Stage 4 aircraft would have to produce noise levels eight to ten decibels (8-10 dB) below the current Stage 3 limits. This will require a major reduction in propulsion system generated noise.

Allison Gas Turbine is focusing its commercial engine development efforts on the emerging regional airline market. This market has developed as the major trunk airlines have shifted their focus to high density, long haul routes in the wake of deregulation. This has left many moderate-sized cities with little scheduled airline service. Smaller regional carriers are filling this void, providing connections to major hubs and inter-city service. Many of these regional lines are currently employing turboprop-powered commuter aircraft or older first generation turbofan-powered aircraft. Marketing studies show a demand for a modern 90-130 passenger airplane to be used on routes of 500 nautical miles or less and capable of cruising at Mach 0.77 at altitudes around 37,000 ft. Preliminary design studies of such an aircraft have focused on a two-engine configuration, leading to a propulsion system requirement for approximately 15,000 lb of static thrust. The effort performed under this contract has been intended to define a propulsion system for such an aircraft that results in noise levels at the standard FAA certification measuring stations that are 10 dB below the current FAR 36 Stage 3 requirements. To reach this goal, Allison examined the following:

- the impact of overall cycle selection on far-field noise levels
- the impact of component variation within a fixed cycle on far-field noise levels
- requirements for specific, additional noise abatement devices employing both current and developing technology

In addition, the impact on direct operating cost in reaching a Stage 4 noise level was assessed.

I. BASELINE ENGINE SELECTION AND DEFINITION

In selecting a propulsion system for the regional airline mission, it is important to consider aircraft operator requirements. Based on its marketing activity, Allison has identified the following characteristics as essential to a successful propulsion system for the regional market:

- low maintenance
- high dispatch reliability
- low fuel consumption
- unrestricted access to major airports
- low engine generated cabin noise levels
- full on-board accessories

Four basic configurations of the gas turbine engine are available for commercial aircraft applications. The conventional turboprop can be quickly eliminated from consideration due to the desired flight speed. Similarly, fuel consumption and radiated noise eliminate the turbojet. Remaining are the unducted propfan and turbofan.

While the unducted propfan has demonstrated superior fuel economy to all other configurations at high subsonic flight speeds, extensive research suggests that reducing propfan acoustic emissions sufficiently to meet a noise standard of 10 dB below Stage 3 is not possible. This leaves only the turbofan for consideration. A very high bypass ratio, geared turbofan engine was selected as the baseline engine on which to conduct acoustic analyses. The engine was representative of that required for a 100-passenger regional airliner that would enter service in the year 2000. Allison recently participated in a propulsion system/airframe study with a major U.S. airframe company, wherein geared and direct drive fans were evaluated in engines that featured a wide range of bypass ratios up to values of BPR = 14:1. The results of the investigation that evaluated the impact of engine performance, weight, cowl drag, acquisition cost, and maintenance costs on cost of ownership, showed that for BPR $\geq$10 geared fan systems result in lower system ownership costs. Based on those findings, a geared fan drive system was selected for the NASA Very High Bypass Ratio Engine (VHBR).

The engine design was governed by Allison general design procedures and subjected to the following constraints:

- Thrust class typical of 100 passenger airliners, i.e., F_n (sls, ISA) = 15,000 lb
- Fan design based on wide chord, flutter free philosophy

- High pressure spool technology consistent with Allison HP compressor, combustor, and HP turbine advanced designs for year 2000 entry into service
- Turbine cooling flow levels consistent with Allison transpiration-cooled, long-life commercial engine blading life requirements
- Compressor and turbine discs sized to a very severe cyclic life limiting requirements
- Non Life Limiting Parts-coated airfoils to be removed and recoated after a large accumulation of service hours uncoated airfoils designed for a very large number of hours of service before replacement
- Fan drive gearing sized for worst case speed and torque requirements: gearing sized for a very large number of service hours before replacement
- Rotor inlet temperature limited to 2500°F
- Engine designed for ISA + 27°F take-off conditions

The engine design considered a wide range of representative flight conditions from hot day take-off and high altitude climb to high altitude cruise. Typically, maximum climb sets the engine flow size (fan diameter) while the take-off conditions set maximum rotor inlet temperature levels.

For a fixed level of rotor inlet temperature, a wide range parametric study of the impact of overall pressure ratio on engine specific fuel consumption was conducted at high altitude and flight Mach number conditions. The results showed that for the higher bypass ratios, the point of diminishing returns for increasing overall pressure ratio was reached around $R_{cOA} \simeq 35{:}1$. Establishing R_{cOA} at 35:1 enabled additional parametric studies to be carried out which defined the fan pressure ratio and, hence, engine bypass ratio. These studies involved iterating between altitude cruise and hot day take-off conditions to establish the optimum design that satisifed the imposed temperature and pressure limits and demonstrated maximum propulsive efficiency.

The resulting baseline engine design is characterized as a very high bypass ratio, geared fan, 15,000 lb thrust, turbofan with the following overall characteristics:

- Thrust (Takeoff, SLS, ISA) 15,000 lb
- Bypass Ratio (Cruise, 39,000 ft, 0.8M, ISA) 14:1
- Maximum RIT (Take-off, SLS, ISA + 50°F) 2500°F
- TSFC (Cruise, 39,000 ft, 0.8M, ISA) 0.5414 lb/hr-lb

Figure 1* presents a general arrangement drawing of the resulting NASA VHBR engine. Overall fan and fan hub section quarter stage design characteristics are listed in Table I. The fixed pitch fan was designed with low tip speed to (1) permit implementation of composite fan blade materials and (2) establish a low noise level for the baseline engine. By having a low noise level baseline engine, the attainment of the program goals of minus 10dB below current certification requirements will be more easily attained.

Table II lists characteristics of the high pressure compressor. The inlet guide vane (IGV) and first four stages feature variable geometry for operability and good performance. This compressor is an advanced design with the goal of attaining 25:1 Rc in 10 stages with excellent efficiency and 15% surge margin.

The combustor is a multi injection lean (MIL) combustor that will demonstrate very wide operating range and addresses anticipated reduced emission level requirements. The NOx emission should be reduced 65% below current level, while maintaining very low unburned hydrocarbons, carbon monoxide, and smoke levels. Features of the combustor are the following:

- active fuel control:
  - staging provides minimum emissions at all operating points
  - fuel pressure activated flow divider valves
  - 16 fuel nozzles/48 injection points
- multiswirler main/pilot modules
  - ensure uniform lean F/A mixture at critical flight conditions
  - reduced burner pattern factor
- advanced airblast fuel nozzles
  - unique 3-stage fuel delivery
  - enhanced fuel atomization
- composite wall construction
  - minimum cooling air requirements
  - reduced quenching lowers CO emission

Figure 2 illustrates key features of the MIL combustor system.

High and low pressure turbine aerodynamic and mechanical design parameter values are listed in Tables III and IV. The two-stage, high-pressure turbine has all four airfoil rows cooled. Only the first-stage vane

*All tables and figures appear at the end of this report.

of the low pressure turbine requires cooling air. The individual stages feature advanced wheel and blade structural design along with electronically controlled active blade tip-casing clearance control.

Table V presents a comparison of a 6:1 and a 14:1 bypass ratio turbofan in terms of weight, specific fuel consumption, and acoustic levels for the three FAR Part 36 measuring stations. These two engines employed a common core and are based on current technology component performance and material systems. The acoustic levels were predicted using the NASA-generated Aircraft Noise Prediction Program (ANOPP). These predictions assume two engines, no thrust cutback during takeoff, no acoustic attenuation devices, and performance at identical thrust and aircraft performance conditions. A description of the aircraft flight path, performance, and engine thrust employed in the acoustic predictions is given in Table VI. Clearly, the higher bypass ratio engine is substantially quieter and more fuel efficient than the conventional engine at a given thrust. In fact, the UHBR configuration was able to comply with all the current Stage 3 limits without requiring fan duct treatment or other noise abatement procedures commonly used on current aircraft. This UHBR will form the baseline configuration for the rest of the study reported here.

The overall goal of this study is to define an engine configuration whose predicted acoustic levels at the three FAR 36 measuring stations are at least 10 dB below the current Stage 3 requirements. The baseline UHBR engine will require a reduction of 7.3 EPNdB at the takeoff flyover station, 7.7 EPNdB at the sideline station, and 2.9 EPNdB at the approach station to meet the contract goal. In considering how such reductions might be achieved, it is first necessary to identify the strengths of the various noise sources within the engine. Four primary noise sources have been identified in turbofan engines: the fan, turbine, combustor, and jet mixing. The relative strengths of these sources will be determined by examining their contributions to the takeoff and approach flyover perceived noise level (PNL) time history. As shown in Figure 3, the peak PNL arrives at the observer station for both takeoff and approach after the aircraft passes overhead.

Projecting into the aircraft reference frame, the peak PNL levels are associated with a polar directivity angle of 114 deg for takeoff and 112 deg for approach. Anticipating somewhat, it can be expected that sources whose peak radiation is aft will be dominant. In Figures 4 and 5, the respective contribution of each of the four sources to the PNL time history during takeoff and approach is presented. These results show the fan to be the principal source of noise during both the takeoff and approach flyover. Secondary contributions are made by jet mixing during takeoff and turbine noise during approach.

PNL is a frequency weighted overall metric based on an annoyance scale, i.e., two acoustic fields with equal PNL should be equally annoying to an observer, even though their spectral content is quite differ-

ent. Figure 6 shows the sound pressure level (SPL) spectrum at the takeoff flyover monitor associated with the peak PNL and the associated component near-field spectra. Several observations can be made from this figure. First, the two spikes in the one-third octave band spectrum at 630 and 1200 Hz are associated with the fan and correspond to the fundamental and second harmonic of the blade passing tone resulting from rotor-stator interaction. Second, the majority of the noise spectrum below the 630 Hz one-third octave band is the result of jet mixing. Finally, very little noise arrives at the observer location in the frequency bands above 3.1 kHz. This is a result of atmospheric absorption that can occur due to the long propagation distances which result from the rapid aircraft climbout.

Figure 7 presents similar SPL spectrum for landing approach. Again, the fan tones appear as clearly definable spikes in both the near- and far-field spectra. Since the effective perceived noise level metric (EPNL) penalizes discrete tones that can be identified within an otherwise continuous spectrum, it is anticipated that suppression of the fan tones will be a priority of this study. As opposed to the takeoff results of Figure 6, the spectrum during approach has a significant contribution from the higher frequency bands. This is a natural result of the altitude restriction of 394 ft that must be observed as the approach monitor is overflown. This results in much shorter propagation distances over which atmospheric absorption can occur than in the takeoff measurements where altitude is limited only by aircraft performance.

While the previous results provide insight into which of the various noise sources will require reduction to meet the program acoustic goals, the sensitivity of the far-field levels to reductions in component noise strength remains to be determined. The EPNL is a complex relationship between overall sound pressure levels (OASPL), spectrum, and exposure time. This complex interrelationship makes determination of a true sensitivity coefficient a formidable task. However, a great deal of the desired information can be approximated fairly quickly using the suppression table features of ANOPP. By applying a fixed suppression factor to all frequencies and directivity angles of a particular source, while allowing the other sources to remain unchanged and thereby establish a noise floor, it is possible to estimate the sensitivity of the EPNL to changes in strength of the various noise sources. This information more clearly establishes which sources must be reduced to establish a rough attenuation goal for the affected components. The results of such an exercise are shown in Figure 8 for takeoff and Figure 9 for approach. These figures clearly indicate that the engine radiated noise field is dominated by the fan. As a result, attempts to reduce far-field noise levels must focus on the fan. Similarly, these figures show that reducing jet and combustion noise has almost no impact on far-field total levels. Therefore, no emphasis will be placed on identifying methods for reducing these sources during the rest of this study. As shown in Figure 9, far-field noise levels during approach are sensitive to reductions in the turbine generated noise. Consequently, it can be expected that the most efficient path to reaching the contract goals for approach

noise levels will include a combination of fan and turbine noise reduction. Based on the results of Figures 8 and 9, approximate noise reduction goals are 15 dB for the fan at takeoff thrust, 10 dB for the fan at approach thrust, and 10 dB for the turbine at approach thrust.

II. COMPONENT NOISE STUDIES

2.1 FAN NOISE

The results of Section I clearly establish that a substantial reduction in fan-generated noise will be required to meet the contract goal. Two general approaches are available for accomplishing this task:

- modification of fan cycle parameters/mechanical configuration to reduce the strength of the noise source
- reduction of the radiated noise field through modification of the inlet and bypass duct acoustic transmission properties

In developing a rational strategy for reducing far-field fan noise levels, it is necessary to consider certain aspects of the radiation directivity and spectrum peculiar to a fan. Since both the inlet and discharge of the fan are open to the free field, two distinct acoustic radiation paths are available. Depending on the fan design parameters and ducting geometry, it can often be determined that a primary radiation path exists. The flyover PNL time history of Figure 3 both show peaks after the aircraft has passed overhead. This suggests that radiation from the fan bypass duct is dominant. However, the presence of significant secondary sources at both takeoff and approach introduces an element of uncertainty into this conclusion. Figure 10 presents the PNL time history for the fan alone during takeoff and approach. Clearly, the peak fan noise levels are the result of radiation from the bypass duct. This conclusion will be of particular importance in the design of any duct treatment that might be used.

The frequency spectrum generated by the fan is composed of two distinct components, discrete frequency tones, and a wide spectrum broad band. Tonal noise has two physical origins. Supersonic operation produces tones at multiples of the shaft rotational speed. These tones are produced by the leading edge oblique shock field of the fan rotor. As a result of small variations in leading edge thicknesses and angles, the shock wave angles vary. This produces a variable spacing between the wave fronts that increases with distance from the fan front. As a result, the basic period becomes once per revolution with harmonics occurring depending on the exact shock structure. Such noise, commonly referred to as combination or multiple pure tone noise, is not a consideration in this study since the fan tip speed is subsonic. A second source of discrete tone noise is the unsteady aerodynamic interaction of the rotor and stator. For commercial turbofans, the primary driver of this interaction is the rotating wakes of the rotor washing over the stationary vane row. Rotor-stator interaction will be observed at the rotor passing frequency and its harmonics. Broadband noise is the result of turbulent flows within the engine. Interaction of the turbulence with airfoil rows can produce significant amplification of the broadband signature. In conven-

tional bypass ratio turbofans, the fan spectrum is typically dominated by the tonal components. Referring to Figure 11, it can be seen that the PNL time history is composed of nearly equal tones and broad band components. Since the EPNL noise metric employed for certification is an integration of the PNL history, reduction of both tone and broadband fan noise will be required to meet the program goals. This result may seem somewhat surprising since the fan tones are easily distinguished in the sound pressure level spectra of Figures 6 and 7. However, the extremely slow rotational speed of the geared fan drive and the low airfoil count of the wide chord rotor blade result in an extremely low fundamental blade passing frequency. As a result, only a very small tone correction is applied to the PNL during the calculation of EPNL. The emergence of broadband noise as a significant contributor to the overall fan spectrum is a major departure from conventional turbofan experience, unique to the ultra high bypass ratio (UHBR) concept.

Having fully characterized the fan noise field, methods for reducing the far-field levels must now be examined. This section of the report will focus on concepts that affect the actual source strength. Methods for modifying the transmission characteristics of the ducting will be examined in a separate section. The strength of the baseline configuration was determined using the ANOPP fan noise module, based on the empirical correlation of Heidemann (Ref 1). Some of the more fundamental noise reduction concepts to be reported, such as rotor-stator spacing, could be directly assessed from this model. For the more advanced methods, suppression tables that were a function of polar angle and one-third octave band were developed using supplemental analysis or data available within the general literature or at Allison.

Efforts to reduce fan noise emissions initially focused on fairly simple concepts. Since much of the noise generated by the fan is the result of interactions between the nonuniform nonstationary velocity field generated by the rotor and the downstream stator, increasing the distance between the rotor exit and stator outlet can be an effective method for reducing noise generation by allowing viscous diffusion and turbulent transport to smooth these profiles before they encounter the stator. This benefit is realized both in the tone and broadband components of the fan noise field. For the baseline configuration, the spacing between the rotor and stator was 1.29 times the mean rotor chord. Referring to Figure 12, both the takeoff and approach EPNL are reduced 1.3 dB by increasing the spacing to twice the mean rotor chord. A further increase to three rotor chords produces an additional reduction of 1 dB in the takeoff EPNL and 0.7 dB in the approach EPNL. The second increment in spacing was less effective at reducing approach noise than takeoff noise. This is the result of the relatively strong contribution from the secondary turbine source to the approach levels. While jet mixing does contribute to the takeoff levels, its contribution to the fan is much weaker than the turbine participation in approach.

While fan rotor to stator spacing is predicted to have a strong impact on flyover noise levels, practical limitations on available space exist. For the baseline engine configuration, increasing the spacing parameter beyond two rotor chords would require increasing the cowl length to accommodate the thrust reverser. Due to the large diameter of the fan, increasing cowl length will rapidly increase nacelle wetted area and therefore drag. It is also important when considering large spacing parameters to remember that the predictive method employed is empirical. The description in Ref 1 does not detail the upper limiting values of parameters included in the correlation. Data available from subscale fan testing at Allison would indicate that spacing levels exceeding two rotor chords do not produce appreciable change in fan noise level.

The data correlation of Ref 1 indicates a relationship between fan design tip Mach number and the resulting acoustic power. This relationship is particularly strong for supersonic tip speeds, where fairly small changes in tip speed can produce striking changes in the overall sound power arriving in the far-field. For the design tip speed of the fan rotor of this study, decreasing tip speed will result in decreasing acoustic levels. Referring to Ref 1 again, lowering the design Mach number will result in a decrease in both tone and broadband components at takeoff conditions. However, the data in Ref 1 indicates that for tip relative Mach numbers less than 0.7, fan acoustic levels assume an asymptotic value, and further decreases in speed provide no additional acoustic benefit. As shown in Figure 13, reducing the fan design tip speed from 1000 to 900 ft/sec reduces the takeoff EPNL by 0.8 dB. Further reductions do not result in any further acoustic reductions. The approach EPNL showed no sensitivity to tip speed changes, indicating the baseline design fan speed at approach power lies in the asymptotic interval mentioned above.

The two concepts discussed to this stage represent an attempt to minimize the unsteady aerodynamic excitation of the adjacent rotor-stator pair, thus reducing the near-field strength of the resulting acoustic field. Tyler and Sofrin (Ref 2) reported that, for a fixed rotor and stator geometry, there exists a critical or cutoff frequency below which the strength of a particular harmonic tone in the far field suddenly decreased. The exact value of the cutoff frequency could be changed by varying the number of rotor blades, the number of stator vanes, the duct geometry, and the throughflow Mach number. This behavior represents the fundamental difference in the acoustic problem between propellers and turbomachinery. The difference in the number of blades and vanes establishes a time lag between events on adjacent airfoils. Any pressure pattern that exists in the duct must have a circumferential phase speed and wave number that are consistent with this imposed phase relation. The presence of the outer and inner walls of the flow path imposes a radial wave number constraint as a result of the nonpenetration wall requirement. For the simplifying assumption of no flow, the critical or cutoff frequency occurs when the sum of the squares of the radial and circumferential wave numbers equal the free space wave number (ω/c). At the cutoff,

acoustic disturbances generated at a plane will decay axially. When mean flow exists, the form of the cutoff criteria becomes more complicated, but the result is the same.

For subsonic tip speed fans, all the energy generated by the rotor-stator interaction at a particular harmonic of blade passing frequency can be made to decay by forcing the fundamental circumferential wave number to be larger than the critical level. Current generation turbofans employ blade-vane combinations which result in cutoff of the fundamental harmonic of the blade passing frequency. The baseline UHBR also satisfies the cutoff criteria for fundamental blade passing frequency. The high aspect ratio, narrow chord fan rotor designs currently in use require a relatively large number of airfoils to meet aerodynamic constraints. As a result, the bypass vane count cannot be increased sufficiently to meet the cutoff criteria for higher frequency harmonics of the blade passing tone. However, the low aspect ratio, wide chord fan rotor used in the baseline UHBR engine results in a design with only 19 airfoils. Therefore, increasing the bypass vane airfoil count to produce cutoff of the second harmonic of blade passing frequency becomes feasible. The approximate cutoff criteria of Goldstein (Ref 2) indicate that increasing the number of bypass vanes from the baseline number of 43 to 86 will be sufficient. Since for a fixed in-flow condition vane solidity must be maintained within a fairly narrow band to assure acceptable performance, increasing the number of airfoils in a row requires a reduction in the airfoil chord. Current Allison aeroelastic criteria will not allow a further increase in vane count to produce cutoff of the third harmonic of blade passing frequency due to the resulting small chord and thickness. Thus, we will examine the impact of cutoff of the second harmonic on EPNL.

While determining the number of vanes required to achieve cutoff of higher harmonic frequencies of rotor-stator interaction is straight forward, determining the resulting reduction in the fan noise field is not. No first principles computational procedure has yet demonstrated the ability to accurately predict the noise levels associated with the rotor-stator interaction problem. The empirical method of Heidemann arrives at a reduction of 8 dB in the sound pressure level of the fundamental frequency component at cutoff. No such data is available for higher harmonics. It would seem logical to assume an identical reduction in second harmonic SPL at cutoff. However, there is some concern that this reduction is independent of the actual value of the cutoff ratio. Theoretical solutions to the wave equation relevant to a convecting media in a cylindrical annulus show a direct dependence between the axial wave number describing the decay of acoustic energy at a particular frequency and the cutoff ratio. Since the chosen vane number of 86 produces cutoff ratios significantly less than one, a blanket application of the Heidemann empirical criteria may be conservative. To determine the sensitivity of the EPNL to the assumed decay, a simple comparison test was conducted. Assuming a reduction of 8 dB of both the fundamental and second harmonic of blade passing frequency, a reduction in takeoff EPNL of 1 dB in the baseline engine is produced. Increasing the assumed reduction to 40 dB for the fundamental tone and 30 dB for the second

harmonic reduces the takeoff EPNL by 1.4 dB below the baseline engine configuration. Thus, the predicted EPNL is not tremendously sensitive to the assumed decay characteristics associated with cutoff. This insensitivity is certainly related to the strong broadband component of the fan noise field. For the purposes of this study, we will accept that increasing the bypass vane number sufficiently to ensure cutoff of both the fundamental and second harmonic blade passing tones reduces the strengths of these two tones by 8 dB. This produces a reduction in takeoff EPNL of 1 dB and approach EPNL of 0.7 dB.

We have shown that varying the number of vane airfoils results in circumferential wave numbers for specific discrete tones that do not propagate acoustic energy to the far-field. As a result of the slow rotational speed of the geared fan design, many harmonics of the blade passing frequency lie in the audible frequency range, and these higher harmonics contain significant acoustic energy. It is not practical to increase the airfoil count sufficiently to ensure that even three of the blade passing tones are cutoff. However, a second degree of freedom exists, the radial wave number, which can be manipulated to lower far-field acoustic transmission. This was alluded to previously, when it was mentioned that in a duct with no flow the sum of the squares of the wave numbers in the three orthogonal directions must equal the free space wave number. In the previous section, the vane count was varied to produce a circumferential wave number that was larger than the free space solution, resulting in a complex axial wave number that produces decay of the acoustic field away from the source. For frequencies at which it is impractical to provide sufficient vanes to effect cutoff solely through the circumferential wave number, increasing the radial wave number can produce similar results. This is not quite as straightforward a process as has been implied up to this point. The acoustic field within an open duct is potentially composed of a doubly infinite set of spatial pressure patterns, each corresponding to a particular combination of wave numbers. Since no true boundaries exist in the circumferential direction, the spatial pattern in this direction is composed of a series of spinning sine waves whose wave number must satisfy the previously described phase lag established by the difference in the number of blades and vanes. The cutoff condition described in References 2 and 3 and invoked in the previous section ensures that the lowest circumferential wave number is above cutoff at a particular frequency. As a result, all possible wave patterns produced by rotor-stator interaction will be cutoff. The presence of the bounding flow path walls produces a true boundary condition in the radial direction. The possible radial pressure distributions are constrained by this boundary condition. The wave number of the radial pattern can be changed by changing the dimensions of the flow path or by introducing an acoustically compliant layer on the walls. Delaying any consideration of treated walls for the moment, it is not possible to restrict the radial wave number to values large enough to preclude all propagation since zero radial wave number (radially constant pattern) is compatible with any geometry. It is, however, relatively easy to minimize the number of radial modes that will propagate by again setting the difference in the number of rotor blades and stator vanes sufficiently high.

To make practical use of the cutoff of high wave number radial modes, it is necessary to modify the duct acoustic field generated by a source to accentuate the concentration of the initial spatial distribution of energy in these modes. For fan tonal noise resulting from rotor-stator interactions, radial sweepback and circumferential tilt have been proposed as potential methods for redistributing the energy. When a vane is either swept or tilted, a time lag is introduced between radial sections of the wave since the time at which each section encounters the rotor wake shifts. This produces a similar radial phase lag in the resulting unsteady lift generated by each section, making each vane a noncompact acoustic source. This noncompactiveness accentuates the production of spatial pressure patterns which decay. Since the rotor wake is itself a nonradial surface, the optimum sweep angle becomes a function of the rotor wake geometry.

To quantify the effects of blade sweep on fan tone noise, the theoretical development of Envia (Ref 4) was applied. This method constructs the duct acoustic pressure distribution generated by an annular cascade of vanes exposed to an incoming velocity deficit through an appropriate superposition of the pressure fields generated by finite length, isolated wings exposed to the same transverse velocity deficit. This procedure generates an approximate solution since the additional response generated on a reference airfoil by the fields of the adjacent airfoils is neglected. The error resulting from this approximation cannot currently be quantified but would be of maximum concern near the circumferential cutoff frequency.

The initial step in selecting a swept vane configuration for the UHBR engine was to determine the level of fan tone reduction required. As has been previously seen, large reductions in tone strength do not necessarily produce correspondingly large reductions in EPNL. This is because a noise floor is formed by the fan broadband, jet, and turbine noise fields.

For the low tip speed, low pressure ratio fan employed in an ultra-high bypass configuration, reducing the tone levels associated with the second through twelfth harmonics of blade passing frequency 8 dB each reduced the full power takeoff flyover EPNL 1.6 dB. Doubling the tone suppression to 16 dB produced a further EPNL reduction of 0.2 dB. No reduction in the fundamental tone strength was included, since the vane/blade ratio has been set to achieve cutoff of all radial modes associated with the circumferential order produced by rotor-stator interaction at this frequency. Based on this study, reducing the strength of the second through twelfth harmonics of blade passing frequency by 10 dB will produce the great majority of the benefit that can be gained from sweeping the vane. It is not necessary to consider the contributions from harmonics higher than twelve since they lie above the 10 kHz upper frequency limit used to calculate EPNL. Assuming a 10 dB reduction in these harmonics reduces the takeoff EPNL from 86.3 to 84.7 and approach EPNL from 91.2 to 89.5.

The theoretical development of Envia (Ref 4) indicates that increasing harmonics exhibit increasing attenuation for a fixed value of vane sweep. Thus, it is only necessary to determine the amount of sweep required to produce a 10 dB reduction in the strength of the second harmonic, since higher harmonics will automatically be reduced more. The Figures 4.7 to 4.11 of Ref 4 were used to determine the required vane sweep. The optimum sweep is a function of rotor wake spatial orientation, specifically its angular lean from a radial line. If the wake is assumed to behave like a simple convected shear layer, this lean parameter is approximated by the change in rotor relative exit air angle between hub and tip. For the full power takeoff thrust, the wake lean parameter, Γ, is equal to 45 deg. To employ Ref 4, it was necessary to use certain additional assumptions. The results presented in the referenced figures are for a 22-bladed rotor and 14-bladed stator. Based on cutoff ratio, the fundamental harmonic results of Ref 4 most closely match the second harmonic of Allison's UHBR fan. Thus, trends for the fundamental blade passing frequency in Ref 4 are used to establish the sweep required to reduce the second harmonic of the current fan blade passing tone 10 dB. In addition, no results are presented for wake leans in excess of 30 deg. Therefore the presented results for $\Gamma = 30$ deg are used directly. Based on these assumptions, a radial sweep of the bypass vane of approximately 40 deg is required. Due to the fairly serious level of approximation employed in arriving at this result, the actual sweep angle must be considered to be only a crude estimate. However, these results do indicate that a fairly significant decrease in EPNL can be achieved with vane sweep, and that the required sweep angles are possible.

The final concept studied for reducing fan noise was a two-stage, counter-rotating fan. By introducing counter-rotation, a substantial reduction in tip speed and pressure rise of each stage would be possible relative to the single-stage baseline. In the counter-rotating configuration, the partial length low pressure compressor stage shown in Figure 1 was replaced by a full-length, second-stage fan rotor. The logic employed was that the sum of two, weaker noise sources would be less than a single, stronger source.

It was again necessary to develop an approximate analysis method for determining the resultant far-field noise levels. In developing this method, it was assumed that sufficient axial spacing could be provided between the two rotors to ensure that the upstream rotor did not generate noise as a result of the nonuniform pressure field produced at the second rotor inlet. This allowed the counter-rotating fan configuration to be approximated as a single-stage, conventional fan with inlet guide vanes. The equivalent single-stage fan would turn at a wheel speed equal to the sum of the two counter-rotating fans. Since both rotors remain subsonic, no combination tones were included. For an initial configuration employing 23 upstream and 24 downstream blades, the takeoff flyover level increased to 91.7 EPNdB. As an approximate check on the accuracy of these predictions, a separate prediction was made for an unducted, counter-rotating propfan operating at the same tip speed and thrust level. This was based on an Allison empirical predictive method derived from our propfan demonstrator program. For the

unducted configuration, the takeoff EPNL is predicted to be 93.4 dB for a two-engine installation. This level is very similar to the ducted configuration, establishing a level of confidence in the fan predictions. Further optimization of the counter-rotation concept promised no improvement over the baseline; however, a significant weight penalty would be incurred due to the two stages of gearing required for counter-rotation.

2.2 TURBINE NOISE

The baseline engine studies of Section I established the need to reduce noise emissions from the low pressure turbine to meet the contract goals for landing approach. The earlier section established a 10 dB reduction in peak turbine SPL as a preliminary goal. As in the effort to reduce fan noise, two general approaches exist for reducing turbine noise, reduction of the noise source strength or modification of the flow path acoustic transmission properties. Before selecting a particular approach, it is helpful to consider some of the characteristics of the turbine generated noise field.

The frequency spectrum of turbine noise generally exhibits a peak at the blade passing frequency of each of the low pressure turbine stages. On either side of these peaks, the spectral levels fall off fairly gradually in a pattern resembling a haystack. In Ref 5, Matthews, et. al, (Ref 5) reference a series of Pratt & Whitney Aircraft (P&WA) test programs that demonstrated that the haystack spectrum is the result of diffraction of a discrete tone as it propagates through the density gradients in the exhaust jet shear layer. This discrete tone is the result of the rotor-stator interaction phenomenon discussed previously. As a result of the large numbers of blades generally found in turbine stages, the fundamental blade passing tone occurs at fairly high frequency. Harmonics of the fundamental tone lie above the audible range and are therefore of no consequence.

In attempting to lower the radiated turbine noise field, primary attention will be given to reducing the strength of the rotor-stator interaction tone. While methods developed for reducing fan duct transmission characteristics are applicable to turbine noise reduction, the high temperature, corrosive environment in which turbines operate make such an approach less attractive. In addition, the high frequencies involved in turbines require long, treated lengths to provide effective noise abatement. This would lead to substantial engine length and weight penalties. Such an approach represents a last resort to controlling turbine noise.

The baseline configuration turbine noise was determined using the ANOPP turbine noise module based on the General Electric empirical correlation of Kazan and Matha (Ref 6). A second empirical method due to Kresja and Valerino (Ref 7) was employed to determine the impact of rotor-stator spacing on peak

sound pressure level. As in the fan study, suppression tables as a function of angle and frequency were developed using supplemental analysis for concepts that could not be directly addressed in ANOPP.

Results presented in the fan noise section showed a fairly significant noise reduction with increasing rotor to stator spacing. The results in Figure 14 show that increasing turbine spacing from 50% of the upstream rotor chord to twice the chord produced a reduction in OASPL at the peak directivity angle of approximately 2 dB. This is well short of the 10 dB goal and was achieved at the cost of increasing low pressure (LP) turbine length by 250%. Turbine noise appears much less sensitive to stator/rotor spacing than fans. This is most likely related to the accelerating flow present in a turbine as opposed to compressor stages. This will result in a lower overall velocity deficit in the wake of turbine and a smaller gradient across the wake. As a result, the rate of decay of the wake deficit will be slowed. Due to the low sensitivity of the turbine tone to spacing, this would not seem to be a promising approach.

As a result of the frequency response of the average human ear, noise at frequencies above the upper bound of the 10 kHz one-third octave band is inaudible. Therefore, the EPNL calculation process filters out noise above 11.2 kHz. In addition, acoustic emissions at frequencies above 7 kHz are rapidly attenuated in air as a result of real gas effects. As a result, increasing the already high turbine tonal frequencies can result in a reduced approach EPNL. For this design, it was possible to increase the gear ratio from the original 3.1 to 3.68 without severely impacting low cycle fatigue life of the low pressure turbine (LPT) components. At the increased speed, the blade passing tone of the last stage turbine increases from 5250 Hz to 7610 Hz. The resulting approach EPNL is 90.1 dB, a decrease of 1.1 dB.

During the fan noise study, it was demonstrated that selecting the number of blades and vanes to satisfy the cutoff criteria of Goldstein (Ref 3) produced a substantial reduction in peak tone SPL and EPNL. The overall reduction realized in the fan was limited by the fan broadband that formed a noise floor. Since turbine noise is almost exclusively composed of discrete tones in the near field and since only the fundamental tone lies within the audible frequency range, application of this approach to the turbine promises to be most effective. The data of Bilwakesh et. al., (Ref 8) shows that tones associated with all stages of the low pressure turbine are present in the far field at nearly equal levels. Therefore, it is necessary for all stages in the LP turbine to satisfy the cut off criteria. For the three-stage LP turbine employed in the baseline UHBR engine, the blade passing tones of all three rotors lie in the 4 kHz 1/3 octave band at approach, and therefore contribute to the EPNL. Due to geometric increase in airfoil count as one sequentially tries to satisfy the cutoff condition for all three stages, it was quickly found to be impractical to use cutoff to reduce the turbine noise.

Since the cutoff criteria, when applied to multiple stages, produce a geometric growth in airfoil count with stage number, reducing the number of stages in the low pressure turbine would allow airfoil numbers to be controlled while still reducing acoustic emissions. Aerodynamic considerations precluded a single-stage design; however, a two-stage LPT proved feasible. The airfoil numbers in each of the vane and blade rows were selected to satisfy the simplified 2-D cut off criteria of Goldstein for the passing tone at the approach conditions. These numbers were then checked to see if any of the resulting blade passing frequencies lay above the top of the 10 kHz third octave band. The final airfoil count was then selected based either on the cut off criteria or a 11,200 Hz upper limit for the blade passing tone, whichever was less.

Table VII compares the original three-stage LP turbine and the two-stage design. Employing a reduction in the blade passing tone of 8 dB for cutoff, the approach EPNL for a two-stage low pressure turbine design and no treatment of fan noise is 88.9 dB. This meets the contract goal; it can be further reduced by accounting for fan improvements previously identified.

This acoustic improvement was not obtained without cost. The two-stage configuration requires a long transition duct between the high pressure turbine exit and low pressure turbine inlet to accommodate required diameter changes, producing an increased total pressure loss. In addition, since the turbine work extraction requirements remain unchanged, stage expansion ratios must increase producing high blade and vane exit Mach numbers. The net result is a loss of 2 percentage points in design LP turbine efficiency, which will definitely affect mission fuel burn.

2.3 DUCT PROPAGATION REDUCTION

The modifications described for the turbine produce predicted approach EPNL levels that meet the 10 dB margin on the contract goal of FAR 36. However, none of the fan noise reduction schemes examined were sufficiently effective to reduce takeoff flyover or sideline levels to the goal. Several effective methods for lowering tonal noise were identified. However, the broadband spectrum was unaffected by the tone suppression schemes and quickly became a controlling factor in the takeoff EPNL calculation. Little systematic investigation of the causes or suppression of fan broadband noise has been done; therefore, no methods for reducing the strength of the broadband source were defined. A method for suppressing broadband that does not require a strong physical description of its generation processes is required.

As previously mentioned, a second general approach to reducing the far-field noise is through modification of engine ducting acoustic transmission properties. This ducting forms a wave guide whose acoustic transmission properties are a complex function of the noise field spectrum, duct geometry, wall

impedance, and the flow field present. The EPNL resulting from an engine flyover can be altered by changing either the strength or the directivity of the radiated noise field. This study will focus on reducing the strength of the radiated fan broadband noise.

Tests conducted by Boeing and Allison during the 1970s indicated that choked inlet flow could reduce forwarded radiated noise peaks by as much as 40 PNdB for fans with supersonic tip speeds. This method is equally effective on tonal or broadband spectra. For the baseline UHBR engine, the peak takeoff PNL is not associated with forward propagating noise. However, forward radiating fan noise does contribute to that portion of the time history lying between the peak and the initial 10 dB down point. Thus, reducing the forward radiated noise will reduce the EPNL by lowering the duration correction.

Several constraints must be considered in the design of a choked inlet system. Since the inlet will meter flow into the compression system during choked operation, careful matching of the fan and inlet mass flow characteristics is required. This matching can only be accomplished at a discrete number of conditions for fixed inlet throat area. This restriction immediately leads to a variable geometry inlet. Since supersonic throughflow within the engine is generally undesirable, a diffusing section is required. This diffuser must exhibit good total pressure recovery to preserve engine performance. In addition, the variable area scheme must minimize the creation of total pressure distortion so as not to degrade compressor stability.

Two basic concepts have previously been demonstrated for achieving throat variable area. The least complicated of the two is the variable angle inlet guide vane. This concept is lightweight, mechanically simple, and produces low distortion levels. However, poor pressure recovery is a problem when throat Mach numbers exceed 0.7. There is also the potential for increased noise radiation from the bypass duct due to IGV-rotor interaction. The second concept involves a variable geometry cowling. This configuration preserves axisymmetric flow into the fan, at the expense of a potentially complicated mechanical arrangement. Since this arrangement requires a diffusing section downstream of the throat, a minimum length exists for each design throat Mach number below which massive flow separation from the walls will occur. Based on the Boeing measurements, variable area inlets with length to diameter ratios between 1 and 1.3 are near the minimum for acceptable aerodynamic performance. Acoustic performance of such inlets is a strong function of throat Mach number, with the maximum attenuation occurring at the choke point. However, in the variable cowl concept, fan face average total pressure loss and radial distortion index increase rapidly as the throat Mach number increases due to the increased diffusion that must occur downstream of the throat. Based on the Boeing studies, maximum throat Mach numbers between 0.8 and 0.85 produce a reasonable compromise between acoustic and aerodynamic performance. The two concepts are equally effective acoustically.

Both Boeing and Allison data show that appreciable acoustic suppression occurs even at throat Mach numbers substantially less than one. To design such a system, it is then necessary to pick the throat Mach number as a compromise between aerodynamic and acoustic performance. The Boeing and Allison data base correlate SPL reduction to throat Mach numbers. To determine the optimum throat Mach number, ANOPP was used to determine EPNL reduction as a function of the reduction in forward radiated fan noise. It was determined that reducing the fan forward radiated sound pressure level by 10 dB resulted in a reduction of the takeoff EPNL of 0.5 dB. Further reduction of the SPL had no additional impact on EPNL. Throat Mach numbers in the 0.75 range will produce a 10 dB SPL reduction. However, the relative insensitivity of the EPNL to reductions in fan inlet noise when compared to the complexity and weight of the variable area mechanism makes the choked inlet an unacceptable approach.

Noise abatement liners for inlet and bypass ducts that employ a perforated plate bonded to a honeycomb backing have become a standard feature in current turbofan engines. Their operation is analogous to a combination of a mass absorber and a viscous damper in a vibrating mechanical system. Energy is dissipated through viscous losses resulting from pumping action across the perforated plate due to the incident acoustic field. Energy is reflected and trapped as a result of the acoustic response of the trapped volume. While the basic configuration has a relatively narrow effective bandwidth, this can be improved by bonding a porous material, like common screen, wire to the perforated plate.

The characteristic parameter defining the acoustic properties of the treatment is the specific acoustic impedance. The impedance is generally presented as a complex number. The real part, or resistance, is a measure of the dissipative losses. The imaginary part, or reactance, represents a wall phase shift and therefore determines the reflection coefficient. Impedance of a specific construction changes with frequency, incident SPL, and the Mach number of the adjacent flow. In addition, the sound attenuation that occurs at a specified impedance changes with frequency, through flow velocity, and energy distribution across the duct cross-section. The design process involves determining an impedance that matches the SPL spectrum to achieve the desired attenuation. This requires an iterative approach.

The required spectral attenuation is based on the reduction in the peak PNL required to meet the EPNL goal. Since PNL is an overall noise metric based on an annoyance weighting of the sound pressure spectrum, it is not unique. That is, more than one spectrum exists with a fixed PNL. Since an initial SPL spectral goal consistent with the design PNL must be established to allow the iteration sequence to begin, we chose a goal spectrum with a constant annoyance as proposed by Minner and Rice (Ref 11). While this selection significantly simplifies the determination of the goal SPL spectrum, the resulting liner may not be optimum in terms of weight or overall length. The method of Minner and Rice was used to relate the required reduction in SPL spectrum to the liner acoustic impedance and to determine the physical pa-

rameters describing the liner construction that would yield the required impedance. This method is applicable only to liners of the perforated plate-over-honeycomb construction and does not account for the favorable broadening of the band width characteristics that can be realized by employing a porous material overlay on the perforated sheet or two-cavity construction. However, it is a useful and compact method for preliminary sizing of acoustic treatment.

Since the previously described changes in turbine construction produced compliance with contract goals at approach power, the bypass duct liner performance will be designed for maximum acoustic suppression at takeoff power. Based on the source contributions of Figure 4, a reduction in peak fan PNL to 75 dB was established as a target for the liner design.

The initial concept for the bypass liner employed acoustic treatment in the inner and outer walls of the bypass duct. The liner was composed of two distinct segments, which were intended to attenuate spectral peaks in the 630 and 200 Hz 1/3 octave bands. Table VIII presents the goal and actual liner 1/3 octave band SPL attenuations. This configuration would produce a reduction in peak PNL of 5 dB that exceeds the design requirements. However, a treated surface length of 118 in. is required. Since the distance from the fan rotor trailing edge to the core nozzle exit in the baseline engine configuration is only 95 in, this design is considered unacceptable. In order to reduce the required treated surface length while maintaining adequate acoustic performance, it was necessary to introduce a treated annular ring in the bypass duct at midannulus height. In this configuration, the liner is composed of a single axial segment with peak suppression in the 2000 Hz 1/3 octave band. Table IX presents the performance of this design. This configuration will produce a reduction in peak takeoff PNL of 4.8 dB and requires a treated surface length of only 35.8 in. Table X presents the relevant physical parameters describing the liner. The annular ring results in a 7.5% area blockage. This will require recontouring of the bypass flow path to keep the throughflow velocities at acceptable levels. The high porosity, which corresponds to 109 holes per square inch, is a source of concern. Instead of a true perforated plate, it would probably be more economical to use a porous material such as Brunswick's Felt Metal™ for the facing sheet.

Based on the predicted liner performance, the takeoff EPNL would become 82.1 dB, a reduction of 4.2 dB from the baseline. Similarly, the approach EPNL becomes 88.1 with a lined bypass duct, a reduction of 3.8 dB.

The perforated plate bypass liner described above has the required acoustic suppression characteristics. However, there are shortcomings in this approach. The suppression falls off fairly rapidly at frequencies away from the peak. This characteristic is acceptable when the noise source spectrum is dominated by a discrete tone but becomes a substantial impediment when trying to reduce a broad spectrum source. In

addition, the required dimensions of the treated surface are strongly influenced by the frequency spectrum; high frequencies require long, treated surfaces and low frequencies require a thick backing volume. These characteristics led directly to the need for a mid annulus ring in the current application. The increased mechanical complexity required to accommodate the ring as well as increases in internal pressure losses and increased nacelle drag from increased outer diameter led to a desire to find an alternate mechanism for noise suppression.

Active noise cancellation is an area of current research that holds promise. Application of the method to suppression of the low frequency discrete tones present in an automotive exhaust has proven successful. Silcox and Elliott (Ref 12) have extended the approach by demonstrating effective suppression of low frequency broadband noise in a rectangular duct. In this demonstration, a minimum suppression of the sound pressure spectrum of 20 dB was achieved over frequencies to 700 Hz. Control is achieved through a feed forward scheme in which a detected signal generates a control input downstream of the detection sensor. The geometry of the test duct was selected such that only two modes were below cutoff for the frequency range tested. This simplified the detection and control problem since only a single detection element and two control elements were required. Stability of the control system must be carefully considered. To prevent the control element input from feeding back through upstream acoustic propagation to the detection microphone, thereby producing instability, Silcox and Elliott included a perforated plate liner in the flow path. Since the liner was not the primary means of acoustic control, it was not necessary to provide an optimum design.

While the above demonstration was impressive, extending active cancellation to the control of fan broadband noise is a formidable challenge. As mentioned previously, peak attenuation must be provided in 2 to 2.5 kHz third octave band. Over such a substantial frequency range, the duct can support a substantial number of propagating pressure patterns. If all possible patterns are present, sufficient detection sensors must be present to define the spatial field and sufficient controllers must be present to suppress all modes without feeding energy into others. The implementation of a multivariable control scheme capable of tracking and controlling input signals in the 2.5 to 3.0 kHz range with an acceptable error requires a substantial improvement in controller frequency response relative to the hardware used by Silcox and Elliott and a significant increase in digital processor capability. The processor improvement could potentially be achieved either through improvements in single processor speed or an application of parallel processing. Both approaches are beyond the current state of the art, but should become practical within the next 10 years.

It is hypothesized that the majority of the broadband noise results from interaction of rotor generated and wall turbulence with the bypass vane row. In this hypothesis, each vane would become a dipole radiator

of randomly varying strength responding to the incoming turbulent velocity field. The incoming turbulence should be isotropic. As a result the circumferential spatial Fourier transform of the squared velocity field will have a power spectral density that peaks at zero. This will produce acoustic radiation from the vanes with a peak component at a zero vane to vane phase shift. This leads to the argument that the majority of the radiating acoustic field will be associated with a zero circumferential phase lag. Such a field can be controlled with a similar scheme to Silcox.

The second technical challenge to be met in applying active control to gas turbine fan noise is improving the frequency response of the control element. Silcox employed a standard loudspeaker as the control element in his work. Conversations with Dr. Shoureshi of Purdue University have led us to the conclusion that this speaker was the primary element limiting the frequency response of Silcox's equipment. This could be improved by employing a thin, high compliance plate driven by a piezo electric actuator as the control element.

The effectiveness of active control was demonstrated by computing the takeoff, flyover, and approach EPNL with an attenuation spectrum included for the fan discharge noise, which represents the active controller. Based on the published results of Silcox and private discussions with Shoureshi, a peak attenuation of 15 dB at 2.5 kHz was used for the active controller. The attenuation spectrum for the active scheme was set at a 3 dB roll off per 1/3 octave band at 3.1 kHz and for all bands below 2.5 kHz. This roll off was increased to 6 dB per 1/3 octave for bands above 3.1 kHz. Using these attenuation characteristics, the resulting EPNLs were the following:

- Takeoff 83.5
- Approach 89.2

This represented a reduction of 3 dB from the baseline takeoff predictions and 1 dB for approach. This level of suppression is approximately equal to that achieved with the passive liner.

2.4 SUMMARY

This section has evaluated and compared methods for reducing the far-field noise produced by the fan and low pressure turbine of the baseline UHBR engine. Fan noise suppression is required during both approach and takeoff operations. Several methods were evaluated for reducing the strength of the fan noise field at the source. The most effective of these methods was increasing rotor to stator spacing, which reduced both the broadband and tone components of the fan noise field, and stator sweep, which effectively suppresses tones at multiples of the blade passing frequency. Due to the relatively strong con-

tribution of the broadband to the overall fan noise, its suppression is critical to reducing the far-field levels to the study goals. Because of a lack of both data and analysis methods, it was not possible to evaluate methods for reducing broadband noise directly at the source. Based on the current knowledge base, control of the propagation of the broadband field through the bypass ducting will be required. A conventional perforated plate over a honeycomb liner was designed which provided the required broadband suppression. To keep the length of the treated surface within practical limits, a ring of treated surface at the midannulus radius was required. Active noise cancellation is a second intriguing possibility for reducing the fan broadband. However, substantial improvements in the frequency response of the system hardware components over current laboratory demonstration models will be required before its use in a gas turbine engine.

Based on current information, the turbine noise field is controlled by the fundamental blade passing tones of the low pressure turbine rotors. It was demonstrated that by adjusting the vane and blade airfoil numbers to satisfy the cutoff criteria for the lowest wave number rotor-stator interaction mode, the turbine noise suppression goals could be met. When implemented in the UHBR engine concept, an increase in centerline low pressure turbine speed and a decrease in stage count from three to two was required to satisfy the cutoff criteria while keeping the last stage airfoil count reasonable.

III. REDUCED NOISE ENGINE CONFIGURATION

In Section II, numerous concepts were examined for their noise reduction potential. As part of this examination, the impact of each of these concepts on takeoff and approach EPNL was assessed with all other noise sources held fixed. Based on these results the following concepts were selected as most promising for engine application:

- swept bypass vane for reduction of fan blade passing tones
- bypass duct suppression, based on a perforated plate liner, of fan broadband noise
- two-stage low pressure turbine configured to assure cutoff of the fundamental turbine tones

A revised configuration engine was developed employing these noise suppression concepts, which is shown in cross-section in Figure 15. The impact of these changes on the fan and LP turbine component performance is shown in Tables XI - XIII. No change was made to the high pressure spool. Reviewing some of the changes from the baseline engine, the bypass vane sweep has been set at 40 deg and the bypass duct outer flow path diameter increased to offset the blockage of the midannulus acoustic treatment. Due to the thickness of the acoustic treatment, it was necessary to increase the cowl length to accommodate the thrust reverser. The transition duct between the HP and LP turbine required to incorporate the two-stage low pressure turbine resulted in an unacceptable bearing span on the LP rotor system. To rectify this, the rear bearing on the LP spool was moved in front of the LPT producing an overhung design. The new bearing placement allowed the HP and LP rear bearings to be served by a common sump. The removal of the separate HP rear sump required by the original engine configuration and the elimination of one of the LP turbine stages helped offset most of the weight increase of the other changes in the engine. While the configuration shown may not represent the best that could be achieved, it does show that the acoustic control concepts selected can be integrated into a practical propulsion package.

A comparison of the predicted far field noise levels of the baseline and revised engine configurations is shown in Figure 16. The changes incorporated in the revised engine configuration were successful at substantially reducing far field noise, resulting in reductions of 6.4 dB during the flyover portion of takeoff, 6.9 dB at the sideline measuring station, and 5.7 dB during landing approach. Current certification rules allow engine thrust levels to be reduced during the flyover portion of the takeoff measurement once a predetermined altitude has been reached. Figure 16 shows that employing such a thrust cutback reduces the takeoff EPNL by approximately 1 db for both the baseline and revised engine configurations. For the results presented, installed engine thrust was reduced from 12,000 to 8,000 lb, requiring that the climb out angle be reduced from 10.3 to 5.4 deg. As a result, the aircraft altitude as it passes over the monitor station will decrease from 3260 ft to 2255 ft.

To assess the economic impact of a reduced acoustic emissions requirement, the baseline and revised UHBR engines were compared on the basis of weight, fuel burn during a standard mission, acquisition costs, and direct maintenance costs to a conventional bypass ratio design. These individual items were then combined into an aggregate comparator, direct operating cost. A summary of this comparison is presented in Table XI. Referring to the table, the bare baseline engine is approximately 105 lb lighter than the bare revised engine. When the differences in nacelles are included, a total weight increases by 207 lb. By way of comparison, a similar thrust class conventional turbofan (6:1 BPR) employing a common core with the study engines has an estimated bare weight of 3300 lb. Thus, a fairly small weight penalty is associated with the changes required to effect a substantial noise reduction for an UHBR design. However, a substantial weight differential exists between a conventional bypass ratio turbofan and the UHBR.

The UHBR concept exhibits a significant reduction in thrust specific fuel consumption relative to current generation turbofans. For a 550 nautical mile mission, indicative of a standard block length for regional airline operations, the baseline UHBR engine would burn 4518 lb of fuel. The reconfigured engine, with reduced acoustic emissions, would require 4671 lb of fuel, for a 3.4% increase. The majority of the fuel burn increase is the result of the two percentage point loss in turbine efficiency for a two-stage low pressure turbine. However, the conventional 6:1 bypass ratio design would burn 5185 lb of fuel during the same mission. The additional 514 lb of fuel that an airplane would have to carry with a conventional powerplant would offset approximately half the weight penalty incurred by a UHBR design.

Two related concerns of all airlines when introducing a new technology into revenue operations are dispatch reliability and direct maintenance costs. The shop visit rate is a measure of premature or unscheduled removals, and therefore reflects the engine impact on dispatch reliability. The baseline and reduced noise UHBR engines are estimated to have identical shop visit rates (SVR) of 0.121 events/1000 engine flight hours. This translates to 1 unscheduled removal every 8264 flight hours. By comparison, a conventional turbofan is estimated to have a marginally higher premature removal rate of 0.125, or 1 unscheduled removal every 8000 flight hours. Of course, all engines require scheduled maintenance. For both UHBR designs, the mean time between overhaul (MTBO) is set at 30,000 flight cycles or 30,000 hours for the current mission based on replacement schedule for life limited components. When combined with the estimated frequency of unscheduled maintenance, the direct maintenance costs for either UHBR design are estimated to be $74/engine flight hour in 1991 dollars. The conventional engine also has an MTBO of 30,000 hours and a direct maintenance cost of $71/engine flight hour.

The final element for comparison is the acquisition cost. None of the candidate engine configurations is a clear winner in this comparison. The baseline UHBR engine is estimated to cost $3.2 million with nacelle.

The reduced noise UHBR price is $3.15 million. A conventional turbofan of this thrust class has an estimated selling price of $2.95 million. All prices are in 1991 dollars and are based on a 1,000 engine production run at a rate of 20 engines per month.

All the above engine cost factors were combined, along with certain assumptions on the aircraft generated costs such as crew costs and depreciation, to arrive at the direct operating cost (DOC). This cost is based on operating a 100-passenger twin engine regional aircraft over a 550 nautical-mile block at a 100% load factor. Fuel costs were based on a retail price of 75 cents/gallon. For the base UHBR engine, this procedure leads to a DOC of 10.50 cents/seat mile. For the low noise configuration UHBR, the DOC is 10.57 cents/seat mile. This compares to a DOC of 10.47 cents/seat mile for a current generation turbofan. Somewhat surprisingly, the predicted operating costs for all three engines are virtually identical. Close examination of the elements used to calculate DOC shows the results to be dominated by purchase costs and fuel expense. At the assumed fuel price of 75 cents/gallon, the increased fuel usage of the 6:1 BPR engine was almost exactly offset by a reduced purchase price. Increases in the stage length to 1000 n-miles or an increase in fuel price to approximately $1.00/gallon would be required to show any clear advantage for the higher bypass ratio engine. Based on conversations with regional airline operators, the DOC level associated with the reference 6:1 BPR engine is near the current average, with a low of 6 cents/seat-mile and a high of 18 cents/seat-mile. These operations indicate that increases in DOC as small as 2% will have a measurable impact on their profitability. Assuming the noise certification limit remains at Stage 3, the conventional bypass ratio engine has a small economic advantage over a very high bypass ratio concept in performing the regional airline mission. If noise certification limits are lowered such that a 10 dB reduction in far-field acoustic levels is required, the required modifications to the UHBR engine will cause a marginal but acceptable increase in DOC. A conventional bypass ratio turbofan would require large amounts of fan duct treatment to even approach this reduced level of noise. The resulting engine weight and drag increase would produce large increases in fuel burn. The additional complexity of the noise abatement system would likely increase the purchase price as well. The final result would be a propulsion system with a significant increase in DOC relative to current standards, making it economically unattractive.

In summary, a UHBR engine without any supplemental noise abatement equipment can comply with the current FAR 36 Stage III noise limits. However, for Stage 3 certification limits, a conventional 6:1 bypass ratio engine has a lower DOC for a typical regional airline mission. Employing current noise abatement technology, the UHBR engine can comply with noise certification limits that are 10 dB below the current Stage 3 limits. This noise reduction is accomplished with only a marginal impact on DOC. A conventional turbofan cannot meet such a stringent noise standard.

IV. TECHNOLOGY ASSESSMENT/PLAN

The results of this study indicate that the acoustic emissions from an UHBR engine can be reduced sufficiently to meet the contract goals. However, the validity of these results must be measured against our confidence in the accuracy of the predictive methods used to produce them. The core of the predictive methodology continues to be empirically based. The majority of the data base used to develop these empirical relations were gathered in the 1970s. Review of the engine cycle parameters indicates that current engines often operate at the fringes of the parameter ranges used for the data correlation. The acoustic impact of new technology, like wide chord, shroudless fans, is not reflected by this data base. Attempts to replace this reliance on empiricism have been made. However, most attempts to develop first principles analysis methods have employed, by necessity, significant simplifying assumptions. This is amply illustrated by the analysis method used to determine the impact of stator sweep on fan tonal noise. This method neglected the unsteady aerodynamic communication between adjacent airfoils that can be a controlling factor in certain cases. It must be concluded that the predictive methodology remains somewhat weak.

Similarly, one of the more interesting discoveries during this study was the importance of fan broadband noise in determining far-field levels. Most of the previous research into the fan noise problem has focused on the blade passing tones. As a result, the physical mechanisms of broadband noise generation are poorly understood. While it is generally agreed that broadband noise generation is rooted in turbulence, the actual sources of turbulence within the gas turbine engine are many. These include the secondary flowfield that develops due to tip leakage, airfoil boundary layer transition, and shroud boundary layers. Their relative strengths are unknown and could be important. The exact mechanism for converting turbulent transport to acoustic energy is not known. Turbulence can produce a direct pressure field, as in jet mixing noise, which is quadrapole in nature. It is also possible for the turbulent velocity field to interact with stationary surfaces like downstream vanes, producing an acoustic field with a dipole nature similar to the periodic rotor wakes interacting with the vanes. There could also be a relationship between tonal and broadband noise involving scattering of the tonefield through interaction with turbulent structures in the flow. Fundamental work needs to be done in these areas to assist in identifying potential methods for directly reducing the strength of the broadband component.

As a result of the lack of understanding of the generation mechanisms of fan broadband noise, it was necessary to resort to methods for reducing noise propagation through the engine ducting to control it. Current methods center on porous plate liner systems. When used for the control of fan broadband noise in a UHBR engine, either an extremely long liner or a secondary treated surface within the bypass duct was required. Either approach leads to an increase in cowl wetted area and, as a result, nacelle drag.

Reduction of nacelle drag will be a major issue in integrating a UHBR propulsion package with an airframe. Application of active cancellation to control of the fan broadband could assist in minimizing the drag by removing the need for long cowls or increased flow path diameter to accommodate the blockage of a midannulus treated ring. However, current demonstration systems employing active cancellation are too limited in frequency response. Major hardware innovation will be required to alleviate this limitation. In addition, all current approaches focus on applying control in the duct, while a more optimum scheme might apply the control input on a vane surface. Advances in signal processing and adaptive control algorithms, such as parallel processing and neural networks, might also be useful. These areas need exploration.

To address the technology limitations detailed previously, both experimental and analytical research are required. The limitations of current predictive methodology would be most thoroughly and economically addressed by the development of a first principles acoustic model. The physical model of noise generation resulting from flow turbulence is not sufficiently developed to support such an approach at this time. However, the current understanding of pure tone production within a turbomachine appears to be sufficient to attempt an analytical predictive method. We propose to develop a predictive tool applicable to fan blade passing tones resulting from rotor-stator interaction. In developing the approach, it is desirable to minimize the mathematical complexity. At the same time, sufficient detail must be retained to allow new concepts to be retained. We believe that a linearization of the inviscid, unsteady Euler equations of fluid flow meets these criteria. To justify this assertion, we offer the following observations:

- Sound propagation and radiation remain linear processes even at levels sufficient to result in permanent auditory damage.
- The spacing between the fan rotor trailing edge and vane leading edge in current commercial engines is sufficiently large to negate any nonlinear interaction in the development of the rotor wake.
- In-house computational studies show that even intense vortical (wake-like) disturbances react with the vanes in a linear fashion for subsonic flows.

A cost effective approach to developing such a tool is a linearized version of the Advanced Ducted Propfan Analysis Code (ADPAC) produced for NASA by Dr. Ed Hall. The linearization would be with respect to the full, nonlinear, steady solution presently available. This would allow a consistent definition of the incoming wake velocity profile to be provided for the unsteady solution. As currently conceived, the steady-state solution would retain viscous effects, while the unsteady solution would neglect viscous effects. As a result, the unsteady solution would not satisfy the rigorous, no slip boundary conditions at the wall. This is analogous to determining the unsteady solution in a domain, which excludes the wall

boundary layers. The wall boundary condition would then require a specification of impedance for problem closure. Such a condition would be developed as part of the effort. The unsteady solution algorithm could be implemented in either the frequency or time domain. A full three-dimensional unsteady solution would be implemented. To retain a finite computational domain boundary, a semianalytic mopping of the near field to far field, like the wave envelope method, would be employed. This approach will allow a more detailed examination of sweep, rotor reflection/transmission, and jet diffraction effects.

To increase understanding of the generation process for broadband noise, we believe an experimental program is required. The experimental vehicle would be a single-stage fan rig compatible with NASA Lewis's fan drive system. The rig would be used to explore the generation and control of broadband noise, as well as corroborating the effectiveness of selected noise control technology. The test program would involve a detailed mapping of the fan performance characteristics, flowfield, and acoustic field. In addition, exterior far-field measurements will be performed. A complete description of proposed rig configurations will appear in the next section.

Development of active noise cancellation technology would also be performed experimentally. The experimental setup would be similar to the simple arrangement of Silcox and Elliott, employing an annular rather than a rectangular test section. The program would involve basically four (4) tasks. The initial task would center on selection of detection sensors. This effort would focus on identifying off-the-shelf hardware with adequate survivability for a gas turbine application, capable of a nearly flat frequency response to 5 kHz, and with an adequate sensitivity to ensure a usable signal to noise ratio. Potential devices include condenser microphones, semiconductor pressure transducers, and piezo-electric transducers. The second task would involve development of an improved frequency response control element. This controller must have similar characteristics to the detector and must be capable of reducing a broadband spectrum with frequencies up 3.5 kHz by approximately 15 dB in OASPL. It is felt that standard loudspeaker arrangements will not be capable of meeting these requirements. Allison would investigate alternative arrangements, such as low compliance, low mass vibrating elements driven by piezo-electric devices. The third task involves development of a digital signal processing unit and the required signal processing software. A currently available commercial digital signal processing unit would be used for this program. No attempt at implementing a parallel architecture would be attempted in this initial program, only serial processing. The potential application of neural networking or other artificial intelligence scheme for adaptive control would be investigated. The final task would be a demonstration/validation program of the closed loop control system. The purpose of the test would be to experimentally demonstrate the frequency range over which acceptable noise control is possible.

V. PRELIMINARY DESIGN OF FAN RIG

Based on previously reported results, a preliminary design of a fan rig has been completed. As requested, this design was configured for compatibility with an existing NASA fan drive system. To maintain this compatibility, all flow path interior components were constrained to a twenty-two (22) inch diameter. A layout view of the baseline configuration is shown in Figure 17. This configuration employs a fan rotor that was directly scaled from the baseline engine fan of Figure 1. The compressor boost stage on the low pressure shaft of Figure 1 was not carried into the rig design to maintain mechanical simplicity. The downstream vane has, as a result, been modified from the configuration of Figure 1 to provide the required flow swirl removal at the hub. Figures 18-22 show five suggested variations on the baseline rig configuration intended to explore the fan acoustics.

The configurations shown in Figures 18 and 19 will demonstrate and corroborate the fan noise reduction potential of the configuration chosen for the final engine design. This data is to be gathered in two steps to clearly define the effectiveness of each of the components. The initial configuration (Figure 18) will employ only the swept vane. This will demonstrate the effectiveness of sweep in reducing the fan blade passing tones relative to the theoretical predictions. It is crucial that sweep prove effective at controlling tonal noise for the conclusions of the study to hold. As an option in the test program, a series of vane configurations employing progressive increases in sweep could be tested. This would parametrically define the effects of sweep on fan tone noise production and allow an optimum angle for engine applications to be determined. The second rig configuration (Figure 9) includes a porous plate lining for the discharge duct to reduce broadband noise. This rig configuration is a scaled version of the reconfigured engine system of Figure 15. This data will be used directly to substantiate that the predicted far field noise reductions are realized in practice.

The passive treatment schemes discussed to this point have all focused on modifications to the bypass duct wall. During internal research and development (IR&D) funded testing performed at Allison in the early 1970s, a modified vane employing a perforated plate-like suction surface was shown to be a fairly effective sound attenuation device. The approach modifies the unsteady pressure distribution induced by the wake on the airfoil surface. The full potential of this method was never explored experimentally, and the analysis tools available at the time were not adequate for designing the treated surface. Allison has made substantial progress since that time in the computational analysis of unsteady flows. Currently available computational methods developed for aeroelastic predictions would be used to determine the optimum acoustic impedance for the surface treatment. If substantial reductions in the surface unsteady pressures can be achieved, the need for duct treatment may be removed. Figure 21 shows how such an arrangement would be incorporated in the rig.

The rig configuration shown in Figure 22 is intended to determine the sensitivity of fan broadband noise to fan secondary flow and shroud boundary layer flows. Two separate flow removal devices are shown, one directly above the blade tip to control endwall recirculation and a second downstream of the fan rotor that would act as a boundary layer scoop. The figure shows flow removal being accomplished through a porous surface. More detailed flow analysis may indicate a better approach, such as a scoop. The two suction systems would be controlled separately. While not shown explicitly in the figure, it would also be possible to fabricate the fan airfoils with radial flow channels connected to the suction and pressure surfaces. Through a combination of tip suction and centrifugation, such a scheme could be used for airfoil boundary layer removal. Substitution of solid and channeled airfoils would then allow the participation of the airfoil boundary layer in the production of broadband noise to be determined.

The figures presented in this section represent conceptual sketches rather than firm proposals. No design analysis was attempted due to the lack of detail drawings for NASA-supplied hardware. If one or more of these ideas are selected for further consideration, changes in the layout may be required to meet standard design criteria. These drawings are included as a basis for discussion.

Table I.
Fan aerodynamic and mechanical design characteristics.

Fan		
	Inlet corrected flow, $w\sqrt{\theta}/\delta$	1035.5 lb/sec
	Inlet specific flow, $w\sqrt{\theta}/\delta A$	41.53 lb/sec-ft^2
	Inlet corrected tip speed, $U_t/\sqrt{\theta}$	1000 ft/sec
	Pressure Ratio, R_c	1.382:1
	Inlet hub/tip radius ratio, r_h/r_t	0.30
	Adiabatic efficiency, η_{t-t}	89.2%
	Corrected speed, $N/\sqrt{\theta}$	3227.5 rpm
	Number of blades	19
	Number of vanes	43
	Gear ratio	3.16:1
Quarter stage		
	Inlet corrected flow, $w\sqrt{\theta}/\delta$	110.24 lb/sec
	Inlet specific flow, $w\sqrt{\theta}/\delta A$	33.05 lb/sec-ft^2
	Inlet corrected tip speed, $U_t/\sqrt{\theta}$	558 ft/sec
	Pressure ratio, R_c	1.115:1
	Inlet hub/tip radius ratio, r_h/r_t	0.764
	Speed, N	3227.5 rpm
	Number of inlet vanes	60
	Number of blades	56
	Number of outlet vanes	60

Table II.

High pressure compressor aerodynamic and mechanical design characteristics.

Rotor inlet corrected flow, $w\sqrt{\theta}/\delta$	55.84 lb/sec
Rotor inlet specific flow, $w\sqrt{\theta}/\delta A$	41.99 lb/sec-ft^2
Rotor inlet speed, U_t	1,368.2 ft/sec
Overall pressure ratio, R_c	24.76:1
Rotor inlet hub/tip radius ratio, r_h/r_t	0.708
Speed, N	14,154 rpm
Number of stages	10

Number of airfoils

Stage Number	Blades	Vanes
1	28	38
2	39	46
3	51	64
4	62	72
5	70	80
6	70	86
7	75	92
8	77	98
9	77	96
10	77	96

Table III.
Turbine design point velocity diagram parameters (39,000 ft/0.8 Mn).

	HPT			LPT	
Parameter	Stg 1	Stg 2	Stg 3	Stg 4	Stg 5
Stage flow coefficient, Vx/u	0.36	0.50	0.48	0.44	0.51
Stage load coefficient, $gJ\Delta h/Um^2$	1.72	1.68	1.09	1.13	1.13
Stage exit AN^2-rpm^2in^2	$1.5x10^{10}$	$2.5x10^{10}$	$2.9x10^{10}$	$4.5x10^{10}$	$6.0x10^{10}$
Stage exit swirl, deg	-41.7°	-30.7	-7.1	-8.9	-9.5
Stage exit Mn	0.31	0.38	0.26	0.28	0.39
Stator exit absolute Mach No, Mn	0.75	0.85	0.61	0.68	0.74
Rotor exit relative Mach No, Mn	0.78	0.87	0.63	0.70	0.83
Number of vanes	44	64	84	69	70
Number of blades	69	86	67	68	75

Table IV.
Turbine design point aerodynamic requirements (39,000 ft/0.8 Mn).

Parameter	HPT	LPT
Rotor inlet temp, RIT-°R	2,813	1,982
Turbine inlet pressure, P_t-psi	140.9	29.6
Actual work, Δh-B/lb	229	172
Rotational speed, N-rpm	14,154	8,830
Rotor inlet flow rate, W-lb/sec	20.4	22.4
Equivalent work, $\Delta h/\theta$ B/lb	43.7	46.3
Equivalent rotor inlet flow rate $w\sqrt{\theta}\varepsilon/\delta$ lb/sec	5.10	22.28
Equivalent rotational speed, $N/\sqrt{\theta}$ rpm	6,177	5,841
Total/total expansion ration, Re_{tt}	4.75	5.30
Goal total/total efficiency, η_{tt}-%	89.7	92.6

Table V. Comparison of conventional BPR and ultrahigh BPR engines.

- Common core
- Common technology
- Acoustic estimates are for bare 2 engine installation
- No ground reflection included

			Takeoff EPNL		Sideline EPNL		Approach EPNL	
Engine BPR	Weight	SFC	Pred	FAR 36	Pred	FAR 36	Pred	FAR 36
6:1	3263 lb	0.36	90	89	100.8	95	96.8	98.3
14:1	3961 lb	0.27	86.3	89	92.7	95	91.2	98.3

Table VI. Flight path and engine operating parameter description.

Takeoff

• Aircraft velocity	214 ft/sec
• Thrust/engine	12,042 lb (installed)
• Flight path angle	10.3 deg
• Altitude at flyover monitor	3260 ft
• Takeoff gross weight	93,300 lb

Approach

• Aircraft velocity	223 ft/sec
• Thrust/engine	3000 lb (installed)
• Flight path angle	-3 deg
• Altitude at flyover monitor	394 ft

Table VII. Comparison of stage airfoil numbers for two- and three-stage low pressure turbine.

	3-stage LPT	2-stage LPT
Vane	84	30
Rotor 1	67	48
Vane 2	69	72
Rotor 2	68	111
Vane 3	70	N/A
Rotor 3	75	N/A

Table VIII. Comparison of goal and actual liner performance, Configuration 1.

1/3 OB center frequency	SPL suppression goal	SPL suppression actual
315	1.6	4.5
400	4.5	5.6
500	6.1	6.9
630	10.9	8.5
800	8.7	9.0
1000	9.5	9.5
1250	11.1	10.3
1600	12.2	11.6
2000	12.5	13.3
2500	10.3	9.4
3150	4.5	5.9

Table IX. Comparison of goal and actual liner performance, Configuration 2.

1/3 OB center frequency	SPL suppression goal	SPL suppression actual
315	1.6	1.8
400	4.5	2.4
500	6.1	3.2
630	10.9	4.2
800	8.7	5.6
1000	9.5	7.3
1250	11.1	9.5
1600	12.2	12.8
2000	12.5	16.7
2500	10.3	10.8
3150	4.5	6.0

Table X. Bypass duct liner–physical parameters.

Cover sheet thickness	0.020 in.
Diameter of holes in cover sheet	0.050 in.
Honeycomb thickness (1/2 total)	1.2 in.
Porosity	22%

Table XI.

Fan aerodynamic and mechanical design characteristics for quiet engine configuration.

Fan	
Inlet corrected flow, $w\sqrt{\theta}/\delta$	1035.5 lb/sec
Inlet specific flow, $w\sqrt{\theta}/\delta A$	41.53 lb/sec-ft^2
Inlet corrected tip speed, $U_t/\sqrt{\theta}$	1000 ft/sec
Pressure Ratio, R_c	1.382:1
Inlet hub/tip radius ratio, r_h/r_t	0.30
Adiabatic efficiency, η_{t-t}	89.2%
Corrected speed, $N/\sqrt{\theta}$	3227.5 rpm
Number of blades	19
Number of vanes	43
Gear ratio	3.68:1
Quarter stage	
Inlet corrected flow, $w\sqrt{\theta}/\delta$	110.24 lb/sec
Inlet specific flow, $w\sqrt{\theta}/\delta A$	33.05 lb/sec-ft^2
Inlet corrected tip speed, $U_t/\sqrt{\theta}$	558 ft/sec
Pressure ratio, R_c	1.115:1
Inlet hub/tip radius ratio, r_h/r_t	0.764
Speed, $N/\sqrt{\theta}$	3227.5 rpm
Number of inlet vanes	60
Number of blades	56
Number of outlet vanes	60

Table XII.

Turbine design point velocity diagram parameters (39,000 ft/0.8 Mn) for quiet engine configuration.

	LPT	
Parameter	Stg 3	Stg 4
Stage flow coefficient, Vx/u	0.47	0.51
Stage load coefficient, $gJ\Delta h/Um^2$	1.97	1.304
Stage exit AN^2-rpm^{2}in^2	3.9×10^{10}	5.99×10^{10}
Stage exit swirl, deg	-41	-11.4
Stage exit Mn	0.41	0.39
Stator exit absolute Mach No, Mn	0.89	0.86
Rotor exit relative Mach No, Mn	0.91	0.84
Number of vanes	30	72
Number of blades	48	111

Table XIII.

Turbine design point aerodynamic requirements (39,000 ft/0.8 Mn) for quiet engine configuration.

Parameter	HPT	LPT
Rotor inlet temp, RIT-°R	2,813	1,982
Turbine inlet pressure, P_t-psi	140.9	29.6
Actual work, Δh-B/lb	229	169.6
Rotational speed, N-rpm	14,154	11,275
Rotor inlet flow rate, W-lb/sec	20.4	22.4
Equivalent work, Δh/θ B/lb	43.7	44.4
Equivalent rotor inlet flow rate $w\sqrt{\theta}\,\varepsilon/\delta$ lb/sec	5.10	22.51
Equivalent rotational speed, $N/\sqrt{\theta}$ rpm	6,177	5,836
Total/total expansion ration, Re_{tt}	4.75	5.17
Goal total/total efficiency, η_{tt}-%	89.7	89.6

Table XIV.

Comparison of elements of DOC for conventional and UHBR engines.

Configuration	Weight (lb)		Fuel burn(1) (lb)	Acquisition(2) cost-$	Direct maintenance(3) cost
	Engine	Engine & nacelle			
Conventional BPR (6:1)	3,263	4,523	5185	2,950,000	$71
Baseline UHBR (14:1)	3,961	5,440.7	4,518	3,150,000	$74
Quiet UHBR (14:1)	4,066	5,648	4,671	3,200,000	$74

(1) 550 nautical-mile mission - 2 engines

(2) estimated with nacelle

(3) Dollars/engine flight hour

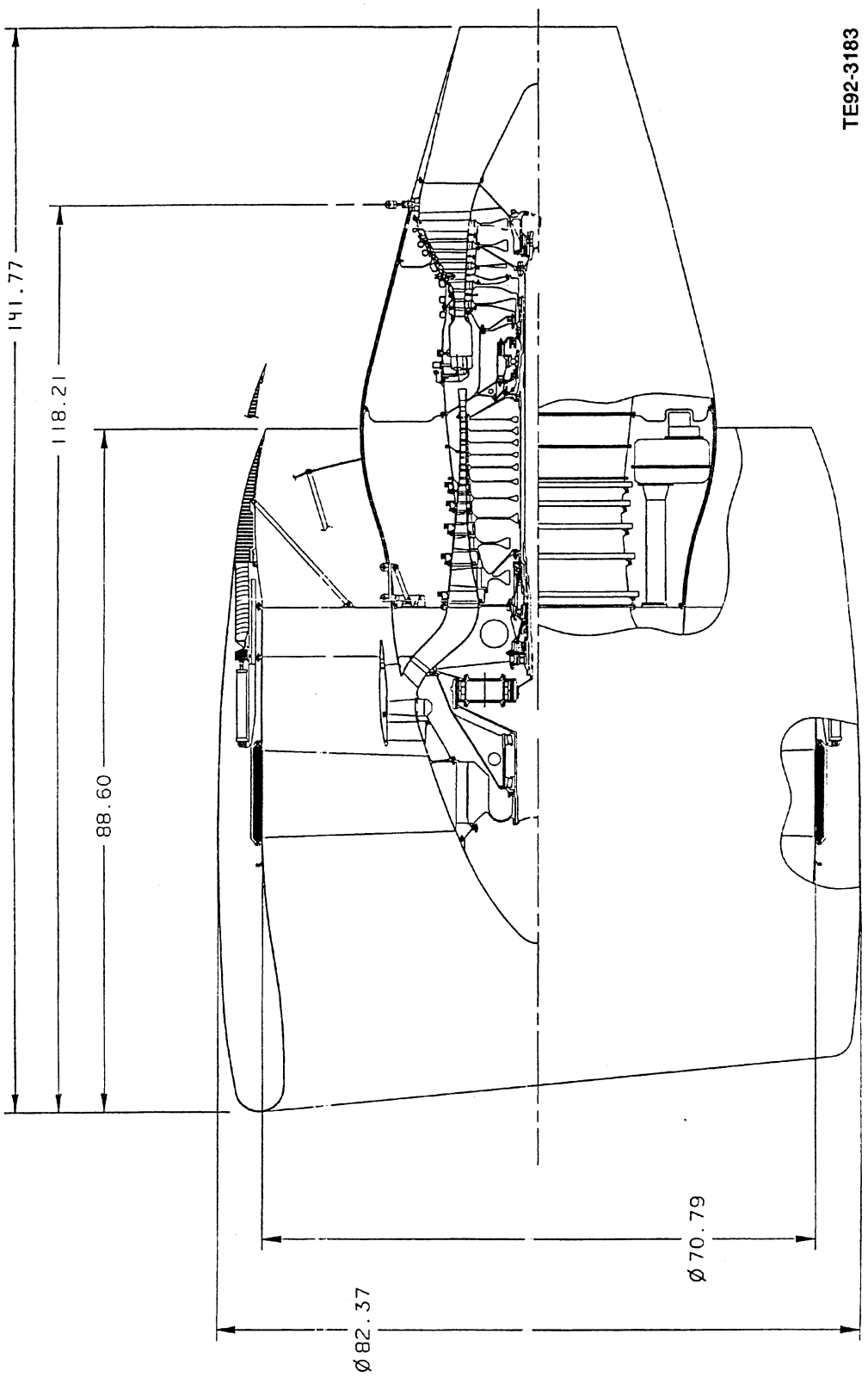

Figure 1. Baseline 15,000 lb thrust UHBR engine.

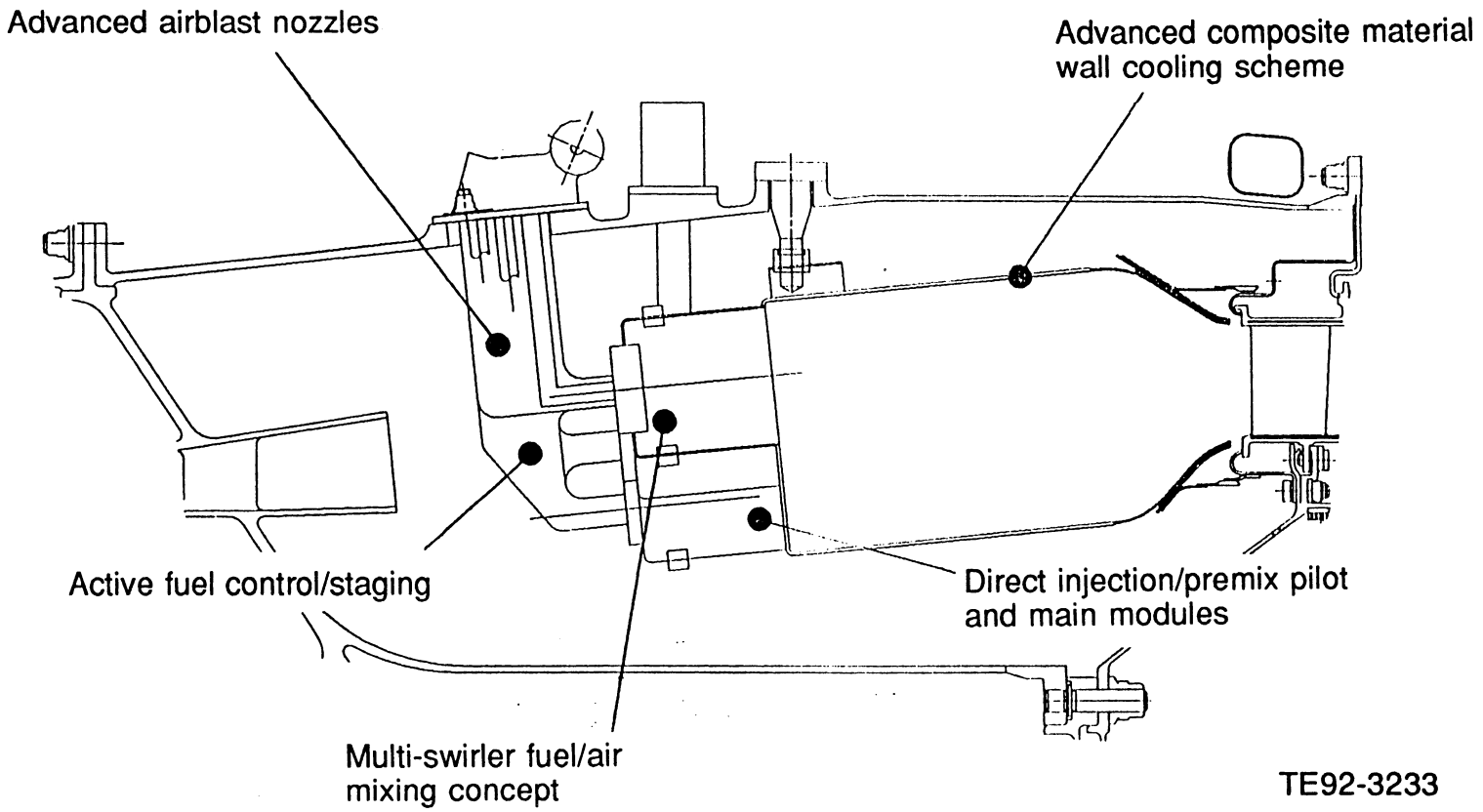

Figure 2. Multi-injection lean (MIL) combustor.

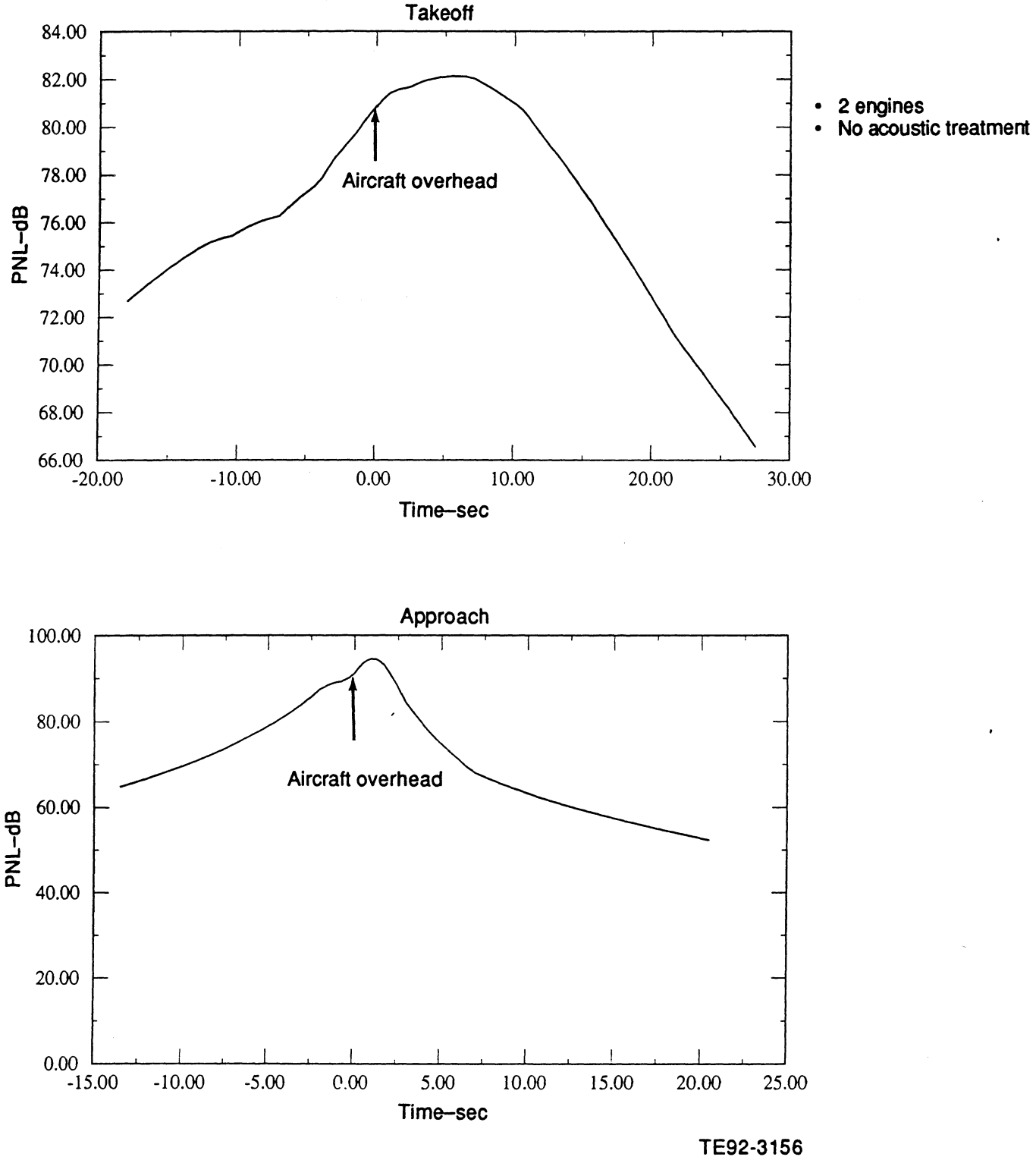

Figure 3. Baseline engine flyover perceived noise level time history.

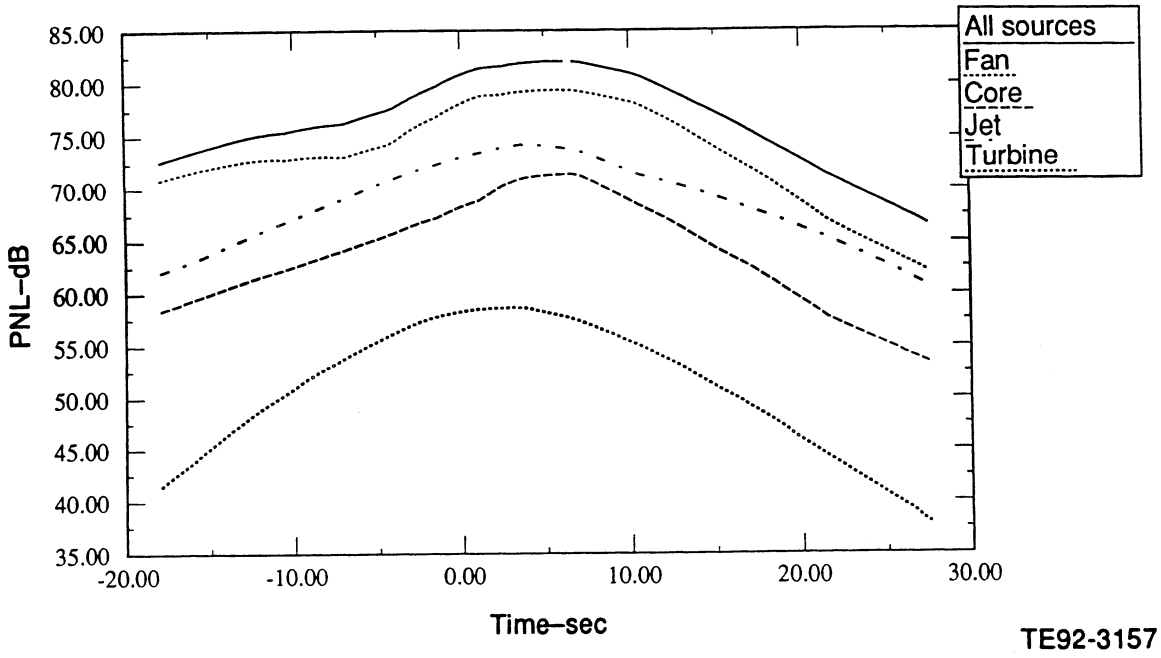

Figure 4. Source contribution to takeoff PNL history.

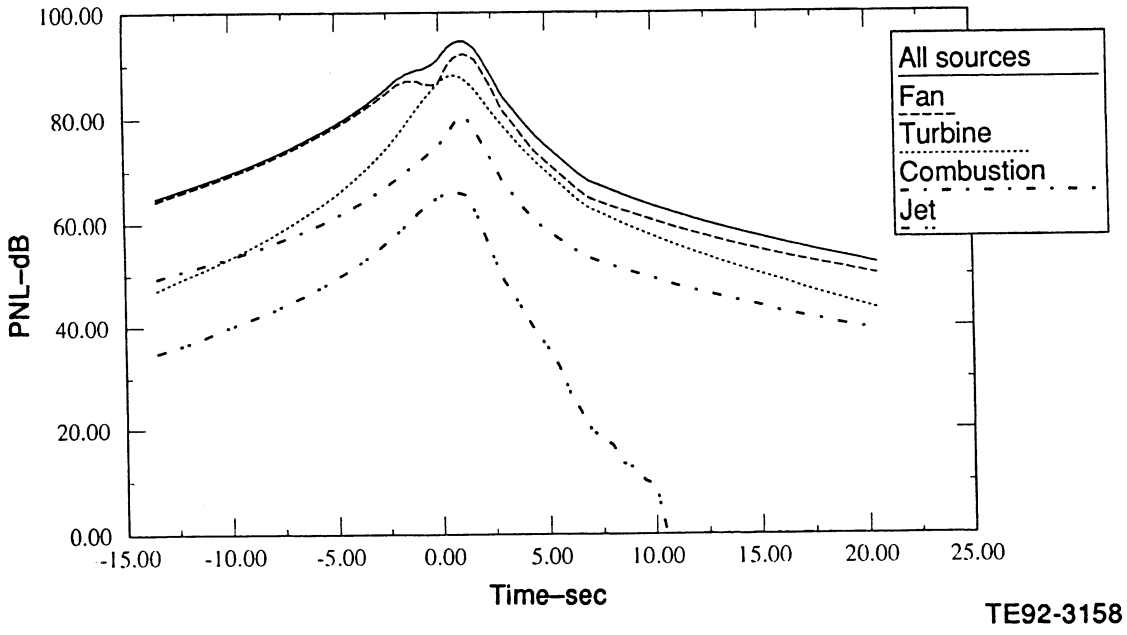

Figure 5 Source contribution to approach PNL history.

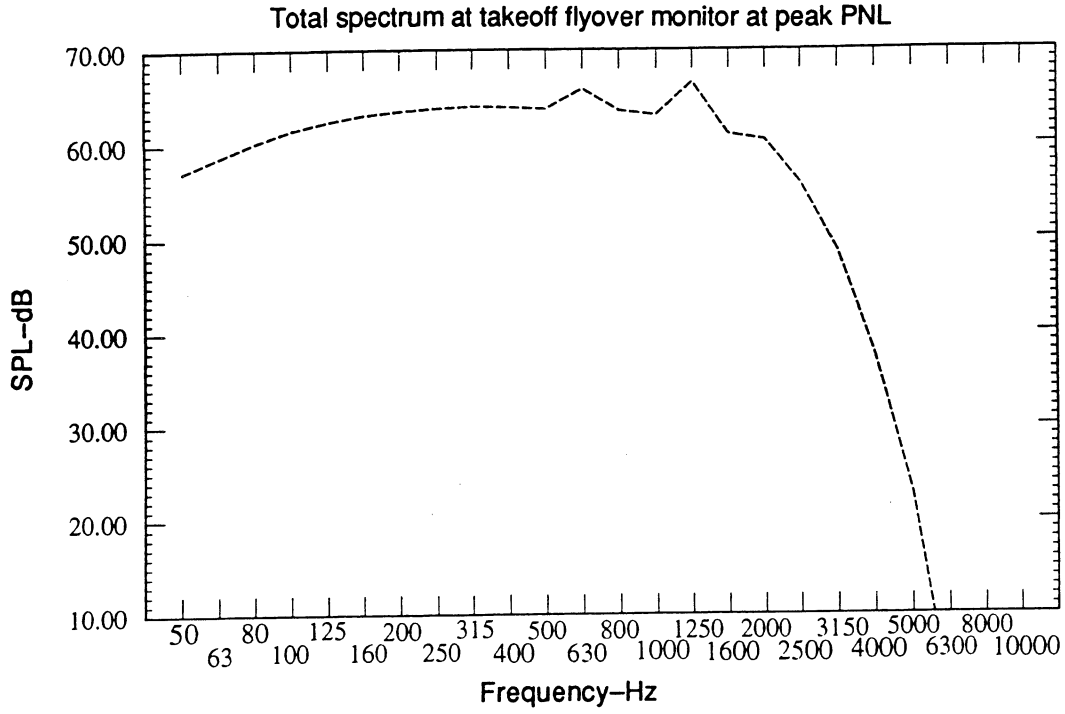

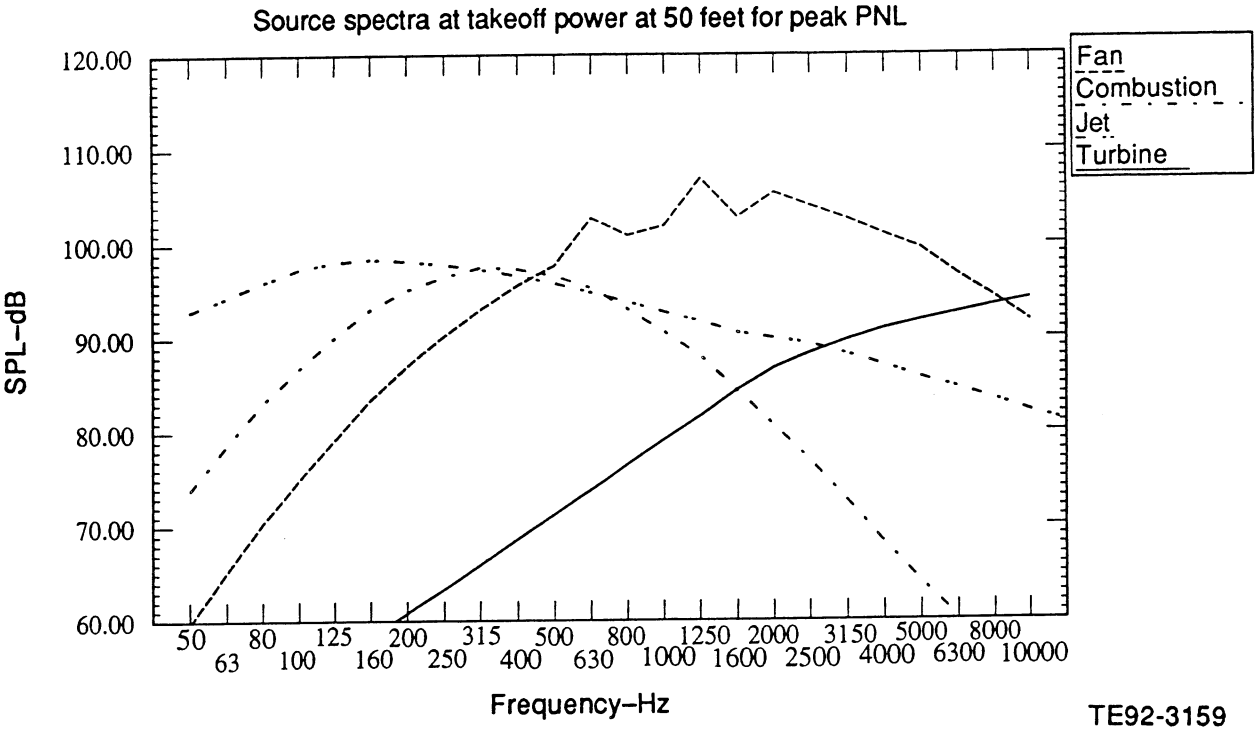

Figure 6 Component contribution to spectrum at maximum takeoff PNL.

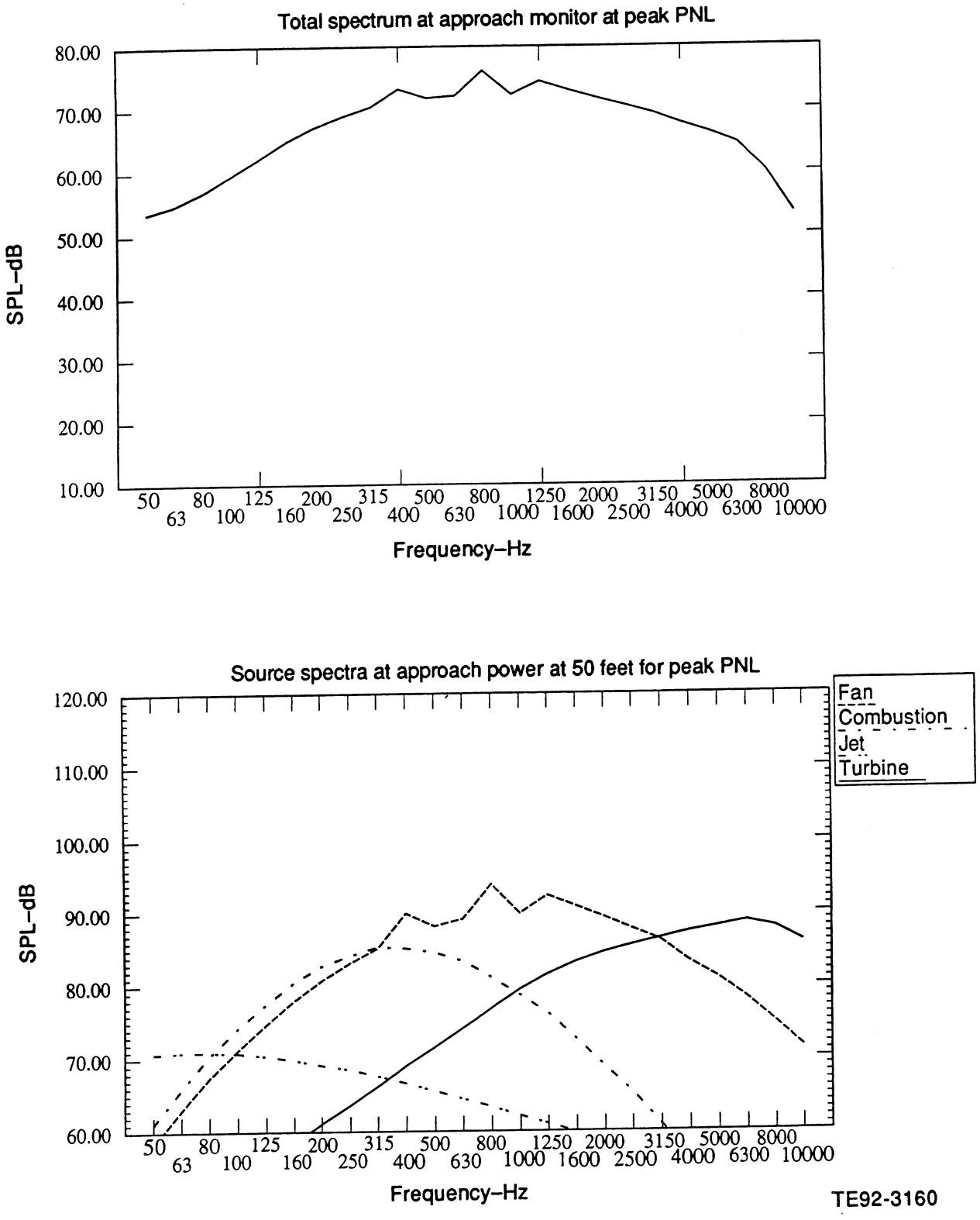

Figure 7 Component contribution to spectrum at maximum approach PNL.

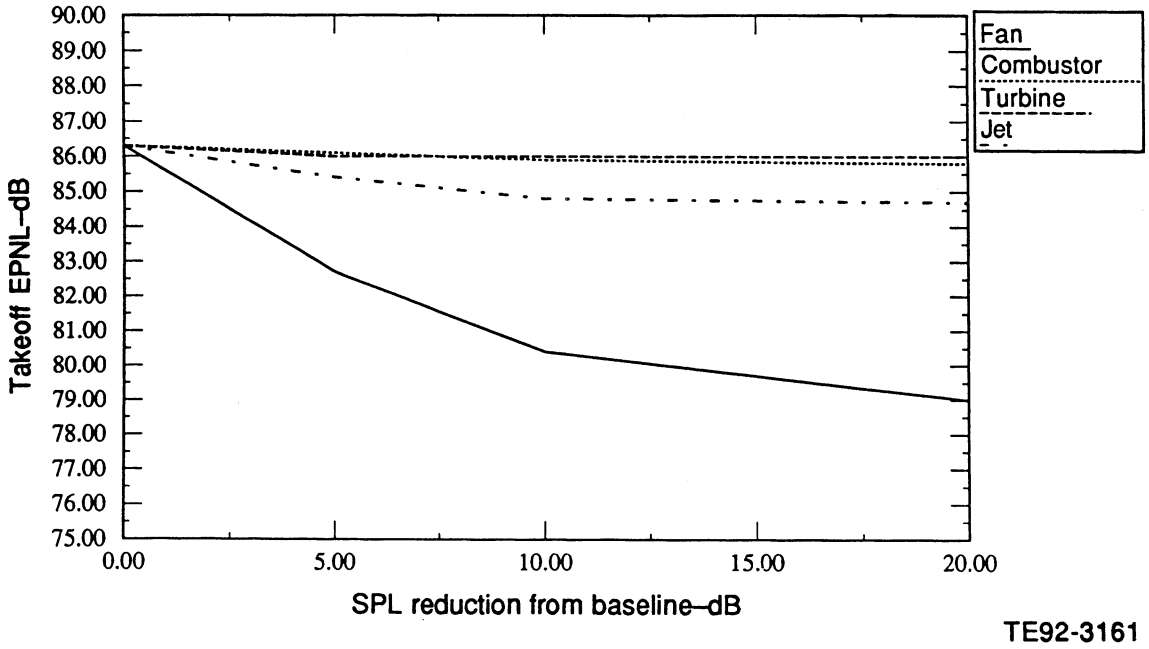

Figure 8 Component noise attenuation impact on takeoff EPNL.

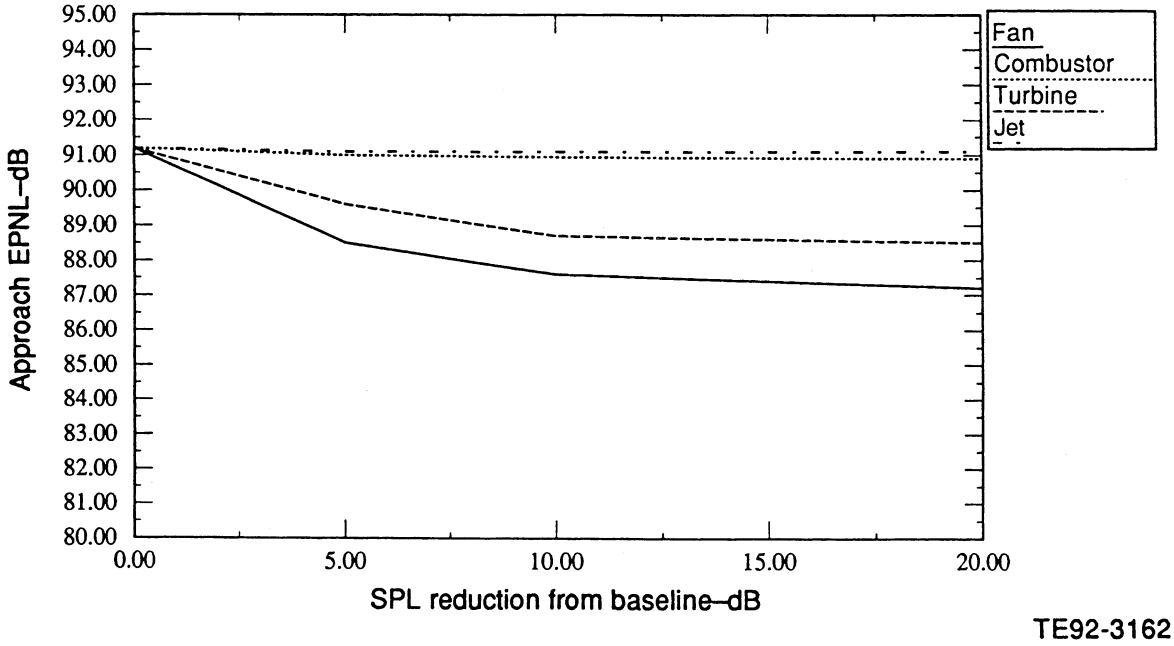

Figure 9 Component noise attenuation impact on approach EPNL.

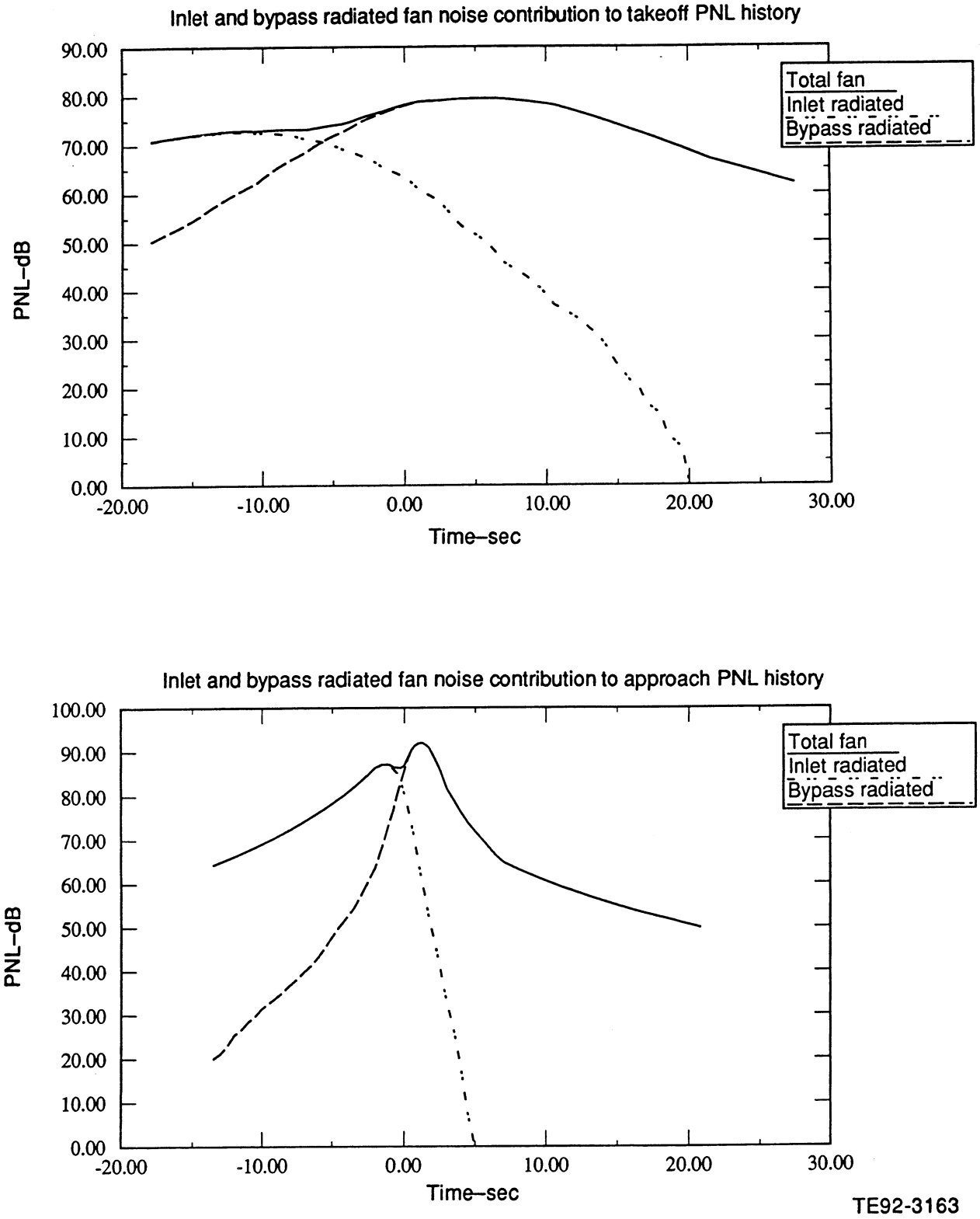

Figure 10 Contribution of fan noise radiated from inlet and bypass duct to flyover noise history.

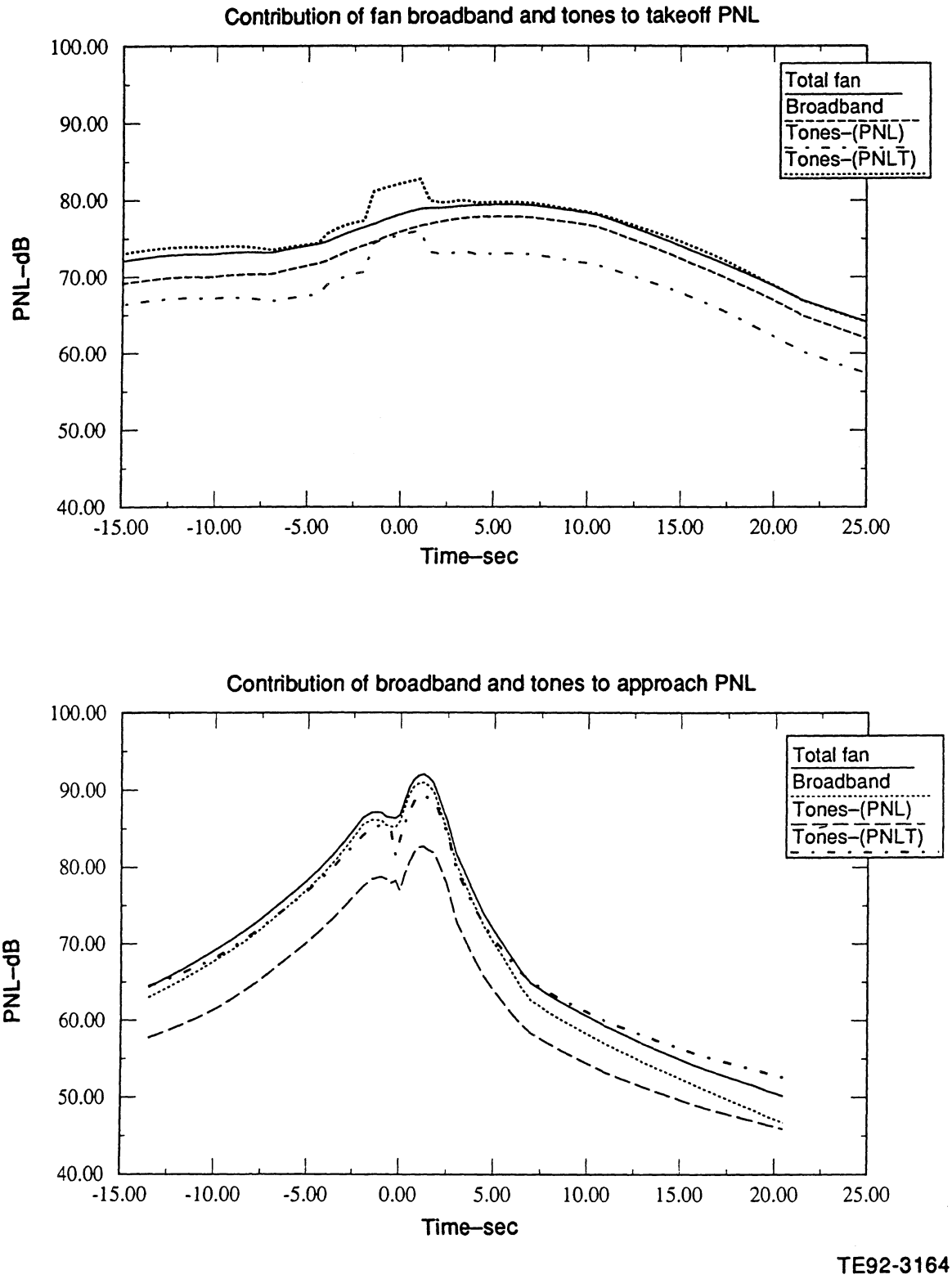

Figure 11 Contribution of broadband and tones to takeoff and approach PNL.

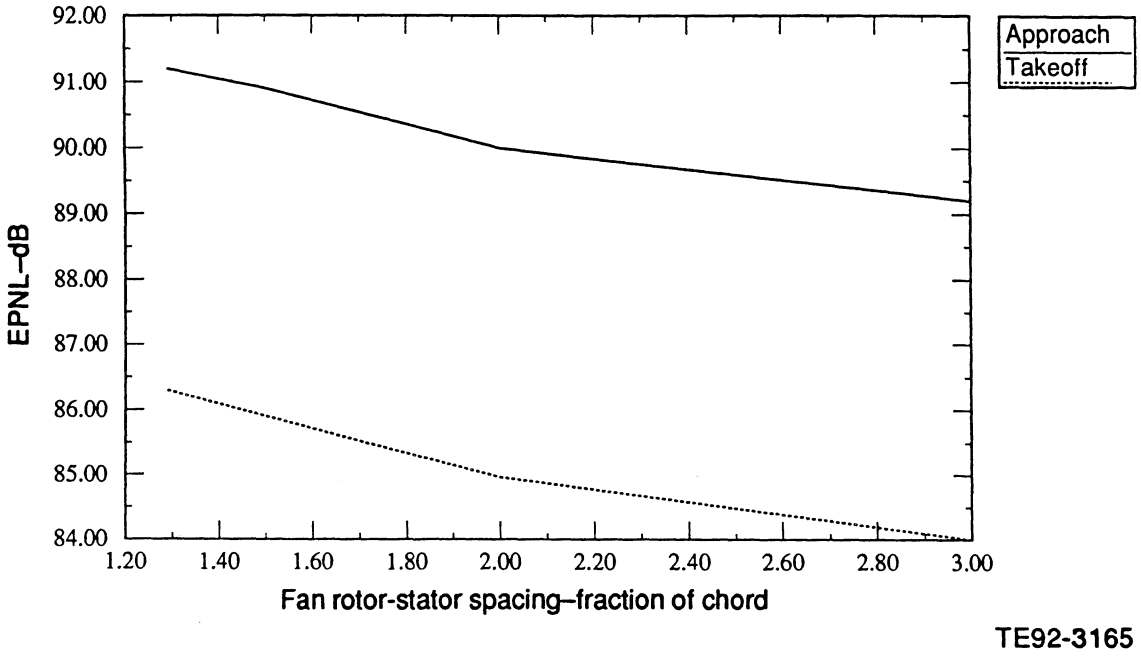

Figure 12 Effect of increasing fan rotor-stator spacing on EPNL.

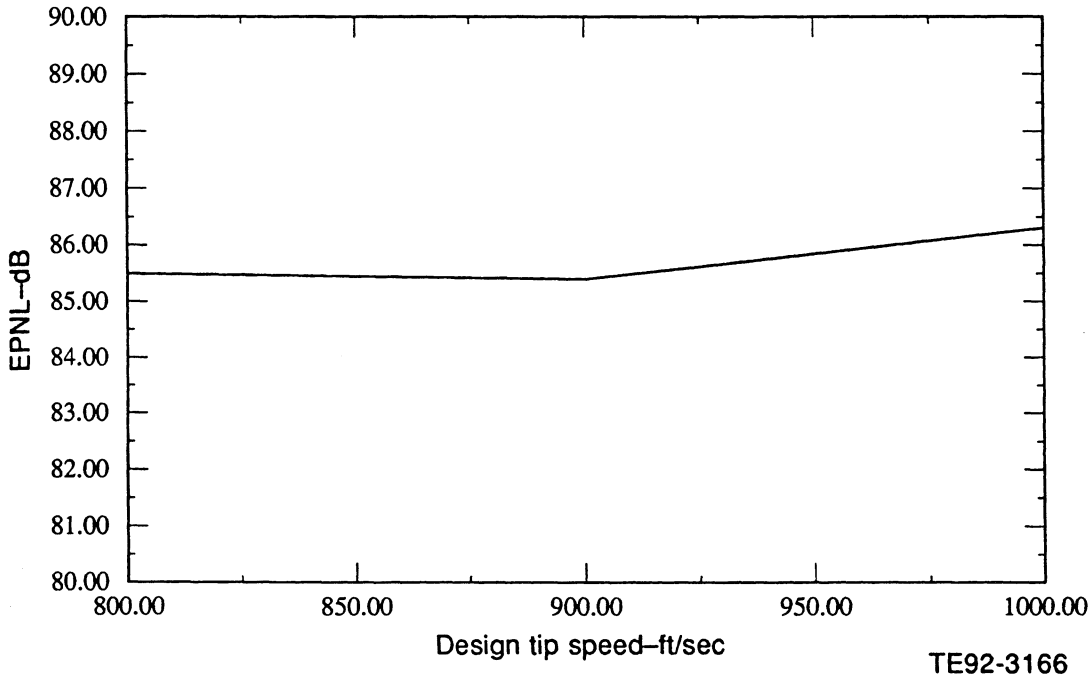

Figure 13. EPNL sensitivity to fan design tip speed.

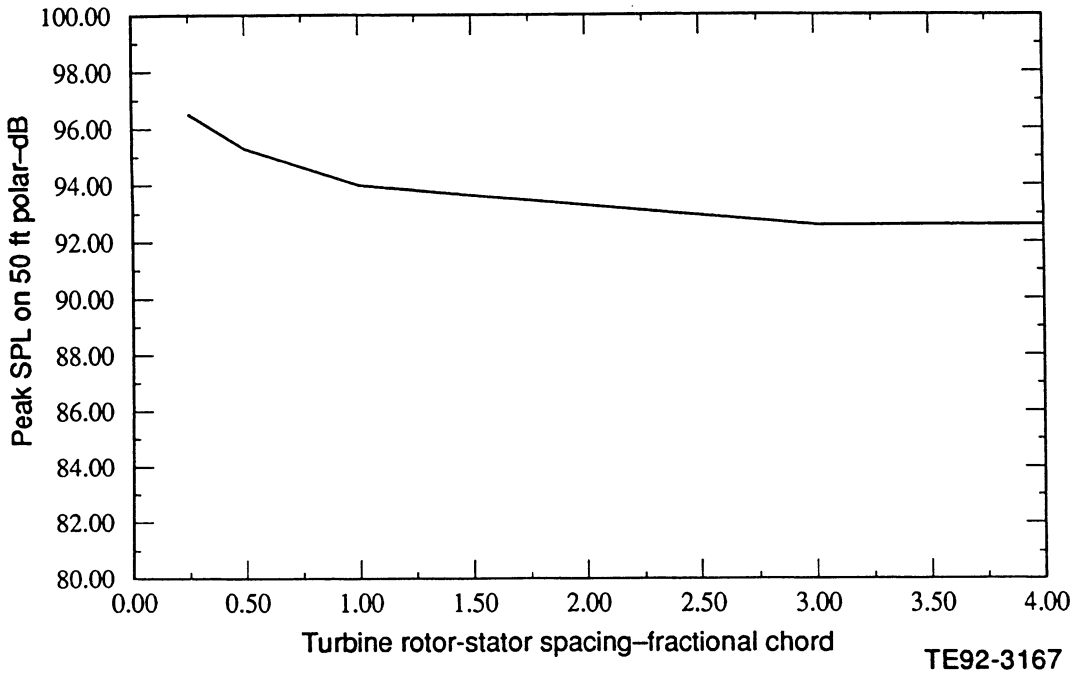

Figure 14 Impact of turbine rotor-stator spacing on approach power peak SPL.

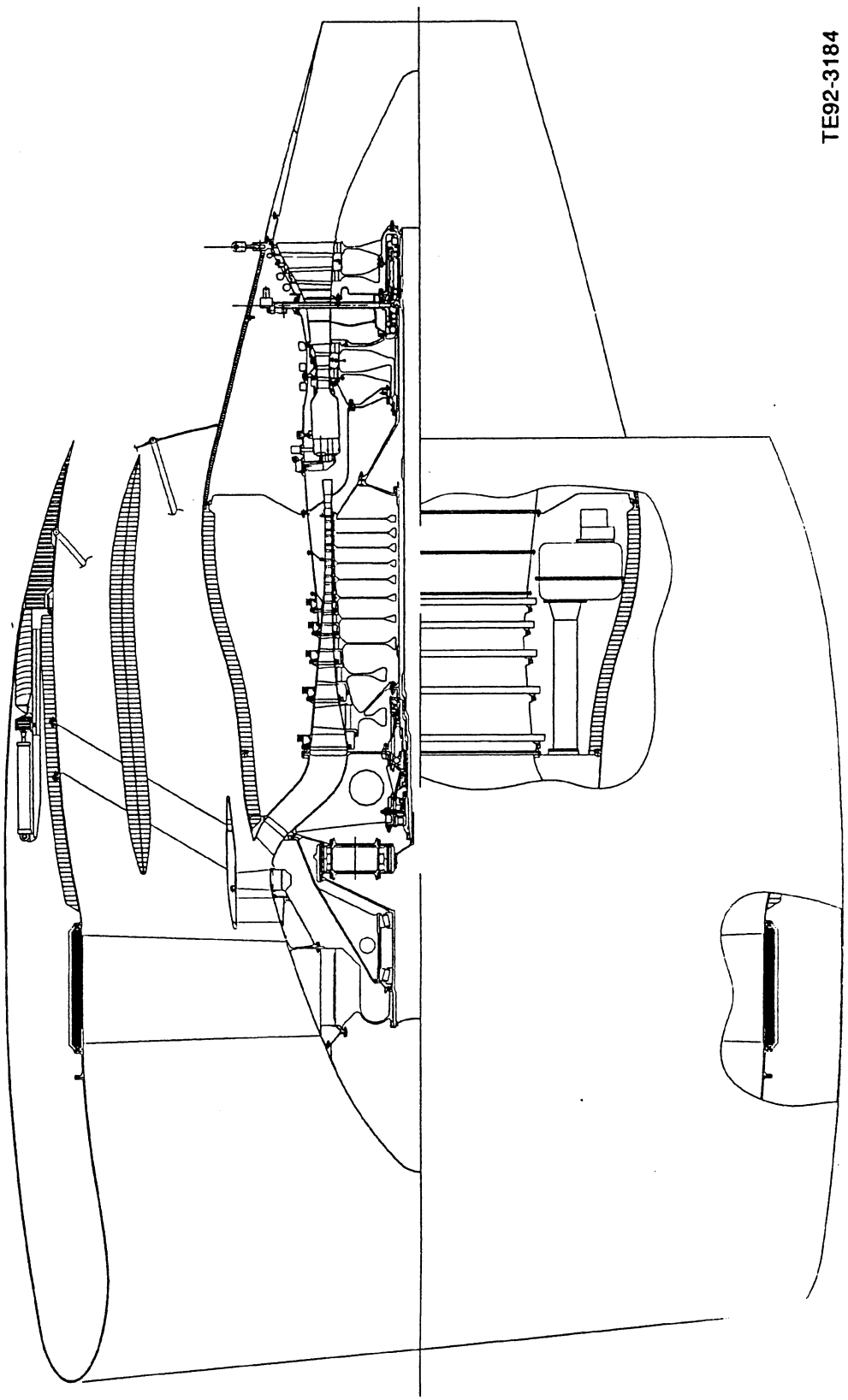

Figure 15 Revised UHBR engine included acoustic suppression.

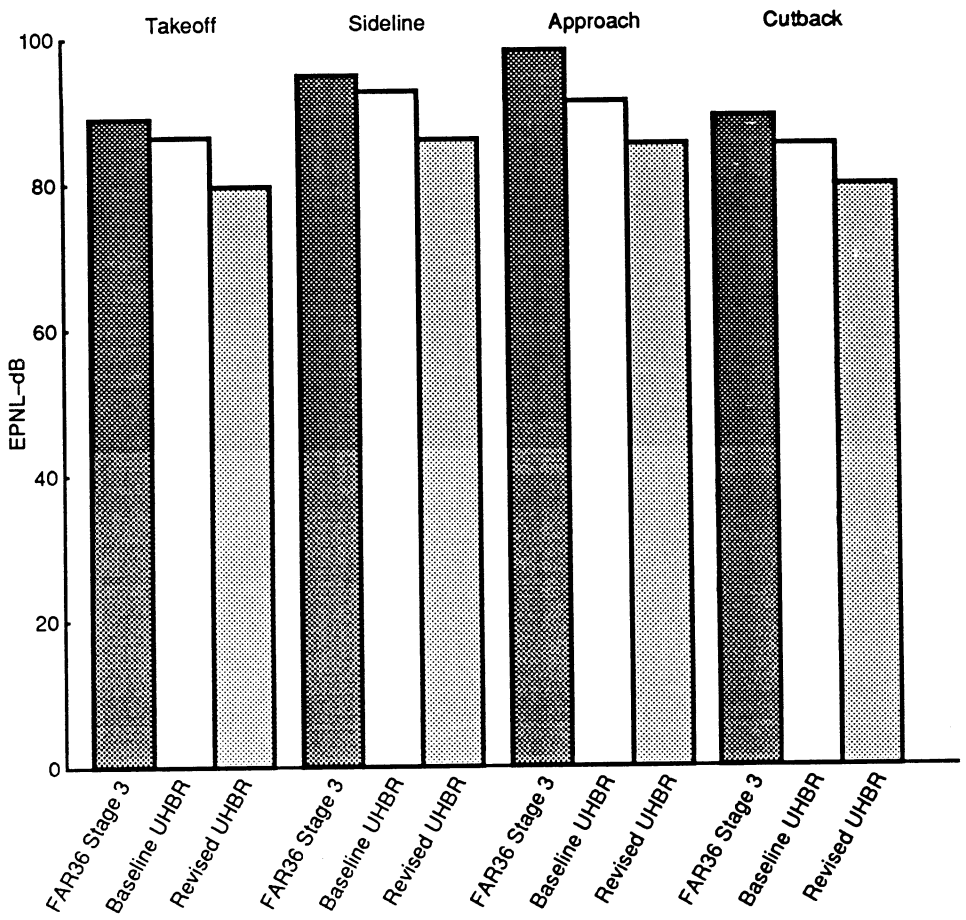

		Takeoff	Sideline	Approach	Cutback
Baseline Config.	EPNL	86.3	92.7	91.2	85.2
	FAR36 Stg 3 Margin	2.7	2.3	7.1	3.8
	Fan tip speed	850 ft/s	850 ft/s	350 ft/s	750 ft/s
	Fan pressure ratio	1.27	1.27	1.03	1.19
Revised Config.	EPNL	79.9	85.8	85.5	78.9
	FAR36 Stg 3 Margin	9.1	9.2	12.8	10.2
	Fan tip speed	850 ft/s	850 ft/s	350 ft/s	750 ft/s
	Fan pressure ratio	1.27	1.27	1.03	1.19

TE92-3185A-2

Figure 16 Comparison of far-field noise levels-baseline and revised engines.

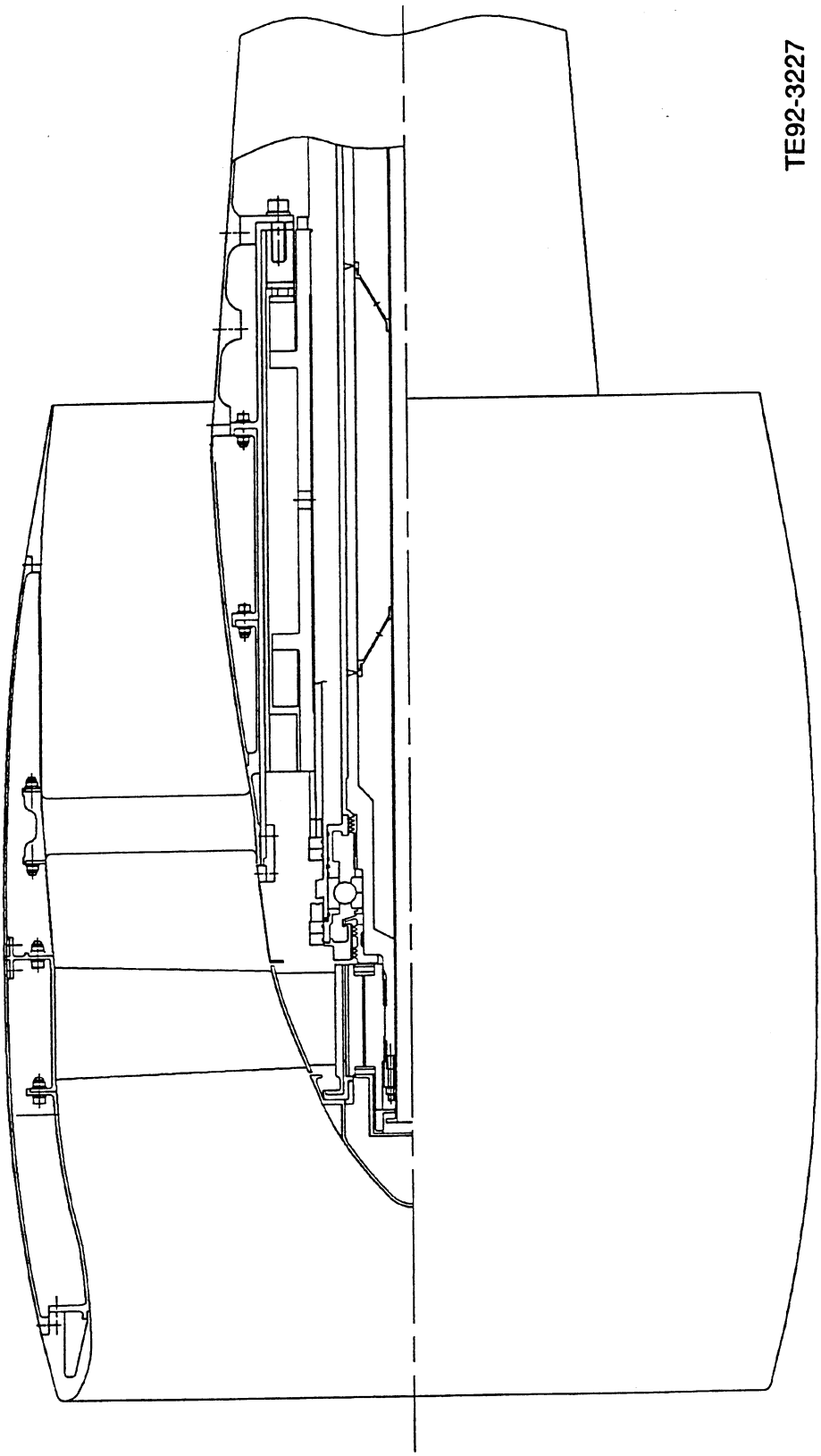

Figure 17 Adaptation of baseline fan to NASA 22 in. rig drive.

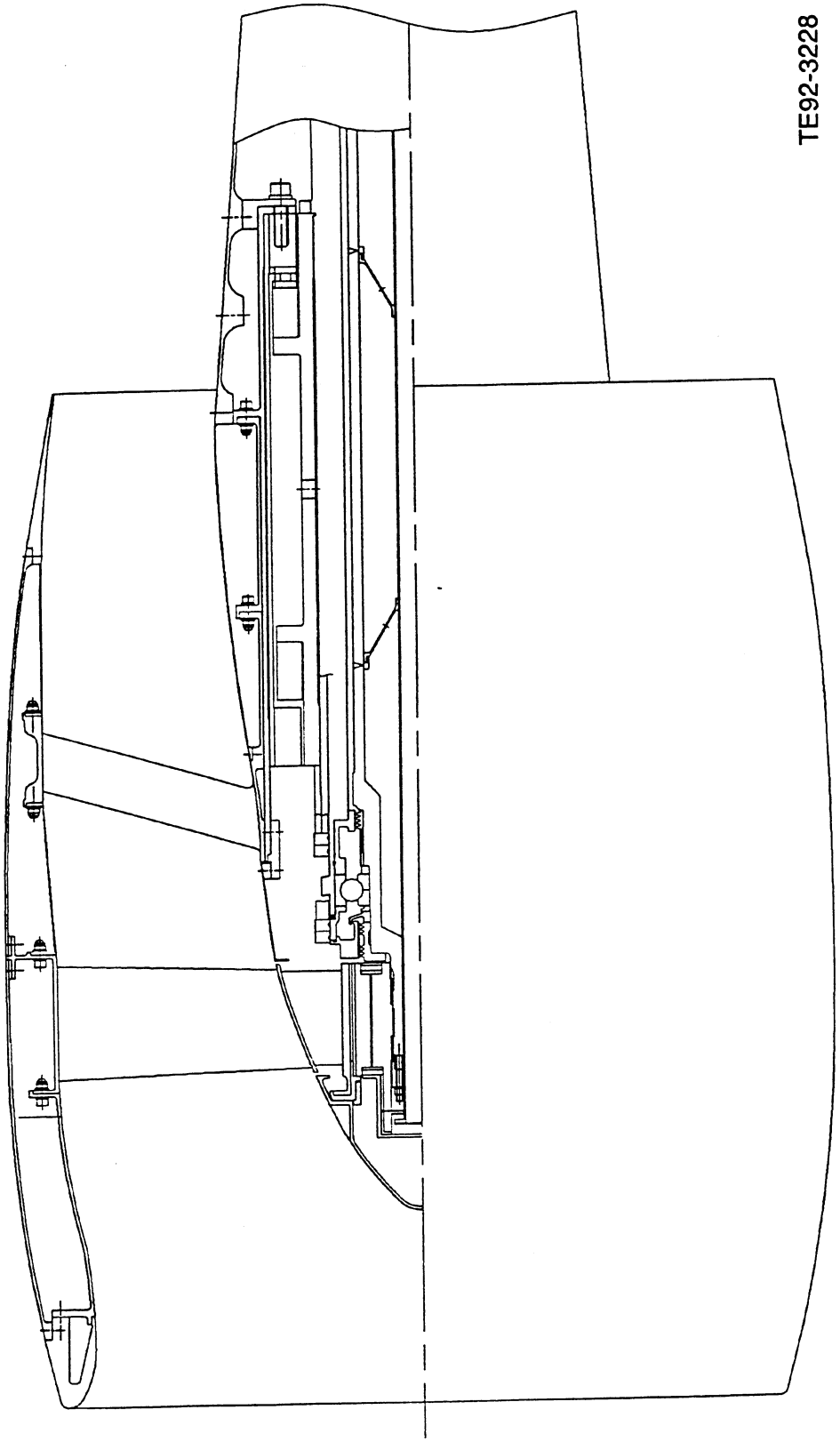

Figure 18 Baseline rotor and swept vane rig configuration.

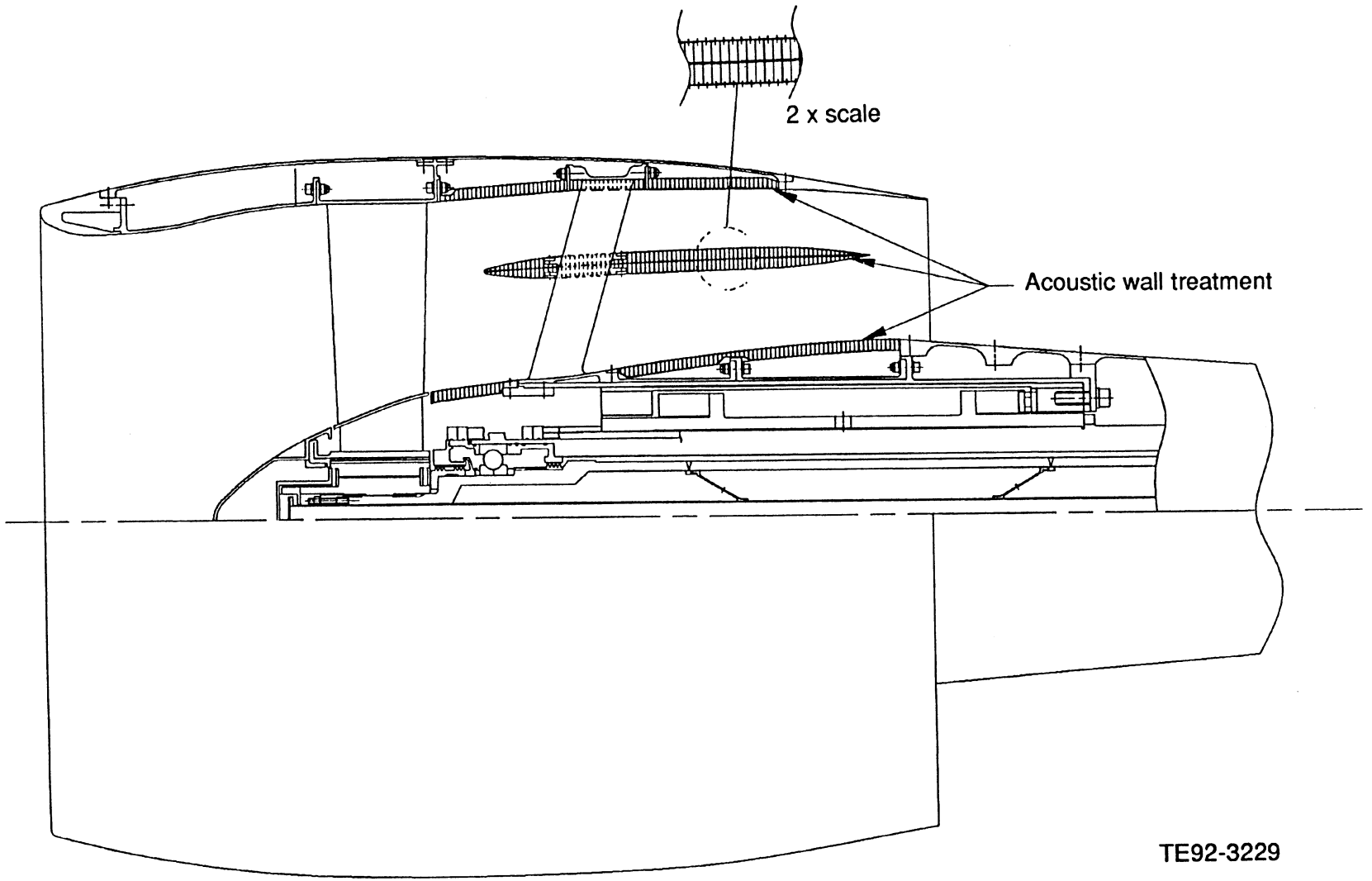

Figure 19 Adaptation of reconfigured fan with discharge duct treatment to rig.

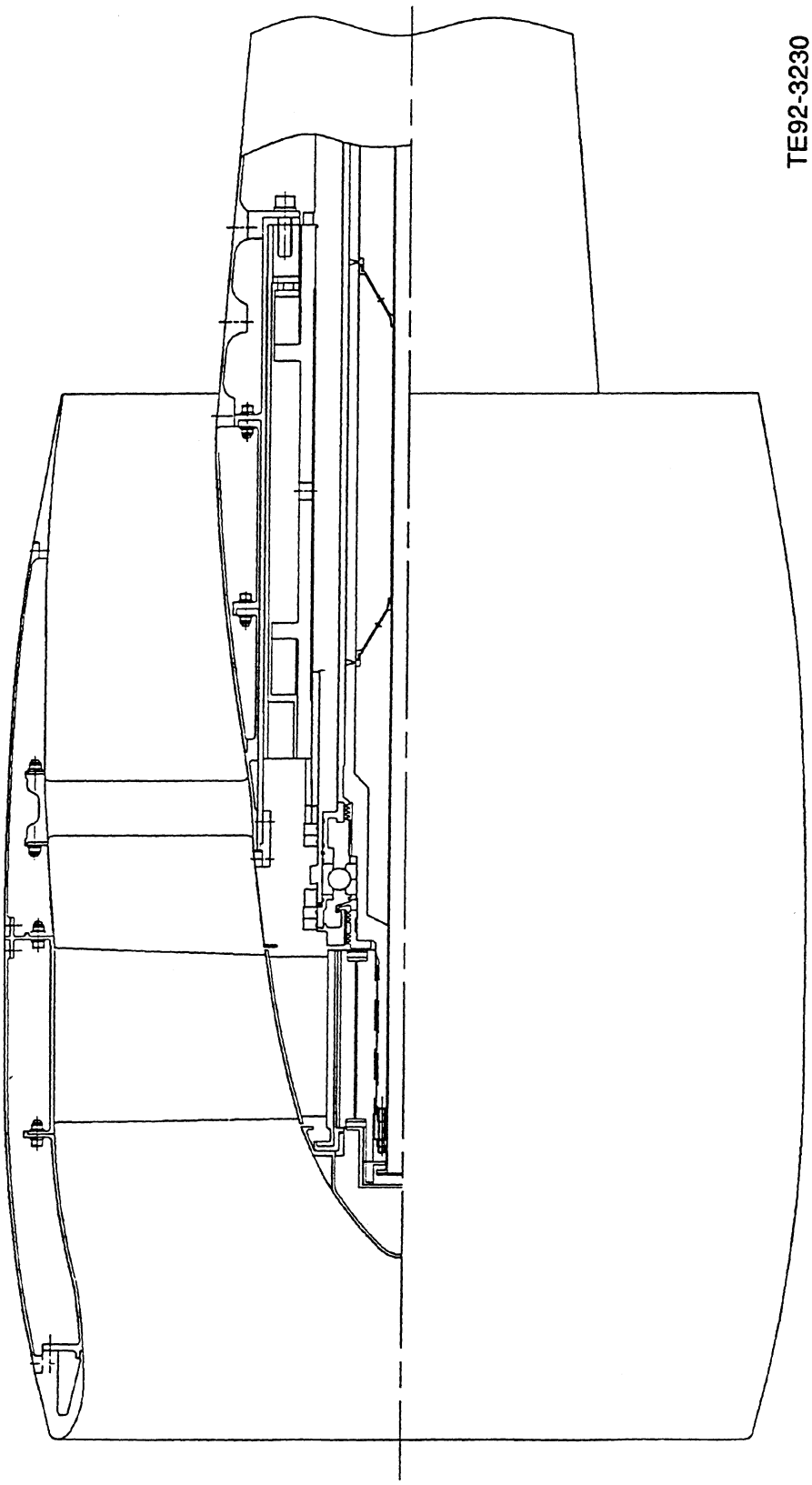

Figure 20 Increased chord/reduced airfoil count fan design for rig.

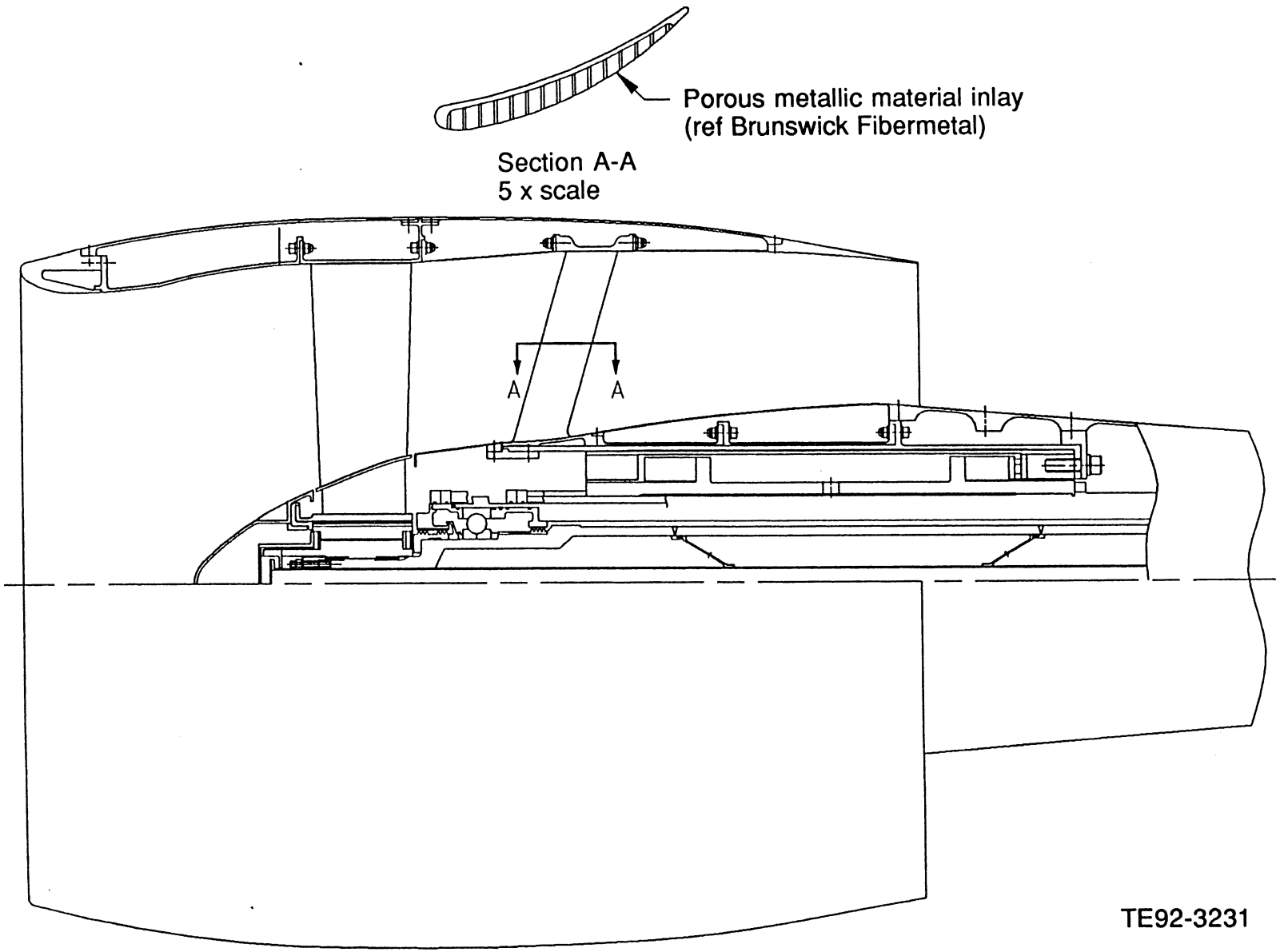

Figure 21 Baseline fan rotor and acoustically-treated vane rig configuration.

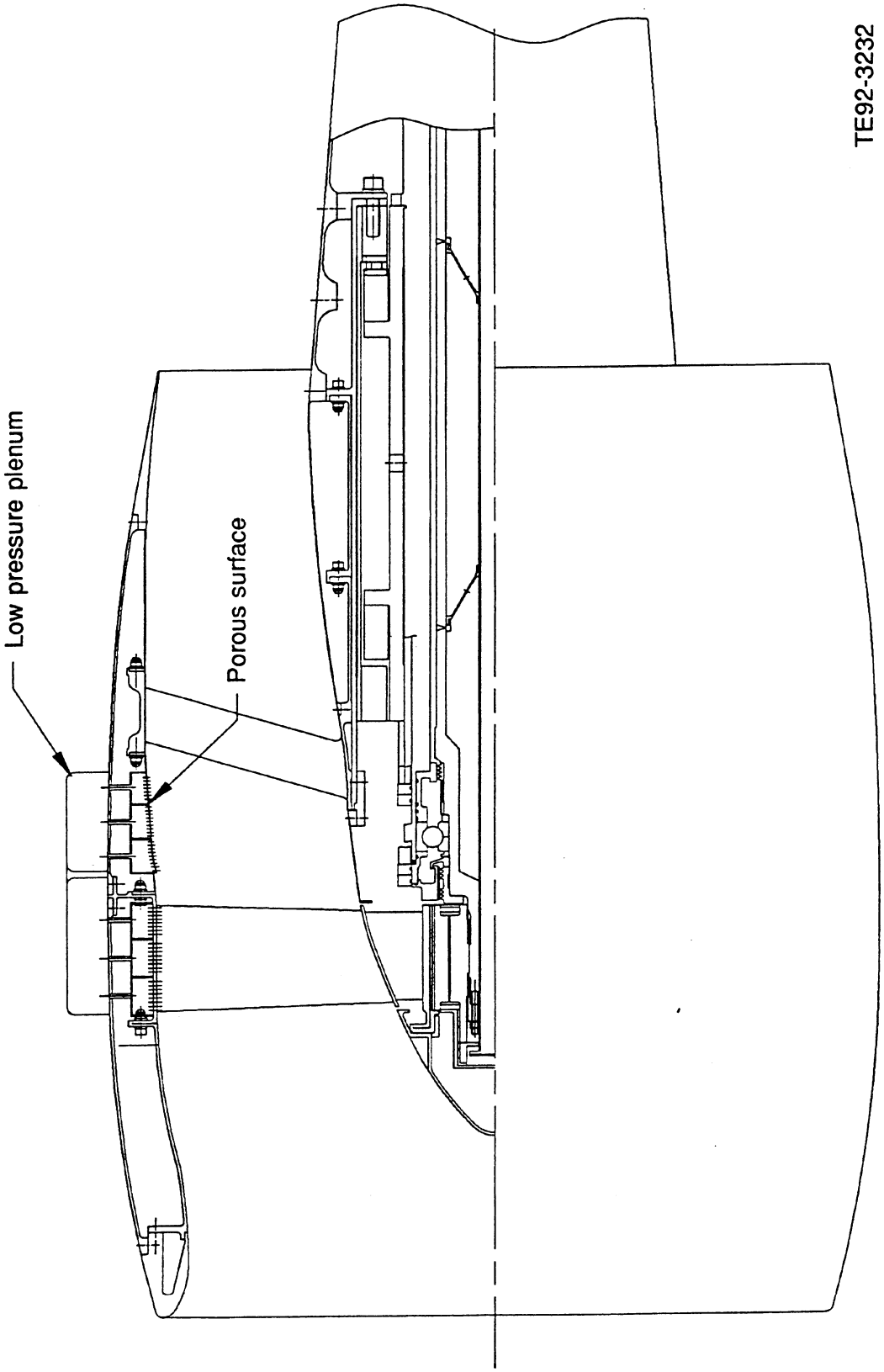

Figure 22 Modified rig flow path for tip flow removal.

III. REFERENCES

1. Heidemann, Marcus F., "Interim Prediction Method for Fan and Compressor Source Noise," NASA Technical Memorandum X-71763.

2. Tyler, J. M., and Sofrin, T. G., "Axial Flow Compressor Noise Studies," SAE Transactions, Vol 70, 1962, pp 309-332.

3. Goldstein, Marvin E., Aeroacoustics, McGraw-Hill International Book Co., 1976, p 206.

4. Envia, Edmane, "Influence of Vane Sweep on Rotor-Stator Interaction Noise," PhD dissertation submitted to University of Arizona, 1988.

5. Matthews, D. C., Nagel, R. T., and Kester, J. D., "Review of Theory and Methods for Turbine Noise Prediction," AIAA Second Aero-Acoustics Conference, March 1975.

6. Kazin, S. B. and Matta, R. K., "Turbine Noise Generation, Reduction, and Prediction," AIAA Second Aero-Acoustics Conference, 1975.

7. Kresja, E. A. and Valerino, M. F., "Interim Prediction Method for Turbine Noise," NASA TM X-73566, 1976.

8. Bilwakesh, K. R., Clapper, W. S., Emmerling, J. J., Kazi, S. B., Knott, P. R., Latham, D., Matta, R. K., Morozumi, H., "Core Engine Noise Control, Vol II," Report FAA-RD-74-125, August 1974.

9. Koch, R. L, Ciskowski, T. M., and Garzon, J. R., "Turbofan Noise Reduction Using a Near Sonic Inlet," AIAA Paper No. 74-1098, AIAA/SAE 10th Propulsion Conference, San Diego, CA, 21-23 October 1974.

10. Klujber, F., Bosch, J. C., Demetrick, R. W., and Robb, W. L., "Investigation of Noise Suppression by Sonic Inlets for Turbofan Engines," NASA CR-121126, Vol 1, Program Summary, Boeing Commercial Airplane Company, D6-40855, July 1973.

11. Minner, G. L. and Rice, E. J., "Computer Method for Design of Acoustic Liners for Turbofan Engines," NASA TM X-3317, October 1976.

12. Silcox, R. J. and Elliott, S. J., "Active Control of Multi-Dimensional Random Sound in Ducts," NASA TM 102653, May 1990.

Appendix A

Identification of blade row locations in fan design printout

Station No.	Description
18	Fan rotor inlet
19	Fan rotor exit
21	Boost stage vane inlet
22	Boost stage vane exit
23	Boost stage rotor inlet
24	Boost stage rotor exit
26	Core guide vane inlet
27	Core guide vane exit
46	Bypass vane inlet
47	Bypass vane exit

7 AUG 91 LOW NOISE FAN STUDY. BPR = 14:1, RC = 1.382, WAC = 1036.9

16:20:15 91/219

STATION NUMBER	PASSAGE TYPE	HUB AXIAL COOR.	HUB RADIUS	HUB BLOCKAGE FACTOR	TIP AXIAL COOR.	TIP RADIUS	TIP BLOCKAGE FACTOR	FLOW RATE
1	ANNULUS	-35.294	2.800	1.0000	-35.294	35.506	1.0000	1036.90
2	ANNULUS	-33.738	2.800	1.0000	-33.738	35.506	1.0000	
3	ANNULUS	-32.182	2.800	1.0000	-32.182	35.506	1.0000	
4	ANNULUS	-30.626	2.800	1.0000	-30.626	35.506	1.0000	
5	ANNULUS	-29.070	2.800	1.0000	-29.070	35.506	1.0000	
6	ANNULUS	-27.514	2.800	1.0000	-27.514	35.506	1.0000	
7	ANNULUS	-25.958	2.800	1.0000	-25.958	35.506	1.0000	
8	ANNULUS	-24.402	2.800	1.0000	-24.402	35.506	1.0000	
9	ANNULUS	-22.846	2.900	1.0000	-22.846	35.506	1.0000	
10	ANNULUS	-21.290	3.080	1.0000	-21.290	35.506	1.0000	
11	ANNULUS	-19.734	3.350	1.0000	-19.734	35.506	1.0000	
12	ANNULUS	-18.178	3.700	1.0000	-18.178	35.506	1.0000	
13	ANNULUS	-16.622	4.200	1.0000	-16.622	35.506	1.0000	
14	ANNULUS	-15.066	4.800	1.0000	-15.066	35.506	1.0000	
15	ANNULUS	-12.000	6.540	1.0000	-12.000	35.506	1.0000	
16	ANNULUS	-9.000	8.240	1.0000	-9.000	35.506	1.0000	
17	ANNULUS	-6.400	9.600	1.0000	-6.400	35.506	1.0000	
18	ANNULUS	-4.324	10.646	1.0000	-5.108	35.506	1.0000	
19	ROTOR	5.525	14.200	0.0777	6.287	35.506	0.1022	
20	ANNULUS	6.600	14.540	0.0802	6.600	35.506	0.0883	
21	ANNULUS	7.587	14.850	0.0655	7.609	19.230	1.0000	129.60
22	STATOR	10.138	15.510	0.0564	10.116	19.760	0.0115	
23	ANNULUS	10.955	15.640	0.0454	11.170	19.810	0.0135	
24	ROTOR	13.115	15.730	0.0668	12.769	19.600	0.0228	
25	ANNULUS	13.700	15.600	0.0000	14.600	19.210	0.0000	
26	ANNULUS	14.400	15.440	0.0000	16.200	18.750	0.0000	
27	STATOR	16.800	14.000	0.0000	18.400	17.750	0.0000	
28	ANNULUS	17.148	13.750	0.0000	19.600	17.000	0.0000	
29	ANNULUS	18.079	12.679	0.0000	20.800	16.200	0.0000	
30	ANNULUS	19.040	11.499	0.0000	22.000	15.420	0.0000	
31	ANNULUS	20.055	10.300	0.0000	23.200	14.700	0.0000	
32	ANNULUS	21.309	9.034	0.0000	24.100	14.300	0.0000	
33	ANNULUS	22.812	8.015	0.0000	25.000	14.080	0.0000	
34	ANNULUS	24.824	7.493	0.0000	25.500	14.000	0.0000	
35	ANNULUS	26.452	7.483	0.0000	26.452	13.980	0.0000	
36	ANNULUS	28.008	7.483	0.0000	28.008	13.960	0.0000	
37	ANNULUS	29.564	7.483	0.0000	29.564	13.960	0.0000	
38	ANNULUS	31.120	7.483	0.0000	31.120	13.960	0.0000	
39	ANNULUS	32.676	7.483	0.0000	32.676	13.960	0.0000	
40	ANNULUS	34.232	7.483	0.0000	34.232	13.960	0.0000	
41	ANNULUS	7.608	19.820	1.0000	7.608	35.506	0.0865	907.30
42	ANNULUS	9.706	20.500	0.0106	9.706	35.506	0.0895	
43	ANNULUS	11.816	20.500	0.0255	11.816	35.506	0.0903	
44	ANNULUS	13.926	20.500	0.0356	13.926	35.506	0.0942	
45	ANNULUS	17.000	20.500	0.0356	17.000	35.506	0.0942	
46	ANNULUS	19.600	20.500	0.0356	19.600	35.506	0.0942	
47	STATOR	25.000	21.000	0.0400	25.000	36.506	0.0913	
48	ANNULUS	27.678	21.000	0.0400	27.679	35.506	0.0825	
49	ANNULUS	30.500	21.000	0.0400	30.500	35.506	0.0825	
50	ANNULUS	32.500	21.000	0.0400	32.500	35.506	0.0825	
51	ANNULUS	34.500	21.000	0.0400	34.500	35.506	0.0825	
52	ANNULUS	36.500	21.000	0.0400	36.500	35.506	0.0825	
53	ANNULUS	38.500	21.000	0.0400	38.500	35.506	0.0825	
54	ANNULUS	40.500	21.000	0.0400	40.500	35.506	0.0825	

```
**********************************************************************************************************************************
**********************************************************************************************************************************

ROTOR  1   STATION 19   TIP SPEED 1000.0 FT/SEC  RPM   3227.5   HUB 14.20    TIP 35.51  DCA          CLEARANCE 0.000


DESIGN PROCEDURE NO.  2 USED
     LOSS SET NO.  1 IS USED

     OBLIQUE SHOCK LOSS MODEL USED FOR THIS AIRFOIL
     AXIAL STACK TABLE HAS BEEN SPECIFIED
     TANG. STACK TABLE HAS BEEN SPECIFIED

     STAGE RC (STREAMLINE  1.1800 1.2020 1.2350 1.2720 1.3100 1.3480 1.3850 1.4220 1.4610 1.4760 1.4780 1.4740 1.4500

     RADIUS        INCHES   14.200 16.331 18.461 20.592 22.722 24.853 26.983 29.114 31.245 32.310 33.375 34.440 35.506


     THICKNESS/CHORD        0.0850 0.0300
     RADIUS        INCHES   12.500 35.550

     CHORD                 10.774015.1000
     RADIUS        INCHES   13.190 35.455

     INCIDENCE               3.50   4.80   4.72   4.68   4.75   5.55   5.65   5.73   5.66   4.95   5.00
     RADIUS        INCHES   11.984 16.444 17.382 20.140 20.827 23.202 24.666 25.133 28.217 31.652 34.944

     RADIAL BLOCKAGE         0.99


STATOR  1  STATION 22                                                HUB 15.51    TIP 19.76  DCA          CLEARANCE 0.000

DESIGN PROCEDURE NO.  2 USED
     LOSS SET NO. 40 IS USED
     AXIAL STACK TABLE HAS BEEN SPECIFIED
     TANG. STACK TABLE HAS BEEN SPECIFIED

     ABSOLUTE FLOW ANGLE    -3.00   0.00
     RADIUS        INCHES   15.550 19.800

     SHOCK LOSS             0.0000

     THICKNESS/CHORD        0.0487 0.0598 0.0621
     RADIUS        INCHES   16.896 20.168 22.130

     CHORD                  2.6864 2.6906 2.6568
     RADIUS        INCHES   16.896 20.168 22.130

     RADIAL BLOCKAGE         0.99

**********************************************************************************************************************************
**********************************************************************************************************************************

ROTOR  2   STATION 24   TIP SPEED    0.0 FT/SEC  RPM      0.0   HUB 15.73    TIP 19.60  DCA          CLEARANCE 0.000


DESIGN PROCEDURE NO.  2 USED
     LOSS SET NO.  1 IS USED
     AXIAL STACK TABLE HAS BEEN SPECIFIED
     TANG. STACK TABLE HAS BEEN SPECIFIED

     TOTAL PRESSURE          20.32

     SHOCK LOSS             0.0000

     THICKNESS/CHORD        0.0811 0.0572 0.0490
     RADIUS        INCHES   17.517 20.428 22.222

     CHORD                  2.3741 2.2036 2.1100
```

```
      RADIUS        INCHES    17.517 20.428 22.222
      RADIAL BLOCKAGE           0.99

   STATOR  2  STATION 27                    HUB 14.00    TIP 17.75  DCA          CLEARANCE 0.000

   DESIGN PROCEDURE NO.  2 USED
        LOSS SET NO. 40 IS USED
        AXIAL STACK TABLE HAS BEEN SPECIFIED
        TANG. STACK TABLE HAS BEEN SPECIFIED
      ABSOLUTE FLOW ANGLE       0.00
      SHOCK LOSS               0.0000
      THICKNESS/CHORD          0.0487 0.0598 0.0621
      RADIUS        INCHES     16.896 20.168 22.130
      CHORD                    2.3340

   STATOR  3  STATION 47                    HUB 21.00    TIP 36.51  DCA          CLEARANCE 0.000

   DESIGN PROCEDURE NO.  2 USED
        LOSS SET NO. 40 IS USED
        AXIAL STACK TABLE HAS BEEN SPECIFIED
        TANG. STACK TABLE HAS BEEN SPECIFIED
      ABSOLUTE FLOW ANGLE       0.00
      SHOCK LOSS               0.0000
      THICKNESS/CHORD          0.0581 0.0624 0.0723
      RADIUS        INCHES     23.292 25.801 34.139
      CHORD                    6.5000
      RADIAL BLOCKAGE           0.99
      INLET TOTAL PRESSURE     14.70
      INLET TOTAL TEMP         518.67
STATION 18
      RADIAL BLOCKAGE          0.9900
STATION 20
      RADIAL BLOCKAGE          0.9900
STATION 23
      RADIAL BLOCKAGE          0.9900
STATION 26
      RADIAL BLOCKAGE          0.9900
STATION 41
      RADIAL BLOCKAGE          0.9900
STATION 42
      RADIAL BLOCKAGE          0.9900
STATION 43
      RADIAL BLOCKAGE          0.9900
```

```
TATION 44

      RADIAL BLOCKAGE        0.9900

TATION 45

      RADIAL BLOCKAGE        0.9900

TATION 46

      RADIAL BLOCKAGE        0.9900
HIS RUN HAD279K UNUSED BYTES

  TOTAL CPU TIME AFTER INPUT        0.1
  TIME DIFFERENCE       13.0                                                    135
IRST UNCONVERGED SECTION AT STATION 19 AND STREAMLINE  1
IRFOIL FINISHED
IRFOIL FINISHED
IRFOIL FINISHED
IRFOIL FINISHED
IRFOIL FINISHED
  TIME 14.8
  TIME 14.9
  TIME DIFFERENCE       11.7                                                    122
IRFOIL FINISHED
IRFOIL FINISHED
IRFOIL FINISHED
IRFOIL FINISHED
IRFOIL FINISHED
  TIME 27.0
  TIME 27.1

  TOTAL CPU TIME AFTER CALC       27.1
*** ATTENTION ***  FOR YOUR INFORMATION THE STRATFORD BOUNDARY LAYER CALCULATION TERMINATED AFTER 50 ITERATIONS
```

7 AUG 91 LOW NOISE FAN STUDY. BPR = 14:1, RC = 1.382, WAC = 1036.9 INTERSTAGE DATA
STATION NO. 1 PAGE 1
ANNULUS EXIT 1 16:20:15 91/219 COPY 1 OF 1

MASS FLOW RATE 1036.90 FLOW RATE/SQ. FT. 37.94 (CORRECTED) MASS AVE. TOTAL PRESSURE 14.70
CORRECTED FLOW RATE 1036.90 ANNULUS AREA 27.33 SQ. FT =3935.8 SQ.IN MASS AVE. TOTAL TEMPERATURE 518.7

RADIUS INCHES	AXIAL VELOCITY	WHIRL VELOCITY	RADIAL VELOCITY	TOTAL PRESSURE	STATIC PRESSURE	TEMPERATURES TOTAL	TEMPERATURES STATIC	ABSOLUTE VELOCITY	ABSOLUTE MACH NO.	MER. VELOCITY	PERCENT SPAN	S.L. NO.
2.802	565.9	0.0	0.00	14.70	12.22	518.7	492.0	565.9	0.520	565.9	0.0	1
6.075	565.9	0.0	0.00	14.70	12.22	518.7	492.0	565.9	0.520	565.9	10.0	3
8.122	565.9	0.0	0.00	14.70	12.22	518.7	492.0	565.9	0.520	565.9	16.3	5
9.748	565.9	0.0	0.00	14.70	12.22	518.7	492.0	565.9	0.520	565.9	21.2	7
12.823	565.9	0.0	0.00	14.70	12.22	518.7	492.0	565.9	0.520	565.9	30.6	9
15.237	565.9	0.0	0.00	14.70	12.22	518.7	492.0	565.9	0.520	565.9	38.0	11
17.341	565.9	0.0	0.00	14.70	12.22	518.7	492.0	565.9	0.520	565.9	44.5	13
19.217	565.9	0.0	0.00	14.70	12.22	518.7	492.0	565.9	0.520	565.9	50.2	15
20.925	565.9	0.0	0.00	14.70	12.22	518.7	492.0	565.9	0.520	565.9	55.4	17
22.504	565.9	0.0	0.00	14.70	12.22	518.7	492.0	565.9	0.520	565.9	60.2	19
23.979	565.9	0.0	0.00	14.70	12.22	518.7	492.0	565.9	0.520	565.9	64.8	21
25.368	565.9	0.0	0.00	14.70	12.22	518.7	492.0	565.9	0.520	565.9	69.0	23
26.685	565.9	0.0	0.00	14.70	12.22	518.7	492.0	565.9	0.520	565.9	73.0	25
27.941	565.9	0.0	0.00	14.70	12.22	518.7	492.0	565.9	0.520	565.9	76.9	27
29.142	565.9	0.0	0.00	14.70	12.22	518.7	492.0	565.9	0.520	565.9	80.5	29
30.295	565.9	0.0	0.00	14.70	12.22	518.7	492.0	565.9	0.520	565.9	84.1	31
31.407	565.9	0.0	0.00	14.70	12.22	518.7	492.0	565.9	0.520	565.9	87.5	33
32.480	565.9	0.0	0.00	14.70	12.22	518.7	492.0	565.9	0.520	565.9	90.7	35
33.519	565.9	0.0	0.00	14.70	12.22	518.7	492.0	565.9	0.520	565.9	93.9	37
34.526	565.9	0.0	0.00	14.70	12.22	518.7	492.0	565.9	0.520	565.9	97.0	39
35.505	565.9	0.0	0.00	14.70	12.22	518.7	492.0	565.9	0.520	565.9	100.0	41

7 AUG 91 LOW NOISE FAN STUDY. BPR = 14:1, RC = 1.382, WAC = 1036.9 INTERSTAGE DATA
STATION NO. 2 PAGE 2
ANNULUS EXIT 2 16:20:15 91/219 COPY 1 OF 1

MASS FLOW RATE 1036.90 FLOW RATE/SQ. FT. 37.94 (CORRECTED) MASS AVE. TOTAL PRESSURE 14.70
CORRECTED FLOW RATE 1036.90 ANNULUS AREA 27.33 SQ. FT =3935.5 SQ.IN MASS AVE. TOTAL TEMPERATURE 518.7

RADIUS INCHES	AXIAL VELOCITY	WHIRL VELOCITY	RADIAL VELOCITY	TOTAL PRESSURE	STATIC PRESSURE	TEMPERATURES TOTAL	TEMPERATURES STATIC	ABSOLUTE VELOCITY	ABSOLUTE MACH NO.	MER. VELOCITY	PERCENT SPAN	S.L. NO.
2.809	539.0	0.0	1.65	14.70	12.43	518.7	494.5	539.0	0.494	539.0	0.0	1
6.160	541.9	0.0	6.93	14.70	12.41	518.7	494.2	541.9	0.497	541.9	10.3	3
8.240	544.7	0.0	9.27	14.70	12.39	518.7	493.9	544.8	0.500	544.8	16.6	5
9.886	547.3	0.0	10.66	14.70	12.37	518.7	493.7	547.4	0.502	547.4	21.7	7
12.985	552.6	0.0	12.21	14.70	12.32	518.7	493.2	552.8	0.508	552.8	31.1	9
15.405	556.9	0.0	12.54	14.70	12.29	518.7	492.8	557.0	0.512	557.0	38.5	11
17.508	560.5	0.0	12.26	14.70	12.26	518.7	492.5	560.6	0.515	560.6	45.0	13
19.377	563.4	0.0	11.63	14.70	12.24	518.7	492.2	563.5	0.518	563.5	50.7	15
21.075	565.9	0.0	10.77	14.70	12.22	518.7	492.0	566.0	0.520	566.0	55.9	17
22.641	567.9	0.0	9.79	14.70	12.20	518.7	491.8	568.0	0.522	568.0	60.7	19
24.103	569.6	0.0	8.73	14.70	12.19	518.7	491.6	569.6	0.524	569.6	65.1	21
25.478	570.9	0.0	7.63	14.70	12.18	518.7	491.5	571.0	0.525	571.0	69.3	23
26.781	572.0	0.0	6.51	14.70	12.17	518.7	491.4	572.1	0.526	572.1	73.3	25
28.022	572.9	0.0	5.38	14.70	12.16	518.7	491.3	572.9	0.527	572.9	77.1	27
29.208	573.6	0.0	4.27	14.70	12.15	518.7	491.2	573.6	0.528	573.6	80.7	29
30.348	574.0	0.0	3.18	14.70	12.15	518.7	491.2	574.0	0.528	574.0	84.2	31
31.446	574.3	0.0	2.10	14.70	12.15	518.7	491.2	574.3	0.528	574.3	87.6	33
32.507	574.4	0.0	1.05	14.70	12.15	518.7	491.2	574.4	0.529	574.4	90.8	35
33.534	574.4	0.0	0.03	14.70	12.15	518.7	491.2	574.4	0.529	574.4	94.0	37
34.531	574.2	0.0	-0.96	14.70	12.15	518.7	491.2	574.2	0.528	574.2	97.0	39
35.500	573.8	0.0	-1.93	14.70	12.15	518.7	491.2	573.8	0.528	573.8	100.0	41

7 AUG 91 LOW NOISE FAN STUDY. BPR = 14:1, RC = 1.382, WAC = 1036.9 INTERSTAGE DATA
PAGE 3
STATION NO. 3
ANNULUS EXIT 3 16:20:15 91/219 COPY 1 OF 1

MASS FLOW RATE 1036.90 FLOW RATE/SQ. FT. 37.94 (CORRECTED) MASS AVE. TOTAL PRESSURE 14.70
CORRECTED FLOW RATE 1036.90 ANNULUS AREA 27.33 SQ. FT =3935.8 SQ.IN MASS AVE. TOTAL TEMPERATURE 518.7

RADIUS INCHES	AXIAL VELOCITY	WHIRL VELOCITY	RADIAL VELOCITY	TOTAL PRESSURE	STATIC PRESSURE	TEMPERATURES TOTAL	TEMPERATURES STATIC	ABSOLUTE VELOCITY	ABSOLUTE MACH NO.	MER. VELOCITY	PERCENT SPAN	S.L. NO.
2.812	554.2	0.0	1.66	14.70	12.31	518.7	493.1	554.2	0.509	554.2	0.0	1
6.115	555.3	0.0	3.75	14.70	12.30	518.7	493.0	555.3	0.510	555.3	10.1	3
8.175	556.8	0.0	4.71	14.70	12.29	518.7	492.8	556.8	0.511	556.8	16.4	5
9.809	558.1	0.0	5.20	14.70	12.28	518.7	492.7	558.1	0.513	558.1	21.4	7
12.892	560.7	0.0	5.54	14.70	12.26	518.7	492.5	560.7	0.515	560.7	30.9	9
15.307	562.6	0.0	5.41	14.70	12.24	518.7	492.3	562.6	0.517	562.6	38.2	11
17.409	564.1	0.0	5.09	14.70	12.23	518.7	492.1	564.1	0.519	564.1	44.7	13
19.281	565.3	0.0	4.68	14.70	12.22	518.7	492.0	565.3	0.520	565.3	50.4	15
20.984	566.3	0.0	4.23	14.70	12.21	518.7	491.9	566.3	0.521	566.3	55.6	17
22.557	567.0	0.0	3.77	14.70	12.21	518.7	491.9	567.1	0.521	567.1	60.4	19
24.027	567.7	0.0	3.31	14.70	12.20	518.7	491.8	567.7	0.522	567.7	64.9	21
25.410	568.2	0.0	2.85	14.70	12.20	518.7	491.8	568.2	0.523	568.2	69.1	23
26.721	568.7	0.0	2.39	14.70	12.20	518.7	491.7	568.7	0.523	568.7	73.1	25
27.970	569.0	0.0	1.93	14.70	12.19	518.7	491.7	569.0	0.523	569.0	77.0	27
29.165	569.3	0.0	1.48	14.70	12.19	518.7	491.7	569.3	0.524	569.3	80.6	29
30.313	569.6	0.0	1.03	14.70	12.19	518.7	491.6	569.6	0.524	569.6	84.1	31
31.418	569.8	0.0	0.57	14.70	12.19	518.7	491.6	569.8	0.524	569.8	87.5	33
32.486	570.0	0.0	0.10	14.70	12.18	518.7	491.6	570.0	0.524	570.0	90.8	35
33.519	570.1	0.0	-0.40	14.70	12.18	518.7	491.6	570.1	0.524	570.1	93.9	37
34.521	570.3	0.0	-0.95	14.70	12.18	518.7	491.6	570.3	0.525	570.3	97.0	39
35.495	570.4	0.0	-1.54	14.70	12.18	518.7	491.6	570.4	0.525	570.4	100.0	41

7 AUG 91 LOW NOISE FAN STUDY. BPR = 14:1, RC = 1.382, WAC = 1036.9 INTERSTAGE DATA
STATION NO. 4 PAGE 4
ANNULUS EXIT 4 16:20:15 91/219 COPY 1 OF 1

MASS FLOW RATE 1036.90 FLOW RATE/SQ. FT. 37.94 (CORRECTED) MASS AVE. TOTAL PRESSURE 14.70
CORRECTED FLOW RATE 1036.90 ANNULUS AREA 27.33 SQ. FT =3935.4 SQ.IN MASS AVE. TOTAL TEMPERATURE 518.7

RADIUS INCHES	AXIAL VELOCITY	WHIRL VELOCITY	RADIAL VELOCITY	TOTAL PRESSURE	STATIC PRESSURE	TEMPERATURES TOTAL	TEMPERATURES STATIC	ABSOLUTE VELOCITY	ABSOLUTE MACH NO.	MER. VELOCITY	PERCENT SPAN	S.L. NO.
2.818	534.3	0.0	1.52	14.70	12.47	518.7	494.9	534.3	0.490	534.3	0.1	1
6.181	537.2	0.0	8.92	14.70	12.45	518.7	494.6	537.3	0.493	537.3	10.3	3
8.266	540.9	0.0	11.75	14.70	12.42	518.7	494.3	541.1	0.496	541.1	16.7	5
9.915	544.3	0.0	13.29	14.70	12.39	518.7	494.0	544.4	0.500	544.4	21.8	7
13.016	550.9	0.0	14.77	14.70	12.34	518.7	493.4	551.1	0.506	551.1	31.2	9
15.435	556.0	0.0	14.88	14.70	12.30	518.7	492.9	556.2	0.511	556.2	38.6	11
17.536	560.1	0.0	14.35	14.70	12.26	518.7	492.5	560.3	0.515	560.3	45.1	13
19.403	563.4	0.0	13.48	14.70	12.24	518.7	492.2	563.6	0.518	563.6	50.8	15
21.098	566.2	0.0	12.41	14.70	12.21	518.7	491.9	566.4	0.521	566.4	55.9	17
22.662	568.5	0.0	11.23	14.70	12.20	518.7	491.7	568.6	0.523	568.6	60.7	19
24.121	570.4	0.0	10.00	14.70	12.18	518.7	491.5	570.5	0.525	570.5	65.2	21
25.494	572.0	0.0	8.74	14.70	12.17	518.7	491.4	572.0	0.526	572.0	69.4	23
26.794	573.2	0.0	7.47	14.70	12.16	518.7	491.3	573.3	0.527	573.3	73.4	25
28.032	574.2	0.0	6.22	14.70	12.15	518.7	491.2	574.3	0.528	574.3	77.1	27
29.217	575.0	0.0	5.00	14.70	12.14	518.7	491.1	575.1	0.529	575.1	80.8	29
30.354	575.7	0.0	3.81	14.70	12.14	518.7	491.0	575.7	0.530	575.7	84.2	31
31.449	576.1	0.0	2.65	14.70	12.13	518.7	491.0	576.1	0.530	576.1	87.6	33
32.507	576.5	0.0	1.54	14.70	12.13	518.7	491.0	576.5	0.531	576.5	90.8	35
33.532	576.7	0.0	0.49	14.70	12.13	518.7	490.9	576.7	0.531	576.7	94.0	37
34.525	576.8	0.0	-0.52	14.70	12.13	518.7	490.9	576.8	0.531	576.8	97.0	39
35.491	576.9	0.0	-1.46	14.70	12.13	518.7	490.9	576.9	0.531	576.9	100.0	41

7 AUG 91 LOW NOISE FAN STUDY. BPR = 14:1, RC = 1.382, WAC = 1036.9 INTERSTAGE DATA
STATION NO. 5 PAGE 5
ANNULUS EXIT 5 16:20:15 91/219 COPY 1 OF 1

MASS FLOW RATE 1036.90 FLOW RATE/SQ. FT. 37.94 (CORRECTED) MASS AVE. TOTAL PRESSURE 14.70
CORRECTED FLOW RATE 1036.90 ANNULUS AREA 27.33 SQ. FT =3935.6 SQ.IN MASS AVE. TOTAL TEMPERATURE 518.7

RADIUS INCHES	AXIAL VELOCITY	WHIRL VELOCITY	RADIAL VELOCITY	TOTAL PRESSURE	STATIC PRESSURE	TEMPERATURES TOTAL	TEMPERATURES STATIC	ABSOLUTE VELOCITY	ABSOLUTE MACH NO.	MER. VELOCITY	PERCENT SPAN	S.L. NO.
2.821	538.4	0.0	1.71	14.70	12.44	518.7	494.5	538.4	0.494	538.4	0.1	1
6.167	542.2	0.0	8.70	14.70	12.41	518.7	494.2	542.2	0.497	542.2	10.3	3
8.243	546.1	0.0	10.86	14.70	12.38	518.7	493.8	546.2	0.501	546.2	16.6	5
9.885	549.3	0.0	11.78	14.70	12.35	518.7	493.5	549.4	0.504	549.4	21.7	7
12.976	555.1	0.0	12.22	14.70	12.30	518.7	493.0	555.3	0.510	555.3	31.1	9
15.390	559.2	0.0	11.75	14.70	12.27	518.7	492.6	559.4	0.514	559.4	38.5	11
17.489	562.4	0.0	10.94	14.70	12.25	518.7	492.3	562.5	0.517	562.5	44.9	13
19.356	564.9	0.0	10.00	14.70	12.23	518.7	492.1	565.0	0.519	565.0	50.6	15
21.052	566.9	0.0	9.01	14.70	12.21	518.7	491.9	566.9	0.521	566.9	55.8	17
22.619	568.5	0.0	8.02	14.70	12.20	518.7	491.7	568.5	0.523	568.5	60.6	19
24.081	569.8	0.0	7.04	14.70	12.19	518.7	491.6	569.8	0.524	569.8	65.1	21
25.457	570.9	0.0	6.08	14.70	12.18	518.7	491.5	570.9	0.525	570.9	69.3	23
26.762	571.7	0.0	5.15	14.70	12.17	518.7	491.4	571.8	0.526	571.8	73.3	25
28.004	572.5	0.0	4.24	14.70	12.16	518.7	491.4	572.5	0.527	572.5	77.1	27
29.192	573.0	0.0	3.37	14.70	12.16	518.7	491.3	573.1	0.527	573.1	80.7	29
30.333	573.5	0.0	2.52	14.70	12.16	518.7	491.3	573.5	0.528	573.5	84.2	31
31.432	573.9	0.0	1.69	14.70	12.15	518.7	491.2	573.9	0.528	573.9	87.5	33
32.494	574.2	0.0	0.90	14.70	12.15	518.7	491.2	574.2	0.528	574.2	90.8	35
33.522	574.4	0.0	0.13	14.70	12.15	518.7	491.2	574.4	0.529	574.4	93.9	37
34.518	574.5	0.0	-0.62	14.70	12.15	518.7	491.2	574.5	0.529	574.5	97.0	39
35.487	574.6	0.0	-1.33	14.70	12.15	518.7	491.1	574.6	0.529	574.6	99.9	41

7 AUG 91 LOW NOISE FAN STUDY. BPR = 14:1, RC = 1.382, WAC = 1036.9 INTERSTAGE DATA
STATION NO. 6 PAGE 6
ANNULUS EXIT 6 16:20:15 91/219 COPY 1 OF 1

MASS FLOW RATE 1036.90 FLOW RATE/SQ. FT. 37.94 (CORRECTED) MASS AVE. TOTAL PRESSURE 14.70
CORRECTED FLOW RATE 1036.90 ANNULUS AREA 27.33 SQ. FT =3935.1 SQ.IN MASS AVE. TOTAL TEMPERATURE 518.7

RADIUS INCHES	AXIAL VELOCITY	WHIRL VELOCITY	RADIAL VELOCITY	TOTAL PRESSURE	STATIC PRESSURE	TEMPERATURES TOTAL	TEMPERATURES STATIC	ABSOLUTE VELOCITY	ABSOLUTE MACH NO.	MER. VELOCITY	PERCENT SPAN	S.L. NO.
2.828	519.4	0.0	2.03	14.70	12.59	518.7	496.2	519.4	0.476	519.4	0.1	1
6.231	526.3	0.0	14.50	14.70	12.53	518.7	495.6	526.5	0.482	526.5	10.5	3
8.328	532.8	0.0	17.89	14.70	12.48	518.7	495.0	533.1	0.489	533.1	16.9	5
9.982	538.1	0.0	19.41	14.70	12.44	518.7	494.5	538.4	0.494	538.4	22.0	7
13.084	547.5	0.0	20.36	14.70	12.36	518.7	493.6	547.9	0.503	547.9	31.4	9
15.501	554.3	0.0	19.85	14.70	12.31	518.7	493.0	554.6	0.509	554.6	38.8	11
17.597	559.5	0.0	18.73	14.70	12.27	518.7	492.5	559.8	0.514	559.8	45.2	13
19.458	563.7	0.0	17.32	14.70	12.23	518.7	492.2	564.0	0.518	564.0	50.9	15
21.147	567.1	0.0	15.78	14.70	12.21	518.7	491.8	567.3	0.522	567.3	56.1	17
22.706	569.9	0.0	14.18	14.70	12.18	518.7	491.6	570.1	0.524	570.1	60.9	19
24.159	572.2	0.0	12.57	14.70	12.17	518.7	491.4	572.3	0.527	572.3	65.3	21
25.527	574.0	0.0	10.97	14.70	12.15	518.7	491.2	574.1	0.528	574.1	69.5	23
26.822	575.6	0.0	9.40	14.70	12.14	518.7	491.0	575.6	0.530	575.6	73.4	25
28.055	576.8	0.0	7.88	14.70	12.13	518.7	490.9	576.9	0.531	576.9	77.2	27
29.235	577.8	0.0	6.40	14.70	12.12	518.7	490.8	577.8	0.532	577.8	80.8	29
30.368	578.6	0.0	4.97	14.70	12.11	518.7	490.8	578.6	0.533	578.6	84.3	31
31.459	579.2	0.0	3.60	14.70	12.11	518.7	490.7	579.2	0.533	579.2	87.6	33
32.512	579.7	0.0	2.29	14.70	12.10	518.7	490.7	579.7	0.534	579.7	90.8	35
33.532	580.0	0.0	1.04	14.70	12.10	518.7	490.6	580.0	0.534	580.0	94.0	37
34.522	580.2	0.0	-0.14	14.70	12.10	518.7	490.6	580.2	0.534	580.2	97.0	39
35.484	580.2	0.0	-1.27	14.70	12.10	518.7	490.6	580.2	0.534	580.2	99.9	41

7 AUG 91 LOW NOISE FAN STUDY. BPR = 14:1, RC = 1.382, WAC = 1036.9 INTERSTAGE DATA
STATION NO. 7 PAGE 7
ANNULUS EXIT 7 16:20:15 91/219 COPY 1 OF 1

MASS FLOW RATE 1036.90 FLOW RATE/SQ. FT. 37.94 (CORRECTED) MASS AVE. TOTAL PRESSURE 14.70
CORRECTED FLOW RATE 1036.90 ANNULUS AREA 27.33 SQ. FT =3935.1 SQ.IN MASS AVE. TOTAL TEMPERATURE 518.7

RADIUS INCHES	AXIAL VELOCITY	WHIRL VELOCITY	RADIAL VELOCITY	TOTAL PRESSURE	STATIC PRESSURE	TEMPERATURES TOTAL	TEMPERATURES STATIC	ABSOLUTE VELOCITY	ABSOLUTE MACH NO.	MER. VELOCITY	PERCENT SPAN	S.L. NO.
2.833	508.2	0.0	3.09	14.70	12.67	518.7	497.1	508.2	0.465	508.2	0.1	1
6.253	524.0	0.0	18.26	14.70	12.55	518.7	495.8	524.3	0.480	524.3	10.6	3
8.347	532.6	0.0	20.88	14.70	12.48	518.7	495.0	533.0	0.489	533.0	17.0	5
9.997	538.8	0.0	21.67	14.70	12.43	518.7	494.4	539.3	0.495	539.3	22.0	7
13.091	549.1	0.0	21.30	14.70	12.35	518.7	493.5	549.5	0.504	549.5	31.5	9
15.502	556.0	0.0	19.95	14.70	12.30	518.7	492.9	556.3	0.511	556.3	38.8	11
17.593	561.1	0.0	18.28	14.70	12.26	518.7	492.4	561.4	0.516	561.4	45.2	13
19.451	565.0	0.0	16.54	14.70	12.22	518.7	492.0	565.2	0.520	565.2	50.9	15
21.139	568.1	0.0	14.82	14.70	12.20	518.7	491.8	568.3	0.523	568.3	56.1	17
22.697	570.6	0.0	13.14	14.70	12.18	518.7	491.5	570.7	0.525	570.7	60.8	19
24.150	572.6	0.0	11.52	14.70	12.16	518.7	491.3	572.7	0.527	572.7	65.3	21
25.517	574.2	0.0	9.97	14.70	12.15	518.7	491.2	574.3	0.528	574.3	69.5	23
26.813	575.6	0.0	8.48	14.70	12.14	518.7	491.0	575.6	0.530	575.6	73.4	25
28.046	576.7	0.0	7.07	14.70	12.13	518.7	490.9	576.7	0.531	576.7	77.2	27
29.227	577.5	0.0	5.72	14.70	12.12	518.7	490.9	577.6	0.532	577.6	80.8	29
30.360	578.2	0.0	4.42	14.70	12.12	518.7	490.8	578.3	0.532	578.3	84.3	31
31.452	578.8	0.0	3.19	14.70	12.11	518.7	490.7	578.8	0.533	578.8	87.6	33
32.506	579.2	0.0	2.02	14.70	12.11	518.7	490.7	579.2	0.533	579.2	90.8	35
33.527	579.5	0.0	0.89	14.70	12.11	518.7	490.7	579.5	0.533	579.5	94.0	37
34.518	579.7	0.0	-0.17	14.70	12.10	518.7	490.7	579.7	0.534	579.7	97.0	39
35.480	579.8	0.0	-1.19	14.70	12.10	518.7	490.7	579.8	0.534	579.8	99.9	41

7 AUG 91 LOW NOISE FAN STUDY. BPR = 14:1, RC = 1.382, WAC = 1036.9 INTERSTAGE DATA
STATION NO. 8 PAGE 8
ANNULUS EXIT 8 16:20:15 91/219 COPY 1 OF 1

MASS FLOW RATE 1036.90 FLOW RATE/SQ. FT. 37.95 (CORRECTED) MASS AVE. TOTAL PRESSURE 14.70
CORRECTED FLOW RATE 1036.90 ANNULUS AREA 27.32 SQ. FT =3934.4 SQ.IN MASS AVE. TOTAL TEMPERATURE 518.7

RADIUS INCHES	AXIAL VELOCITY	WHIRL VELOCITY	RADIAL VELOCITY	TOTAL PRESSURE	STATIC PRESSURE	TEMPERATURES TOTAL	TEMPERATURES STATIC	ABSOLUTE VELOCITY	ABSOLUTE MACH NO.	MER. VELOCITY	PERCENT SPAN	S.L. NO.
2.847	477.3	0.0	17.83	14.70	12.90	518.7	499.7	477.6	0.436	477.6	0.1	1
6.340	508.1	0.0	28.06	14.70	12.67	518.7	497.1	508.9	0.466	508.9	10.8	3
8.450	520.6	0.0	30.15	14.70	12.57	518.7	496.0	521.5	0.478	521.5	17.3	5
10.107	529.2	0.0	30.68	14.70	12.50	518.7	495.3	530.1	0.486	530.1	22.3	7
13.205	543.1	0.0	29.82	14.70	12.40	518.7	494.0	543.9	0.499	543.9	31.8	9
15.612	552.4	0.0	27.93	14.70	12.32	518.7	493.2	553.1	0.508	553.1	39.2	11
17.698	559.3	0.0	25.69	14.70	12.27	518.7	492.5	559.9	0.514	559.9	45.6	13
19.549	564.7	0.0	23.36	14.70	12.22	518.7	492.0	565.1	0.520	565.1	51.2	15
21.229	568.9	0.0	21.03	14.70	12.19	518.7	491.7	569.3	0.524	569.3	56.3	17
22.778	572.4	0.0	18.74	14.70	12.16	518.7	491.3	572.7	0.527	572.7	61.1	19
24.222	575.1	0.0	16.52	14.70	12.14	518.7	491.1	575.4	0.530	575.4	65.5	21
25.581	577.4	0.0	14.38	14.70	12.12	518.7	490.9	577.6	0.532	577.6	69.7	23
26.868	579.3	0.0	12.32	14.70	12.11	518.7	490.7	579.4	0.533	579.4	73.6	25
28.093	580.8	0.0	10.36	14.70	12.09	518.7	490.5	580.9	0.535	580.9	77.3	27
29.266	582.0	0.0	8.47	14.70	12.08	518.7	490.4	582.1	0.536	582.1	80.9	29
30.391	583.0	0.0	6.67	14.70	12.08	518.7	490.3	583.0	0.537	583.0	84.4	31
31.476	583.7	0.0	4.96	14.70	12.07	518.7	490.3	583.7	0.538	583.7	87.7	33
32.523	584.3	0.0	3.32	14.70	12.07	518.7	490.2	584.3	0.538	584.3	90.9	35
33.537	584.6	0.0	1.77	14.70	12.06	518.7	490.2	584.7	0.539	584.7	94.0	37
34.521	584.9	0.0	0.29	14.70	12.06	518.7	490.2	584.9	0.539	584.9	97.0	39
35.478	585.0	0.0	-1.12	14.70	12.06	518.7	490.1	585.0	0.539	585.0	99.9	41

7 AUG 91 LOW NOISE FAN STUDY. BPR = 14:1, RC = 1.382, WAC = 1036.9 INTERSTAGE DATA
PAGE 9
STATION NO. 9
ANNULUS EXIT 9 16:20:15 91/219 COPY 1 OF 1

MASS FLOW RATE 1036.90 FLOW RATE/SQ. FT. 37.97 (CORRECTED) MASS AVE. TOTAL PRESSURE 14.70
CORRECTED FLOW RATE 1036.90 ANNULUS AREA 27.31 SQ. FT =3932.3 SQ.IN MASS AVE. TOTAL TEMPERATURE 518.7

RADIUS INCHES	AXIAL VELOCITY	WHIRL VELOCITY	RADIAL VELOCITY	TOTAL PRESSURE	STATIC PRESSURE	TEMPERATURES TOTAL	TEMPERATURES STATIC	ABSOLUTE VELOCITY	ABSOLUTE MACH NO.	MER. VELOCITY	PERCENT SPAN	S.L. NO.
2.949	463.5	0.0	42.87	14.70	12.98	518.7	500.6	465.5	0.424	465.5	0.2	1
6.425	502.0	0.0	38.50	14.70	12.71	518.7	497.5	503.4	0.460	503.4	10.8	3
8.527	517.2	0.0	37.92	14.70	12.59	518.7	496.3	518.6	0.475	518.6	17.3	5
10.177	527.4	0.0	36.99	14.70	12.52	518.7	495.4	528.7	0.484	528.7	22.3	7
13.262	543.3	0.0	34.01	14.70	12.39	518.7	494.0	544.4	0.499	544.4	31.8	9
15.659	553.3	0.0	30.86	14.70	12.31	518.7	493.1	554.2	0.509	554.2	39.1	11
17.737	560.7	0.0	27.75	14.70	12.26	518.7	492.4	561.3	0.516	561.3	45.5	13
19.580	566.2	0.0	24.80	14.70	12.21	518.7	491.9	566.7	0.521	566.7	51.2	15
21.254	570.5	0.0	22.03	14.70	12.18	518.7	491.5	570.9	0.525	570.9	56.3	17
22.799	573.9	0.0	19.44	14.70	12.15	518.7	491.2	574.2	0.528	574.2	61.0	19
24.239	576.6	0.0	17.00	14.70	12.13	518.7	490.9	576.9	0.531	576.9	65.4	21
25.595	578.9	0.0	14.70	14.70	12.11	518.7	490.7	579.1	0.533	579.1	69.6	23
26.879	580.7	0.0	12.54	14.70	12.09	518.7	490.6	580.8	0.535	580.8	73.5	25
28.102	582.1	0.0	10.51	14.70	12.08	518.7	490.4	582.2	0.536	582.2	77.3	27
29.272	583.3	0.0	8.58	14.70	12.07	518.7	490.3	583.4	0.537	583.4	80.9	29
30.396	584.2	0.0	6.75	14.70	12.07	518.7	490.2	584.3	0.538	584.3	84.3	31
31.478	585.0	0.0	5.03	14.70	12.06	518.7	490.1	585.0	0.539	585.0	87.6	33
32.524	585.5	0.0	3.39	14.70	12.06	518.7	490.1	585.5	0.539	585.5	90.9	35
33.537	585.9	0.0	1.83	14.70	12.05	518.7	490.1	585.9	0.540	585.9	94.0	37
34.519	586.1	0.0	0.35	14.70	12.05	518.7	490.0	586.1	0.540	586.1	97.0	39
35.474	586.2	0.0	-1.05	14.70	12.05	518.7	490.0	586.2	0.540	586.2	99.9	41

7 AUG 91 LOW NOISE FAN STUDY. BPR = 14:1, RC = 1.382, WAC = 1036.9 INTERSTAGE DATA
PAGE 10
STATION NO. 10
ANNULUS EXIT 10 16:20:15 91/219 COPY 1 OF 1

MASS FLOW RATE 1036.90 FLOW RATE/SQ. FT. 38.01 (CORRECTED) MASS AVE. TOTAL PRESSURE 14.70
CORRECTED FLOW RATE 1036.90 ANNULUS AREA 27.28 SQ. FT =3927.7 SQ.IN MASS AVE. TOTAL TEMPERATURE 518.7

RADIUS INCHES	AXIAL VELOCITY	WHIRL VELOCITY	RADIAL VELOCITY	TOTAL PRESSURE	STATIC PRESSURE	TEMPERATURES TOTAL	TEMPERATURES STATIC	ABSOLUTE VELOCITY	ABSOLUTE MACH NO.	MER. VELOCITY	PERCENT SPAN	S.L. NO.
3.135	447.0	0.0	65.66	14.70	13.08	518.7	501.7	451.8	0.411	451.8	0.2	1
6.578	488.5	0.0	52.98	14.70	12.80	518.7	498.5	491.4	0.449	491.4	10.8	3
8.678	507.0	0.0	50.52	14.70	12.66	518.7	497.0	509.5	0.466	509.5	17.3	5
10.325	519.5	0.0	48.50	14.70	12.57	518.7	496.0	521.7	0.478	521.7	22.3	7
13.400	539.0	0.0	43.85	14.70	12.42	518.7	494.3	540.7	0.496	540.7	31.8	9
15.786	551.2	0.0	39.56	14.70	12.33	518.7	493.2	552.6	0.507	552.6	39.2	11
17.852	560.1	0.0	35.51	14.70	12.26	518.7	492.4	561.3	0.516	561.3	45.6	13
19.685	566.9	0.0	31.75	14.70	12.20	518.7	491.8	567.8	0.522	567.8	51.2	15
21.349	572.2	0.0	28.24	14.70	12.16	518.7	491.3	572.9	0.527	572.9	56.3	17
22.883	576.4	0.0	24.95	14.70	12.13	518.7	490.9	576.9	0.531	576.9	61.1	19
24.314	579.8	0.0	21.88	14.70	12.10	518.7	490.6	580.2	0.534	580.2	65.5	21
25.660	582.5	0.0	18.98	14.70	12.08	518.7	490.4	582.8	0.537	582.8	69.6	23
26.935	584.8	0.0	16.25	14.70	12.06	518.7	490.1	585.0	0.539	585.0	73.6	25
28.150	586.6	0.0	13.67	14.70	12.05	518.7	490.0	586.7	0.541	586.7	77.3	27
29.312	588.0	0.0	11.23	14.70	12.03	518.7	489.8	588.1	0.542	588.1	80.9	29
30.427	589.2	0.0	8.92	14.70	12.02	518.7	489.7	589.2	0.543	589.2	84.3	31
31.502	590.1	0.0	6.73	14.70	12.02	518.7	489.6	590.1	0.544	590.1	87.7	33
32.541	590.7	0.0	4.65	14.70	12.01	518.7	489.6	590.7	0.544	590.7	90.9	35
33.547	591.2	0.0	2.68	14.70	12.01	518.7	489.5	591.2	0.545	591.2	94.0	37
34.523	591.4	0.0	0.81	14.70	12.01	518.7	489.5	591.4	0.545	591.4	97.0	39
35.472	591.5	0.0	-0.97	14.70	12.00	518.7	489.5	591.5	0.545	591.5	99.9	41

7 AUG 91 LOW NOISE FAN STUDY. BPR = 14:1, RC = 1.382, WAC = 1036.9 INTERSTAGE DATA
STATION NO. 11 PAGE 11
ANNULUS EXIT 11 16:20:15 91/219 COPY 1 OF 1

MASS FLOW RATE 1036.90 FLOW RATE/SQ. FT. 38.08 (CORRECTED) MASS AVE. TOTAL PRESSURE 14.70
CORRECTED FLOW RATE 1036.90 ANNULUS AREA 27.23 SQ. FT =3921.5 SQ.IN MASS AVE. TOTAL TEMPERATURE 518.7

RADIUS INCHES	AXIAL VELOCITY	WHIRL VELOCITY	RADIAL VELOCITY	TOTAL PRESSURE	STATIC PRESSURE	TEMPERATURES TOTAL	TEMPERATURES STATIC	ABSOLUTE VELOCITY	ABSOLUTE MACH NO.	MER. VELOCITY	PERCENT SPAN	S.L. NO.
3.406	433.1	0.0	87.05	14.70	13.15	518.7	502.4	441.8	0.402	441.8	0.2	1
6.762	480.5	0.0	68.10	14.70	12.84	518.7	499.0	485.3	0.443	485.3	10.6	3
8.838	502.5	0.0	62.67	14.70	12.69	518.7	497.3	506.3	0.463	506.3	17.1	5
10.468	517.0	0.0	58.69	14.70	12.58	518.7	496.1	520.3	0.476	520.3	22.1	7
13.516	539.1	0.0	51.08	14.70	12.41	518.7	494.2	541.5	0.497	541.5	31.6	9
15.883	552.5	0.0	45.00	14.70	12.31	518.7	493.1	554.4	0.509	554.4	39.0	11
17.934	562.1	0.0	39.71	14.70	12.24	518.7	492.2	563.5	0.518	563.5	45.4	13
19.755	569.2	0.0	35.05	14.70	12.18	518.7	491.6	570.3	0.525	570.3	51.0	15
21.408	574.7	0.0	30.87	14.70	12.14	518.7	491.1	575.6	0.530	575.6	56.2	17
22.933	579.1	0.0	27.08	14.70	12.10	518.7	490.7	579.7	0.534	579.7	60.9	19
24.357	582.5	0.0	23.60	14.70	12.08	518.7	490.3	583.0	0.537	583.0	65.3	21
25.696	585.3	0.0	20.39	14.70	12.05	518.7	490.1	585.7	0.540	585.7	69.5	23
26.965	587.6	0.0	17.40	14.70	12.04	518.7	489.9	587.9	0.542	587.9	73.4	25
28.174	589.4	0.0	14.61	14.70	12.02	518.7	489.7	589.6	0.543	589.6	77.2	27
29.331	590.9	0.0	11.99	14.70	12.01	518.7	489.6	591.0	0.545	591.0	80.8	29
30.443	592.1	0.0	9.53	14.70	12.00	518.7	489.4	592.1	0.546	592.1	84.3	31
31.514	593.0	0.0	7.20	14.70	11.99	518.7	489.4	593.0	0.547	593.0	87.6	33
32.549	593.6	0.0	5.01	14.70	11.99	518.7	489.3	593.6	0.547	593.6	90.8	35
33.551	594.1	0.0	2.93	14.70	11.98	518.7	489.3	594.1	0.548	594.1	93.9	37
34.523	594.4	0.0	0.96	14.70	11.98	518.7	489.2	594.4	0.548	594.4	96.9	39
35.469	594.5	0.0	-0.91	14.70	11.98	518.7	489.2	594.5	0.548	594.5	99.9	41

7 AUG 91 LOW NOISE FAN STUDY. BPR = 14:1, RC = 1.382, WAC = 1036.9 INTERSTAGE DATA
STATION NO. 12 PAGE 12
ANNULUS EXIT 12 16:20:15 91/219 COPY 1 OF 1

MASS FLOW RATE 1036.90 FLOW RATE/SQ. FT. 38.17 (CORRECTED) MASS AVE. TOTAL PRESSURE 14.70
CORRECTED FLOW RATE 1036.90 ANNULUS AREA 27.17 SQ. FT =3911.9 SQ.IN MASS AVE. TOTAL TEMPERATURE 518.7

RADIUS INCHES	AXIAL VELOCITY	WHIRL VELOCITY	RADIAL VELOCITY	TOTAL PRESSURE	STATIC PRESSURE	TEMPERATURES TOTAL	TEMPERATURES STATIC	ABSOLUTE VELOCITY	ABSOLUTE MACH NO.	MER. VELOCITY	PERCENT SPAN	S.L. NO.
3.760	413.8	0.0	112.91	14.70	13.23	518.7	503.3	429.0	0.390	429.0	0.2	1
7.020	468.8	0.0	87.97	14.70	12.90	518.7	499.7	477.0	0.435	477.0	10.4	3
9.067	494.6	0.0	79.38	14.70	12.73	518.7	497.8	500.9	0.458	500.9	16.9	5
10.679	511.5	0.0	73.35	14.70	12.61	518.7	496.4	516.8	0.473	516.8	21.9	7
13.695	537.0	0.0	62.72	14.70	12.42	518.7	494.3	540.7	0.496	540.7	31.4	9
16.040	552.4	0.0	54.81	14.70	12.31	518.7	493.0	555.1	0.510	555.1	38.8	11
18.072	563.3	0.0	48.17	14.70	12.22	518.7	492.0	565.4	0.520	565.4	45.2	13
19.877	571.4	0.0	42.45	14.70	12.16	518.7	491.3	573.0	0.527	573.0	50.9	15
21.516	577.7	0.0	37.37	14.70	12.11	518.7	490.7	578.9	0.533	578.9	56.0	17
23.029	582.7	0.0	32.79	14.70	12.07	518.7	490.3	583.6	0.538	583.6	60.8	19
24.440	586.7	0.0	28.61	14.70	12.04	518.7	489.9	587.4	0.541	587.4	65.2	21
25.769	589.9	0.0	24.75	14.70	12.01	518.7	489.6	590.4	0.544	590.4	69.4	23
27.027	592.5	0.0	21.16	14.70	11.99	518.7	489.4	592.9	0.547	592.9	73.3	25
28.227	594.6	0.0	17.82	14.70	11.98	518.7	489.2	594.9	0.549	594.9	77.1	27
29.375	596.3	0.0	14.67	14.70	11.96	518.7	489.0	596.5	0.550	596.5	80.7	29
30.478	597.7	0.0	11.72	14.70	11.95	518.7	488.9	597.8	0.551	597.8	84.2	31
31.540	598.7	0.0	8.93	14.70	11.94	518.7	488.8	598.7	0.552	598.7	87.5	33
32.567	599.4	0.0	6.29	14.70	11.94	518.7	488.7	599.5	0.553	599.5	90.8	35
33.562	600.0	0.0	3.80	14.70	11.93	518.7	488.7	600.0	0.553	600.0	93.9	37
34.528	600.3	0.0	1.43	14.70	11.93	518.7	488.6	600.3	0.554	600.3	96.9	39
35.467	600.4	0.0	-0.81	14.70	11.93	518.7	488.6	600.4	0.554	600.4	99.9	41

7 AUG 91 LOW NOISE FAN STUDY. BPR = 14:1, RC = 1.382, WAC = 1036.9 INTERSTAGE DATA
STATION NO. 13 PAGE 13
ANNULUS EXIT 13 16:20:15 91/219 COPY 1 OF 1

MASS FLOW RATE 1036.90 FLOW RATE/SQ. FT. 38.31 (CORRECTED) MASS AVE. TOTAL PRESSURE 14.70
CORRECTED FLOW RATE 1036.90 ANNULUS AREA 27.07 SQ. FT =3897.9 SQ.IN MASS AVE. TOTAL TEMPERATURE 518.7

RADIUS INCHES	AXIAL VELOCITY	WHIRL VELOCITY	RADIAL VELOCITY	TOTAL PRESSURE	STATIC PRESSURE	TEMPERATURES TOTAL	TEMPERATURES STATIC	ABSOLUTE VELOCITY	ABSOLUTE MACH NO.	MER. VELOCITY	PERCENT SPAN	S.L. NO.
4.255	400.7	0.0	140.31	14.70	13.26	518.7	503.6	424.6	0.386	424.6	0.2	1
7.346	462.7	0.0	108.82	14.70	12.91	518.7	499.8	475.3	0.434	475.3	10.0	3
9.337	492.0	0.0	96.06	14.70	12.72	518.7	497.7	501.2	0.458	501.2	16.4	5
10.914	510.9	0.0	87.24	14.70	12.60	518.7	496.3	518.3	0.474	518.3	21.4	7
13.879	538.7	0.0	72.53	14.70	12.40	518.7	494.0	543.6	0.499	543.6	30.9	9
16.191	555.2	0.0	62.28	14.70	12.28	518.7	492.7	558.6	0.513	558.6	38.3	11
18.200	566.7	0.0	54.06	14.70	12.19	518.7	491.7	569.3	0.524	569.3	44.7	13
19.986	575.2	0.0	47.20	14.70	12.13	518.7	490.9	577.1	0.531	577.1	50.4	15
21.609	581.7	0.0	41.27	14.70	12.07	518.7	490.3	583.2	0.537	583.2	55.6	17
23.109	586.9	0.0	36.02	14.70	12.03	518.7	489.9	588.0	0.542	588.0	60.4	19
24.508	591.0	0.0	31.30	14.70	12.00	518.7	489.5	591.8	0.546	591.8	64.9	21
25.827	594.3	0.0	27.00	14.70	11.98	518.7	489.2	594.9	0.549	594.9	69.1	23
27.077	597.0	0.0	23.04	14.70	11.95	518.7	488.9	597.5	0.551	597.5	73.1	25
28.268	599.2	0.0	19.37	14.70	11.94	518.7	488.7	599.5	0.553	599.5	76.9	27
29.408	600.9	0.0	15.95	14.70	11.92	518.7	488.5	601.1	0.555	601.1	80.5	29
30.504	602.3	0.0	12.74	14.70	11.91	518.7	488.4	602.4	0.556	602.4	84.0	31
31.560	603.4	0.0	9.73	14.70	11.90	518.7	488.3	603.4	0.557	603.4	87.4	33
32.581	604.1	0.0	6.89	14.70	11.90	518.7	488.2	604.2	0.558	604.2	90.7	35
33.570	604.7	0.0	4.21	14.70	11.89	518.7	488.2	604.7	0.558	604.7	93.8	37
34.531	605.0	0.0	1.66	14.70	11.89	518.7	488.2	605.0	0.558	605.0	96.9	39
35.465	605.2	0.0	-0.75	14.70	11.89	518.7	488.1	605.2	0.559	605.2	99.9	41

7 AUG 91 LOW NOISE FAN STUDY. BPR = 14:1, RC = 1.382, WAC = 1036.9 INTERSTAGE DATA
STATION NO. 14 PAGE 14
ANNULUS EXIT 14 16:20:15 91/219 COPY 1 OF 1

MASS FLOW RATE 1036.90 FLOW RATE/SQ. FT. 38.50 (CORRECTED) MASS AVE. TOTAL PRESSURE 14.70
CORRECTED FLOW RATE 1036.90 ANNULUS AREA 26.93 SQ. FT =3878.2 SQ.IN MASS AVE. TOTAL TEMPERATURE 518.7

RADIUS INCHES	AXIAL VELOCITY	WHIRL VELOCITY	RADIAL VELOCITY	TOTAL PRESSURE	STATIC PRESSURE	TEMPERATURES TOTAL	TEMPERATURES STATIC	ABSOLUTE VELOCITY	ABSOLUTE MACH NO.	MER. VELOCITY	PERCENT SPAN	S.L. NO.
4.850	389.6	0.0	172.24	14.70	13.25	518.7	503.5	426.0	0.387	426.0	0.2	1
7.752	457.2	0.0	134.14	14.70	12.91	518.7	499.7	476.5	0.435	476.5	9.6	3
9.674	489.5	0.0	116.52	14.70	12.71	518.7	497.6	503.2	0.460	503.2	15.9	5
11.210	510.1	0.0	104.61	14.70	12.58	518.7	496.1	520.7	0.477	520.7	20.9	7
14.114	540.1	0.0	85.62	14.70	12.37	518.7	493.7	546.9	0.502	546.9	30.3	9
16.389	557.8	0.0	73.00	14.70	12.25	518.7	492.3	562.6	0.517	562.6	37.7	11
18.369	570.2	0.0	63.15	14.70	12.15	518.7	491.2	573.7	0.528	573.7	44.2	13
20.132	579.4	0.0	55.06	14.70	12.08	518.7	490.4	582.0	0.536	582.0	49.9	15
21.737	586.5	0.0	48.12	14.70	12.03	518.7	489.8	588.4	0.542	588.4	55.2	17
23.220	592.1	0.0	42.02	14.70	11.99	518.7	489.3	593.6	0.547	593.6	60.0	19
24.605	596.6	0.0	36.53	14.70	11.95	518.7	488.9	597.7	0.551	597.7	64.5	21
25.910	600.2	0.0	31.54	14.70	11.92	518.7	488.6	601.0	0.555	601.0	68.7	23
27.148	603.2	0.0	26.95	14.70	11.90	518.7	488.3	603.8	0.557	603.8	72.8	25
28.327	605.5	0.0	22.70	14.70	11.88	518.7	488.1	606.0	0.559	606.0	76.6	27
29.457	607.5	0.0	18.74	14.70	11.87	518.7	487.9	607.7	0.561	607.7	80.3	29
30.543	609.0	0.0	15.02	14.70	11.85	518.7	487.7	609.2	0.562	609.2	83.8	31
31.591	610.1	0.0	11.53	14.70	11.84	518.7	487.6	610.2	0.564	610.2	87.2	33
32.603	611.0	0.0	8.24	14.70	11.84	518.7	487.5	611.1	0.564	611.1	90.5	35
33.584	611.6	0.0	5.12	14.70	11.83	518.7	487.5	611.6	0.565	611.6	93.7	37
34.537	612.0	0.0	2.17	14.70	11.83	518.7	487.5	612.0	0.565	612.0	96.8	39
35.463	612.1	0.0	-0.63	14.70	11.83	518.7	487.4	612.1	0.565	612.1	99.9	41

7 AUG 91 LOW NOISE FAN STUDY. BPR = 14:1, RC = 1.382, WAC = 1036.9 INTERSTAGE DATA
STATION NO. 15 PAGE 15
ANNULUS EXIT 15 16:20:15 91/219 COPY 1 OF 1

MASS FLOW RATE 1036.90 FLOW RATE/SQ. FT. 39.16 (CORRECTED) MASS AVE. TOTAL PRESSURE 14.70
CORRECTED FLOW RATE 1036.90 ANNULUS AREA 26.48 SQ. FT =3812.5 SQ.IN MASS AVE. TOTAL TEMPERATURE 518.7

RADIUS INCHES	AXIAL VELOCITY	WHIRL VELOCITY	RADIAL VELOCITY	TOTAL PRESSURE	STATIC PRESSURE	TEMPERATURES TOTAL	TEMPERATURES STATIC	ABSOLUTE VELOCITY	ABSOLUTE MACH NO.	MER. VELOCITY	PERCENT SPAN	S.L. NO.
6.568	422.0	0.0	237.34	14.70	12.85	518.7	499.1	484.1	0.442	484.1	0.1	1
8.849	478.3	0.0	181.82	14.70	12.65	518.7	496.8	511.7	0.468	511.7	8.0	3
10.533	507.0	0.0	153.38	14.70	12.51	518.7	495.3	529.7	0.485	529.7	13.8	5
11.930	525.9	0.0	134.52	14.70	12.40	518.7	494.1	542.9	0.498	542.9	18.6	7
14.646	554.1	0.0	105.84	14.70	12.23	518.7	492.1	564.2	0.519	564.2	28.0	9
16.814	571.1	0.0	87.94	14.70	12.12	518.7	490.8	577.9	0.532	577.9	35.5	11
18.721	583.2	0.0	74.66	14.70	12.03	518.7	489.9	588.0	0.542	588.0	42.1	13
20.429	592.3	0.0	64.16	14.70	11.97	518.7	489.1	595.8	0.549	595.8	47.9	15
21.989	599.4	0.0	55.46	14.70	11.92	518.7	488.5	601.9	0.555	601.9	53.3	17
23.435	605.0	0.0	47.99	14.70	11.87	518.7	488.0	606.9	0.560	606.9	58.3	19
24.788	609.5	0.0	41.44	14.70	11.84	518.7	487.6	610.9	0.564	610.9	63.0	21
26.066	613.2	0.0	35.59	14.70	11.81	518.7	487.2	614.2	0.567	614.2	67.4	23
27.279	616.2	0.0	30.29	14.70	11.79	518.7	486.9	616.9	0.570	616.9	71.6	25
28.437	618.6	0.0	25.44	14.70	11.77	518.7	486.7	619.1	0.572	619.1	75.6	27
29.547	620.5	0.0	20.97	14.70	11.75	518.7	486.5	620.9	0.574	620.9	79.4	29
30.615	622.0	0.0	16.81	14.70	11.74	518.7	486.4	622.3	0.575	622.3	83.1	31
31.645	623.2	0.0	12.93	14.70	11.73	518.7	486.3	623.3	0.576	623.3	86.7	33
32.641	624.1	0.0	9.28	14.70	11.72	518.7	486.2	624.2	0.577	624.2	90.1	35
33.608	624.7	0.0	5.84	14.70	11.72	518.7	486.1	624.7	0.578	624.7	93.4	37
34.546	625.0	0.0	2.58	14.70	11.72	518.7	486.1	625.1	0.578	625.1	96.7	39
35.460	625.2	0.0	-0.53	14.70	11.71	518.7	486.1	625.2	0.578	625.2	99.8	41

7 AUG 91 LOW NOISE FAN STUDY. BPR = 14:1, RC = 1.382, WAC = 1036.9 INTERSTAGE DATA
STATION NO. 16 PAGE 16
ANNULUS EXIT 16 16:20:15 91/219 COPY 1 OF 1

MASS FLOW RATE 1036.90 FLOW RATE/SQ. FT. 40.05 (CORRECTED) MASS AVE. TOTAL PRESSURE 14.79
CORRECTED FLOW RATE 1036.90 ANNULUS AREA 25.89 SQ. FT =3728.2 SQ.IN MASS AVE. TOTAL TEMPERATURE 518.7

RADIUS INCHES	AXIAL VELOCITY	WHIRL VELOCITY	RADIAL VELOCITY	TOTAL PRESSURE	STATIC PRESSURE	TEMPERATURES TOTAL	TEMPERATURES STATIC	ABSOLUTE VELOCITY	ABSOLUTE MACH NO.	MER. VELOCITY	PERCENT SPAN	S.L. NO.
8.261	477.6	0.0	258.88	14.70	12.40	518.7	494.1	543.2	0.498	543.2	0.1	1
10.055	512.2	0.0	208.92	14.70	12.32	518.7	493.2	553.2	0.508	553.2	6.7	3
11.506	533.5	0.0	180.05	14.70	12.24	518.7	492.2	563.0	0.518	563.0	12.0	5
12.759	548.7	0.0	159.98	14.70	12.17	518.7	491.4	571.5	0.526	571.5	16.6	7
15.270	573.0	0.0	128.38	14.70	12.04	518.7	489.9	587.2	0.541	587.2	25.8	9
17.321	588.4	0.0	108.21	14.70	11.95	518.7	488.8	598.3	0.552	598.3	33.3	11
19.144	599.9	0.0	92.96	14.70	11.87	518.7	488.0	607.0	0.560	607.0	40.0	13
20.788	608.7	0.0	80.68	14.70	11.81	518.7	487.2	614.0	0.567	614.0	46.0	15
22.297	615.8	0.0	70.32	14.70	11.76	518.7	486.7	619.8	0.573	619.8	51.6	17
23.700	621.5	0.0	61.30	14.70	11.72	518.7	486.2	624.5	0.578	624.5	56.7	19
25.016	626.1	0.0	53.26	14.70	11.69	518.7	485.8	628.4	0.581	628.4	61.5	21
26.261	629.9	0.0	45.99	14.70	11.66	518.7	485.4	631.6	0.585	631.6	66.1	23
27.445	633.1	0.0	39.33	14.70	11.63	518.7	485.1	634.3	0.587	634.3	70.4	25
28.576	635.6	0.0	33.18	14.70	11.61	518.7	484.9	636.5	0.589	636.5	74.6	27
29.662	637.7	0.0	27.47	14.70	11.60	518.7	484.7	638.3	0.591	638.3	78.6	29
30.707	639.3	0.0	22.13	14.70	11.59	518.7	484.6	639.7	0.593	639.7	82.4	31
31.716	640.6	0.0	17.11	14.70	11.58	518.7	484.4	640.8	0.594	640.8	86.1	33
32.693	641.6	0.0	12.40	14.70	11.57	518.7	484.3	641.7	0.595	641.7	89.7	35
33.640	642.3	0.0	7.94	14.70	11.56	518.7	484.3	642.4	0.595	642.4	93.2	37
34.562	642.8	0.0	3.73	14.70	11.56	518.7	484.2	642.8	0.596	642.8	96.5	39
35.458	643.2	0.0	-0.26	14.70	11.56	518.7	484.2	643.2	0.596	643.2	99.8	41

7 AUG 91 LOW NOISE FAN STUDY. BPR = 14:1, RC = 1.382, WAC = 1036.9 INTERSTAGE DATA
PAGE 17
STATION NO. 17 16:20:15 91/219 COPY 1 OF 1
ANNULUS EXIT 17

MASS FLOW RATE 1036.90 FLOW RATE/SQ. FT. 40.90 (CORRECTED) MASS AVE. TOTAL PRESSURE 14.70
CORRECTED FLOW RATE 1036.90 ANNULUS AREA 25.35 SQ. FT =3650.3 SQ.IN MASS AVE. TOTAL TEMPERATURE 518.7

RADIUS INCHES	AXIAL VELOCITY	WHIRL VELOCITY	RADIAL VELOCITY	TOTAL PRESSURE	STATIC PRESSURE	TEMPERATURES TOTAL	TEMPERATURES STATIC	ABSOLUTE VELOCITY	ABSOLUTE MACH NO.	MER. VELOCITY	PERCENT SPAN	S.L. NO.
9.620	516.4	0.0	264.34	14.70	12.10	518.7	490.6	580.1	0.534	580.1	0.1	1
11.129	540.9	0.0	223.13	14.70	12.06	518.7	490.1	585.1	0.539	585.1	5.9	3
12.414	557.7	0.0	195.28	14.70	12.01	518.7	489.6	590.9	0.545	590.9	10.9	5
13.552	570.0	0.0	174.47	14.70	11.97	518.7	489.0	596.1	0.550	596.1	15.3	7
15.889	590.5	0.0	140.17	14.70	11.87	518.7	488.0	606.9	0.560	606.9	24.3	9
17.834	604.8	0.0	118.06	14.70	11.79	518.7	487.0	616.2	0.569	616.2	31.8	11
19.579	616.3	0.0	101.40	14.70	11.72	518.7	486.2	624.5	0.578	624.5	38.5	13
21.162	625.6	0.0	87.96	14.70	11.66	518.7	485.4	631.7	0.585	631.7	44.6	15
22.621	633.2	0.0	76.60	14.70	11.60	518.7	484.8	637.8	0.591	637.8	50.3	17
23.980	639.4	0.0	66.70	14.70	11.56	518.7	484.2	642.9	0.596	642.9	55.5	19
25.259	644.6	0.0	57.90	14.70	11.52	518.7	483.8	647.2	0.600	647.2	60.4	21
26.479	648.9	0.0	49.97	14.70	11.49	518.7	483.4	650.8	0.604	650.8	65.1	23
27.623	652.5	0.0	42.73	14.70	11.46	518.7	483.0	653.8	0.607	653.8	69.6	25
28.726	655.4	0.0	36.07	14.70	11.44	518.7	482.8	656.3	0.609	656.3	73.8	27
29.785	657.7	0.0	29.91	14.70	11.42	518.7	482.5	658.4	0.611	658.4	77.9	29
30.806	659.5	0.0	24.19	14.70	11.40	518.7	482.4	660.0	0.613	660.0	81.9	31
31.793	660.9	0.0	18.86	14.70	11.39	518.7	482.2	661.2	0.614	661.2	85.7	33
32.748	662.0	0.0	13.89	14.70	11.38	518.7	482.1	662.1	0.615	662.1	89.4	35
33.676	662.6	0.0	9.25	14.70	11.38	518.7	482.1	662.7	0.616	662.7	92.9	37
34.578	663.1	0.0	4.91	14.70	11.38	518.7	482.0	663.1	0.616	663.1	96.4	39
35.458	663.3	0.0	0.85	14.70	11.37	518.7	482.0	663.3	0.616	663.3	99.8	41

7 AUG 91 LOW NOISE FAN STUDY. BPR = 14:1, RC = 1.382, WAC = 1036.9 INTERSTAGE DATA
STATION NO. 18 PAGE 18
ANNULUS EXIT 18 16:20:15 91/219 COPY 1 OF 1

MASS FLOW RATE 1036.90 FLOW RATE/SQ. FT. 41.53 (CORRECTED) MASS AVE. TOTAL PRESSURE 14.70
CORRECTED FLOW RATE 1036.90 ANNULUS AREA 24.97 SQ. FT =3595.1 SQ.IN MASS AVE. TOTAL TEMPERATURE 518.7

RADIUS INCHES	AXIAL VELOCITY	WHIRL VELOCITY	RADIAL VELOCITY	TOTAL PRESSURE	STATIC PRESSURE	TEMPERATURES TOTAL	TEMPERATURES STATIC	ABSOLUTE VELOCITY	ABSOLUTE MACH NO.	MER. VELOCITY	PERCENT SPAN	S.L. NO.
10.665	563.0	0.0	269.60	14.70	11.72	518.7	486.2	624.2	0.577	624.2	0.1	1
11.967	581.4	0.0	230.93	14.70	11.71	518.7	486.1	625.5	0.579	625.5	5.3	3
13.115	594.0	0.0	203.53	14.70	11.69	518.7	485.8	627.9	0.581	627.9	9.9	5
14.155	603.3	0.0	182.84	14.70	11.67	518.7	485.5	630.4	0.583	630.4	14.1	7
16.339	618.7	0.0	149.51	14.70	11.61	518.7	484.9	636.5	0.590	636.5	22.9	9
18.190	630.2	0.0	128.65	14.70	11.56	518.7	484.2	643.2	0.596	643.2	30.3	11
19.870	640.5	0.0	111.69	14.70	11.49	518.7	483.4	650.2	0.603	650.2	37.1	13
21.403	649.3	0.0	97.41	14.70	11.43	518.7	482.7	656.6	0.609	656.6	43.3	15
22.822	656.6	0.0	85.06	14.70	11.38	518.7	482.1	662.1	0.615	662.1	49.0	17
24.149	662.7	0.0	74.18	14.70	11.34	518.7	481.6	666.8	0.620	666.8	54.3	19
25.400	667.7	0.0	64.42	14.70	11.31	518.7	481.2	670.8	0.624	670.8	59.4	21
26.588	671.8	0.0	55.59	14.70	11.27	518.7	480.8	674.1	0.627	674.1	64.1	23
27.721	675.2	0.0	47.50	14.70	11.25	518.7	480.5	676.8	0.630	676.8	68.7	25
28.806	677.9	0.0	40.04	14.70	11.23	518.7	480.2	679.0	0.632	679.0	73.1	27
29.850	680.0	0.0	33.13	14.70	11.21	518.7	480.0	680.8	0.634	680.8	77.3	29
30.858	681.6	0.0	26.69	14.70	11.20	518.7	479.9	682.1	0.635	682.1	81.3	31
31.832	682.7	0.0	20.70	14.70	11.19	518.7	479.8	683.0	0.636	683.0	85.2	33
32.777	683.4	0.0	15.13	14.70	11.19	518.7	479.7	683.6	0.636	683.6	89.0	35
33.695	683.8	0.0	9.98	14.70	11.18	518.7	479.7	683.8	0.637	683.8	92.7	37
34.589	683.8	0.0	5.23	14.70	11.18	518.7	479.7	683.8	0.637	683.8	96.3	39
35.460	683.7	0.0	0.89	14.70	11.19	518.7	479.7	683.7	0.637	683.7	99.8	41

AUG 91 LOW NOISE FAN STUDY. BPR = 14:1, RC = 1.382, WAC = 1036.9 INTERSTAGE DATA
ION NO. 19 PAGE 19
R EXIT 1 16:20:15 91/219 COPY 1 OF 1

FLOW RATE 1036.90 FLOW RATE/SQ. FT. 34.49 (CORRECTED) MASS AVE. TOTAL PRESSURE 20.25
ECTED FLOW RATE 789.86 ANNULUS AREA 22.90 SQ. FT =3297.6 SQ.IN MASS AVE. TOTAL TEMPERATURE 571.6
ECTED TIP SPEED 1000. FT/SEC ROTOR ADIABATIC EFFICIENCY 94.1
SURE RATIO 1.378 CUMULATIVE ADIABATIC EFFICIENCY 94.1

US ES	AXIAL VELOCITY	WHIRL VELOCITY	RADIAL VELOCITY	TOTAL PRESSURE	STATIC PRESSURE	TEMPERATURES TOTAL	TEMPERATURES STATIC	ABSOLUTE VELOCITY	ABSOLUTE MACH NO.	MER. VELOCITY	PERCENT SPAN	S.L. NO.
41	577.8	400.8	192.92	17.35	12.90	545.5	501.1	729.2	0.664	609.2	0.2	1
98	563.0	393.5	183.11	17.49	13.22	546.7	504.6	710.9	0.645	592.0	4.7	3
09	543.2	388.8	170.20	17.63	13.57	548.1	508.5	689.3	0.623	569.2	9.0	5
89	520.0	390.5	154.92	17.81	13.94	549.8	512.6	668.5	0.602	542.6	13.1	7
39	444.8	402.3	104.88	18.30	14.98	554.6	523.7	603.8	0.543	457.0	22.7	9
68	500.4	405.4	100.17	18.77	14.93	558.4	523.0	651.8	0.581	510.4	31.3	11
72	555.2	408.2	91.80	19.16	14.77	561.5	521.3	695.2	0.621	562.7	38.4	13
86	583.3	411.4	79.78	19.50	14.79	564.4	521.4	718.2	0.642	588.7	44.5	15
83	599.3	414.2	68.68	19.82	14.88	567.0	522.4	731.8	0.653	603.3	50.1	17
95	609.9	416.3	59.16	20.10	15.00	569.4	523.7	740.8	0.660	612.8	55.4	19
39	617.9	418.6	51.36	20.37	15.13	571.8	525.2	748.1	0.666	620.0	60.3	21
27	624.1	421.2	44.83	20.62	15.26	574.0	526.7	754.2	0.670	625.7	64.9	23
68	629.3	424.1	39.11	20.86	15.38	576.3	528.2	759.8	0.674	630.5	69.3	25
66	634.8	427.2	34.16	21.10	15.50	578.5	529.7	765.9	0.679	635.7	73.5	27
28	639.1	431.8	29.86	21.33	15.61	580.9	531.3	771.9	0.683	639.8	77.6	29
57	642.9	434.3	26.07	21.54	15.72	582.9	532.8	776.3	0.686	643.4	81.5	31
58	645.0	434.7	22.68	21.69	15.82	584.6	534.2	778.2	0.687	645.4	85.2	33
38	641.9	429.4	19.67	21.71	15.92	585.4	535.7	772.5	0.681	642.2	88.9	35
01	636.8	422.1	17.19	21.69	16.02	585.8	537.2	764.1	0.673	637.0	92.5	37
53	627.9	411.4	15.24	21.59	16.12	585.5	538.6	750.8	0.660	628.1	96.0	39
02	610.7	395.0	13.90	21.34	16.22	584.2	540.2	727.5	0.638	610.9	99.5	41

IVE ET	MACH NOS. EXIT	TOTAL TEMP RISE	TOTAL TEMP RATIO	WHEEL SPEED IN	WHEEL SPEED OUT	ROTOR PRESSURE RATIO	ROTOR ADIABATIC EFFICIENCY	ROTOR POLYTROPIC EFFICIENCY	
41	0.555	26.78	1.052	300.4	401.1	1.180	94.1	94.2	1
57	0.538	28.06	1.054	337.1	428.0	1.190	94.4	94.5	3
74	0.518	29.39	1.057	369.4	453.7	1.200	94.3	94.5	5
90	0.495	31.13	1.060	398.7	478.5	1.212	94.2	94.4	7
27	0.424	35.93	1.069	460.2	536.2	1.245	93.3	93.5	9
62	0.483	39.69	1.077	512.3	587.7	1.277	94.6	94.8	11
96	0.540	42.84	1.083	559.6	630.1	1.304	95.4	95.5	13
27	0.573	45.71	1.088	602.8	667.1	1.327	95.6	95.8	15
57	0.596	48.35	1.093	642.8	700.8	1.349	95.7	95.9	17
85	0.614	50.76	1.098	680.1	732.2	1.368	95.7	95.9	19
12	0.631	53.09	1.102	715.4	761.6	1.386	95.5	95.7	21
37	0.645	55.37	1.107	748.8	789.4	1.403	95.2	95.5	23
61	0.659	57.62	1.111	780.8	815.9	1.419	94.8	95.0	25
85	0.672	59.84	1.115	811.3	841.2	1.436	94.4	94.7	27
07	0.684	62.23	1.120	840.7	865.5	1.452	93.7	94.0	29
28	0.696	64.27	1.124	869.1	888.8	1.465	93.1	93.5	31
49	0.708	65.97	1.127	896.5	911.4	1.476	92.5	92.9	33
70	0.719	66.72	1.129	923.2	933.3	1.478	91.7	92.2	35
89	0.731	67.10	1.129	949.0	954.8	1.476	91.0	91.5	37
08	0.742	66.85	1.129	974.2	976.0	1.469	90.2	90.7	39
27	0.753	65.57	1.126	998.7	997.1	1.452	89.0	89.6	41

DIFFUSION FACTOR	OMEGA BAR	DELTA PS/Q	SOLIDITY	TOTAL TURNING	ABSOLUTE FLOW ANGLE INLET	ABSOLUTE FLOW ANGLE EXIT	K.&S. EQU. DIFFUSION FACTOR	RELATIVE FLOW ANGLE INLET	RELATIVE FLOW ANGLE EXIT	RELATIVE VELOCITY INLET	RELATIVE VELOCITY EXIT	RELATIVE TEMPERATURE INLET	RELATIVE TEMPERATURE EXIT
0.249	0.044	0.316	2.581	25.67	0.00	33.34	1.476	25.70	0.03	692.7	609.2	526.	532.
0.294	0.041	0.382	2.416	24.98	0.00	33.61	1.510	28.32	3.34	710.6	593.0	528.	534.
0.342	0.042	0.450	2.287	23.97	0.00	34.34	1.558	30.47	6.50	728.5	572.9	530.	536.
0.394	0.043	0.519	2.182	23.10	0.00	35.75	1.619	32.31	9.21	745.9	549.6	532.	538.
0.532	0.053	0.685	1.991	19.53	0.00	41.36	1.827	35.86	16.34	785.5	476.2	536.	543.
0.483	0.044	0.621	1.859	18.88	0.00	38.46	1.723	38.54	19.66	822.3	542.0	541.	547.
0.438	0.038	0.550	1.763	19.20	0.00	35.96	1.636	40.72	21.52	857.9	604.9	545.	552.
0.423	0.036	0.517	1.689	19.08	0.00	34.95	1.604	42.56	23.48	891.3	641.8	549.	556.
0.420	0.035	0.498	1.629	18.74	0.00	34.48	1.591	44.15	25.41	922.8	667.9	553.	560.
0.420	0.035	0.485	1.578	18.30	0.00	34.19	1.585	45.57	27.27	952.5	689.4	557.	563.
0.421	0.036	0.474	1.535	17.89	0.00	34.02	1.581	46.84	28.95	980.7	708.6	561.	567.
0.423	0.038	0.463	1.497	17.53	0.00	33.95	1.579	48.01	30.48	1007.5	726.0	565.	571.

25	0.425	0.042	0.453	1.464	17.22	0.00	33.93	1.578	49.08	31.86	1033.3	742.3	569.	574.
27	0.426	0.045	0.442	1.434	17.00	0.00	33.90	1.576	50.00	33.07	1058.0	758.6	573.	578.
29	0.429	0.051	0.431	1.407	16.87	0.00	34.02	1.576	51.00	34.13	1081.8	772.9	578.	581.
31	0.431	0.055	0.421	1.383	16.64	0.00	34.02	1.574	51.87	35.24	1104.8	787.8	582.	584.
33	0.431	0.059	0.411	1.361	16.25	0.00	33.96	1.571	52.70	36.44	1127.1	802.3	586.	588.
35	0.429	0.064	0.400	1.341	15.36	0.00	33.77	1.567	53.48	38.12	1148.7	816.3	590.	591.
37	0.427	0.068	0.390	1.322	14.32	0.00	33.53	1.560	54.22	39.91	1169.7	830.4	594.	595.
39	0.423	0.072	0.381	1.305	12.98	0.00	33.23	1.552	54.93	41.95	1190.2	844.5	598.	598.
41	0.418	0.077	0.372	1.288	11.02	0.00	32.88	1.542	55.61	44.58	1210.3	857.8	602.	601.

7 AUG 91 LOW NOISE FAN STUDY. BPR = 14:1, RC = 1.382, WAC = 1036.9 INTERSTAGE DATA
STATION NO. 20 PAGE 20
ANNULUS EXIT 20 16:20:15 91/219 COPY 1 OF 1

MASS FLOW RATE 1036.90 FLOW RATE/SQ. FT. 34.66 (CORRECTED) MASS AVE. TOTAL PRESSURE 20.26
CORRECTED FLOW RATE 789.72 ANNULUS AREA 22.78 SQ. FT =3280.8 SQ.IN MASS AVE. TOTAL TEMPERATURE 571.6

RADIUS INCHES	AXIAL VELOCITY	WHIRL VELOCITY	RADIAL VELOCITY	TOTAL PRESSURE	STATIC PRESSURE	TEMPERATURES TOTAL	TEMPERATURES STATIC	ABSOLUTE VELOCITY	ABSOLUTE MACH NO.	MER. VELOCITY	PERCENT SPAN	S.L. NO.
14.595	556.1	391.1	175.59	17.35	13.19	545.5	504.4	702.1	0.638	583.2	0.3	1
15.535	548.5	385.0	156.82	17.49	13.46	546.7	507.3	688.2	0.623	570.5	4.7	3
16.426	534.8	381.3	136.56	17.63	13.76	548.1	510.6	670.9	0.606	552.0	9.0	5
17.281	517.6	383.9	114.73	17.81	14.09	549.8	514.1	654.6	0.589	530.2	13.1	7
19.251	459.1	397.8	49.28	18.30	14.97	554.6	523.7	609.5	0.543	461.7	22.5	9
21.035	507.5	402.2	133.47	18.77	14.82	558.4	521.9	661.2	0.590	524.8	31.0	11
22.502	564.8	405.9	106.10	19.16	14.67	561.5	520.3	703.6	0.629	574.7	38.0	13
23.788	591.3	409.6	84.76	19.50	14.71	564.4	520.7	724.3	0.647	597.4	44.1	15
24.964	606.1	412.9	69.69	19.82	14.82	567.0	521.8	736.7	0.658	610.1	49.7	17
26.060	615.5	415.3	58.66	20.10	14.95	569.4	523.2	744.8	0.664	618.3	54.9	19
27.092	622.4	417.7	50.13	20.37	15.09	571.8	524.8	751.3	0.669	624.5	59.9	21
28.071	628.1	420.5	43.24	20.62	15.22	574.0	526.3	757.1	0.673	629.6	64.5	23
29.004	633.0	423.6	37.57	20.86	15.35	576.3	527.9	762.5	0.677	634.1	69.0	25
29.896	638.1	426.8	32.84	21.10	15.47	578.5	529.4	768.3	0.681	638.9	73.2	27
30.752	642.1	431.5	28.49	21.33	15.58	580.9	531.0	774.1	0.685	642.7	77.3	29
31.577	645.6	434.0	24.77	21.54	15.69	582.9	532.5	778.3	0.688	646.1	81.3	31
32.374	647.4	434.5	21.50	21.69	15.80	584.6	534.0	780.0	0.689	647.8	85.1	33
33.151	643.9	429.2	18.47	21.71	15.90	585.4	535.5	774.0	0.682	644.2	88.8	35
33.911	638.4	421.9	15.85	21.69	16.00	585.8	537.0	765.4	0.674	639.6	92.4	37
34.661	629.1	411.3	13.74	21.59	16.11	585.5	538.5	751.7	0.661	629.2	96.0	39
35.408	611.4	394.9	11.99	21.34	16.22	584.2	540.1	728.0	0.639	611.6	99.5	41

7 AUG 91 LOW NOISE FAN STUDY. BPR = 14:1, RC = 1.382, WAC = 1036.9 INTERSTAGE DATA
STATION NO. 21 PAGE 21
ANNULUS EXIT 21 16:20:15 91/219 COPY 1 OF 1

MASS FLOW RATE 129.60 FLOW RATE/SQ. FT. 34.40 (CORRECTED) MASS AVE. TOTAL PRESSURE 17.78
CORRECTED FLOW RATE 110.25 ANNULUS AREA 3.20 SQ. FT = 461.5 SQ.IN MASS AVE. TOTAL TEMPERATURE 549.5

RADIUS INCHES	AXIAL VELOCITY	WHIRL VELOCITY	RADIAL VELOCITY	TOTAL PRESSURE	STATIC PRESSURE	TEMPERATURES TOTAL	TEMPERATURES STATIC	ABSOLUTE VELOCITY	ABSOLUTE MACH NO.	MER. VELOCITY	PERCENT SPAN	S.L. NO.
14.893	572.4	383.2	167.49	17.35	13.12	545.5	503.6	708.9	0.644	596.4	1.0	1
15.008	571.8	382.6	164.82	17.37	13.15	545.6	503.9	707.5	0.643	595.1	3.6	3
15.121	571.3	382.0	161.78	17.38	13.18	545.8	504.2	706.0	0.641	593.8	6.2	5
15.234	570.8	381.4	158.34	17.40	13.21	545.9	504.6	704.5	0.640	592.4	8.8	7
15.499	569.2	380.1	150.62	17.45	13.29	546.3	505.4	700.8	0.636	588.8	14.8	9
15.754	567.4	379.0	142.70	17.49	13.36	546.7	506.2	697.1	0.632	585.1	20.6	11
16.007	565.0	378.3	135.48	17.53	13.44	547.1	507.0	693.3	0.628	581.0	26.4	13
16.257	562.5	377.7	127.58	17.57	13.51	547.5	507.9	689.4	0.624	576.8	32.1	15
16.503	559.8	377.0	120.26	17.61	13.59	547.9	508.7	685.6	0.620	572.6	37.7	17
16.746	557.1	377.0	112.71	17.66	13.66	548.3	509.5	682.0	0.616	568.4	43.3	19
16.985	554.4	377.5	105.05	17.70	13.74	548.8	510.4	678.9	0.613	564.3	48.7	21
17.221	551.7	379.0	97.66	17.76	13.81	549.3	511.2	676.5	0.610	560.3	54.1	23
17.455	549.0	380.8	89.79	17.82	13.89	549.9	512.0	674.2	0.608	556.3	59.5	25
17.685	546.2	382.6	82.74	17.88	13.96	550.4	512.8	672.0	0.605	552.5	64.7	27
17.913	543.7	384.5	74.83	17.94	14.03	551.0	513.6	670.1	0.603	548.8	69.9	29
18.138	541.2	386.4	66.08	17.99	14.10	551.6	514.4	668.2	0.601	545.2	75.1	31
18.361	538.6	388.5	56.69	18.05	14.16	552.1	515.1	666.5	0.599	541.6	80.2	33
18.582	536.0	390.9	47.84	18.11	14.23	552.8	515.9	665.1	0.597	538.1	85.2	35
18.800	533.5	393.3	38.34	18.17	14.30	553.4	516.7	663.9	0.596	534.8	90.2	37
19.016	530.9	395.8	28.23	18.24	14.36	554.0	517.4	662.8	0.594	531.7	95.1	39
19.230	528.3	398.3	17.62	18.30	14.42	554.6	518.1	661.8	0.593	528.6	100.0	41

7 AUG 91 LOW NOISE FAN STUDY. BPR = 14:1, RC = 1.382, WAC = 1036.9 INTERSTAGE DATA
PAGE 22
STATION NO. 22
STATOR EXIT 1 16:20:15 91/219 COPY 1 OF 1

MASS FLOW RATE 129.60 FLOW RATE/SQ. FT. 34.32 (CORRECTED) MASS AVE. TOTAL PRESSURE 17.56
CORRECTED FLOW RATE 111.65 ANNULUS AREA 3.25 SQ. FT = 468.4 SQ.IN MASS AVE. TOTAL TEMPERATURE 549.5
PRESSURE RATIO 1.195 CUMULATIVE ADIABATIC EFFICIENCY 87.7 STAGE ADIABATIC EFFICIENCY 87.7

RADIUS INCHES	AXIAL VELOCITY	WHIRL VELOCITY	RADIAL VELOCITY	TOTAL PRESSURE	STATIC PRESSURE	TEMPERATURES TOTAL	TEMPERATURES STATIC	ABSOLUTE VELOCITY	ABSOLUTE MACH NO.	MER. VELOCITY	PERCENT SPAN	S.L. NO.
15.578	541.1	-28.6	89.79	16.93	14.35	545.5	520.3	549.3	0.491	548.5	1.6	1
15.688	542.8	-27.9	87.37	16.98	14.38	545.6	520.4	550.5	0.492	549.8	4.2	3
15.796	544.1	-27.2	85.02	17.02	14.42	545.8	520.5	551.3	0.493	550.7	6.7	5
15.904	545.0	-26.5	82.73	17.07	14.45	545.9	520.6	551.9	0.493	551.3	9.3	7
16.157	546.2	-24.8	77.56	17.17	14.53	546.3	520.9	552.2	0.494	551.7	15.2	9
16.398	546.1	-23.1	72.90	17.25	14.62	546.7	521.4	551.4	0.493	550.9	20.9	11
16.638	544.8	-21.4	68.56	17.33	14.70	547.1	521.9	549.5	0.491	549.1	26.5	13
16.875	542.7	-19.7	64.58	17.40	14.78	547.5	522.6	546.9	0.488	546.5	32.1	15
17.108	539.8	-18.0	60.96	17.46	14.86	547.9	523.3	543.5	0.485	543.2	37.6	17
17.338	536.8	-16.4	57.74	17.51	14.94	548.3	524.0	540.1	0.481	539.9	43.0	19
17.566	533.6	-14.8	54.91	17.57	15.02	548.8	524.8	536.7	0.478	536.4	48.4	21
17.791	530.7	-13.2	52.46	17.62	15.10	549.3	525.6	533.5	0.475	533.3	53.7	23
18.014	527.6	-11.7	50.34	17.67	15.18	549.9	526.5	530.1	0.471	530.0	58.9	25
18.235	524.0	-10.1	48.50	17.72	15.25	550.4	527.4	526.3	0.467	526.2	64.1	27
18.454	520.0	-8.7	46.97	17.76	15.33	551.0	528.3	522.2	0.463	522.1	69.3	29
18.672	515.7	-7.2	45.75	17.80	15.40	551.6	529.2	517.8	0.459	517.7	74.4	31
18.888	511.2	-5.8	44.85	17.83	15.47	552.1	530.2	513.2	0.455	513.1	79.5	33
19.104	506.5	-4.4	44.31	17.86	15.54	552.8	531.2	508.5	0.450	508.5	84.6	35
19.318	501.4	-3.0	44.10	17.88	15.61	553.4	532.3	503.3	0.445	503.3	89.6	37
19.532	495.7	-1.6	44.24	17.90	15.67	554.0	533.4	497.7	0.440	497.7	94.6	39
19.746	489.5	-0.3	44.77	17.91	15.74	554.6	534.5	491.5	0.434	491.5	99.7	41

ABSOLUTE INLET	MACH NOS. EXIT	TOTAL TEMP RISE	TOTAL TEMP RATIO	WHEEL SPEED IN	WHEEL SPEED OUT	STAGE PRESSURE RATIO	STAGE ADIABATIC EFFICIENCY	STAGE POLYTROPIC EFFICIENCY	
0.644	0.491	26.78	1.052	0.0	0.0	1.152	79.8	80.2	1
0.643	0.492	26.94	1.052	0.0	0.0	1.155	81.1	81.4	3
0.641	0.493	27.10	1.052	0.0	0.0	1.158	82.2	82.6	5
0.640	0.493	27.26	1.053	0.0	0.0	1.162	83.2	83.6	7
0.636	0.494	27.64	1.053	0.0	0.0	1.168	85.3	85.6	9
0.632	0.493	28.02	1.054	0.0	0.0	1.174	86.9	87.2	11
0.628	0.491	28.41	1.055	0.0	0.0	1.179	88.1	88.4	13
0.624	0.488	28.81	1.056	0.0	0.0	1.184	89.0	89.2	15
0.620	0.485	29.19	1.056	0.0	0.0	1.188	89.6	89.8	17
0.616	0.481	29.62	1.057	0.0	0.0	1.192	90.0	90.3	19
0.613	0.478	30.09	1.058	0.0	0.0	1.195	90.2	90.5	21
0.610	0.475	30.63	1.059	0.0	0.0	1.199	90.2	90.5	23
0.608	0.471	31.19	1.060	0.0	0.0	1.203	90.1	90.4	25
0.605	0.467	31.75	1.061	0.0	0.0	1.206	89.8	90.0	27
0.603	0.463	32.32	1.062	0.0	0.0	1.209	89.3	89.6	29
0.601	0.459	32.89	1.063	0.0	0.0	1.211	88.7	89.0	31
0.599	0.455	33.47	1.065	0.0	0.0	1.213	88.0	88.4	33
0.597	0.450	34.08	1.066	0.0	0.0	1.215	87.2	87.6	35
0.596	0.445	34.70	1.067	0.0	0.0	1.217	86.2	86.6	37
0.594	0.440	35.32	1.068	0.0	0.0	1.218	85.1	85.6	39
0.593	0.434	35.93	1.069	0.0	0.0	1.219	83.9	84.4	41

S.L. NO.	DIFFUSION FACTOR	OMEGA BAR	DELTA PS/Q	SOLIDITY	TOTAL TURNING	ABSOLUTE FLOW ANGLE INLET	ABSOLUTE FLOW ANGLE EXIT	K.&S. EQU. DIFFUSION FACTOR
1	0.394	0.100	0.291	1.682	35.70	32.72	-2.98	1.480
3	0.392	0.093	0.293	1.670	35.64	32.74	-2.90	1.478
5	0.391	0.086	0.294	1.658	35.58	32.75	-2.83	1.478
7	0.389	0.080	0.296	1.647	35.52	32.77	-2.75	1.478
9	0.387	0.067	0.300	1.620	35.42	32.85	-2.57	1.478
11	0.387	0.057	0.304	1.595	35.34	32.94	-2.40	1.481
13	0.388	0.049	0.308	1.571	35.30	33.07	-2.23	1.485
15	0.390	0.043	0.313	1.548	35.28	33.21	-2.06	1.490
17	0.393	0.039	0.317	1.526	35.26	33.36	-1.90	1.496
19	0.397	0.036	0.321	1.505	35.29	33.55	-1.74	1.502
21	0.401	0.035	0.324	1.485	35.36	33.78	-1.58	1.510
23	0.406	0.036	0.327	1.466	35.49	34.08	-1.42	1.518
25	0.412	0.037	0.329	1.447	35.65	34.39	-1.26	1.526

27	0.418	0.040	0.331	1.429	35.81	34.71	-1.10	1.536
29	0.426	0.045	0.333	1.412	35.97	35.02	-0.95	1.547
31	0.433	0.050	0.335	1.395	36.13	35.33	-0.80	1.558
33	0.442	0.057	0.337	1.379	36.29	35.65	-0.64	1.570
35	0.451	0.066	0.338	1.363	36.43	35.99	-0.49	1.583
37	0.460	0.076	0.338	1.347	36.67	36.33	-0.34	1.593
39	0.471	0.087	0.339	1.332	36.85	36.66	-0.19	1.614
41	0.483	0.100	0.339	1.318	37.04	37.00	-0.04	1.631

7 AUG 91 LOW NOISE FAN STUDY. BPR = 14:1, RC = 1.382, WAC = 1036.9 INTERSTAGE DATA
STATION NO. 23 PAGE 23
ANNULUS EXIT 23 16:20:15 91/219 COPY 1 OF 1

MASS FLOW RATE 129.60 FLOW RATE/SQ. FT. 34.68 (CORRECTED) MASS AVE. TOTAL PRESSURE 17.56
CORRECTED FLOW RATE 111.65 ANNULUS AREA 3.22 SQ. FT = 463.6 SQ.IN MASS AVE. TOTAL TEMPERATURE 549.5

RADIUS INCHES	AXIAL VELOCITY	WHIRL VELOCITY	RADIAL VELOCITY	TOTAL PRESSURE	STATIC PRESSURE	TEMPERATURES TOTAL	TEMPERATURES STATIC	ABSOLUTE VELOCITY	ABSOLUTE MACH NO.	MER. VELOCITY	PERCENT SPAN	S.L. NO.
15.687	570.1	-28.4	60.98	16.93	14.13	545.5	518.0	574.1	0.514	573.4	1.1	1
15.792	570.6	-27.7	57.40	16.98	14.17	545.6	518.2	574.1	0.514	573.5	3.7	3
15.897	570.7	-27.0	53.95	17.02	14.21	545.8	518.3	573.9	0.514	573.3	6.2	5
16.001	570.6	-26.3	50.64	17.07	14.26	545.9	518.5	573.5	0.514	572.9	8.6	7
16.245	569.3	-24.6	43.27	17.17	14.36	546.3	519.1	571.5	0.512	570.9	14.5	9
16.478	566.9	-23.0	36.73	17.25	14.46	546.7	519.8	568.5	0.509	568.1	20.1	11
16.712	563.5	-21.3	30.72	17.33	14.56	547.1	520.5	564.7	0.505	564.3	25.7	13
16.942	559.3	-19.6	25.26	17.40	14.66	547.5	521.3	560.2	0.500	559.8	31.2	15
17.169	554.4	-18.0	20.31	17.46	14.76	547.9	522.2	555.1	0.495	554.8	36.7	17
17.395	549.5	-16.3	15.82	17.51	14.86	548.3	523.1	549.9	0.490	549.7	42.1	19
17.618	544.4	-14.7	11.77	17.57	14.95	548.8	524.0	544.8	0.485	544.6	47.4	21
17.840	539.6	-13.2	8.11	17.62	15.04	549.3	525.0	539.9	0.481	539.7	52.8	23
18.060	534.6	-11.6	4.80	17.67	15.14	549.9	526.0	534.7	0.476	534.6	58.0	25
18.278	529.0	-10.1	1.81	17.72	15.23	550.4	527.1	529.1	0.470	529.0	63.3	27
18.495	523.0	-8.6	-0.89	17.76	15.32	551.0	528.2	523.1	0.464	523.0	68.5	29
18.712	516.6	-7.2	-3.34	17.80	15.41	551.6	529.3	516.7	0.458	516.6	73.7	31
18.928	509.8	-5.8	-5.56	17.83	15.50	552.1	530.5	509.9	0.452	509.8	78.8	33
19.143	502.7	-4.4	-7.56	17.86	15.59	552.8	531.7	502.8	0.445	502.8	84.0	35
19.359	494.9	-3.0	-9.36	17.88	15.68	553.4	533.0	495.0	0.437	495.0	89.2	37
19.575	486.3	-1.6	-11.00	17.90	15.77	554.0	534.3	486.4	0.429	486.4	94.4	39
19.791	476.8	-0.3	-12.49	17.91	15.86	554.6	535.7	476.9	0.420	476.9	99.6	41

7 AUG 91 LOW NOISE FAN STUDY. BPR = 14:1, RC = 1.382, WAC = 1036.9 INTERSTAGE DATA
PAGE 24
STATION NO. 24
ROTOR EXIT 2 16:20:15 91/219 COPY 1 OF 1

MASS FLOW RATE 129.60 FLOW RATE/SQ. FT. 33.67 (CORRECTED) MASS AVE. TOTAL PRESSURE 20.50
CORRECTED FLOW RATE 97.87 ANNULUS AREA 2.91 SQ. FT = 418.5 SQ.IN MASS AVE. TOTAL TEMPERATURE 575.6
CORRECTED TIP SPEED 542. FT/SEC ROTOR ADIABATIC EFFICIENCY 95.5
PRESSURE RATIO 1.168 CUMULATIVE ADIABATIC EFFICIENCY 91.0

RADIUS INCHES	AXIAL VELOCITY	WHIRL VELOCITY	RADIAL VELOCITY	TOTAL PRESSURE	STATIC PRESSURE	TEMPERATURES TOTAL	TEMPERATURES STATIC	ABSOLUTE VELOCITY	ABSOLUTE MACH NO.	MER. VELOCITY	PERCENT SPAN	S.L. NO.
15.770	614.6	438.3	-98.31	20.81	15.36	579.9	531.7	761.2	0.673	622.4	1.0	1
15.863	612.6	424.7	-97.32	20.77	15.44	579.2	532.2	751.7	0.665	620.2	3.4	3
15.955	610.1	412.1	-96.33	20.73	15.52	578.6	532.7	742.5	0.656	617.7	5.8	5
16.047	607.4	400.4	-95.35	20.69	15.60	578.0	533.2	733.8	0.648	614.9	8.2	7
16.265	600.1	375.7	-93.09	20.62	15.78	576.8	534.4	714.1	0.630	607.3	13.8	9
16.475	592.2	355.4	-91.03	20.56	15.94	575.9	535.5	696.7	0.614	599.2	19.3	11
16.687	583.8	338.2	-89.11	20.52	16.09	575.2	536.7	680.6	0.599	590.6	24.7	13
16.898	575.3	323.7	-87.36	20.48	16.23	574.7	537.8	665.9	0.586	581.9	30.2	15
17.107	566.9	311.6	-85.80	20.45	16.37	574.3	538.9	652.5	0.573	573.3	35.6	17
17.316	558.8	300.9	-84.47	20.44	16.49	574.1	539.9	640.3	0.562	565.2	41.0	19
17.525	551.2	291.5	-83.35	20.42	16.61	573.9	541.0	629.1	0.552	557.5	46.4	21
17.732	544.2	282.8	-82.46	20.42	16.72	573.9	542.0	618.8	0.542	550.4	51.7	23
17.939	537.4	275.5	-81.74	20.42	16.82	574.0	543.1	609.4	0.533	543.6	57.1	25
18.145	530.8	269.6	-81.17	20.42	16.92	574.2	544.2	600.8	0.525	536.9	62.4	27
18.351	524.2	264.9	-80.78	20.43	17.01	574.5	545.3	592.9	0.518	530.4	67.7	29
18.556	517.8	261.4	-80.57	20.44	17.10	574.9	546.4	585.6	0.511	524.0	73.0	31
18.761	511.5	259.0	-80.57	20.46	17.19	575.4	547.5	578.9	0.505	517.8	78.3	33
18.966	505.3	257.4	-80.82	20.48	17.27	576.0	548.7	572.8	0.499	511.8	83.6	35
19.170	499.1	256.9	-81.30	20.50	17.36	576.7	550.0	567.2	0.493	505.7	88.9	37
19.375	492.8	257.6	-82.07	20.52	17.44	577.5	551.2	562.1	0.488	499.6	94.2	39
19.579	486.3	259.4	-83.15	20.55	17.51	578.4	552.6	557.3	0.484	493.3	99.5	41

RELATIVE INLET	MACH NOS. EXIT	TOTAL TEMP RISE	TOTAL TEMP RATIO	WHEEL SPEED IN	WHEEL SPEED OUT	ROTOR PRESSURE RATIO	ROTOR ADIABATIC EFFICIENCY	ROTOR POLYTROPIC EFFICIENCY	
0.664	0.551	34.49	1.063	441.8	444.2	1.230	96.2	96.3	1
0.666	0.549	33.63	1.062	444.8	446.8	1.223	96.2	96.3	3
0.667	0.547	32.84	1.060	447.7	449.4	1.218	96.2	96.3	5
0.668	0.545	32.10	1.059	450.7	452.0	1.212	96.2	96.3	7
0.669	0.541	30.52	1.056	457.5	458.1	1.201	96.1	96.2	9
0.669	0.537	29.23	1.053	464.1	464.0	1.192	96.1	96.2	11
0.669	0.533	28.13	1.051	470.7	470.0	1.184	96.1	96.2	13
0.669	0.529	27.21	1.050	477.2	475.9	1.177	96.1	96.2	15
0.668	0.526	26.44	1.048	483.6	481.8	1.172	96.0	96.1	17
0.666	0.523	25.76	1.047	489.9	487.7	1.167	96.0	96.1	19
0.665	0.520	25.17	1.046	496.2	493.6	1.163	96.0	96.1	21
0.664	0.518	24.61	1.045	502.5	499.4	1.159	95.9	96.0	23
0.663	0.517	24.15	1.044	508.7	505.3	1.155	95.8	95.9	25
0.662	0.515	23.80	1.043	514.8	511.1	1.152	95.7	95.8	27
0.661	0.513	23.54	1.043	520.9	516.9	1.150	95.5	95.6	29
0.659	0.511	23.37	1.042	527.0	522.6	1.149	95.3	95.4	31
0.657	0.509	23.29	1.042	533.1	528.4	1.147	95.0	95.1	33
0.655	0.507	23.27	1.042	539.2	534.2	1.147	94.7	94.8	35
0.653	0.504	23.36	1.042	545.2	539.9	1.146	94.3	94.4	37
0.650	0.501	23.54	1.042	551.3	545.7	1.147	93.8	94.0	39
0.647	0.498	23.83	1.043	557.4	551.5	1.148	93.4	93.5	41

S.L. NO.	DIFFUSION FACTOR	OMEGA BAR	DELTA PS/Q	SOLIDITY	TOTAL TURNING	ABSOLUTE FLOW ANGLE INLET	ABSOLUTE FLOW ANGLE EXIT	K.&S. EQU. DIFFUSION FACTOR	RELATIVE FLOW ANGLE INLET	RELATIVE FLOW ANGLE EXIT	RELATIVE VELOCITY INLET	RELATIVE VELOCITY EXIT	RELATIVE TEMPERATURE INLET	RELATIVE TEMPERATURE EXIT
1	0.385	0.031	0.252	1.405	38.81	-2.83	35.15	1.557	39.35	0.54	741.5	622.4	564.	564.
3	0.384	0.030	0.259	1.393	37.45	-2.76	34.40	1.559	39.49	2.04	743.0	620.6	564.	564.
5	0.383	0.029	0.265	1.381	36.18	-2.70	33.71	1.561	39.63	3.45	744.3	618.8	564.	565.
7	0.382	0.029	0.271	1.369	34.99	-2.63	33.07	1.562	39.78	4.80	745.4	617.0	565.	565.
9	0.380	0.028	0.282	1.342	32.45	-2.47	31.74	1.564	40.18	7.73	747.3	612.9	566.	566.
11	0.378	0.027	0.292	1.317	30.34	-2.32	30.68	1.564	40.61	10.27	748.3	608.9	566.	566.
13	0.377	0.026	0.300	1.293	28.51	-2.16	29.80	1.564	41.08	12.58	748.7	605.1	567.	567.
15	0.377	0.025	0.307	1.269	26.93	-2.01	29.09	1.563	41.58	14.66	748.5	601.5	568.	568.
17	0.377	0.025	0.313	1.246	25.58	-1.85	28.52	1.561	42.11	16.54	747.9	598.1	569.	569.
19	0.377	0.024	0.317	1.224	24.36	-1.70	28.03	1.559	42.64	18.29	747.3	595.2	570.	569.
21	0.376	0.024	0.320	1.203	23.25	-1.55	27.61	1.556	43.18	19.92	746.7	593.0	570.	570.
23	0.375	0.024	0.322	1.182	22.21	-1.40	27.20	1.552	43.69	21.48	746.4	591.5	571.	571.

25	0.374	0.024	0.324	1.162	21.31	-1.25	26.87	1.548	44.22	22.91	746.0	590.2	572.
27	0.374	0.024	0.324	1.142	20.56	-1.10	26.66	1.545	44.78	24.22	745.3	588.7	573.
29	0.374	0.025	0.325	1.123	19.95	-0.95	26.54	1.542	45.36	25.41	744.3	587.2	574.
31	0.375	0.026	0.325	1.104	19.46	-0.80	26.52	1.540	45.96	26.49	743.2	585.5	575.
33	0.377	0.028	0.324	1.086	19.10	-0.65	26.58	1.539	46.58	27.49	741.8	583.7	576.
35	0.379	0.030	0.324	1.068	18.82	-0.50	26.70	1.538	47.23	28.41	740.4	581.8	577.
37	0.382	0.032	0.323	1.051	18.68	-0.35	26.93	1.539	47.92	29.24	738.6	579.5	578.
39	0.386	0.035	0.322	1.034	18.69	-0.19	27.27	1.542	48.66	29.97	736.5	576.7	579.
41	0.392	0.039	0.321	1.017	18.84	-0.04	27.73	1.546	49.47	30.63	733.9	573.3	580.

7 AUG 91 LOW NOISE FAN STUDY. BPR = 14:1, RC = 1.382, WAC = 1036.9 INTERSTAGE DATA
STATION NO. 25 PAGE 25
ANNULUS EXIT 25 16:20:15 91/219 COPY 1 OF 1

MASS FLOW RATE 129.60 FLOW RATE/SQ. FT. 34.64 (CORRECTED) MASS AVE. TOTAL PRESSURE 20.50
CORRECTED FLOW RATE 97.87 ANNULUS AREA 2.83 SQ. FT = 406.9 SQ.IN MASS AVE. TOTAL TEMPERATURE 575.6

RADIUS INCHES	AXIAL VELOCITY	WHIRL VELOCITY	RADIAL VELOCITY	TOTAL PRESSURE	STATIC PRESSURE	TEMPERATURES TOTAL	TEMPERATURES STATIC	ABSOLUTE VELOCITY	ABSOLUTE MACH NO.	MER. VELOCITY	PERCENT SPAN	S.L. NO.
15.641	620.7	441.9	-137.60	20.81	15.19	579.9	530.0	774.3	0.686	635.8	1.1	1
15.728	618.7	428.4	-137.98	20.77	15.27	579.2	530.5	765.1	0.678	633.9	3.5	3
15.814	616.3	415.8	-138.23	20.73	15.35	578.6	531.0	756.2	0.669	631.6	5.9	5
15.899	613.6	404.1	-138.38	20.69	15.43	578.0	531.5	747.6	0.661	629.0	8.3	7
16.102	606.1	379.5	-138.37	20.62	15.60	576.8	532.7	728.4	0.644	621.7	13.9	9
16.298	598.1	359.3	-138.03	20.56	15.76	575.9	533.8	711.2	0.628	613.8	19.3	11
16.495	589.5	342.1	-137.43	20.52	15.92	575.2	535.0	695.3	0.613	605.3	24.8	13
16.692	580.8	327.7	-136.68	20.48	16.06	574.7	536.1	680.7	0.600	596.7	30.2	15
16.887	572.1	315.7	-135.81	20.45	16.19	574.3	537.2	667.4	0.587	588.0	35.7	17
17.082	563.9	305.1	-134.95	20.44	16.32	574.1	538.3	655.2	0.576	579.8	41.1	19
17.276	556.2	295.7	-134.11	20.42	16.44	573.9	539.4	644.0	0.566	572.1	46.4	21
17.470	549.1	287.1	-133.35	20.42	16.55	573.9	540.5	633.8	0.556	565.1	51.8	23
17.663	542.4	279.8	-132.59	20.42	16.65	574.0	541.5	624.5	0.547	558.3	57.1	25
17.855	535.8	273.9	-131.82	20.42	16.75	574.2	542.6	616.1	0.539	551.8	62.5	27
18.047	529.6	269.4	-131.05	20.43	16.84	574.5	543.7	608.5	0.532	545.6	67.8	29
18.239	523.6	266.0	-130.29	20.44	16.93	574.9	544.8	601.6	0.526	539.6	73.1	31
18.429	518.0	263.7	-129.57	20.46	17.01	575.4	545.9	595.5	0.520	533.9	78.4	33
18.620	512.7	262.1	-128.91	20.48	17.09	576.0	547.0	590.1	0.515	528.7	83.6	35
18.809	507.7	261.8	-128.27	20.50	17.16	576.7	548.2	585.5	0.510	523.6	88.9	37
18.999	502.9	262.7	-127.64	20.52	17.23	577.5	549.4	581.5	0.506	518.8	94.1	39
19.187	498.2	264.7	-127.04	20.55	17.30	578.4	550.6	578.3	0.503	514.2	99.4	41

7 AUG 91 LOW NOISE FAN STUDY. BPR = 14:1, RC = 1.382, WAC = 1036.9 INTERSTAGE DATA
PAGE 26
STATION NO. 26
ANNULUS EXIT 26 16:20:15 91/219 COPY 1 OF 1

MASS FLOW RATE 129.60 FLOW RATE/SQ. FT. 35.27 (CORRECTED) MASS AVE. TOTAL PRESSURE 20.50
CORRECTED FLOW RATE 97.87 ANNULUS AREA 2.77 SQ. FT = 399.6 SQ.IN MASS AVE. TOTAL TEMPERATURE 575.6

RADIUS INCHES	AXIAL VELOCITY	WHIRL VELOCITY	RADIAL VELOCITY	TOTAL PRESSURE	STATIC PRESSURE	TEMPERATURES TOTAL	TEMPERATURES STATIC	ABSOLUTE VELOCITY	ABSOLUTE MACH NO.	MER. VELOCITY	PERCENT SPAN	S.L. NO.
15.478	629.6	446.6	-197.29	20.81	14.90	579.9	527.1	796.7	0.708	659.8	1.1	1
15.558	627.1	433.1	-198.96	20.77	14.98	579.2	527.6	787.6	0.699	657.9	3.6	3
15.637	624.2	420.5	-200.33	20.73	15.06	578.6	528.1	778.8	0.691	655.5	5.9	5
15.715	621.1	408.8	-201.46	20.69	15.14	578.0	528.6	770.4	0.683	652.9	8.3	7
15.902	612.8	384.3	-203.28	20.62	15.31	576.8	529.8	751.4	0.666	645.7	13.9	9
16.082	604.2	364.1	-204.14	20.56	15.48	575.9	531.0	734.4	0.650	637.8	19.4	11
16.262	595.3	347.0	-204.32	20.52	15.63	575.2	532.2	718.7	0.635	629.4	24.8	13
16.442	586.4	332.7	-203.98	20.48	15.78	574.7	533.4	704.4	0.622	620.8	30.3	15
16.621	577.6	320.7	-203.24	20.45	15.91	574.3	534.5	691.2	0.610	612.3	35.7	17
16.800	569.4	310.2	-202.29	20.44	16.04	574.1	535.6	679.2	0.599	604.3	41.1	19
16.977	561.7	300.9	-201.19	20.42	16.16	573.9	536.8	668.2	0.588	596.7	46.4	21
17.154	554.7	292.4	-200.00	20.42	16.27	573.9	537.9	658.2	0.579	589.7	51.8	23
17.331	548.1	285.1	-198.65	20.42	16.38	574.0	539.0	648.9	0.570	582.9	57.1	25
17.506	541.6	279.4	-197.10	20.42	16.48	574.2	540.1	640.5	0.562	576.4	62.4	27
17.682	535.5	275.0	-195.41	20.43	16.57	574.5	541.2	632.9	0.555	570.0	67.7	29
17.857	529.6	271.7	-193.57	20.44	16.66	574.9	542.3	625.9	0.548	563.8	73.0	31
18.031	523.9	269.5	-191.61	20.46	16.75	575.4	543.5	619.5	0.542	557.8	78.3	33
18.205	518.6	268.1	-189.56	20.48	16.83	576.0	544.7	613.8	0.536	552.1	83.5	35
18.379	513.3	268.0	-187.34	20.50	16.91	576.7	545.9	608.6	0.531	546.5	88.8	37
18.552	508.2	269.0	-184.97	20.52	16.99	577.5	547.2	604.0	0.527	540.8	94.0	39
18.726	503.1	271.2	-182.42	20.55	17.06	578.4	548.5	599.9	0.523	535.1	99.3	41

7 AUG 91 LOW NOISE FAN STUDY. BPR = 14:1, RC = 1.382, WAC = 1036.9 INTERSTAGE DATA
PAGE 27
STATION NO. 27
STATOR EXIT 2 16:20:15 91/219 COPY 1 OF 1

MASS FLOW RATE 129.60 FLOW RATE/SQ. FT. 35.31 (CORRECTED) MASS AVE. TOTAL PRESSURE 20.32
CORRECTED FLOW RATE 98.76 ANNULUS AREA 2.80 SQ. FT = 402.8 SQ.IN MASS AVE. TOTAL TEMPERATURE 575.6
PRESSURE RATIO 1.157 CUMULATIVE ADIABATIC EFFICIENCY 88.4 STAGE ADIABATIC EFFICIENCY 89.9

RADIUS INCHES	AXIAL VELOCITY	WHIRL VELOCITY	RADIAL VELOCITY	TOTAL PRESSURE	STATIC PRESSURE	TEMPERATURES TOTAL	TEMPERATURES STATIC	ABSOLUTE VELOCITY	ABSOLUTE MACH NO.	MER. VELOCITY	PERCENT SPAN	S.L. NO.
14.047	550.6	0.0	-367.95	20.32	16.18	579.9	543.4	662.2	0.579	662.2	1.3	1
14.133	545.0	0.0	-361.32	20.32	16.27	579.2	543.7	653.9	0.572	653.9	3.6	3
14.220	539.8	0.0	-355.12	20.32	16.36	578.6	543.9	646.2	0.565	646.2	5.9	5
14.306	535.0	0.0	-349.32	20.32	16.43	578.0	544.0	638.9	0.559	638.9	8.2	7
14.512	524.5	0.0	-336.84	20.32	16.60	576.8	544.5	623.4	0.545	623.4	13.7	9
14.713	515.7	0.0	-326.22	20.32	16.74	575.9	544.9	610.2	0.533	610.2	19.0	11
14.916	507.7	0.0	-316.73	20.32	16.86	575.2	545.4	598.4	0.523	598.4	24.4	13
15.119	500.5	0.0	-308.29	20.32	16.97	574.7	545.9	587.9	0.513	587.9	29.8	15
15.322	494.0	0.0	-300.70	20.32	17.07	574.3	546.5	578.3	0.505	578.3	35.2	17
15.524	488.0	0.0	-293.85	20.32	17.16	574.1	547.0	569.6	0.497	569.6	40.6	19
15.725	482.4	0.0	-287.62	20.32	17.24	573.9	547.7	561.6	0.490	561.6	46.0	21
15.926	477.1	0.0	-281.91	20.32	17.32	573.9	548.4	554.2	0.483	554.2	51.4	23
16.126	472.0	0.0	-276.63	20.32	17.39	574.0	549.1	547.1	0.476	547.1	56.7	25
16.325	467.1	0.0	-271.76	20.32	17.46	574.2	549.9	540.4	0.470	540.4	62.0	27
16.524	462.4	0.0	-267.20	20.32	17.53	574.5	550.8	534.0	0.464	534.0	67.3	29
16.723	457.7	0.0	-262.94	20.32	17.59	574.9	551.7	527.9	0.458	527.9	72.6	31
16.921	453.1	0.0	-258.92	20.32	17.65	575.4	552.8	521.8	0.453	521.8	77.9	33
17.118	448.5	0.0	-255.12	20.32	17.71	576.0	553.9	516.0	0.447	516.0	83.2	35
17.316	443.9	0.0	-251.50	20.32	17.77	576.7	555.1	510.2	0.442	510.2	88.4	37
17.513	439.2	0.0	-248.03	20.32	17.83	577.5	556.4	504.6	0.436	504.4	93.7	39
17.709	434.5	0.0	-244.69	20.32	17.88	578.4	557.7	498.6	0.431	498.6	98.9	41

ABSOLUTE INLET	MACH NOS. EXIT	TOTAL TEMP RISE	TOTAL TEMP RATIO	WHEEL SPEED IN	WHEEL SPEED OUT	STAGE PRESSURE RATIO	STAGE ADIABATIC EFFICIENCY	STAGE POLYTROPIC EFFICIENCY	
0.708	0.579	34.49	1.063	0.0	0.0	1.200	84.7	85.1	1
0.699	0.572	33.63	1.062	0.0	0.0	1.197	85.4	85.8	3
0.691	0.565	32.84	1.060	0.0	0.0	1.193	86.1	86.4	5
0.683	0.559	32.10	1.059	0.0	0.0	1.190	86.7	87.1	7
0.666	0.545	30.52	1.056	0.0	0.0	1.183	88.2	88.4	9
0.650	0.533	29.23	1.053	0.0	0.0	1.177	89.4	89.6	11
0.635	0.523	28.13	1.051	0.0	0.0	1.172	90.4	90.6	13
0.622	0.513	27.21	1.050	0.0	0.0	1.168	91.2	91.4	15
0.610	0.505	26.44	1.048	0.0	0.0	1.164	91.8	92.0	17
0.599	0.497	25.76	1.047	0.0	0.0	1.160	92.2	92.4	19
0.588	0.490	25.17	1.046	0.0	0.0	1.157	92.5	92.7	21
0.579	0.483	24.61	1.045	0.0	0.0	1.153	92.6	92.7	23
0.570	0.476	24.15	1.044	0.0	0.0	1.149	92.4	92.6	25
0.562	0.470	23.80	1.043	0.0	0.0	1.147	92.1	92.3	27
0.555	0.464	23.54	1.043	0.0	0.0	1.144	91.6	91.8	29
0.548	0.458	23.37	1.042	0.0	0.0	1.142	90.9	91.1	31
0.542	0.453	23.29	1.042	0.0	0.0	1.139	90.1	90.3	33
0.536	0.447	23.27	1.042	0.0	0.0	1.138	89.1	89.3	35
0.531	0.442	23.36	1.042	0.0	0.0	1.136	88.0	88.2	37
0.527	0.436	23.54	1.042	0.0	0.0	1.135	86.7	87.0	39
0.523	0.431	23.83	1.043	0.0	0.0	1.134	85.3	85.6	41

S.L. NO.	DIFFUSION FACTOR	OMEGA BAR	DELTA PS/Q	SOLIDITY	TOTAL TURNING	ABSOLUTE FLOW ANGLE INLET	ABSOLUTE FLOW ANGLE EXIT	K.&S. EQU. DIFFUSION FACTOR
1	0.363	0.084	0.217	1.510	34.09	34.09	0.00	1.428
3	0.362	0.078	0.223	1.501	33.35	33.35	0.00	1.429
5	0.360	0.073	0.229	1.493	32.68	32.68	0.00	1.431
7	0.358	0.068	0.233	1.485	32.05	32.05	0.00	1.431
9	0.353	0.057	0.242	1.466	30.76	30.76	0.00	1.431
11	0.348	0.048	0.248	1.448	29.72	29.72	0.00	1.430
13	0.344	0.041	0.252	1.430	28.87	28.87	0.00	1.428
15	0.340	0.035	0.255	1.412	28.19	28.19	0.00	1.427
17	0.336	0.031	0.256	1.395	27.64	27.64	0.00	1.425
19	0.333	0.027	0.256	1.379	27.17	27.17	0.00	1.424
21	0.331	0.026	0.255	1.363	26.76	26.76	0.00	1.422
23	0.329	0.025	0.253	1.348	26.37	26.37	0.00	1.422
25	0.328	0.025	0.252	1.332	26.07	26.07	0.00	1.421

27	.328	0.027	0.249	1.318	25.86	25.86	0.00	1.422
29	0.328	0.030	0.247	1.303	25.75	25.75	0.00	1.424
31	0.331	0.033	0.245	1.289	25.73	25.73	0.00	1.427
33	0.334	0.038	0.243	1.275	25.79	25.79	0.00	1.431
35	0.338	0.044	0.241	1.262	25.90	25.90	0.00	1.436
37	0.343	0.051	0.239	1.249	26.12	26.12	0.00	1.443
39	0.350	0.059	0.237	1.236	26.44	26.44	0.00	1.452
41	0.359	0.068	0.235	1.223	26.87	26.87	0.00	1.462

7 AUG 91 LOW NOISE FAN STUDY. BPR = 14:1, RC = 1.382, WAC = 1036.9 INTERSTAGE DATA
STATION NO. 28 PAGE 28
ANNULUS EXIT 28 16:20:15 91/219 COPY 1 OF 1

MASS FLOW RATE 129.60 FLOW RATE/SQ. FT. 36.22 (CORRECTED) MASS AVE. TOTAL PRESSURE 20.32
CORRECTED FLOW RATE 98.76 ANNULUS AREA 2.73 SQ. FT = 392.7 SQ.IN MASS AVE. TOTAL TEMPERATURE 575.6

RADIUS INCHES	AXIAL VELOCITY	WHIRL VELOCITY	RADIAL VELOCITY	TOTAL PRESSURE	STATIC PRESSURE	TEMPERATURES TOTAL	TEMPERATURES STATIC	ABSOLUTE VELOCITY	ABSOLUTE MACH NO.	MER. VELOCITY	PERCENT SPAN	S.L. NO.
13.799	526.9	0.0	-401.22	20.32	16.18	579.9	543.4	662.3	0.580	662.3	1.5	1
13.874	522.5	0.0	-394.10	20.32	16.27	579.2	543.6	654.5	0.573	654.5	3.8	3
13.949	518.4	0.0	-387.43	20.32	16.34	578.6	543.7	647.2	0.566	647.2	6.1	5
14.024	514.7	0.0	-381.21	20.32	16.42	578.0	543.9	640.5	0.560	640.5	8.4	7
14.204	506.7	0.0	-367.82	20.32	16.57	576.8	544.2	626.2	0.548	626.2	13.9	9
14.379	500.2	0.0	-356.52	20.32	16.69	575.9	544.5	614.3	0.537	614.3	19.3	11
14.557	494.7	0.0	-346.57	20.32	16.80	575.2	544.8	604.0	0.528	604.0	24.8	13
14.734	489.9	0.0	-337.90	20.32	16.90	574.7	545.2	595.1	0.520	595.1	30.3	15
14.911	485.7	0.0	-330.33	20.32	16.98	574.3	545.6	587.4	0.513	587.4	35.7	17
15.087	482.1	0.0	-323.73	20.32	17.05	574.1	546.0	580.7	0.507	580.7	41.1	19
15.263	478.9	0.0	-318.00	20.32	17.11	573.9	546.4	574.9	0.502	574.9	46.5	21
15.438	476.1	0.0	-313.03	20.32	17.16	573.9	546.9	569.8	0.497	569.8	51.9	23
15.612	473.5	0.0	-308.74	20.32	17.21	574.0	547.4	565.2	0.493	565.2	57.3	25
15.785	471.1	0.0	-305.11	20.32	17.25	574.2	548.0	561.3	0.489	561.3	62.6	27
15.957	468.9	0.0	-302.04	20.32	17.29	574.5	548.6	557.8	0.486	557.8	67.9	29
16.129	466.8	0.0	-299.51	20.32	17.32	574.9	549.3	554.6	0.483	554.6	73.2	31
16.299	464.8	0.0	-297.48	20.32	17.35	575.4	550.1	551.9	0.480	551.9	78.4	33
16.469	462.9	0.0	-295.91	20.32	17.38	576.0	550.9	549.4	0.478	549.4	83.6	35
16.637	461.0	0.0	-294.78	20.32	17.40	576.7	551.8	547.2	0.475	547.2	88.8	37
16.804	459.2	0.0	-294.04	20.32	17.43	577.5	552.8	545.3	0.473	545.3	94.0	39
16.971	457.3	0.0	-293.70	20.32	17.45	578.4	553.9	543.5	0.471	543.5	99.1	41

7 AUG 91 LOW NOISE FAN STUDY. BPR = 14:1, RC = 1.382, WAC = 1036.9 INTERSTAGE DATA
STATION NO. 29 PAGE 29
ANNULUS EXIT 29 16:20:15 91/219 COPY 1 OF 1

MASS FLOW RATE 129.60 FLOW RATE/SQ. FT. 35.23 (CORRECTED) MASS AVE. TOTAL PRESSURE 20.32
CORRECTED FLOW RATE 98.76 ANNULUS AREA 2.80 SQ. FT = 403.6 SQ.IN MASS AVE. TOTAL TEMPERATURE 575.5

RADIUS INCHES	AXIAL VELOCITY	WHIRL VELOCITY	RADIAL VELOCITY	TOTAL PRESSURE	STATIC PRESSURE	TEMPERATURES TOTAL	TEMPERATURES STATIC	ABSOLUTE VELOCITY	ABSOLUTE MACH NO.	MER. VELOCITY	PERCENT SPAN	S.L. NO.
12.814	422.8	0.0	-423.81	20.32	16.89	579.9	550.1	598.6	0.521	598.6	3.8	1
12.900	425.8	0.0	-416.38	20.32	16.92	579.2	549.7	595.6	0.518	595.6	6.3	3
12.986	428.6	0.0	-409.35	20.32	16.94	578.6	549.4	592.7	0.516	592.7	8.7	5
13.071	431.3	0.0	-402.73	20.32	16.97	578.0	549.0	590.1	0.514	590.1	11.1	7
13.273	436.9	0.0	-388.36	20.32	17.02	576.8	548.4	584.6	0.509	584.6	16.9	9
13.468	441.7	0.0	-376.15	20.32	17.06	575.9	547.9	580.1	0.506	580.1	22.4	11
13.663	445.9	0.0	-365.38	20.32	17.10	575.2	547.5	576.5	0.503	576.5	27.9	13
13.855	449.7	0.0	-356.03	20.32	17.12	574.7	547.3	573.6	0.500	573.6	33.4	15
14.046	453.2	0.0	-347.93	20.32	17.15	574.3	547.1	571.4	0.498	571.4	38.8	17
14.234	456.4	0.0	-340.96	20.32	17.16	574.1	547.0	569.7	0.497	569.7	44.2	19
14.421	459.3	0.0	-335.01	20.32	17.17	573.9	547.0	568.5	0.496	568.5	49.5	21
14.605	462.1	0.0	-329.97	20.32	17.18	573.9	547.1	567.8	0.495	567.8	54.7	23
14.787	464.6	0.0	-325.76	20.32	17.18	574.0	547.2	567.5	0.495	567.5	59.9	25
14.967	467.1	0.0	-322.32	20.32	17.19	574.2	547.4	567.5	0.495	567.5	65.0	27
15.145	469.4	0.0	-319.59	20.32	17.18	574.5	547.7	567.8	0.495	567.8	70.0	29
15.321	471.5	0.0	-317.49	20.32	17.18	574.9	548.0	568.4	0.495	568.4	75.0	31
15.495	473.5	0.0	-316.01	20.32	17.17	575.4	548.5	569.3	0.496	569.3	80.0	33
15.667	475.4	0.0	-315.10	20.32	17.16	576.0	548.9	570.4	0.497	570.4	84.8	35
15.837	477.2	0.0	-314.72	20.32	17.16	576.7	549.5	571.6	0.497	571.6	89.7	37
16.005	478.8	0.0	-314.84	20.32	17.14	577.5	550.2	573.1	0.498	573.1	94.5	39
16.171	480.3	0.0	-315.44	20.32	17.13	578.4	551.0	574.6	0.499	574.6	99.2	41

7 AUG 91 LOW NOISE FAN STUDY. BPR = 14:1, RC = 1.382, WAC = 1036.9 INTERSTAGE DATA
STATION NO. 30 PAGE 30
ANNULUS EXIT 30 16:20:15 91/219 COPY 1 OF 1

MASS FLOW RATE 129.60 FLOW RATE/SQ. FT. 34.25 (CORRECTED) MASS AVE. TOTAL PRESSURE 20.32
CORRECTED FLOW RATE 98.76 ANNULUS AREA 2.88 SQ. FT = 415.2 SQ.IN MASS AVE. TOTAL TEMPERATURE 575.5

RADIUS INCHES	AXIAL VELOCITY	WHIRL VELOCITY	RADIAL VELOCITY	TOTAL PRESSURE	STATIC PRESSURE	TEMPERATURES TOTAL	TEMPERATURES STATIC	ABSOLUTE VELOCITY	ABSOLUTE MACH NO.	MER. VELOCITY	PERCENT SPAN	S.L. NO.
11.748	375.4	0.0	-372.29	20.32	17.60	579.9	556.7	528.7	0.457	528.7	6.4	1
11.852	382.1	0.0	-367.97	20.32	17.58	579.2	555.8	530.5	0.459	530.5	9.0	3
11.955	388.5	0.0	-363.81	20.32	17.56	578.6	555.0	532.2	0.461	532.2	11.6	5
12.056	394.5	0.0	-359.85	20.32	17.54	578.0	554.3	534.0	0.463	534.0	14.2	7
12.292	407.7	0.0	-351.13	20.32	17.50	576.8	552.7	538.1	0.467	538.1	20.2	9
12.516	419.3	0.0	-343.63	20.32	17.45	575.9	551.5	542.1	0.471	542.1	25.9	11
12.737	429.8	0.0	-336.99	20.32	17.41	575.2	550.4	546.2	0.475	546.2	31.6	13
12.953	439.5	0.0	-331.29	20.32	17.36	574.7	549.5	550.4	0.479	550.4	37.1	15
13.164	448.3	0.0	-326.47	20.32	17.32	574.3	548.7	554.6	0.483	554.6	42.5	17
13.371	456.6	0.0	-322.49	20.32	17.27	574.1	548.0	559.0	0.487	559.0	47.7	19
13.573	464.3	0.0	-319.32	20.32	17.23	573.9	547.5	563.5	0.491	563.5	52.9	21
13.770	471.5	0.0	-316.91	20.32	17.18	573.9	547.0	568.1	0.495	568.1	57.9	23
13.964	478.4	0.0	-315.23	20.32	17.13	574.0	546.7	572.9	0.500	572.9	62.9	25
14.155	485.0	0.0	-314.27	20.32	17.08	574.2	546.4	577.9	0.504	577.9	67.7	27
14.341	491.3	0.0	-313.99	20.32	17.02	574.5	546.2	583.0	0.509	583.0	72.5	29
14.525	497.3	0.0	-314.39	20.32	16.97	574.9	546.1	588.4	0.514	588.4	77.2	31
14.705	503.2	0.0	-315.45	20.32	16.91	575.4	546.1	593.9	0.518	593.9	81.8	33
14.882	508.9	0.0	-317.17	20.32	16.85	576.0	546.1	599.7	0.523	599.7	86.3	35
15.055	514.5	0.0	-319.55	20.32	16.79	576.7	546.2	605.6	0.529	605.6	90.7	37
15.226	519.9	0.0	-322.58	20.32	16.73	577.5	546.4	611.9	0.534	611.9	95.0	39
15.394	525.2	0.0	-326.28	20.32	16.67	578.4	546.6	618.3	0.539	618.3	99.3	41

7 AUG 91 LOW NOISE FAN STUDY. BPR = 14:1, RC = 1.382, WAC = 1036.9 INTERSTAGE DATA
PAGE 31
STATION NO. 31
ANNULUS EXIT 31 16:20:15 91/219 COPY 1 OF 1

MASS FLOW RATE 129.60 FLOW RATE/SQ. FT. 33.60 (CORRECTED) MASS AVE. TOTAL PRESSURE 20.32
CORRECTED FLOW RATE 98.76 ANNULUS AREA 2.94 SQ. FT = 423.3 SQ.IN MASS AVE. TOTAL TEMPERATURE 575.5

RADIUS INCHES	AXIAL VELOCITY	WHIRL VELOCITY	RADIAL VELOCITY	TOTAL PRESSURE	STATIC PRESSURE	TEMPERATURES TOTAL	TEMPERATURES STATIC	ABSOLUTE VELOCITY	ABSOLUTE MACH NO.	MER. VELOCITY	PERCENT SPAN	S.L. NO.
10.687	358.4	0.0	-313.96	20.32	18.09	579.9	561.1	476.5	0.410	476.5	8.8	1
10.812	366.9	0.0	-311.70	20.32	18.04	579.2	560.0	481.5	0.415	481.5	11.6	3
10.935	375.1	0.0	-309.48	20.32	18.00	578.6	558.9	486.3	0.420	486.3	14.4	5
11.055	382.9	0.0	-307.36	20.32	17.95	578.0	558.0	491.0	0.424	491.0	17.2	7
11.333	400.5	0.0	-302.57	20.32	17.85	576.8	555.9	501.9	0.434	501.9	23.5	9
11.593	416.3	0.0	-298.39	20.32	17.75	575.9	554.1	512.2	0.444	512.2	29.4	11
11.846	431.2	0.0	-294.70	20.32	17.64	575.2	552.5	522.3	0.453	522.3	35.1	13
12.089	445.2	0.0	-291.59	20.32	17.55	574.7	551.1	532.2	0.462	532.2	40.7	15
12.325	458.5	0.0	-289.07	20.32	17.45	574.3	549.8	542.0	0.472	542.0	46.0	17
12.553	471.4	0.0	-287.17	20.32	17.34	574.1	548.7	552.0	0.481	552.0	51.2	19
12.773	483.8	0.0	-285.90	20.32	17.24	573.9	547.6	562.0	0.490	562.0	56.2	21
12.988	496.0	0.0	-285.27	20.32	17.13	573.9	546.7	572.2	0.499	572.2	61.1	23
13.196	508.1	0.0	-285.28	20.32	17.02	574.0	545.7	582.7	0.509	582.7	65.8	25
13.399	520.1	0.0	-285.97	20.32	16.91	574.2	544.9	593.6	0.519	593.6	70.4	27
13.596	532.3	0.0	-287.34	20.32	16.79	574.5	544.1	604.9	0.529	604.9	74.9	29
13.788	544.5	0.0	-289.41	20.32	16.66	574.9	543.3	616.7	0.540	616.7	79.3	31
13.975	557.1	0.0	-292.20	20.32	16.53	575.4	542.5	629.0	0.551	629.0	83.5	33
14.157	570.0	0.0	-295.76	20.32	16.39	576.0	541.7	642.1	0.563	642.1	87.7	35
14.335	583.3	0.0	-300.10	20.32	16.23	576.7	540.9	656.0	0.575	656.0	91.7	37
14.508	597.3	0.0	-305.26	20.32	16.07	577.5	540.1	670.7	0.589	670.7	95.6	39
14.677	611.9	0.0	-311.30	20.32	15.89	578.4	539.2	686.5	0.603	686.5	99.5	41

7 AUG 91 LOW NOISE FAN STUDY. BPR = 14:1, RC = 1.382, WAC = 1036.9 INTERSTAGE DATA
STATION NO. 32 PAGE 32
ANNULUS EXIT 32 16:20:15 91/219 COPY 1 OF 1

MASS FLOW RATE 129.60 FLOW RATE/SQ. FT. 32.65 (CORRECTED) MASS AVE. TOTAL PRESSURE 20.32
CORRECTED FLOW RATE 98.76 ANNULUS AREA 3.02 SQ. FT = 435.6 SQ.IN MASS AVE. TOTAL TEMPERATURE 575.6

RADIUS INCHES	AXIAL VELOCITY	WHIRL VELOCITY	RADIAL VELOCITY	TOTAL PRESSURE	STATIC PRESSURE	TEMPERATURES TOTAL	TEMPERATURES STATIC	ABSOLUTE VELOCITY	ABSOLUTE MACH NO.	MER. VELOCITY	PERCENT SPAN	S.L. NO.
9.662	373.2	0.0	-233.53	20.32	18.41	579.9	563.8	440.3	0.378	440.3	11.9	1
9.822	381.8	0.0	-233.18	20.32	18.34	579.2	562.6	447.4	0.385	447.4	15.0	3
9.977	390.1	0.0	-232.78	20.32	18.28	578.6	561.4	454.3	0.391	454.3	17.9	5
10.128	398.3	0.0	-232.37	20.32	18.22	578.0	560.3	461.1	0.397	461.1	20.8	7
10.472	416.8	0.0	-231.34	20.32	18.08	576.8	557.9	476.7	0.412	476.7	27.3	9
10.787	433.9	0.0	-230.32	20.32	17.94	575.9	555.8	491.2	0.425	491.2	33.3	11
11.090	450.5	0.0	-229.33	20.32	17.81	575.2	553.9	505.5	0.438	505.5	39.0	13
11.379	466.5	0.0	-228.44	20.32	17.67	574.7	552.2	519.5	0.451	519.5	44.5	15
11.654	482.1	0.0	-227.68	20.32	17.53	574.3	550.6	533.2	0.464	533.2	49.7	17
11.917	497.5	0.0	-227.10	20.32	17.40	574.1	549.2	546.9	0.476	546.9	54.8	19
12.171	512.7	0.0	-226.72	20.32	17.26	573.9	547.8	560.6	0.489	560.6	59.6	21
12.414	527.8	0.0	-226.56	20.32	17.11	573.9	546.4	574.4	0.501	574.4	64.2	23
12.649	543.1	0.0	-226.63	20.32	16.96	574.0	545.2	588.5	0.514	588.5	68.6	25
12.876	558.6	0.0	-226.95	20.32	16.81	574.2	544.0	603.0	0.527	603.0	73.0	27
13.095	574.5	0.0	-227.54	20.32	16.65	574.5	542.8	617.9	0.541	617.9	77.1	29
13.307	590.8	0.0	-228.41	20.32	16.48	574.9	541.5	633.4	0.555	633.4	81.1	31
13.513	607.7	0.0	-229.55	20.32	16.30	575.4	540.3	649.6	0.570	649.6	85.1	33
13.712	625.3	0.0	-230.99	20.32	16.10	576.0	539.0	666.6	0.586	666.6	88.8	35
13.906	643.8	0.0	-232.73	20.32	15.90	576.7	537.7	684.6	0.602	684.6	92.5	37
14.094	663.4	0.0	-234.75	20.32	15.68	577.5	536.3	703.7	0.620	703.7	96.1	39
14.277	684.1	0.0	-237.07	20.32	15.44	578.4	534.8	724.1	0.639	724.1	99.6	41

7 AUG 91 LOW NOISE FAN STUDY. BPR = 14:1, RC = 1.382, WAC = 1036.9 INTERSTAGE DATA
PAGE 33
STATION NO. 33
ANNULUS EXIT 33 16:20:15 91/219 COPY 1 OF 1

MASS FLOW RATE 129.60 FLOW RATE/SQ. FT. 31.82 (CORRECTED) MASS AVE. TOTAL PRESSURE 20.32
CORRECTED FLOW RATE 98.76 ANNULUS AREA 3.10 SQ. FT = 446.9 SQ.IN MASS AVE. TOTAL TEMPERATURE 575.6

RADIUS INCHES	AXIAL VELOCITY	WHIRL VELOCITY	RADIAL VELOCITY	TOTAL PRESSURE	STATIC PRESSURE	TEMPERATURES TOTAL	TEMPERATURES STATIC	ABSOLUTE VELOCITY	ABSOLUTE MACH NO.	MER. VELOCITY	PERCENT SPAN	S.L. NO.
8.972	417.4	0.0	-188.29	20.32	18.25	579.9	562.5	457.9	0.394	457.9	15.8	1
9.149	424.0	0.0	-186.96	20.32	18.20	579.2	561.4	463.4	0.399	463.4	18.7	3
9.322	430.5	0.0	-185.70	20.32	18.15	578.6	560.3	468.8	0.404	468.8	21.5	5
9.489	436.8	0.0	-184.53	20.32	18.10	578.0	559.3	474.2	0.409	474.2	24.3	7
9.871	451.6	0.0	-181.95	20.32	17.99	576.8	557.1	486.9	0.421	486.9	30.6	9
10.221	465.6	0.0	-179.68	20.32	17.87	575.9	555.2	499.1	0.432	499.1	36.4	11
10.557	479.6	0.0	-177.52	20.32	17.75	575.2	553.4	511.4	0.443	511.4	41.9	13
10.876	493.4	0.0	-175.48	20.32	17.63	574.7	551.9	523.7	0.455	523.7	47.2	15
11.181	507.2	0.0	-173.49	20.32	17.51	574.3	550.4	536.0	0.466	536.0	52.2	17
11.471	521.0	0.0	-171.53	20.32	17.38	574.1	549.0	548.5	0.478	548.5	57.0	19
11.750	534.9	0.0	-169.57	20.32	17.25	573.9	547.7	561.1	0.489	561.1	61.6	21
12.018	549.0	0.0	-167.57	20.32	17.12	573.9	546.5	574.0	0.501	574.0	66.0	23
12.275	563.4	0.0	-165.49	20.32	16.98	574.0	545.3	587.2	0.513	587.2	70.2	25
12.524	578.2	0.0	-163.32	20.32	16.83	574.2	544.2	600.8	0.525	600.8	74.3	27
12.763	593.5	0.0	-161.00	20.32	16.68	574.5	543.1	614.9	0.538	614.9	78.3	29
12.995	609.3	0.0	-158.48	20.32	16.52	574.9	541.9	629.6	0.552	629.6	82.1	31
13.220	625.8	0.0	-155.72	20.32	16.35	575.4	540.8	644.9	0.566	644.9	85.8	33
13.437	643.1	0.0	-152.66	20.32	16.17	576.0	539.7	661.0	0.580	661.0	89.4	35
13.648	661.4	0.0	-149.22	20.32	15.98	576.7	538.5	678.0	0.596	678.0	92.9	37
13.853	680.7	0.0	-145.33	20.32	15.77	577.5	537.2	696.0	0.613	696.0	96.3	39
14.052	701.3	0.0	-140.86	20.32	15.54	578.4	535.8	715.3	0.630	715.3	99.5	41

7 AUG 91 LOW NOISE FAN STUDY. BPR = 14:1, RC = 1.382, WAC = 1036.9 INTERSTAGE DATA
STATION NO. 34 PAGE 34
ANNULUS EXIT 34 16:20:15 91/219 COPY 1 OF 1

MASS FLOW RATE 129.60 FLOW RATE/SQ. FT. 32.38 (CORRECTED) MASS AVE. TOTAL PRESSURE 20.32
CORRECTED FLOW RATE 98.76 ANNULUS AREA 3.05 SQ. FT = 439.2 SQ.IN MASS AVE. TOTAL TEMPERATURE 575.6

RADIUS INCHES	AXIAL VELOCITY	WHIRL VELOCITY	RADIAL VELOCITY	TOTAL PRESSURE	STATIC PRESSURE	TEMPERATURES TOTAL	TEMPERATURES STATIC	ABSOLUTE VELOCITY	ABSOLUTE MACH NO.	MER. VELOCITY	PERCENT SPAN	S.L. NO.
8.212	409.1	0.0	-131.66	20.32	18.49	579.9	564.6	429.7	0.369	429.7	11.0	1
8.431	417.3	0.0	-131.49	20.32	18.43	579.2	563.3	437.5	0.376	437.5	14.4	3
8.642	425.1	0.0	-131.24	20.32	18.36	578.6	562.1	444.9	0.383	444.9	17.7	5
8.844	432.7	0.0	-130.95	20.32	18.30	578.0	561.0	452.0	0.389	452.0	20.8	7
9.298	449.4	0.0	-130.05	20.32	18.16	576.8	558.6	467.9	0.404	467.9	27.7	9
9.708	463.6	0.0	-128.98	20.32	18.03	575.9	556.6	482.2	0.417	482.2	34.0	11
10.095	479.1	0.0	-127.74	20.32	17.90	575.2	554.8	495.8	0.429	495.8	40.0	13
10.460	492.9	0.0	-126.37	20.32	17.77	574.7	553.1	508.9	0.441	508.9	45.6	15
10.804	506.4	0.0	-124.86	20.32	17.65	574.3	551.7	521.6	0.453	521.6	50.9	17
11.132	519.6	0.0	-123.20	20.32	17.52	574.1	550.3	534.0	0.464	534.0	55.9	19
11.443	532.8	0.0	-121.40	20.32	17.40	573.9	549.1	546.4	0.476	546.4	60.7	21
11.741	545.9	0.0	-119.41	20.32	17.27	573.9	547.9	558.8	0.487	558.8	65.3	23
12.026	559.2	0.0	-117.23	20.32	17.14	574.0	546.8	571.4	0.498	571.4	69.7	25
12.300	572.8	0.0	-114.82	20.32	17.01	574.2	545.8	584.2	0.510	584.2	73.9	27
12.564	586.7	0.0	-112.16	20.32	16.87	574.5	544.8	597.4	0.522	597.4	77.9	29
12.818	601.2	0.0	-109.22	20.32	16.73	574.9	543.9	611.0	0.534	611.0	81.8	31
13.063	616.2	0.0	-105.95	20.32	16.57	575.4	542.9	625.2	0.547	625.2	85.6	33
13.300	632.0	0.0	-102.32	20.32	16.41	576.0	541.9	640.2	0.561	640.2	89.2	35
13.529	648.6	0.0	-98.27	20.32	16.23	576.7	540.9	656.0	0.575	656.0	92.8	37
13.750	666.3	0.0	-93.77	20.32	16.04	577.5	539.8	672.9	0.591	672.9	96.2	39
13.965	685.2	0.0	-88.74	20.32	15.84	578.4	538.7	690.9	0.607	690.9	99.5	41

7 AUG 91 LOW NOISE FAN STUDY. BPR = 14:1, RC = 1.382, WAC = 1036.9 INTERSTAGE DATA
PAGE 35
STATION NO. 35
ANNULUS EXIT 35 16:20:15 91/219 COPY 1 OF 1

MASS FLOW RATE 129.60 FLOW RATE/SQ. FT. 32.69 (CORRECTED) MASS AVE. TOTAL PRESSURE 20.32
CORRECTED FLOW RATE 98.76 ANNULUS AREA 3.02 SQ. FT = 435.0 SQ.IN MASS AVE. TOTAL TEMPERATURE 575.6

RADIUS INCHES	AXIAL VELOCITY	WHIRL VELOCITY	RADIAL VELOCITY	TOTAL PRESSURE	STATIC PRESSURE	TEMPERATURES TOTAL	TEMPERATURES STATIC	ABSOLUTE VELOCITY	ABSOLUTE MACH NO.	MER. VELOCITY	PERCENT SPAN	S.L. NO.
7.870	425.9	0.0	-64.02	20.32	18.48	579.9	564.5	430.7	0.370	430.7	6.0	1
8.098	432.4	0.0	-66.35	20.32	18.43	579.2	563.3	437.4	0.376	437.4	9.5	3
8.316	438.5	0.0	-68.34	20.32	18.37	578.6	562.2	443.8	0.382	443.8	12.8	5
8.527	444.5	0.0	-70.05	20.32	18.32	578.0	561.2	450.0	0.388	450.0	16.1	7
9.000	457.9	0.0	-73.10	20.32	18.19	576.8	558.9	463.7	0.400	463.7	23.3	9
9.428	470.1	0.0	-74.98	20.32	18.08	575.9	557.1	476.1	0.411	476.1	29.9	11
9.833	481.8	0.0	-75.97	20.32	17.97	575.2	555.4	487.8	0.422	487.8	36.2	13
10.214	493.0	0.0	-76.21	20.32	17.87	574.7	554.0	498.9	0.432	498.9	42.0	15
10.575	503.8	0.0	-75.80	20.32	17.76	574.3	552.7	509.4	0.442	509.4	47.6	17
10.919	514.2	0.0	-74.79	20.32	17.67	574.1	551.6	519.6	0.451	519.6	52.9	19
11.246	524.4	0.0	-73.22	20.32	17.57	573.9	550.6	529.5	0.460	529.5	57.9	21
11.559	534.5	0.0	-71.13	20.32	17.47	573.9	549.7	539.2	0.469	539.2	62.7	23
11.860	544.5	0.0	-68.50	20.32	17.38	574.0	548.9	548.8	0.478	548.8	67.4	25
12.149	554.5	0.0	-65.33	20.32	17.28	574.2	548.3	558.3	0.486	558.3	71.8	27
12.427	564.5	0.0	-61.60	20.32	17.18	574.5	547.7	567.8	0.495	567.8	76.1	29
12.696	574.5	0.0	-57.28	20.32	17.09	574.9	547.2	577.4	0.503	577.4	80.2	31
12.956	584.7	0.0	-52.33	20.32	16.99	575.4	546.7	587.0	0.512	587.0	84.2	33
13.208	595.0	0.0	-46.70	20.32	16.89	576.0	546.4	596.8	0.521	596.8	88.1	35
13.452	605.5	0.0	-40.32	20.32	16.78	576.7	546.1	606.9	0.530	606.9	91.9	37
13.689	616.3	0.0	-33.13	20.32	16.67	577.5	545.8	617.2	0.539	617.2	95.5	39
13.920	627.3	0.0	-25.06	20.32	16.56	578.4	545.6	627.8	0.548	627.8	99.1	41

7 AUG 91 LOW NOISE FAN STUDY. BPR = 14:1, RC = 1.382, WAC = 1036.9 INTERSTAGE DATA
STATION NO. 36 PAGE 36
ANNULUS EXIT 36 16:20:15 91/219 COPY 1 OF 1

MASS FLOW RATE 129.60 FLOW RATE/SQ. FT. 32.66 (CORRECTED) MASS AVE. TOTAL PRESSURE 20.32
CORRECTED FLOW RATE 98.76 ANNULUS AREA 3.02 SQ. FT = 435.5 SQ.IN MASS AVE. TOTAL TEMPERATURE 575.6

RADIUS INCHES	AXIAL VELOCITY	WHIRL VELOCITY	RADIAL VELOCITY	TOTAL PRESSURE	STATIC PRESSURE	TEMPERATURES TOTAL	TEMPERATURES STATIC	ABSOLUTE VELOCITY	ABSOLUTE MACH NO.	MER. VELOCITY	PERCENT SPAN	S.L. NO.
7.758	465.3	0.0	-29.03	20.32	18.18	579.9	561.9	466.2	0.401	466.2	4.2	1
7.973	468.7	0.0	-31.56	20.32	18.15	579.2	560.9	469.8	0.405	469.8	7.6	3
8.180	472.0	0.0	-33.73	20.32	18.12	578.6	560.0	473.2	0.408	473.2	10.8	5
8.382	475.3	0.0	-35.59	20.32	18.08	578.0	559.1	476.7	0.411	476.7	13.9	7
8.839	482.9	0.0	-38.99	20.32	18.01	576.8	557.3	484.5	0.419	484.5	20.9	9
9.257	489.9	0.0	-41.16	20.32	17.94	575.9	555.8	491.7	0.425	491.7	27.4	11
9.657	496.8	0.0	-42.42	20.32	17.87	575.2	554.5	498.6	0.432	498.6	33.6	13
10.037	503.3	0.0	-42.93	20.32	17.81	574.7	553.4	505.2	0.438	505.2	39.4	15
10.399	509.6	0.0	-42.81	20.32	17.75	574.3	552.5	511.4	0.444	511.4	45.0	17
10.745	515.7	0.0	-42.13	20.32	17.69	574.1	551.8	517.4	0.449	517.4	50.4	19
11.078	521.5	0.0	-40.96	20.32	17.63	573.9	551.1	523.1	0.455	523.1	55.5	21
11.397	527.1	0.0	-39.36	20.32	17.58	573.9	550.7	528.5	0.459	528.5	60.4	23
11.706	532.4	0.0	-37.35	20.32	17.53	574.0	550.3	533.7	0.464	533.7	65.2	25
12.005	537.5	0.0	-34.96	20.32	17.48	574.2	550.1	538.6	0.468	538.6	69.8	27
12.294	542.3	0.0	-32.19	20.32	17.43	574.5	550.0	543.3	0.473	543.3	74.3	29
12.575	546.9	0.0	-29.08	20.32	17.39	574.9	550.0	547.6	0.476	547.6	78.6	31
12.848	551.1	0.0	-25.62	20.32	17.35	575.4	550.1	551.7	0.480	551.7	82.8	33
13.114	555.0	0.0	-21.81	20.32	17.32	576.0	550.3	555.4	0.483	555.4	86.9	35
13.374	558.6	0.0	-17.67	20.32	17.29	576.7	550.7	558.8	0.486	558.8	91.0	37
13.628	561.7	0.0	-13.19	20.32	17.26	577.5	551.3	561.9	0.488	561.9	94.9	39
13.877	564.4	0.0	-8.38	20.32	17.24	578.4	551.9	564.5	0.490	564.5	98.7	41

7 AUG 91 LOW NOISE FAN STUDY. BPR = 14:1, RC = 1.382, WAC = 1036.9 INTERSTAGE DATA
STATION NO. 37 PAGE 37
ANNULUS EXIT 37 16:20:15 91/219 COPY 1 OF 1

MASS FLOW RATE 129.60 FLOW RATE/SQ. FT. 32.61 (CORRECTED) MASS AVE. TOTAL PRESSURE 20.32
CORRECTED FLOW RATE 98.76 ANNULUS AREA 3.03 SQ. FT = 436.1 SQ.IN MASS AVE. TOTAL TEMPERATURE 575.6

RADIUS INCHES	AXIAL VELOCITY	WHIRL VELOCITY	RADIAL VELOCITY	TOTAL PRESSURE	STATIC PRESSURE	TEMPERATURES TOTAL	TEMPERATURES STATIC	ABSOLUTE VELOCITY	ABSOLUTE MACH NO.	MER. VELOCITY	PERCENT SPAN	S.L. NO.
7.688	484.1	0.0	-13.19	20.32	18.02	579.9	560.4	484.2	0.417	484.2	3.2	1
7.898	485.7	0.0	-15.01	20.32	18.00	579.2	559.6	486.0	0.419	486.0	6.4	3
8.101	487.4	0.0	-16.57	20.32	17.98	578.6	558.8	487.7	0.421	487.7	9.5	5
8.299	489.2	0.0	-17.90	20.32	17.97	578.0	558.1	489.5	0.423	489.5	12.6	7
8.752	493.2	0.0	-20.29	20.32	17.92	576.8	556.6	493.7	0.427	493.7	19.6	9
9.168	497.2	0.0	-21.78	20.32	17.88	575.9	555.3	497.7	0.431	497.7	26.0	11
9.568	501.2	0.0	-22.60	20.32	17.84	575.2	554.3	501.7	0.435	501.7	32.2	13
9.949	505.1	0.0	-22.87	20.32	17.80	574.7	553.4	505.6	0.438	505.6	38.1	15
10.313	508.8	0.0	-22.68	20.32	17.77	574.3	552.7	509.3	0.442	509.3	43.7	17
10.664	512.4	0.0	-22.11	20.32	17.73	574.1	552.2	512.9	0.445	512.9	49.1	19
11.000	515.9	0.0	-21.21	20.32	17.70	573.9	551.7	516.3	0.448	516.3	54.3	21
11.326	519.2	0.0	-20.03	20.32	17.67	573.9	551.4	519.5	0.451	519.5	59.3	23
11.640	522.3	0.0	-18.59	20.32	17.64	574.0	551.3	522.6	0.454	522.6	64.2	25
11.945	525.2	0.0	-16.94	20.32	17.61	574.2	551.2	525.4	0.457	525.4	68.9	27
12.242	527.9	0.0	-15.10	20.32	17.58	574.5	551.3	528.1	0.459	528.1	73.5	29
12.530	530.4	0.0	-13.09	20.32	17.56	574.9	551.5	530.5	0.461	530.5	77.9	31
12.811	532.6	0.0	-10.94	20.32	17.54	575.4	551.8	532.7	0.463	532.7	82.3	33
13.085	534.7	0.0	-8.66	20.32	17.53	576.0	552.2	534.7	0.464	534.7	86.5	35
13.353	536.5	0.0	-6.28	20.32	17.51	576.7	552.8	536.5	0.465	536.5	90.6	37
13.616	538.0	0.0	-3.82	20.32	17.50	577.5	553.4	538.0	0.467	538.0	94.7	39
13.874	539.2	0.0	-1.31	20.32	17.49	578.4	554.2	539.2	0.467	539.2	98.7	41

7 AUG 91 LOW NOISE FAN STUDY. BPR = 14:1, RC = 1.382, WAC = 1036.9 INTERSTAGE DATA
PAGE 38
STATION NO. 38
ANNULUS EXIT 38 16:20:15 91/219 COPY 1 OF 1

MASS FLOW RATE 129.60 FLOW RATE/SQ. FT. 32.60 (CORRECTED) MASS AVE. TOTAL PRESSURE 20.32
CORRECTED FLOW RATE 98.76 ANNULUS AREA 3.03 SQ. FT = 436.3 SQ.IN MASS AVE. TOTAL TEMPERATURE 575.6

RADIUS INCHES	AXIAL VELOCITY	WHIRL VELOCITY	RADIAL VELOCITY	TOTAL PRESSURE	STATIC PRESSURE	TEMPERATURES TOTAL	TEMPERATURES STATIC	ABSOLUTE VELOCITY	ABSOLUTE MACH NO.	MER. VELOCITY	PERCENT SPAN	S.L. NO.
7.664	500.7	0.0	-2.32	20.32	17.87	579.9	559.1	500.7	0.432	500.7	2.8	1
7.869	501.2	0.0	-3.58	20.32	17.86	579.2	558.3	501.2	0.433	501.2	6.0	3
8.068	501.7	0.0	-4.68	20.32	17.86	578.6	557.7	501.7	0.433	501.7	9.0	5
8.263	502.3	0.0	-5.63	20.32	17.85	578.0	557.0	502.3	0.434	502.3	12.0	7
8.708	503.8	0.0	-7.40	20.32	17.83	576.8	555.7	503.9	0.436	503.9	18.9	9
9.120	505.5	0.0	-8.59	20.32	17.81	575.9	554.6	505.6	0.438	505.6	25.3	11
9.518	507.3	0.0	-9.36	20.32	17.79	575.2	553.8	507.4	0.440	507.4	31.4	13
9.898	509.2	0.0	-9.78	20.32	17.77	574.7	553.1	509.3	0.442	509.3	37.3	15
10.262	510.9	0.0	-9.91	20.32	17.75	574.3	552.6	511.0	0.443	511.0	42.9	17
10.613	512.7	0.0	-9.81	20.32	17.73	574.1	552.2	512.8	0.445	512.8	48.3	19
10.952	514.4	0.0	-9.49	20.32	17.71	573.9	551.9	514.5	0.447	514.5	53.6	21
11.280	516.0	0.0	-9.01	20.32	17.70	573.9	551.7	516.0	0.448	516.0	58.6	23
11.597	517.4	0.0	-8.38	20.32	17.69	574.0	551.7	517.5	0.449	517.5	63.5	25
11.906	518.8	0.0	-7.63	20.32	17.67	574.2	551.8	518.9	0.451	518.9	68.3	27
12.206	520.1	0.0	-6.78	20.32	17.66	574.5	552.0	520.2	0.452	520.2	72.9	29
12.499	521.2	0.0	-5.83	20.32	17.65	574.9	552.3	521.3	0.452	521.3	77.4	31
12.785	522.3	0.0	-4.82	20.32	17.65	575.4	552.7	522.3	0.453	522.3	81.9	33
13.064	523.2	0.0	-3.75	20.32	17.64	576.0	553.2	523.2	0.454	523.2	86.2	35
13.338	524.0	0.0	-2.64	20.32	17.63	576.7	553.9	524.0	0.454	524.0	90.4	37
13.606	524.6	0.0	-1.51	20.32	17.63	577.5	554.6	524.7	0.454	524.7	94.5	39
13.869	525.2	0.0	-0.36	20.32	17.63	578.4	555.5	525.2	0.455	525.2	98.6	41

7 AUG 91 LOW NOISE FAN STUDY. BPR = 14:1, RC = 1.382, WAC = 1036.9 INTERSTAGE DATA
STATION NO. 39 PAGE 39
ANNULUS EXIT 39 16:20:15 91/219 COPY 1 OF 1

MASS FLOW RATE 129.60 FLOW RATE/SQ. FT. 32.59 (CORRECTED) MASS AVE. TOTAL PRESSURE 20.32
CORRECTED FLOW RATE 98.76 ANNULUS AREA 3.03 SQ. FT = 436.3 SQ.IN MASS AVE. TOTAL TEMPERATURE 575.6

RADIUS INCHES	AXIAL VELOCITY	WHIRL VELOCITY	RADIAL VELOCITY	TOTAL PRESSURE	STATIC PRESSURE	TEMPERATURES TOTAL	TEMPERATURES STATIC	ABSOLUTE VELOCITY	ABSOLUTE MACH NO.	MER. VELOCITY	PERCENT SPAN	S.L. NO.
7.675	508.1	0.0	-0.38	20.32	17.80	579.9	558.5	508.1	0.439	508.1	3.0	1
7.877	508.0	0.0	-1.14	20.32	17.80	579.2	557.8	508.0	0.439	508.0	6.1	3
8.074	508.0	0.0	-1.82	20.32	17.80	578.6	557.1	508.0	0.439	508.0	9.1	5
8.267	508.1	0.0	-2.44	20.32	17.79	578.0	556.5	508.1	0.439	508.1	12.1	7
8.703	508.6	0.0	-3.67	20.32	17.78	576.8	555.3	508.6	0.440	508.6	18.9	9
9.118	509.3	0.0	-4.57	20.32	17.77	575.9	554.3	509.3	0.441	509.3	25.2	11
9.513	510.1	0.0	-5.21	20.32	17.76	575.2	553.6	510.2	0.442	510.2	31.3	13
9.892	511.1	0.0	-5.62	20.32	17.75	574.7	552.9	511.2	0.443	511.2	37.2	15
10.256	512.2	0.0	-5.84	20.32	17.74	574.3	552.5	512.2	0.445	512.2	42.8	17
10.606	513.2	0.0	-5.88	20.32	17.73	574.1	552.1	513.2	0.446	513.2	48.2	19
10.945	514.3	0.0	-5.78	20.32	17.72	573.9	551.9	514.3	0.447	514.3	53.5	21
11.273	515.3	0.0	-5.55	20.32	17.71	573.9	551.8	515.3	0.448	515.3	58.5	23
11.592	516.3	0.0	-5.22	20.32	17.70	574.0	551.8	516.3	0.448	516.3	63.4	25
11.901	517.2	0.0	-4.80	20.32	17.69	574.2	552.0	517.2	0.449	517.2	68.2	27
12.203	518.1	0.0	-4.32	20.32	17.68	574.5	552.2	518.1	0.450	518.1	72.9	29
12.496	518.9	0.0	-3.78	20.32	17.68	574.9	552.5	518.9	0.450	518.9	77.4	31
12.783	519.6	0.0	-3.20	20.32	17.67	575.4	553.0	519.6	0.451	519.6	81.8	33
13.064	520.3	0.0	-2.60	20.32	17.67	576.0	553.5	520.3	0.451	520.3	86.2	35
13.339	520.9	0.0	-1.98	20.32	17.66	576.7	554.1	520.9	0.451	520.9	90.4	37
13.608	521.5	0.0	-1.37	20.32	17.66	577.5	554.9	521.5	0.452	521.5	94.6	39
13.872	522.0	0.0	-0.76	20.32	17.66	578.4	555.8	522.0	0.452	522.0	98.6	41

7 AUG 91 LOW NOISE FAN STUDY. BPR = 14:1, RC = 1.382, WAC = 1036.9 INTERSTAGE DATA
STATION NO. 40 PAGE 40
ANNULUS EXIT 40 16:20:15 91/219 COPY 1 OF 1

MASS FLOW RATE 129.60 FLOW RATE/SQ. FT. 32.59 (CORRECTED) MASS AVE. TOTAL PRESSURE 20.32
CORRECTED FLOW RATE 98.76 ANNULUS AREA 3.03 SQ. FT = 436.3 SQ.IN MASS AVE. TOTAL TEMPERATURE 575.6

RADIUS INCHES	AXIAL VELOCITY	WHIRL VELOCITY	RADIAL VELOCITY	TOTAL PRESSURE	STATIC PRESSURE	TEMPERATURES TOTAL	TEMPERATURES STATIC	ABSOLUTE VELOCITY	ABSOLUTE MACH NO.	MER. VELOCITY	PERCENT SPAN	S.L. NO.
7.661	516.9	0.0	0.00	20.32	17.72	579.9	557.7	516.9	0.447	516.9	2.8	1
7.862	516.6	0.0	0.00	20.32	17.72	579.2	557.0	516.6	0.447	516.6	5.8	3
8.057	516.3	0.0	0.00	20.32	17.72	578.6	556.4	516.3	0.446	516.3	8.9	5
8.247	516.0	0.0	0.00	20.32	17.72	578.0	555.9	516.0	0.447	516.0	11.8	7
8.685	515.5	0.0	0.00	20.32	17.72	576.8	554.7	515.5	0.447	515.5	18.6	9
9.091	515.1	0.0	0.00	20.32	17.72	575.9	553.8	515.1	0.447	515.1	24.8	11
9.484	514.8	0.0	0.00	20.32	17.72	575.2	553.2	514.8	0.447	514.8	30.9	13
9.862	514.6	0.0	0.00	20.32	17.72	574.7	552.6	514.6	0.447	514.6	36.7	15
10.225	514.4	0.0	0.00	20.32	17.72	574.3	552.3	514.4	0.447	514.4	42.3	17
10.576	514.3	0.0	0.00	20.32	17.72	574.1	552.0	514.3	0.446	514.3	47.8	19
10.916	514.2	0.0	0.00	20.32	17.72	573.9	551.9	514.2	0.447	514.2	53.0	21
11.245	514.2	0.0	0.00	20.32	17.72	573.9	551.9	514.2	0.447	514.2	58.1	23
11.565	514.3	0.0	0.00	20.32	17.72	574.0	552.0	514.3	0.447	514.3	63.0	25
11.876	514.4	0.0	0.00	20.32	17.72	574.2	552.2	514.4	0.447	514.4	67.8	27
12.179	514.5	0.0	0.00	20.32	17.72	574.5	552.5	514.5	0.447	514.5	72.5	29
12.476	514.7	0.0	0.00	20.32	17.72	574.9	552.9	514.7	0.447	514.7	77.1	31
12.765	514.9	0.0	0.00	20.32	17.72	575.4	553.4	514.9	0.447	514.9	81.6	33
13.048	515.2	0.0	0.00	20.32	17.72	576.0	553.9	515.2	0.447	515.2	85.9	35
13.325	515.5	0.0	0.00	20.32	17.72	576.7	554.6	515.5	0.447	515.5	90.2	37
13.597	515.8	0.0	0.00	20.32	17.72	577.5	555.4	515.8	0.447	515.8	94.4	39
13.864	516.3	0.0	0.00	20.32	17.72	578.4	556.3	516.3	0.447	516.3	98.5	41

7 AUG 91 LOW NOISE FAN STUDY. BPR = 14:1, RC = 1.382, WAC = 1036.9 INTERSTAGE DATA
STATION NO. 41 PAGE 41
ANNULUS EXIT 41 16:20:15 91/219 COPY 1 OF 1

MASS FLOW RATE 907.30 FLOW RATE/SQ. FT. 36.10 (CORRECTED) MASS AVE. TOTAL PRESSURE 20.61
CORRECTED FLOW RATE 681.08 ANNULUS AREA 18.86 SQ. FT =2716.4 SQ.IN MASS AVE. TOTAL TEMPERATURE 574.8

RADIUS INCHES	AXIAL VELOCITY	WHIRL VELOCITY	RADIAL VELOCITY	TOTAL PRESSURE	STATIC PRESSURE	TEMPERATURES TOTAL	TEMPERATURES STATIC	ABSOLUTE VELOCITY	ABSOLUTE MACH NO.	MER. VELOCITY	PERCENT SPAN	S.L. NO.
19.820	471.6	386.4	225.06	18.30	14.55	554.6	519.4	649.9	0.582	522.6	0.0	1
20.463	528.9	390.7	217.86	18.43	14.24	556.2	516.2	692.7	0.622	572.0	4.1	3
21.042	560.8	393.6	191.35	18.65	14.17	557.5	515.4	711.4	0.639	592.5	7.8	5
21.580	582.2	396.0	161.96	18.82	14.17	558.8	515.3	722.5	0.649	604.3	11.2	7
22.763	606.7	401.5	114.91	19.16	14.29	561.5	516.4	736.5	0.661	617.5	18.8	9
23.825	616.2	405.9	89.29	19.46	14.45	564.0	518.0	743.3	0.666	622.7	25.5	11
24.833	622.3	409.5	72.03	19.74	14.62	566.4	519.7	748.4	0.670	626.4	32.0	13
25.788	627.0	412.3	59.75	20.00	14.77	568.5	521.4	752.8	0.672	629.8	38.0	15
26.695	631.0	414.8	50.40	20.24	14.91	570.6	522.9	756.8	0.675	633.0	43.8	17
27.562	634.8	417.3	44.19	20.46	15.04	572.6	524.4	761.0	0.678	636.3	49.4	19
28.394	638.7	420.0	38.82	20.68	15.16	574.6	525.8	765.4	0.681	639.9	54.7	21
29.192	642.7	422.9	33.96	20.89	15.27	576.6	527.2	770.0	0.684	643.6	59.8	23
29.961	646.9	425.8	29.49	21.10	15.38	578.5	528.5	775.0	0.688	647.6	64.7	25
30.704	650.3	430.1	26.14	21.30	15.48	580.6	529.9	780.1	0.691	650.8	69.4	27
31.422	653.7	433.0	22.84	21.49	15.57	582.5	531.2	784.4	0.694	654.1	74.0	29
32.119	655.8	433.9	19.53	21.64	15.66	584.0	532.5	786.6	0.695	656.1	78.4	31
32.799	654.7	431.3	16.19	21.70	15.75	585.0	533.8	784.2	0.692	654.9	82.7	33
33.464	651.2	426.4	13.26	21.71	15.84	585.6	535.1	778.5	0.686	651.3	87.0	35
34.120	645.9	419.7	10.21	21.68	15.93	585.8	536.4	770.4	0.678	646.0	91.2	37
34.768	636.3	409.1	6.92	21.56	16.02	585.4	537.7	756.5	0.665	636.4	95.3	39
35.414	621.1	394.8	3.45	21.34	16.11	584.2	539.2	736.0	0.647	621.1	99.4	41

7 AUG 91 LOW NOISE FAN STUDY. BPR = 14:1, RC = 1.382, WAC = 1036.9 INTERSTAGE DATA
STATION NO. 42 PAGE 42
ANNULUS EXIT 42 16:20:15 91/219 COPY 1 OF 1

MASS FLOW RATE 907.30 FLOW RATE/SQ. FT. 37.19 (CORRECTED) MASS AVE. TOTAL PRESSURE 20.61
CORRECTED FLOW RATE 681.08 ANNULUS AREA 18.31 SQ. FT =2637.1 SQ.IN MASS AVE. TOTAL TEMPERATURE 574.8

RADIUS INCHES	AXIAL VELOCITY	WHIRL VELOCITY	RADIAL VELOCITY	TOTAL PRESSURE	STATIC PRESSURE	TEMPERATURES TOTAL	TEMPERATURES STATIC	ABSOLUTE VELOCITY	ABSOLUTE MACH NO.	MER. VELOCITY	PERCENT SPAN	S.L. NO.
20.507	711.1	373.5	118.69	18.30	12.71	554.6	499.7	811.9	0.741	720.9	0.0	1
20.989	694.9	380.9	93.89	18.48	13.02	556.2	503.1	798.0	0.726	701.2	3.3	3
21.463	680.5	385.9	78.81	18.65	13.29	557.5	506.0	786.2	0.713	685.0	6.4	5
21.930	669.3	389.7	69.01	18.82	13.52	558.8	508.4	777.5	0.703	672.8	9.5	7
23.010	652.0	397.2	55.62	19.16	13.94	561.5	512.7	765.5	0.689	654.4	16.7	9
24.018	643.8	402.6	48.40	19.46	14.24	564.0	515.8	760.9	0.683	645.6	23.4	11
24.993	640.7	406.9	43.35	19.74	14.47	566.4	518.2	760.2	0.681	642.2	29.9	13
25.924	640.6	410.1	39.35	20.00	14.66	568.5	520.2	761.6	0.681	641.8	36.1	15
26.814	642.3	412.9	35.88	20.24	14.82	570.6	522.0	764.4	0.682	643.3	42.1	17
27.667	644.9	415.7	32.67	20.46	14.95	572.6	523.5	768.0	0.685	645.7	47.8	19
28.486	648.0	418.6	29.64	20.68	15.08	574.6	525.0	772.0	0.687	648.7	53.2	21
29.275	651.4	421.7	26.76	20.89	15.19	576.6	526.4	776.4	0.690	651.9	58.5	23
30.035	655.4	424.8	24.02	21.10	15.29	578.5	527.7	781.4	0.694	655.9	63.5	25
30.769	658.9	429.2	21.32	21.30	15.39	580.6	529.1	786.6	0.698	659.3	68.4	27
31.479	662.4	432.2	18.69	21.49	15.48	582.5	530.4	791.1	0.701	662.7	73.2	29
32.169	664.8	433.2	16.07	21.64	15.57	584.0	531.6	793.6	0.702	665.0	77.8	31
32.841	664.3	430.8	13.39	21.70	15.65	585.0	532.8	791.8	0.700	664.4	82.2	33
33.499	661.8	426.0	10.62	21.71	15.72	585.6	534.0	787.1	0.695	661.9	86.6	35
34.146	658.1	419.3	7.72	21.68	15.80	585.8	535.1	780.4	0.688	658.1	90.9	37
34.785	650.8	408.9	4.61	21.56	15.86	585.4	536.2	768.6	0.677	650.8	95.2	39
35.420	639.1	394.8	1.14	21.34	15.92	584.2	537.3	751.2	0.661	639.1	99.4	41

7 AUG 91 LOW NOISE FAN STUDY. BPR = 14:1, RC = 1.382, WAC = 1036.9 INTERSTAGE DATA
STATION NO. 43 PAGE 43
ANNULUS EXIT 43 16:20:15 91/219 COPY 1 OF 1

MASS FLOW RATE 907.30 FLOW RATE/SQ. FT. 37.16 (CORRECTED) MASS AVE. TOTAL PRESSURE 20.61
CORRECTED FLOW RATE 681.08 ANNULUS AREA 18.33 SQ. FT =2639.3 SQ.IN MASS AVE. TOTAL TEMPERATURE 574.8

RADIUS INCHES	AXIAL VELOCITY	WHIRL VELOCITY	RADIAL VELOCITY	TOTAL PRESSURE	STATIC PRESSURE	TEMPERATURES TOTAL	TEMPERATURES STATIC	ABSOLUTE VELOCITY	ABSOLUTE MACH NO.	MER. VELOCITY	PERCENT SPAN	S.L. NO.
20.519	640.6	373.3	3.42	18.30	13.54	554.6	508.8	741.4	0.670	640.6	0.1	1
21.029	634.0	380.2	10.57	18.48	13.71	556.2	510.7	739.3	0.667	634.0	3.5	3
21.527	630.8	384.8	16.01	18.65	13.85	557.5	512.0	739.1	0.666	631.0	6.8	5
22.012	629.6	388.2	20.03	18.82	13.97	558.8	513.2	740.0	0.666	630.0	10.1	7
23.119	629.7	395.3	25.59	19.16	14.20	561.5	515.4	744.0	0.668	630.2	17.5	9
24.139	632.2	400.6	27.60	19.46	14.38	564.0	517.3	748.9	0.672	632.8	24.2	11
25.116	636.1	404.9	27.76	19.74	14.54	566.4	519.0	754.5	0.676	636.7	30.8	13
26.043	640.6	408.2	26.87	20.00	14.68	568.5	520.4	760.1	0.680	641.2	36.9	15
26.927	645.4	411.2	25.38	20.24	14.80	570.6	521.8	765.7	0.684	645.9	42.8	17
27.773	650.3	414.1	23.57	20.46	14.91	572.6	523.1	771.4	0.688	650.8	48.5	19
28.583	655.2	417.2	21.58	20.68	15.01	574.6	524.3	777.0	0.692	655.5	53.9	21
29.362	659.9	420.4	19.48	20.89	15.11	576.6	525.6	782.7	0.696	660.2	59.1	23
30.113	665.1	423.7	17.36	21.10	15.20	578.5	526.7	788.8	0.701	665.3	64.1	25
30.837	669.5	428.2	15.21	21.30	15.28	580.6	528.0	794.9	0.706	669.7	68.9	27
31.539	673.8	431.4	13.07	21.49	15.36	582.5	529.2	800.2	0.710	674.0	73.6	29
32.219	677.0	432.6	10.91	21.64	15.43	584.0	530.3	803.4	0.712	677.1	78.1	31
32.882	677.2	430.2	8.72	21.70	15.51	585.0	531.4	802.3	0.710	677.2	82.5	33
33.531	675.4	425.6	6.51	21.71	15.57	585.6	532.5	798.3	0.706	675.5	86.8	35
34.169	672.4	419.1	4.27	21.68	15.63	585.8	533.6	792.3	0.700	672.4	91.1	37
34.798	665.8	408.7	2.00	21.56	15.69	585.4	534.6	781.2	0.689	665.8	95.3	39
35.423	654.8	394.7	-0.33	21.34	15.74	584.2	535.6	764.6	0.674	654.8	99.4	41

7 AUG 91 LOW NOISE FAN STUDY. BPR = 14:1, RC = 1.382, WAC = 1036.9 INTERSTAGE DATA
STATION NO. 44 PAGE 44
ANNULUS EXIT 44 16:20:15 91/219 COPY 1 OF 1

MASS FLOW RATE 907.30 FLOW RATE/SQ. FT. 37.16 (CORRECTED) MASS AVE. TOTAL PRESSURE 20.61
CORRECTED FLOW RATE 681.08 ANNULUS AREA 18.33 SQ. FT =2639.4 SQ.IN MASS AVE. TOTAL TEMPERATURE 574.8

RADIUS INCHES	AXIAL VELOCITY	WHIRL VELOCITY	RADIAL VELOCITY	TOTAL PRESSURE	STATIC PRESSURE	TEMPERATURES TOTAL	TEMPERATURES STATIC	ABSOLUTE VELOCITY	ABSOLUTE MACH NO.	MER. VELOCITY	PERCENT SPAN	S.L. NO.
20.529	599.6	373.1	3.23	18.30	13.94	554.6	513.1	706.2	0.636	599.6	0.2	1
21.059	605.0	379.6	9.11	18.48	14.00	556.2	513.7	714.3	0.643	605.1	3.7	3
21.569	610.3	384.0	13.52	18.65	14.06	557.5	514.2	721.2	0.649	610.5	7.1	5
22.062	615.1	387.3	16.83	18.82	14.12	558.8	514.7	727.1	0.654	615.4	10.4	7
23.179	624.0	394.3	21.71	19.16	14.27	561.5	516.1	738.5	0.663	624.4	17.9	9
24.199	630.9	399.6	23.91	19.46	14.40	564.0	517.5	747.2	0.670	631.4	24.6	11
25.173	637.4	404.0	24.66	19.74	14.53	566.4	518.9	755.0	0.676	637.9	31.1	13
26.096	643.4	407.4	24.49	20.00	14.65	568.5	520.2	762.0	0.681	643.9	37.3	15
26.975	649.2	410.5	23.74	20.24	14.76	570.6	521.4	768.5	0.686	649.6	43.2	17
27.816	654.7	413.5	22.59	20.46	14.87	572.6	522.6	774.7	0.691	655.1	48.8	19
28.621	660.0	416.7	21.18	20.68	14.96	574.6	523.8	780.8	0.696	660.3	54.1	21
29.395	665.1	419.9	19.58	20.89	15.05	576.6	525.0	786.8	0.700	665.3	59.3	23
30.141	670.5	423.3	17.85	21.10	15.14	578.5	526.1	793.1	0.705	670.7	64.2	25
30.861	675.0	427.9	16.01	21.30	15.22	580.6	527.4	799.4	0.710	675.2	69.0	27
31.558	679.5	431.1	14.08	21.49	15.30	582.5	528.5	804.9	0.714	679.7	73.7	29
32.234	682.8	432.4	12.07	21.64	15.37	584.0	529.6	808.3	0.716	682.9	78.2	31
32.893	683.2	430.1	9.94	21.70	15.44	585.0	530.8	807.3	0.715	683.2	82.6	33
33.538	681.6	425.5	7.69	21.71	15.50	585.6	531.8	803.5	0.711	681.7	86.9	35
34.172	678.7	419.0	5.34	21.68	15.56	585.8	532.9	797.7	0.705	678.7	91.1	37
34.797	672.3	408.7	2.86	21.56	15.62	585.4	533.8	786.8	0.695	672.4	95.3	39
35.418	661.6	394.8	0.20	21.34	15.67	584.2	534.8	770.5	0.680	661.6	99.4	41

7 AUG 91 LOW NOISE FAN STUDY. BPR = 14:1, RC = 1.382, WAC = 1036.9 INTERSTAGE DATA
PAGE 45
STATION NO. 45
ANNULUS EXIT 45 16:20:15 91/219 COPY 1 OF 1

MASS FLOW RATE 907.30 FLOW RATE/SQ. FT. 37.15 (CORRECTED) MASS AVE. TOTAL PRESSURE 20.61
CORRECTED FLOW RATE 681.08 ANNULUS AREA 18.33 SQ. FT =2640.0 SQ.IN MASS AVE. TOTAL TEMPERATURE 574.8

RADIUS INCHES	AXIAL VELOCITY	WHIRL VELOCITY	RADIAL VELOCITY	TOTAL PRESSURE	STATIC PRESSURE	TEMPERATURES TOTAL	TEMPERATURES STATIC	ABSOLUTE VELOCITY	ABSOLUTE MACH NO.	MER. VELOCITY	PERCENT SPAN	S.L. NO.
20.548	550.1	372.7	1.64	18.30	14.39	554.6	517.8	664.5	0.596	550.1	0.3	1
21.109	559.4	378.7	4.00	18.48	14.43	556.2	518.2	675.5	0.605	559.4	4.1	3
21.646	568.6	382.6	6.03	18.65	14.46	557.5	518.4	685.4	0.614	568.7	7.6	5
22.161	577.4	385.6	7.74	18.82	14.50	558.8	518.6	694.4	0.622	577.5	11.1	7
23.315	595.0	392.0	10.67	19.16	14.57	561.5	519.3	712.6	0.638	595.1	18.8	9
24.357	609.4	397.0	12.27	19.46	14.64	564.0	520.0	727.4	0.651	609.5	25.7	11
25.344	622.5	401.3	12.98	19.74	14.71	566.4	520.7	740.7	0.662	622.6	32.3	13
26.272	634.3	404.7	13.02	20.00	14.77	568.5	521.4	752.5	0.672	634.4	38.5	15
27.150	645.1	407.8	12.59	20.24	14.83	570.6	522.1	763.3	0.681	645.3	44.3	17
27.986	655.1	411.0	11.81	20.46	14.88	572.6	522.8	773.5	0.690	655.3	49.9	19
28.783	664.4	414.3	10.80	20.68	14.93	574.6	523.5	783.1	0.698	664.5	55.2	21
29.548	673.2	417.8	9.65	20.89	14.98	576.6	524.3	792.4	0.706	673.3	60.3	23
30.283	682.1	421.3	8.41	21.10	15.02	578.5	525.0	801.7	0.714	682.1	65.2	25
30.990	689.9	426.1	7.12	21.30	15.06	580.6	525.9	810.9	0.721	689.9	69.9	27
31.674	697.5	429.5	5.82	21.49	15.10	582.5	526.6	819.2	0.728	697.5	74.5	29
32.336	703.8	431.0	4.52	21.64	15.13	584.0	527.3	825.3	0.733	703.8	78.9	31
32.979	707.3	429.0	3.24	21.70	15.16	585.0	528.0	827.2	0.734	707.3	83.2	33
33.608	709.0	424.6	1.98	21.71	15.19	585.6	528.7	826.4	0.733	709.0	87.4	35
34.224	709.6	418.4	0.76	21.68	15.20	585.8	529.3	823.8	0.730	709.6	91.5	37
34.830	707.2	408.3	-0.43	21.56	15.21	585.4	529.9	816.6	0.724	707.2	95.5	39
35.430	701.0	394.7	-1.59	21.34	15.21	584.2	530.4	804.5	0.712	701.0	99.5	41

7 AUG 91 LOW NOISE FAN STUDY. BPR = 14:1, RC = 1.382, WAC = 1036.9 INTERSTAGE DATA
STATION NO. 46 PAGE 46
ANNULUS EXIT 46 16:20:15 91/219 COPY 1 OF 1

MASS FLOW RATE 907.30 FLOW RATE/SQ. FT. 37.20 (CORRECTED) MASS AVE. TOTAL PRESSURE 20.61
CORRECTED FLOW RATE 681.08 ANNULUS AREA 18.31 SQ. FT =2636.8 SQ.IN MASS AVE. TOTAL TEMPERATURE 574.8

RADIUS INCHES	AXIAL VELOCITY	WHIRL VELOCITY	RADIAL VELOCITY	TOTAL PRESSURE	STATIC PRESSURE	TEMPERATURES TOTAL	TEMPERATURES STATIC	ABSOLUTE VELOCITY	ABSOLUTE MACH NO.	MER. VELOCITY	PERCENT SPAN	S.L. NO.
20.549	554.1	372.7	27.70	18.30	14.35	554.6	517.4	668.3	0.599	554.8	0.3	1
21.108	563.1	378.7	31.86	18.48	14.39	556.2	517.7	679.4	0.609	564.0	4.0	3
21.642	572.4	382.7	34.55	18.65	14.42	557.5	517.9	689.4	0.618	573.5	7.6	5
22.155	581.4	385.7	36.39	18.82	14.45	558.8	518.1	693.7	0.626	582.6	11.0	7
23.304	599.8	392.2	38.65	19.16	14.51	561.5	518.6	717.7	0.643	601.1	18.7	9
24.341	615.0	397.2	39.20	19.46	14.57	564.0	519.3	733.2	0.656	616.3	25.6	11
25.322	628.6	401.6	38.86	19.74	14.63	566.4	519.9	747.0	0.668	629.8	32.1	13
26.245	640.8	405.1	38.00	20.00	14.69	568.5	520.6	759.0	0.679	641.9	38.3	15
27.119	651.6	408.3	36.88	20.24	14.75	570.6	521.3	769.8	0.688	652.7	44.1	17
27.951	661.4	411.5	35.63	20.46	14.80	572.6	522.0	779.7	0.696	662.3	49.7	19
28.746	670.1	414.9	34.36	20.68	14.86	574.6	522.8	788.9	0.704	671.0	54.9	21
29.508	678.2	418.3	33.14	20.89	14.91	576.6	523.6	797.5	0.711	679.0	60.0	23
30.241	686.0	421.9	32.03	21.10	14.97	578.5	524.4	806.0	0.718	686.7	64.9	25
30.948	692.5	426.7	31.03	21.30	15.02	580.6	525.4	814.0	0.724	693.2	69.6	27
31.631	698.6	430.1	30.19	21.49	15.08	582.5	526.4	820.9	0.730	699.3	74.2	29
32.294	703.2	431.6	29.56	21.64	15.13	584.0	527.3	825.6	0.733	703.8	78.6	31
32.940	704.6	429.5	29.17	21.70	15.19	585.0	528.3	825.7	0.733	705.2	82.9	33
33.572	704.1	425.0	29.21	21.71	15.24	585.6	529.2	822.9	0.730	704.7	87.1	35
34.192	702.0	418.8	29.81	21.68	15.28	585.8	530.1	818.0	0.725	702.7	91.2	37
34.804	696.6	408.6	31.03	21.56	15.33	585.4	531.0	808.2	0.715	697.3	95.3	39
35.411	687.0	394.9	33.13	21.34	15.37	584.2	531.9	793.1	0.701	687.8	99.4	41

7 AUG 91 LOW NOISE FAN STUDY. BPR = 14:1, RC = 1.382, WAC = 1036.9 INTERSTAGE DATA
PAGE 47
STATION NO. 47
STATOR EXIT 3 16:20:15 91/219 COPY 1 OF 1

MASS FLOW RATE 907.30 FLOW RATE/SQ. FT. 35.62 (CORRECTED) MASS AVE. TOTAL PRESSURE 20.29
CORRECTED FLOW RATE 691.64 ANNULUS AREA 19.42 SQ. FT =2796.5 SQ.IN MASS AVE. TOTAL TEMPERATURE 574.8
PRESSURE RATIO 1.156 CUMULATIVE ADIABATIC EFFICIENCY 89.3 STAGE ADIABATIC EFFICIENCY 91.9

RADIUS INCHES	AXIAL VELOCITY	WHIRL VELOCITY	RADIAL VELOCITY	TOTAL PRESSURE	STATIC PRESSURE	TEMPERATURES TOTAL	TEMPERATURES STATIC	ABSOLUTE VELOCITY	ABSOLUTE MACH NO.	MER. VELOCITY	PERCENT SPAN	S.L. NO.
21.375	387.3	0.0	-0.94	17.58	16.23	554.6	542.1	387.3	0.339	387.3	2.4	1
22.055	427.0	0.0	1.51	17.90	16.25	556.2	541.0	427.0	0.375	427.0	6.8	3
22.662	455.1	0.0	2.85	18.16	16.27	557.5	540.3	455.1	0.399	455.1	10.7	5
23.222	477.2	0.0	3.44	18.39	16.30	558.8	539.8	477.2	0.419	477.2	14.3	7
24.425	515.4	0.0	2.79	18.83	16.36	561.5	539.4	515.4	0.453	515.4	22.1	9
25.472	542.5	0.0	0.33	19.19	16.43	564.0	539.5	542.5	0.476	542.5	28.8	11
26.444	564.3	0.0	-3.33	19.51	16.49	566.4	539.9	564.3	0.495	564.3	35.1	13
27.347	581.7	0.0	-7.80	19.78	16.56	568.5	540.4	581.8	0.510	581.8	40.9	15
28.195	596.3	0.0	-12.87	20.04	16.63	570.6	541.0	596.4	0.523	596.4	46.4	17
28.998	608.7	0.0	-18.42	20.27	16.69	572.6	541.8	609.0	0.534	609.0	51.6	19
29.763	619.4	0.0	-24.38	20.48	16.76	574.6	542.6	619.9	0.543	619.9	56.5	21
30.495	628.7	0.0	-30.70	20.67	16.82	576.6	543.6	629.5	0.551	629.5	61.2	23
31.199	637.3	0.0	-37.38	20.87	16.89	578.5	544.6	638.4	0.558	638.4	65.8	25
31.878	644.8	0.0	-44.38	21.05	16.96	580.6	545.8	646.3	0.564	646.3	70.2	27
32.534	650.4	0.0	-51.61	21.21	17.02	582.5	547.0	652.5	0.569	652.5	74.4	29
33.173	652.6	0.0	-58.93	21.32	17.09	584.0	548.3	655.3	0.571	655.3	78.5	31
33.798	648.5	0.0	-66.00	21.35	17.17	585.0	549.7	651.8	0.567	651.8	82.5	33
34.418	639.7	0.0	-72.96	21.33	17.24	585.6	551.1	643.9	0.560	643.9	86.5	35
35.036	627.0	0.0	-79.87	21.25	17.32	585.8	552.6	632.1	0.549	632.1	90.5	37
35.658	606.4	0.0	-86.22	21.09	17.41	585.4	554.1	612.5	0.531	612.5	94.5	39
36.295	575.6	0.0	-91.75	20.82	17.50	584.2	556.0	582.9	0.504	582.9	98.6	41

ABSOLUTE INLET	MACH NOS. EXIT	TOTAL TEMP RISE	TOTAL TEMP RATIO	WHEEL SPEED IN	WHEEL SPEED OUT	STAGE PRESSURE RATIO	STAGE ADIABATIC EFFICIENCY	STAGE POLYTROPIC EFFICIENCY	
0.599	0.339	9.15	1.017	0.0	0.0	1.038	64.5	64.7	1
0.609	0.375	10.57	1.019	0.0	0.0	1.054	78.8	78.9	3
0.618	0.399	11.76	1.022	0.0	0.0	1.067	86.5	86.7	5
0.626	0.419	12.83	1.023	0.0	0.0	1.077	91.4	91.5	7
0.643	0.453	15.23	1.028	0.0	0.0	1.097	96.0	96.1	9
0.656	0.476	17.34	1.032	0.0	0.0	1.112	97.2	97.3	11
0.668	0.495	19.29	1.035	0.0	0.0	1.126	97.5	97.6	13
0.679	0.510	21.06	1.038	0.0	0.0	1.137	97.3	97.4	15
0.688	0.523	22.74	1.042	0.0	0.0	1.148	96.8	96.9	17
0.696	0.534	24.33	1.044	0.0	0.0	1.157	96.1	96.1	19
0.704	0.543	25.85	1.047	0.0	0.0	1.166	95.1	95.2	21
0.711	0.551	27.27	1.050	0.0	0.0	1.173	94.1	94.2	23
0.718	0.558	28.65	1.052	0.0	0.0	1.181	93.3	93.4	25
0.724	0.564	30.18	1.055	0.0	0.0	1.188	91.9	92.1	27
0.730	0.569	31.48	1.057	0.0	0.0	1.194	90.9	91.2	29
0.733	0.571	32.47	1.059	0.0	0.0	1.198	90.0	90.2	31
0.733	0.567	32.87	1.060	0.0	0.0	1.198	88.8	89.1	33
0.730	0.560	32.83	1.059	0.0	0.0	1.194	87.5	87.8	35
0.725	0.549	32.44	1.059	0.0	0.0	1.189	86.3	86.6	37
0.715	0.531	31.38	1.057	0.0	0.0	1.178	84.7	85.1	39
0.701	0.504	29.64	1.053	0.0	0.0	1.163	82.3	82.7	41

S.L. NO.	DIFFUSION FACTOR	OMEGA BAR	DELTA PS/Q	SOLIDITY	TOTAL TURNING	ABSOLUTE FLOW ANGLE INLET	ABSOLUTE FLOW ANGLE EXIT	K.&S. EQU. DIFFUSION FACTOR
1	0.549	0.183	0.476	2.122	33.90	33.90	0.00	1.784
3	0.504	0.142	0.454	2.061	33.88	33.88	0.00	1.704
5	0.475	0.116	0.437	2.008	33.72	33.72	0.00	1.657
7	0.455	0.098	0.423	1.961	33.51	33.51	0.00	1.626
9	0.425	0.071	0.397	1.864	33.12	33.12	0.00	1.584
11	0.408	0.056	0.379	1.786	32.81	32.81	0.00	1.563
13	0.398	0.046	0.364	1.719	32.52	32.52	0.00	1.550
15	0.391	0.040	0.353	1.660	32.26	32.26	0.00	1.542
* 17	0.387	0.037	0.343	1.608	32.03	32.03	0.00	1.537
* 19	0.385	0.035	0.334	1.562	31.85	31.85	0.00	1.535
21	0.384	0.035	0.326	1.521	31.73	31.73	0.00	1.535
23	0.385	0.036	0.320	1.483	31.64	31.64	0.00	1.535
25	0.386	0.038	0.313	1.448	31.57	31.57	0.00	1.537

27	0.388	0.041	0.308	1.416	31.61	0.00	1.540
29	0.392	0.044	0.304	1.387	31.59	0.00	1.544
31	0.396	0.048	0.302	1.359	31.52	0.00	1.550
33	0.403	0.054	0.304	1.333	31.34	0.00	1.559
35	0.412	0.060	0.310	1.309	31.10	0.00	1.571
37	0.424	0.067	0.318	1.285	30.79	0.00	1.587
39	0.440	0.075	0.334	1.263	30.37	0.00	1.609
41	0.463	0.087	0.358	1.241	29.86	0.00	1.642

7 AUG 91 LOW NOISE FAN STUDY. BPR = 14:1, RC = 1.382, WAC = 1036.9 INTERSTAGE DATA
PAGE 48
STATION NO. 48
ANNULUS EXIT 48 16:20:15 91/219 COPY 1 OF 1

MASS FLOW RATE 907.30 FLOW RATE/SQ. FT. 38.80 (CORRECTED) MASS AVE. TOTAL PRESSURE 20.29
CORRECTED FLOW RATE 691.64 ANNULUS AREA 17.82 SQ. FT =2566.8 SQ.IN MASS AVE. TOTAL TEMPERATURE 574.8

RADIUS INCHES	AXIAL VELOCITY	WHIRL VELOCITY	RADIAL VELOCITY	TOTAL PRESSURE	STATIC PRESSURE	TEMPERATURES TOTAL	TEMPERATURES STATIC	ABSOLUTE VELOCITY	ABSOLUTE MACH NO.	MER. VELOCITY	PERCENT SPAN	S.L. NO.
21.162	390.5	0.0	-10.60	17.58	16.21	554.6	541.9	390.6	0.342	390.6	1.1	1
21.836	432.2	0.0	-10.88	17.90	16.21	556.2	540.6	432.3	0.379	432.3	5.8	3
22.437	462.2	0.0	-11.38	18.16	16.21	557.5	539.7	462.3	0.406	462.3	9.9	5
22.988	486.0	0.0	-12.11	18.39	16.22	558.8	539.1	486.2	0.427	486.2	13.7	7
24.170	528.5	0.0	-14.55	18.83	16.24	561.5	538.3	528.7	0.465	528.7	21.9	9
25.196	559.7	0.0	-17.70	19.19	16.26	564.0	537.9	560.0	0.493	560.0	28.9	11
26.144	585.8	0.0	-21.49	19.51	16.27	566.4	537.8	586.2	0.516	586.2	35.5	13
27.022	607.9	0.0	-25.76	19.78	16.28	568.5	537.7	608.4	0.535	608.4	41.5	15
27.843	627.3	0.0	-30.46	20.04	16.28	570.6	537.8	628.1	0.552	628.1	47.2	17
28.619	645.0	0.0	-35.57	20.27	16.28	572.6	537.9	646.0	0.568	646.0	52.5	19
29.355	661.4	0.0	-41.08	20.48	16.27	574.6	538.0	662.7	0.583	662.7	57.6	21
30.056	676.9	0.0	-46.99	20.67	16.25	576.6	538.2	678.5	0.597	678.5	62.4	23
30.728	692.2	0.0	-53.34	20.87	16.23	578.5	538.4	694.2	0.610	694.2	67.1	25
31.373	706.9	0.0	-60.12	21.05	16.19	580.6	538.7	709.5	0.624	709.5	71.5	27
31.994	720.5	0.0	-67.29	21.21	16.15	582.5	538.9	723.7	0.636	723.7	75.8	29
32.595	731.7	0.0	-74.79	21.32	16.10	584.0	539.0	735.5	0.646	735.5	79.9	31
33.179	737.9	0.0	-82.45	21.35	16.04	585.0	539.1	742.5	0.652	742.5	84.0	33
33.753	740.9	0.0	-90.66	21.33	15.98	585.6	539.2	746.4	0.656	746.4	87.9	35
34.318	741.6	0.0	-99.67	21.25	15.90	585.8	539.2	748.3	0.657	748.3	91.8	37
34.878	736.9	0.0	-109.34	21.09	15.82	585.4	539.2	745.0	0.654	745.0	95.7	39
35.439	725.7	0.0	-120.07	20.82	15.72	584.2	539.2	735.6	0.646	735.6	99.5	41

MASS FLOW RATE 907.30 FLOW RATE/SQ. FT. 38.68 (CORRECTED) MASS AVE. TOTAL PRESSURE 20.29
CORRECTED FLOW RATE 691.64 ANNULUS AREA 17.88 SQ. FT =2574.6 SQ.IN MASS AVE. TOTAL TEMPERATURE 574.8

RADIUS INCHES	AXIAL VELOCITY	WHIRL VELOCITY	RADIAL VELOCITY	TOTAL PRESSURE	STATIC PRESSURE	TEMPERATURES TOTAL	TEMPERATURES STATIC	ABSOLUTE VELOCITY	ABSOLUTE MACH NO.	MER. VELOCITY	PERCENT SPAN	S.L. NO.
21.242	374.8	0.0	-3.96	17.58	16.31	554.6	542.9	374.8	0.328	374.8	1.7	1
21.933	419.3	0.0	-4.44	17.90	16.30	556.2	541.5	419.4	0.368	419.4	6.4	3
22.545	451.4	0.0	-4.86	18.16	16.30	557.5	540.6	451.5	0.396	451.5	10.6	5
23.103	477.1	0.0	-5.27	18.39	16.30	558.8	539.8	477.1	0.419	477.1	14.5	7
24.293	523.2	0.0	-6.31	18.83	16.29	561.5	538.8	523.2	0.460	523.2	22.7	9
25.319	557.3	0.0	-7.40	19.19	16.28	564.0	538.2	557.3	0.490	557.3	29.8	11
26.264	585.9	0.0	-8.56	19.51	16.27	566.4	537.8	585.9	0.515	585.9	36.3	13
27.136	610.1	0.0	-9.71	19.78	16.26	568.5	537.5	610.2	0.537	610.2	42.3	15
27.952	631.6	0.0	-10.81	20.04	16.24	570.6	537.4	631.7	0.556	631.7	47.9	17
28.719	651.1	0.0	-11.84	20.27	16.22	572.6	537.3	651.2	0.573	651.2	53.2	19
29.447	669.2	0.0	-12.77	20.48	16.19	574.6	537.3	669.3	0.589	669.3	58.2	21
30.141	686.3	0.0	-13.56	20.67	16.16	576.6	537.3	686.5	0.604	686.5	63.0	23
30.804	703.2	0.0	-14.21	20.87	16.12	578.5	537.3	703.3	0.619	703.3	67.6	25
31.440	719.4	0.0	-14.69	21.05	16.07	580.6	537.5	719.6	0.633	719.6	72.0	27
32.052	734.6	0.0	-14.95	21.21	16.01	582.5	537.5	734.7	0.646	734.7	76.2	29
32.644	747.4	0.0	-14.96	21.32	15.95	584.0	537.5	747.5	0.658	747.5	80.3	31
33.219	755.4	0.0	-14.63	21.35	15.87	585.0	537.5	755.6	0.665	755.6	84.2	33
33.782	760.6	0.0	-13.97	21.33	15.79	585.6	537.4	760.7	0.669	760.7	88.1	35
34.336	763.8	0.0	-12.94	21.25	15.70	585.8	537.2	763.9	0.672	763.9	91.9	37
34.884	762.3	0.0	-11.44	21.09	15.59	585.4	537.0	762.4	0.671	762.4	95.7	39
35.430	755.2	0.0	-9.32	20.82	15.48	584.2	536.8	755.3	0.665	755.3	99.5	41

7 AUG 91 LOW NOISE FAN STUDY. BPR = 14:1, RC = 1.382, WAC = 1036.9 INTERSTAGE DATA
PAGE 50
STATION NO. 50
ANNULUS EXIT 50 16:20:15 91/219 COPY 1 OF 1

MASS FLOW RATE 907.30 FLOW RATE/SQ. FT. 38.68 (CORRECTED) MASS AVE. TOTAL PRESSURE 20.29
CORRECTED FLOW RATE 691.64 ANNULUS AREA 17.88 SQ. FT =2574.6 SQ.IN MASS AVE. TOTAL TEMPERATURE 574.8

RADIUS INCHES	AXIAL VELOCITY	WHIRL VELOCITY	RADIAL VELOCITY	TOTAL PRESSURE	STATIC PRESSURE	TEMPERATURES TOTAL	TEMPERATURES STATIC	ABSOLUTE VELOCITY	ABSOLUTE MACH NO.	MER. VELOCITY	PERCENT SPAN	S.L. NO.
21.166	383.2	0.0	-4.01	17.58	16.26	554.6	542.4	383.2	0.336	383.2	1.1	1
21.848	426.8	0.0	-5.18	17.90	16.25	556.2	541.0	426.8	0.374	426.8	5.8	3
22.454	458.4	0.0	-6.10	18.16	16.24	557.5	540.0	458.5	0.402	458.5	10.0	5
23.007	483.8	0.0	-6.88	18.39	16.24	558.8	539.3	483.8	0.425	483.8	13.8	7
24.190	529.4	0.0	-8.44	18.83	16.23	561.5	538.2	529.5	0.466	529.5	22.0	9
25.212	563.2	0.0	-9.72	19.19	16.22	564.0	537.6	563.3	0.496	563.3	29.0	11
26.154	591.4	0.0	-10.86	19.51	16.22	566.4	537.2	591.5	0.521	591.5	35.5	13
27.024	615.1	0.0	-11.86	19.78	16.21	568.5	537.0	615.2	0.541	615.2	41.5	15
27.838	635.8	0.0	-12.72	20.04	16.20	570.6	536.9	635.9	0.560	635.9	47.1	17
28.606	654.3	0.0	-13.43	20.27	16.18	572.6	537.0	654.4	0.576	654.4	52.4	19
29.335	671.1	0.0	-13.98	20.48	16.17	574.6	537.1	671.3	0.591	671.3	57.5	21
30.031	686.6	0.0	-14.34	20.67	16.15	576.6	537.3	686.7	0.604	686.7	62.3	23
30.697	701.5	0.0	-14.52	20.87	16.14	578.5	537.5	701.6	0.617	701.6	66.8	25
31.336	715.4	0.0	-14.47	21.05	16.12	580.6	538.0	715.5	0.629	715.5	71.3	27
31.953	727.7	0.0	-14.17	21.21	16.10	582.5	538.4	727.8	0.640	727.8	75.5	29
32.550	737.1	0.0	-13.57	21.32	16.08	584.0	538.8	737.2	0.648	737.2	79.6	31
33.133	741.1	0.0	-12.60	21.35	16.06	585.0	539.3	741.2	0.651	741.2	83.6	33
33.705	741.4	0.0	-11.23	21.33	16.04	585.6	539.8	741.5	0.651	741.5	87.6	35
34.269	738.8	0.0	-9.43	21.25	16.02	585.8	540.4	738.9	0.648	738.9	91.5	37
34.830	730.3	0.0	-7.09	21.09	16.00	585.4	541.0	730.4	0.641	730.4	95.3	39
35.392	714.6	0.0	-4.07	20.82	15.98	584.2	541.7	714.6	0.626	714.6	99.2	41

7 AUG 91 LOW NOISE FAN STUDY. BPR = 14:1, RC = 1.382, WAC = 1036.9 INTERSTAGE DATA
PAGE 51
STATION NO. 51
ANNULUS EXIT 51 16:20:15 91/219 COPY 1 OF 1

MASS FLOW RATE 907.30 FLOW RATE/SQ. FT. 38.68 (CORRECTED) MASS AVE. TOTAL PRESSURE 20.29
CORRECTED FLOW RATE 691.64 ANNULUS AREA 17.88 SQ. FT =2575.0 SQ.IN MASS AVE. TOTAL TEMPERATURE 574.8

RADIUS INCHES	AXIAL VELOCITY	WHIRL VELOCITY	RADIAL VELOCITY	TOTAL PRESSURE	STATIC PRESSURE	TEMPERATURES TOTAL	TEMPERATURES STATIC	ABSOLUTE VELOCITY	ABSOLUTE MACH NO.	MER. VELOCITY	PERCENT SPAN	S.L. NO.
21.200	380.6	0.0	-0.34	17.58	16.27	554.6	542.5	380.6	0.333	380.6	1.4	1
21.885	424.6	0.0	-1.24	17.90	16.27	556.2	541.2	424.6	0.372	424.6	6.1	3
22.492	456.5	0.0	-1.93	18.16	16.26	557.5	540.2	456.5	0.401	456.5	10.3	5
23.046	482.1	0.0	-2.49	18.39	16.25	558.8	539.4	482.2	0.423	482.2	14.1	7
24.229	528.5	0.0	-3.49	18.83	16.24	561.5	538.3	528.5	0.465	528.5	22.3	9
25.250	562.9	0.0	-4.19	19.19	16.23	564.0	537.6	562.9	0.495	562.9	29.3	11
26.191	591.7	0.0	-4.71	19.51	16.21	566.4	537.2	591.8	0.521	591.8	35.8	13
27.059	616.0	0.0	-5.08	19.78	16.20	568.5	536.9	616.0	0.542	616.0	41.8	15
27.871	637.2	0.0	-5.32	20.04	16.18	570.6	536.8	637.2	0.561	637.2	47.4	17
28.637	656.0	0.0	-5.45	20.27	16.16	572.6	536.8	656.1	0.578	656.1	52.7	19
29.364	673.2	0.0	-5.48	20.48	16.15	574.6	536.9	673.2	0.593	673.2	57.7	21
30.057	688.9	0.0	-5.40	20.67	16.13	576.6	537.1	688.9	0.606	688.9	62.4	23
30.721	703.9	0.0	-5.23	20.87	16.11	578.5	537.3	703.9	0.619	703.9	67.0	25
31.359	717.8	0.0	-4.97	21.05	16.09	580.6	537.7	717.8	0.631	717.8	71.4	27
31.974	730.0	0.0	-4.60	21.21	16.07	582.5	538.1	730.0	0.642	730.0	75.7	29
32.570	739.3	0.0	-4.14	21.32	16.05	584.0	538.5	739.3	0.650	739.3	79.8	31
33.151	743.0	0.0	-3.56	21.35	16.04	585.0	539.1	743.1	0.653	743.1	83.8	33
33.722	743.0	0.0	-2.86	21.33	16.02	585.6	539.6	743.0	0.652	743.0	87.7	35
34.285	740.0	0.0	-2.04	21.25	16.01	585.8	540.2	740.0	0.649	740.0	91.6	37
34.845	730.8	0.0	-1.09	21.09	16.00	585.4	540.9	730.8	0.641	730.8	95.4	39
35.407	714.3	0.0	0.02	20.82	15.99	584.2	541.8	714.3	0.626	714.3	99.3	41

7 AUG 91 LOW NOISE FAN STUDY. BPR = 14:1, RC = 1.382, WAC = 1036.9 INTERSTAGE DATA
STATION NO. 52 PAGE 52
ANNULUS EXIT 52 16:20:15 91/219 COPY 1 OF 1

MASS FLOW RATE 907.30 FLOW RATE/SQ. FT. 38.68 (CORRECTED) MASS AVE. TOTAL PRESSURE 20.29
CORRECTED FLOW RATE 691.64 ANNULUS AREA 17.88 SQ. FT =2575.0 SQ.IN MASS AVE. TOTAL TEMPERATURE 574.8

RADIUS INCHES	AXIAL VELOCITY	WHIRL VELOCITY	RADIAL VELOCITY	TOTAL PRESSURE	STATIC PRESSURE	TEMPERATURES TOTAL	TEMPERATURES STATIC	ABSOLUTE VELOCITY	ABSOLUTE MACH NO.	MER. VELOCITY	PERCENT SPAN	S.L. NO.
21.162	389.5	0.0	-0.35	17.58	16.21	554.6	542.0	389.5	0.341	389.5	1.1	1
21.836	432.1	0.0	-1.25	17.90	16.21	556.2	540.6	432.1	0.379	432.1	5.8	3
22.437	463.0	0.0	-1.92	18.16	16.21	557.5	539.7	463.0	0.407	463.0	9.9	5
22.987	487.9	0.0	-2.46	18.39	16.20	558.8	538.9	487.9	0.429	487.9	13.7	7
24.164	532.8	0.0	-3.39	18.83	16.20	561.5	537.9	532.8	0.469	532.8	21.8	9
25.182	566.1	0.0	-4.01	19.19	16.20	564.0	537.4	566.1	0.498	566.1	28.8	11
26.122	593.7	0.0	-4.45	19.51	16.19	566.4	537.0	593.8	0.523	593.8	35.3	13
26.991	616.9	0.0	-4.75	19.78	16.19	568.5	536.9	616.9	0.543	616.9	41.3	15
27.805	637.0	0.0	-4.93	20.04	16.18	570.6	536.8	637.0	0.561	637.0	46.9	17
28.573	654.8	0.0	-5.02	20.27	16.18	572.6	536.9	654.8	0.576	654.8	52.2	19
29.303	670.8	0.0	-5.01	20.48	16.17	574.6	537.1	670.8	0.590	670.8	57.2	21
29.999	685.4	0.0	-4.93	20.67	16.17	576.6	537.5	685.4	0.603	685.4	62.0	23
30.667	699.3	0.0	-4.78	20.87	16.16	578.5	537.8	699.3	0.615	699.3	66.6	25
31.309	712.1	0.0	-4.56	21.05	16.16	580.6	538.4	712.1	0.626	712.1	71.1	27
31.928	723.2	0.0	-4.28	21.21	16.16	582.5	538.9	723.2	0.635	723.2	75.3	29
32.528	731.4	0.0	-3.92	21.32	16.15	584.0	539.5	731.4	0.642	731.4	79.5	31
33.113	734.0	0.0	-3.50	21.35	16.15	585.0	540.2	734.0	0.644	734.0	83.5	33
33.689	732.9	0.0	-3.00	21.33	16.15	585.6	540.9	732.9	0.643	732.9	87.5	35
34.258	728.8	0.0	-2.44	21.25	16.15	585.8	541.6	728.8	0.639	728.8	91.4	37
34.824	718.7	0.0	-1.83	21.09	16.15	585.4	542.4	718.7	0.629	718.7	95.3	39
35.392	701.1	0.0	-1.14	20.82	16.15	584.2	543.3	701.1	0.614	701.1	99.2	41

7 AUG 91 LOW NOISE FAN STUDY. BPR = 14:1, RC = 1.382, WAC = 1036.9 INTERSTAGE DATA
STATION NO. 53 PAGE 53
ANNULUS EXIT 53 16:20:15 91/219 COPY 1 OF 1

MASS FLOW RATE 907.30 FLOW RATE/SQ. FT. 38.68 (CORRECTED) MASS AVE. TOTAL PRESSURE 20.29
CORRECTED FLOW RATE 691.64 ANNULUS AREA 17.88 SQ. FT =2575.0 SQ.IN MASS AVE. TOTAL TEMPERATURE 574.8

RADIUS INCHES	AXIAL VELOCITY	WHIRL VELOCITY	RADIAL VELOCITY	TOTAL PRESSURE	STATIC PRESSURE	TEMPERATURES TOTAL	TEMPERATURES STATIC	ABSOLUTE VELOCITY	ABSOLUTE MACH NO.	MER. VELOCITY	PERCENT SPAN	S.L. NO.
21.196	386.8	0.0	0.22	17.58	16.23	554.6	542.1	386.8	0.339	386.8	1.4	1
21.873	429.7	0.0	-0.38	17.90	16.23	556.2	540.8	429.7	0.377	429.7	6.0	3
22.475	460.9	0.0	-0.86	18.16	16.22	557.5	539.8	460.9	0.405	460.9	10.2	5
23.026	486.1	0.0	-1.26	18.39	16.22	558.8	539.1	486.1	0.427	486.1	14.0	7
24.204	531.6	0.0	-1.97	18.83	16.21	561.5	538.0	531.6	0.468	531.6	22.1	9
25.222	565.5	0.0	-2.44	19.19	16.20	564.0	537.4	565.5	0.498	565.5	29.1	11
26.160	593.7	0.0	-2.76	19.51	16.19	566.4	537.0	593.7	0.523	593.7	35.6	13
27.028	617.5	0.0	-2.96	19.78	16.18	568.5	536.8	617.5	0.544	617.5	41.6	15
27.840	638.1	0.0	-3.06	20.04	16.17	570.6	536.7	638.1	0.562	638.1	47.2	17
28.606	656.4	0.0	-3.09	20.27	16.16	572.6	536.8	656.4	0.578	656.4	52.4	19
29.334	672.8	0.0	-3.06	20.48	16.15	574.6	536.9	672.8	0.592	672.8	57.5	21
30.028	687.8	0.0	-2.98	20.67	16.14	576.6	537.2	687.8	0.605	687.8	62.2	23
30.694	702.1	0.0	-2.87	20.87	16.13	578.5	537.5	702.1	0.618	702.1	66.8	25
31.333	715.2	0.0	-2.72	21.05	16.12	580.6	538.0	715.2	0.629	715.2	71.2	27
31.950	726.7	0.0	-2.54	21.21	16.11	582.5	538.5	726.7	0.639	726.7	75.5	29
32.548	735.1	0.0	-2.34	21.32	16.11	584.0	539.1	735.1	0.646	735.1	79.6	31
33.132	738.1	0.0	-2.11	21.35	16.10	585.0	539.7	738.1	0.648	738.1	83.6	33
33.705	737.2	0.0	-1.85	21.33	16.09	585.6	540.4	737.2	0.647	737.2	87.6	35
34.272	733.5	0.0	-1.58	21.25	16.09	585.8	541.0	733.5	0.643	733.5	91.5	37
34.835	723.7	0.0	-1.30	21.09	16.09	585.4	541.8	723.7	0.634	723.7	95.4	39
35.401	706.6	0.0	-1.00	20.82	16.08	584.2	542.7	706.6	0.619	706.6	99.3	41

7 AUG 91 LOW NOISE FAN STUDY. BPR = 14:1, RC = 1.382, WAC = 1036.9 INTERSTAGE DATA
PAGE 54
STATION NO. 54
ANNULUS EXIT 54 16:20:15 91/219 COPY 1 OF 1

MASS FLOW RATE 907.30 FLOW RATE/SQ. FT. 38.68 (CORRECTED) MASS AVE. TOTAL PRESSURE 20.29
CORRECTED FLOW RATE 691.64 ANNULUS AREA 17.88 SQ. FT =2575.0 SQ.IN MASS AVE. TOTAL TEMPERATURE 574.8

RADIUS INCHES	AXIAL VELOCITY	WHIRL VELOCITY	RADIAL VELOCITY	TOTAL PRESSURE	STATIC PRESSURE	TEMPERATURES TOTAL	TEMPERATURES STATIC	ABSOLUTE VELOCITY	ABSOLUTE MACH NO.	MER. VELOCITY	PERCENT SPAN	S.L. NO.
21.164	393.8	0.0	0.00	17.58	16.18	554.6	541.7	393.8	0.345	393.8	1.1	1
21.833	435.8	0.0	0.00	17.90	16.18	556.2	540.4	435.8	0.382	435.8	5.7	3
22.429	466.4	0.0	0.00	18.16	16.18	557.5	539.4	466.4	0.410	466.4	9.9	5
22.977	491.0	0.0	0.00	18.39	16.18	558.8	538.7	491.0	0.431	491.0	13.6	7
24.149	535.2	0.0	0.00	18.83	16.18	561.5	537.7	535.2	0.471	535.2	21.7	9
25.165	567.9	0.0	0.00	19.19	16.18	564.0	537.2	567.9	0.500	567.9	28.7	11
26.104	595.1	0.0	0.00	19.51	16.18	566.4	536.9	595.1	0.524	595.1	35.2	13
26.972	617.8	0.0	0.00	19.78	16.18	568.5	536.8	617.8	0.544	617.8	41.2	15
27.786	637.4	0.0	0.00	20.04	16.18	570.6	536.8	637.4	0.561	637.4	46.8	17
28.555	654.8	0.0	0.00	20.27	16.18	572.6	536.9	654.8	0.576	654.8	52.1	19
29.285	670.4	0.0	0.00	20.48	16.18	574.6	537.2	670.4	0.590	670.4	57.1	21
29.982	684.6	0.0	0.00	20.67	16.18	576.6	537.6	684.6	0.602	684.6	61.9	23
30.651	698.0	0.0	0.00	20.87	16.18	578.5	538.0	698.0	0.614	698.0	66.5	25
31.294	710.5	0.0	0.00	21.05	16.18	580.6	538.6	710.5	0.625	710.5	71.0	27
31.914	721.3	0.0	0.00	21.21	16.18	582.5	539.2	721.3	0.634	721.3	75.2	29
32.516	729.2	0.0	0.00	21.32	16.18	584.0	539.8	729.2	0.640	729.2	79.4	31
33.102	731.6	0.0	0.00	21.35	16.18	585.0	540.5	731.6	0.642	731.6	83.4	33
33.679	730.3	0.0	0.00	21.33	16.18	585.6	541.2	730.3	0.640	730.3	87.4	35
34.250	726.1	0.0	0.00	21.25	16.18	585.8	541.9	726.1	0.636	726.1	91.3	37
34.817	715.9	0.0	0.00	21.09	16.18	585.4	542.7	715.9	0.627	715.9	95.2	39
35.387	698.4	0.0	0.00	20.82	16.18	584.2	543.7	698.4	0.611	698.4	99.2	41

7 AUG 91 LOW NOISE FAN STUDY. BPR = 14:1, RC = 1.382, WAC = 1036.9

PERF. SUMMARY
PAGE 1
16:20:15 91/219 COPY 1 OF 1

		D-FACTOR			EQUIVALENT DIFFUSION FACTOR			LOAD COEFFICIENT (MEAN WHEEL SPEED)			MACH NO.	SPECIFIC FLOW		FLOW
		HUB	MEAN	TIP	HUB	MEAN	TIP	HUB	MEAN	TIP		IN	OUT	COEFF.
ROTOR	1	0.249	0.421	0.418	1.468	1.593	1.522	0.314	0.623	0.769	1.127	41.53	34.49	0.933
STATOR	1	0.394	0.401	0.483	1.563	1.595	1.682				0.644	34.40	34.32	
ROTOR	2	0.385	0.376	0.392	1.727	1.636	1.658	0.842	0.614	0.582	0.647	34.68	33.67	1.097
STATOR	2	0.363	0.331	0.359	1.607	1.482	1.509				0.708	35.27	35.31	
STATOR	3	0.549	0.384	0.463	1.510	1.528	1.537				0.599	37.20	35.62	

		PRESSURE RATIO	CUMULATIVE PRESSURE RATIO	ADIABATIC EFFICIENCY	CUMULATIVE ADIABATIC EFFICIENCY	EXIT FLOW ANGLE HUB	EXIT FLOW ANGLE TIP	TOTAL TURNING HUB	TOTAL TURNING TIP	INLET AXIAL VELOCITY MEAN	HORSE POWER
ROTOR	1	1.378	1.378	94.1	94.1	0.0	44.6	25.7	11.0	667.7	18631.5
STATOR	1	1.195	1.195	87.7	87.7	-3.0	0.0	35.7	37.0	554.4	
ROTOR	2	1.168	1.395	95.5	91.0	0.5	30.6	38.8	18.8	544.4	1145.3
STATOR	2	1.157	1.382	89.8	88.4	0.0	0.0	34.1	26.9	561.7	
STATOR	3	1.156	1.381	91.9	89.3	0.0	0.0	33.9	29.9	670.1	

7 AUG 91 LOW NOISE FAN STUDY. BPR = 14:1, RC = 1.382, WAC = 1036.9

FLOW PATH INFO
COPY 1 OF 1

16:20:15 91/219

ALL DIMENSIONS ARE IN INCHES

STA NO.		AXIAL COORDINATE		AXIAL LENGTH		RADIUS		AREA	DISPLACEMENT THICKNESS		SHAPE FACTOR		BLOCKAGE FACTOR		AXIAL VELOCITY	
		HUB	TIP	HUB	TIP	HUB	TIP		HUB	TIP	HUB	TIP	HUB	TIP	HUB	TIP
1		-35.294	-35.294			2.800	35.506	3935.81	0.002	0.000	1.40	1.40	1.000	1.000	566.	566.
2		-33.738	-33.738	1.556	1.556	2.800	35.506	3935.81	0.009	0.006	1.55	1.55	1.000	1.000	539.	574.
3		-32.182	-32.182	1.556	1.556	2.800	35.506	3935.81	0.012	0.011	1.50	1.53	1.000	0.999	554.	570.
4		-30.626	-30.626	1.556	1.556	2.800	35.506	3935.81	0.018	0.014	1.52	1.51	1.000	0.999	534.	577.
5		-29.070	-29.070	1.556	1.556	2.800	35.506	3935.81	0.021	0.019	1.48	1.51	1.000	0.999	538.	575.
6		-27.514	-27.514	1.556	1.556	2.800	35.506	3935.81	0.028	0.022	1.52	1.49	1.000	0.999	519.	580.
7		-25.958	-25.958	1.556	1.556	2.800	35.506	3935.81	0.033	0.025	1.49	1.50	1.000	0.999	508.	580.
8		-24.402	-24.402	1.556	1.556	2.800	35.506	3935.81	0.047	0.028	1.59	1.48	1.000	0.998	477.	585.
9		-22.846	-22.846	1.556	1.556	2.900	35.506	3934.02	0.049	0.031	1.49	1.48	1.000	0.998	463.	586.
10		-21.290	-21.290	1.556	1.556	3.080	35.506	3930.63	0.055	0.033	1.50	1.47	1.000	0.998	447.	592.
11		-19.734	-19.734	1.556	1.556	3.350	35.506	3925.18	0.056	0.036	1.47	1.48	1.000	0.998	433.	594.
12		-18.178	-18.178	1.556	1.556	3.700	35.506	3917.43	0.060	0.038	1.50	1.47	1.000	0.998	414.	600.
13		-16.622	-16.622	1.556	1.556	4.200	35.506	3905.02	0.055	0.041	1.43	1.47	1.000	0.998	401.	605.
14		-15.066	-15.066	1.556	1.556	4.800	35.506	3888.05	0.050	0.042	1.39	1.46	1.000	0.998	390.	612.
15		-12.000	-12.000	3.066	3.066	6.540	35.506	3826.07	0.028	0.045	1.36	1.47	1.000	0.997	422.	625.
16		-9.000	-9.000	3.000	3.000	8.240	35.506	3747.13	0.021	0.047	1.42	1.46	1.000	0.997	478.	643.
17		-6.400	-6.400	2.600	2.600	9.600	35.506	3670.91	0.020	0.048	1.46	1.46	1.000	0.997	516.	663.
18		-4.324	-5.108	2.076	1.292	10.646	35.506	3606.17	0.019	0.045	1.48	1.44	1.000	0.997	563.	684.
19	ROTOR	5.525	6.287	9.849	11.395	14.200	35.506	3329.09	0.041	0.104	1.49	1.66	0.999	0.993	578.	611.
20		6.600	6.600	1.075	0.313	14.540	35.506	3296.27	0.055	0.097	1.72	1.53	0.998	0.993	556.	611.
21		7.587	7.609	0.987	1.009	14.850	19.230	468.95	0.043	0.000	1.43	1.40	0.991	1.000	572.	528.
22	VANE	10.138	10.116	2.551	2.507	15.510	19.760	470.92	0.068	0.014	1.64	1.51	0.986	0.996	541.	489.
23		10.955	11.170	0.817	1.054	15.640	19.810	465.03	0.047	0.019	1.27	1.50	0.990	0.995	570.	477.
24	ROTOR	13.115	12.769	2.161	1.599	15.730	19.600	431.26	0.040	0.021	1.36	1.45	0.991	0.994	615.	486.
25		13.700	14.600	0.585	1.831	15.600	19.210	406.87	0.041	0.023	1.44	1.44	0.990	0.993	621.	498.
26		14.400	16.200	0.700	1.600	15.440	18.750	404.70	0.038	0.024	1.43	1.44	0.990	0.992	630.	503.
27	VANE	16.800	18.400	2.400	2.200	14.000	17.750	406.67	0.047	0.041	1.48	1.54	0.989	0.988	551.	434.
28		17.148	19.600	0.348	1.200	13.750	17.000	393.25	0.049	0.029	1.48	1.30	0.987	0.990	527.	457.
29		18.079	20.800	0.931	1.200	12.679	16.200	403.71	0.135	0.029	2.69	1.36	0.966	0.991	423.	480.
30		19.040	22.000	0.960	1.200	11.499	15.420	415.48	0.249	0.026	3.00	1.37	0.945	0.992	375.	525.
31		20.055	23.200	1.015	1.200	10.300	14.700	424.76	0.386	0.023	3.00	1.39	0.926	0.994	358.	612.
32		21.309	24.100	1.254	0.900	9.034	14.300	436.91	0.627	0.023	3.00	1.45	0.905	0.995	373.	684.
33		22.812	25.000	1.503	0.900	8.015	14.080	447.57	0.957	0.028	1.12	1.56	0.879	0.994	417.	701.
34		24.824	25.500	2.012	0.500	7.493	14.000	441.73	0.719	0.035	3.00	1.72	0.919	0.993	409.	685.
35		26.452	26.452	1.629	0.952	7.483	13.980	438.08	0.388	0.060	1.15	2.04	0.957	0.988	426.	627.
36		28.008	28.008	1.556	1.556	7.483	13.960	436.33	0.275	0.083	1.38	1.93	0.970	0.983	465.	564.
37		29.564	29.564	1.556	1.556	7.483	13.960	436.33	0.205	0.086	1.14	1.65	0.978	0.983	484.	539.
38		31.120	31.120	1.556	1.556	7.483	13.960	436.33	0.181	0.091	1.13	1.54	0.980	0.982	501.	525.
39		32.676	32.676	1.556	1.556	7.483	13.960	436.33	0.192	0.088	1.23	1.42	0.979	0.982	508.	522.
40		34.232	34.232	1.556	1.556	7.483	13.960	436.33	0.178	0.096	1.20	1.45	0.981	0.981	517.	516.
41		7.608	7.608	-26.624	-26.624	19.820	35.506	2726.32	0.000	0.091	1.40	1.44	1.000	0.993	472.	621.
42		9.706	9.706	2.098	2.097	20.500	35.506	2640.18	0.007	0.085	1.62	1.41	1.000	0.993	711.	639.
43		11.816	11.816	2.110	2.110	20.500	35.506	2640.18	0.019	0.083	1.69	1.43	0.999	0.993	641.	655.
44		13.926	13.926	2.110	2.110	20.500	35.506	2640.18	0.029	0.087	1.63	1.48	0.999	0.993	600.	662.
45		17.000	17.000	3.074	3.074	20.500	35.506	2640.18	0.048	0.076	1.63	1.43	0.998	0.994	550.	701.
46		19.600	19.600	2.600	2.600	20.500	35.506	2640.18	0.049	0.095	1.49	1.59	0.998	0.992	554.	687.
47	VANE	25.000	25.000	5.400	5.400	21.000	36.506	2801.23	0.375	0.211	3.00	2.02	0.982	0.983	387.	576.
48		27.678	27.679	2.678	2.679	21.000	35.506	2575.00	0.162	0.067	1.29	1.26	0.992	0.994	390.	726.
49		30.500	30.500	2.822	2.821	21.000	35.506	2575.00	0.242	0.075	1.65	1.45	0.988	0.993	375.	755.
50		32.500	32.500	2.000	2.000	21.000	35.506	2575.00	0.166	0.113	1.19	1.77	0.991	0.990	383.	715.
51		34.500	34.500	2.000	2.000	21.000	35.506	2575.00	0.200	0.098	1.39	1.48	0.990	0.991	381.	714.
52		36.500	36.500	2.000	2.000	21.000	35.506	2575.00	0.162	0.113	1.19	1.56	0.992	0.990	389.	701.
53		38.500	38.500	2.000	2.000	21.000	35.506	2575.00	0.196	0.105	1.39	1.43	0.990	0.991	387.	707.
54		40.500	40.500	2.000	2.000	21.000	35.506	2575.00	0.164	0.119	1.21	1.52	0.992	0.990	394.	698.

7 AUG 91 LOW NOISE FAN STUDY. BPR = 14:1, RC = 1.382, WAC = 1036.9 SURGE MARGIN
PAGE 1
16:20:15 91/219 COPY 1 OF 1

AIRFOIL	FLOW COEF	LOADING PARM	ASPECT RATIO
ROTOR 1	1.012	0.5165	1.794
VANE 1		0.6236	1.606
ROTOR 2	1.086	0.6286	1.701
VANE 2		0.7066	1.512
VANE 3		0.6015	2.347
AVERAGE	1.049	0.6154	1.792

REYNOLDS NUMBER	REYN# MODIF	CL-LOSS COEFF.	CL/ SPAN	SARP	CH	TCMOD	AXMOD	CHBAR	EFFECTIVITY
5586263.	0.000	0.0000	0.0000						
3258101.	0.000			0.984	0.437	1.034	1.001	0.589	0.74105
935603.	0.000	0.0000	0.0000						
892072.	0.000			0.904	0.406	1.031	0.968	0.538	0.75383
1806613.	0.000			0.839	0.253	1.044	0.929	0.517	0.48970

LOAD COEFFICIENT	0.3846
BASE SURGE MARGIN	-9.9
CORRECTION	-2.2
SURGE MARGIN	-12.1

ROTOR 1 AT STATION 19
THERE ARE 19 AIRFOILS.
THE AIRFOIL SHAPE IS DCA
THE INCIDENCE AND DEVIATION RULES WERE
INPUT TABLES
AND NASA 2-D RULE.

STRM LINE NO.	CAMBER	SETTING	INLET METAL ANGLE	EXIT METAL ANGLE	TRUE CHORD	THICK-NESS/ CHORD	LEADING EDGE RADIUS	INCI-DENCE	DEVI-ATION	SOLID -ITY	STACK RADIUS	INFLECTION ANGLE	RAMP ANGLE
1	26.04	9.56	22.58	-3.46	10.631	0.0851	0.0452	3.12	3.49	2.581	12.449	9.35	19.95
3	25.12	12.26	24.82	-0.30	10.850	0.0824	0.0447	3.50	3.64	2.416	13.580	12.12	18.03
5	23.82	14.73	26.64	2.81	11.050	0.0800	0.0442	3.83	3.69	2.287	14.611	14.64	16.67
7	22.69	16.83	28.18	5.49	11.237	0.0777	0.0436	4.13	3.72	2.182	15.571	16.77	15.73
9	18.16	22.01	31.10	12.93	11.648	0.0726	0.0423	4.77	3.40	1.991	17.687	21.96	14.82
11	17.73	24.97	33.83	16.10	12.006	0.0682	0.0410	4.71	3.56	1.859	19.526	24.96	14.54
13	18.37	26.85	36.03	17.66	12.315	0.0644	0.0397	4.68	3.86	1.763	21.118	26.87	13.49
15	18.10	28.56	37.61	19.51	12.592	0.0610	0.0384	4.94	3.97	1.689	22.542	28.60	12.24
17	17.26	30.10	38.73	21.47	12.846	0.0579	0.0372	5.42	3.94	1.629	23.851	30.13	10.99
19	16.61	31.65	39.95	23.34	13.083	0.0550	0.0360	5.61	3.93	1.578	25.071	31.68	9.79
21	16.09	33.08	41.12	25.03	13.306	0.0523	0.0348	5.72	3.92	1.535	26.218	33.11	8.65
23	15.77	34.43	42.31	26.54	13.517	0.0497	0.0336	5.70	3.93	1.497	27.307	34.47	7.56
25	15.50	35.66	43.41	27.91	13.718	0.0472	0.0324	5.67	3.95	1.464	28.344	35.71	6.52
27	15.46	36.80	44.53	29.07	13.911	0.0448	0.0312	5.54	4.00	1.434	29.336	36.85	5.51
29	15.66	37.85	45.68	30.02	14.096	0.0426	0.0300	5.32	4.11	1.407	30.289	37.92	4.54
31	15.89	38.91	46.76	31.07	14.275	0.0404	0.0288	5.11	4.17	1.383	31.207	38.99	3.60
33	15.47	40.01	47.75	32.27	14.447	0.0382	0.0276	4.95	4.17	1.361	32.095	40.09	2.70
35	14.34	41.34	48.51	34.18	14.615	0.0362	0.0264	4.97	3.95	1.341	32.957	41.42	1.84
37	13.00	42.74	49.24	36.25	14.778	0.0342	0.0253	4.98	3.66	1.322	33.798	42.82	1.05
39	11.24	44.32	49.94	38.69	14.938	0.0322	0.0241	4.99	3.26	1.305	34.621	44.38	0.32
41	8.64	46.28	50.60	41.96	15.095	0.0303	0.0229	5.01	2.63	1.288	35.431	46.33	-0.30

STATOR 1 AT STATION 22
THERE ARE 60 AIRFOILS.
THE AIRFOIL SHAPE IS DCA
THE INCIDENCE AND DEVIATION RULES WERE
SUCTION SURFACE TANGENCY
AND NASA 2-D RULE.

STRM LINE NO.	CAMBER	SETTING	INLET METAL ANGLE	EXIT METAL ANGLE	TRUE CHORD	THICK-NESS/ CHORD	LEADING EDGE RADIUS	INCI-DENCE	DEVI-ATION	SOLID -ITY	STACK RADIUS	INFLECTION ANGLE	RAMP ANGLE
1	39.25	9.64	29.27	-9.98	2.684	0.0431	0.0058	3.45	7.00	1.682	15.235	9.64	15.02
3	39.19	9.65	29.25	-9.94	2.684	0.0434	0.0058	3.49	7.04	1.670	15.348	9.66	14.94
5	39.13	9.66	29.23	-9.90	2.685	0.0438	0.0059	3.53	7.07	1.658	15.459	9.67	14.84
7	39.07	9.68	29.21	-9.86	2.685	0.0442	0.0059	3.56	7.11	1.647	15.569	9.68	14.74
9	38.96	9.71	29.20	-9.77	2.685	0.0451	0.0061	3.65	7.20	1.620	15.828	9.73	14.48
11	38.89	9.76	29.20	-9.69	2.685	0.0459	0.0062	3.73	7.29	1.595	16.076	9.78	14.22
13	38.88	9.82	29.26	-9.62	2.686	0.0468	0.0063	3.81	7.39	1.571	16.323	9.84	13.95
15	38.88	9.88	29.32	-9.56	2.686	0.0476	0.0064	3.89	7.50	1.548	16.566	9.91	13.68
17	38.90	9.95	29.39	-9.50	2.686	0.0484	0.0065	3.97	7.60	1.526	16.805	9.97	13.42
19	38.97	10.03	29.51	-9.46	2.687	0.0492	0.0066	4.04	7.72	1.505	17.042	10.05	13.17
21	39.10	10.12	29.67	-9.43	2.687	0.0500	0.0067	4.12	7.85	1.485	17.275	10.15	12.93
23	39.31	10.24	29.89	-9.42	2.687	0.0508	0.0068	4.18	8.00	1.466	17.506	10.27	12.71
25	39.56	10.36	30.14	-9.42	2.687	0.0515	0.0069	4.25	8.16	1.447	17.734	10.40	12.49
27	39.81	10.48	30.39	-9.43	2.688	0.0523	0.0070	4.32	8.32	1.429	17.960	10.52	12.30
29	40.06	10.60	30.63	-9.43	2.688	0.0531	0.0071	4.38	8.48	1.412	18.184	10.65	12.12
31	40.32	10.72	30.88	-9.44	2.688	0.0538	0.0072	4.45	8.64	1.395	18.405	10.77	11.96
33	40.59	10.84	31.14	-9.45	2.689	0.0546	0.0073	4.51	8.80	1.379	18.625	10.89	11.83
35	40.88	10.97	31.42	-9.47	2.689	0.0553	0.0074	4.58	8.98	1.363	18.843	11.02	11.73
37	41.18	11.10	31.69	-9.49	2.689	0.0560	0.0075	4.64	9.15	1.347	19.059	11.15	11.65
39	41.47	11.23	31.96	-9.51	2.689	0.0568	0.0076	4.70	9.32	1.332	19.274	11.28	11.62
41	41.77	11.35	32.24	-9.54	2.690	0.0575	0.0077	4.76	9.50	1.318	19.488	11.40	11.62

ROTOR 2 AT STATION 24
THERE ARE 56 AIRFOILS.
THE AIRFOIL SHAPE IS DCA
THE INCIDENCE AND DEVIATION RULES WERE
SUCTION SURFACE TANGENCY
AND NASA 2-D RULE.

STRM LINE NO.	CAMBER	SETTING	INLET METAL ANGLE	EXIT METAL ANGLE	TRUE CHORD	THICK-NESS/ CHORD	LEADING EDGE RADIUS	INCI-DENCE	DEVI-ATION	SOLID -ITY	STACK RADIUS	INFLECTION ANGLE	RAMP ANGLE
1	39.52	11.12	30.88	-8.63	2.479	0.0958	0.0119	8.47	9.17	1.405	15.728	11.17	2.21
3	37.90	12.10	31.04	-6.85	2.473	0.0950	0.0117	8.44	8.89	1.393	15.828	12.14	1.88
5	36.39	13.02	31.22	-5.17	2.467	0.0942	0.0116	8.41	8.63	1.381	15.926	13.06	1.57
7	34.99	13.91	31.40	-3.59	2.462	0.0934	0.0115	8.38	8.38	1.369	16.024	13.94	1.26
9	32.03	15.88	31.90	-0.13	2.448	0.0915	0.0112	8.28	7.86	1.342	16.255	15.91	0.56
11	29.60	17.64	32.44	2.84	2.435	0.0896	0.0109	8.18	7.43	1.317	16.477	17.66	-0.08
13	27.52	19.27	33.03	5.51	2.422	0.0878	0.0106	8.06	7.07	1.293	16.699	19.28	-0.69
15	25.77	20.77	33.65	7.89	2.409	0.0860	0.0104	7.93	6.77	1.269	16.919	20.79	-1.27
17	24.30	22.17	34.32	10.01	2.396	0.0842	0.0101	7.80	6.52	1.246	17.138	22.18	-1.81
19	23.00	23.49	34.99	11.99	2.384	0.0824	0.0098	7.66	6.30	1.224	17.355	23.51	-2.33
21	21.84	24.74	35.66	13.82	2.371	0.0806	0.0096	7.51	6.10	1.203	17.570	24.77	-2.82
23	20.76	25.94	36.32	15.56	2.358	0.0789	0.0093	7.37	5.92	1.182	17.784	25.97	-3.30
25	19.85	27.08	37.00	17.15	2.346	0.0771	0.0090	7.22	5.76	1.162	17.997	27.10	-3.76
27	19.15	28.13	37.71	18.56	2.333	0.0754	0.0088	7.07	5.66	1.142	18.209	28.16	-4.20
29	18.63	29.13	38.44	19.81	2.321	0.0737	0.0085	6.91	5.60	1.123	18.420	29.15	-4.64
31	18.29	30.06	39.21	20.92	2.309	0.0719	0.0083	6.75	5.57	1.104	18.630	30.08	-5.08
33	18.11	30.95	40.00	21.89	2.296	0.0702	0.0081	6.58	5.60	1.086	18.840	30.96	-5.52
35	18.06	31.79	40.81	22.76	2.284	0.0685	0.0078	6.42	5.65	1.068	19.049	31.80	-5.98
37	18.21	32.57	41.68	23.47	2.272	0.0667	0.0076	6.24	5.77	1.051	19.258	32.58	-6.46
39	18.57	33.31	42.60	24.03	2.259	0.0650	0.0073	6.06	5.95	1.034	19.467	33.32	-6.98
41	19.15	34.01	43.59	24.44	2.247	0.0633	0.0071	5.88	6.19	1.017	19.677	34.00	-7.53

STATOR 2 AT STATION 27
THERE ARE 60 AIRFOILS.
THE AIRFOIL SHAPE IS DCA
THE INCIDENCE AND DEVIATION RULES WERE
SUCTION SURFACE TANGENCY
AND NASA 2-D RULE.

STRM LINE NO.	CAMBER	SETTING	INLET METAL ANGLE	EXIT METAL ANGLE	TRUE CHORD	THICK-NESS/ CHORD	LEADING EDGE RADIUS	INCI-DENCE	DEVI-ATION	SOLID -ITY	STACK RADIUS	INFLECTION ANGLE	RAMP ANGLE
1	38.37	11.63	30.82	-7.55	2.334	0.0415	0.0050	3.27	7.55	1.510	14.762	11.63	-30.81
3	37.40	11.33	30.03	-7.37	2.334	0.0417	0.0050	3.32	7.37	1.501	14.869	11.32	-30.77
5	36.50	11.05	29.30	-7.20	2.334	0.0420	0.0050	3.38	7.20	1.493	14.975	11.04	-30.70
7	35.68	10.79	28.63	-7.05	2.334	0.0423	0.0050	3.43	7.05	1.485	15.081	10.78	-30.63
9	33.97	10.23	27.22	-6.75	2.334	0.0430	0.0050	3.54	6.75	1.466	15.332	10.23	-30.41
11	32.61	9.78	26.09	-6.52	2.334	0.0436	0.0051	3.63	6.52	1.448	15.575	9.78	-30.16
13	31.50	9.40	25.15	-6.35	2.334	0.0443	0.0052	3.72	6.35	1.430	15.818	9.40	-29.87
15	30.60	9.08	24.38	-6.22	2.334	0.0449	0.0052	3.81	6.22	1.412	16.059	9.08	-29.56
17	29.88	8.82	23.76	-6.13	2.334	0.0456	0.0053	3.89	6.13	1.395	16.297	8.81	-29.24
19	29.26	8.58	23.21	-6.05	2.334	0.0462	0.0054	3.97	6.05	1.379	16.534	8.57	-28.91
21	28.71	8.37	22.72	-5.99	2.334	0.0468	0.0055	4.04	5.99	1.363	16.768	8.35	-28.57
23	28.19	8.16	22.26	-5.93	2.334	0.0475	0.0055	4.12	5.93	1.348	16.999	8.15	-28.22
25	27.78	7.99	21.88	-5.90	2.334	0.0481	0.0056	4.19	5.90	1.332	17.229	7.97	-27.87
27	27.50	7.85	21.60	-5.90	2.334	0.0488	0.0057	4.26	5.90	1.318	17.456	7.83	-27.51
29	27.35	7.75	21.43	-5.92	2.334	0.0494	0.0058	4.32	5.92	1.303	17.681	7.73	-27.14
31	27.31	7.69	21.34	-5.97	2.334	0.0500	0.0058	4.39	5.97	1.289	17.903	7.66	-26.77
33	27.39	7.65	21.34	-6.05	2.334	0.0507	0.0059	4.45	6.05	1.275	18.124	7.62	-26.40
35	27.54	7.63	21.40	-6.14	2.334	0.0513	0.0060	4.50	6.14	1.262	18.343	7.60	-26.02
37	27.83	7.65	21.56	-6.27	2.334	0.0519	0.0061	4.56	6.27	1.249	18.560	7.61	-25.63
39	28.27	7.70	21.84	-6.43	2.334	0.0526	0.0061	4.61	6.43	1.236	18.775	7.66	-25.24
41	28.86	7.79	22.22	-6.64	2.334	0.0532	0.0062	4.66	6.64	1.223	18.938	7.75	-24.84

STATOR 3 AT STATION 47
THERE ARE 43 AIRFOILS.
THE AIRFOIL SHAPE IS DCA

THE INCIDENCE AND DEVIATION RULES WERE
SUCTION SURFACE TANGENCY
AND NASA 2-D RULE.

STRM LINE NO.	CAMBER	SETTING	INLET METAL ANGLE	EXIT METAL ANGLE	TRUE CHORD	THICK-NESS/ CHORD	LEADING EDGE RADIUS	INCI-DENCE	DEVI-ATION	SOLID -ITY	STACK RADIUS	INFLECTION ANGLE	RAMP ANGLE
1	34.58	11.98	29.28	-5.31	6.500	0.0541	0.0176	4.62	5.31	2.122	20.962	12.12	8.70
3	34.60	11.86	29.16	-5.44	6.500	0.0552	0.0179	4.72	5.44	2.061	21.581	12.00	9.95
5	34.42	11.68	28.89	-5.53	6.500	0.0561	0.0182	4.82	5.53	2.008	22.152	11.82	10.70
7	34.18	11.50	28.59	-5.59	6.500	0.0571	0.0185	4.92	5.59	1.961	22.688	11.63	11.18
9	33.75	11.13	28.00	-5.75	6.500	0.0591	0.0192	5.12	5.75	1.864	23.864	11.25	11.72
11	33.39	10.81	27.51	-5.88	6.500	0.0609	0.0198	5.30	5.88	1.786	24.906	10.92	11.83
13	33.04	10.52	27.04	-5.99	6.500	0.0625	0.0203	5.48	5.99	1.719	25.883	10.62	11.74
15	32.77	10.28	26.67	-6.11	6.500	0.0636	0.0207	5.59	6.11	1.660	26.796	10.36	11.53
17	32.55	10.06	26.34	-6.22	6.500	0.0646	0.0210	5.69	6.22	1.608	27.657	10.13	11.26
19	32.39	9.86	26.06	-6.33	6.500	0.0656	0.0213	5.79	6.33	1.562	28.474	9.92	10.97
21	32.30	9.70	25.84	-6.45	6.500	0.0665	0.0216	5.88	6.45	1.521	29.254	9.72	10.67
23	32.24	9.55	25.67	-6.57	6.500	0.0674	0.0219	5.97	6.57	1.483	30.001	9.54	10.36
25	32.21	9.41	25.51	-6.69	6.500	0.0682	0.0222	6.05	6.69	1.448	30.720	9.38	10.06
27	32.32	9.32	25.49	-6.84	6.500	0.0691	0.0224	6.13	6.84	1.416	31.412	9.24	9.77
29	32.35	9.21	25.39	-6.96	6.500	0.0699	0.0227	6.20	6.96	1.387	32.082	9.09	9.49
31	32.30	9.09	25.24	-7.06	6.500	0.0706	0.0230	6.28	7.06	1.359	32.733	8.94	9.24
33	32.10	8.93	24.98	-7.12	6.500	0.0714	0.0232	6.36	7.12	1.333	33.369	8.75	9.03
35	31.84	8.74	24.66	-7.18	6.500	0.0721	0.0234	6.44	7.18	1.309	33.995	8.55	8.91
37	31.47	8.54	24.28	-7.20	6.500	0.0729	0.0237	6.52	7.20	1.285	34.614	8.34	8.88
39	30.94	8.30	23.77	-7.17	6.500	0.0736	0.0239	6.60	7.17	1.263	35.231	8.11	8.99
41	30.25	8.05	23.17	-7.08	6.500	0.0743	0.0242	6.69	7.08	1.241	35.853	7.85	9.30

		AIRFOILS	SINGLE AIRFOIL VOLUME	TOTAL AIRFOIL VOLUME	POLAR MOMENT OF INERTIA	AXIAL STACK REF.	CENTER RADIUS OF	-- OF -- AXIAL POS.	GRAVITY TANG. POS.	STRESS/ DENSITY	STRESS STEEL	STRESS TITANIUM
ROTOR	1	19	144.3131	2741.9495	86086.1250	-0.2406	23.4757	0.3494	0.2168	157.48	47.2	25.2
STATOR	1	60	1.0826	64.9547	331.0396	-0.0356	17.4417	8.8262	0.1273			
ROTOR	2	56	1.2568	70.3817	385.9841	-0.0439	17.4858	11.9907	0.0811	15.50	4.7	2.5
STATOR	2	60	0.6358	33.1451	180.5950	0.0201	16.8131	15.6413	0.0925			
STATOR	3	43	29.0342	1248.4709	24594.6094	-0.0497	28.7716	22.2486	0.2484			

THE TOTAL NUMBER OF ROTOR AIRFOILS 75
THE TOTAL NUMBER OF STATOR AIRFOILS 163

THE AIRFOIL VOLUME IS FOR A SOLID AIRFOIL AND NO
ATTACHMENTS ARE INCLUDED
STRESS VALUES ARE IN THOUSANDS OF LBS./ SQ. IN.

THE STRESS VALUES LISTED FOR STEEL AND TITANIUM ARE BASED
ON DENSITY VALUES OF 0.30 AND 0.16 LBS./CU. IN. RESPECTIVELY

THE VALUES OF POLAR MOMENT OF INERTIA ARE POLAR MOMENT
OF INERTIA DIVIDED BY DENSITY - LB.-IN. SQ./LB./CU. IN.

7 AUG 91 LOW NOISE FAN STUDY. BPR = 14:1, RC = 1.382, WAC = 1036.9 DATA REDUCTION PAGE 1
STATION NO 19
ROTOR NO. 1 16:20:15 91/219 COPY 1 OF 1

MASS FLOW RATE 1036.90 HUB BLOCKAGE 99.9 PERCENT HUB STATIC PRESSURE 12.90 MASS AVE TOTAL PRESSURE 20.25
CORRECTED FLOW RATE 789.86 TIP BLOCKAGE 99.3 PERCENT TIP STATIC PRESSURE 16.22 RPM 3227.5

SL NO	PER-CENT SPAN	INCI-DENCE	DEVI-ATION	INLET MACH NO.	EXIT MACH NO.	D-FACTOR	SHOCK LOSS COEF.	P R O F I L E LOSS COEF.	P R O F I L E PARA-METER	INLET FREE STRM A/ A*	MIN. PASS-AGE A/ A*	1ST CAP. MACH WAVE INCID.	LOAD COEF.	FLOW COEF.	EXIT RADIUS	DELTA DEVI-ATION	
1	0.2	3.12	3.49	0.641	0.555	0.249		0.0437	0.00846	1.144	0.986		1.307	1.874	14.241	0.00	1
3	4.7	3.50	3.64	0.657	0.538	0.294		0.0413	0.00853	1.129	1.006		1.151	1.725	15.198	0.00	3
5	9.0	3.83	3.69	0.674	0.518	0.342		0.0420	0.00912	1.115	1.026		1.042	1.608	16.109	0.00	5
7	13.1	4.13	3.72	0.690	0.495	0.394		0.0432	0.00977	1.102	1.044		0.971	1.513	16.989	0.00	7
9	22.7	4.77	3.40	0.727	0.424	0.532		0.0527	0.01269	1.076	1.088		0.869	1.345	19.039	0.00	9
11	31.3	4.71	3.56	0.762	0.483	0.483		0.0437	0.01106	1.056	1.072		0.788	1.230	20.868	0.00	11
13	38.4	4.68	3.86	0.796	0.540	0.438		0.0377	0.00994	1.040	1.060		0.727	1.145	22.372	0.00	13
15	44.5	4.94	3.97	0.827	0.573	0.423		0.0355	0.00965	1.028	1.059		0.681	1.077	23.686	0.00	15
17	50.1	5.42	3.94	0.857	0.596	0.420	0.0001	0.0346	0.00959	1.019	1.063		0.643	1.022	24.883	0.00	17
19	55.4	5.61	3.93	0.885	0.614	0.420	0.0009	0.0338	0.00952	1.012	1.066		0.611	0.974	25.995	0.00	19
21	60.3	5.72	3.92	0.912	0.631	0.421	0.0025	0.0333	0.00949	1.007	1.069		0.585	0.933	27.039	0.00	21
23	64.9	5.70	3.93	0.937	0.645	0.423	0.0045	0.0337	0.00971	1.003	1.072		0.562	0.897	28.027	0.00	23
25	69.3	5.67	3.95	0.961	0.659	0.425	0.0063	0.0354	0.01026	1.001	1.075		0.543	0.865	28.968	0.00	25
27	73.5	5.54	4.00	0.985	0.672	0.426	0.0078	0.0368	0.01076	1.000	1.078		0.526	0.835	29.866	0.00	27
29	77.6	5.32	4.11	1.007	0.684	0.429	0.0114	0.0391	0.01151	1.000	1.081	2.54	0.514	0.809	30.728	0.00	29
31	81.5	5.11	4.17	1.028	0.696	0.431	0.0135	0.0411	0.01215	1.001	1.084	2.48	0.500	0.784	31.557	0.00	31
33	85.2	4.95	4.17	1.049	0.708	0.431	0.0149	0.0439	0.01296	1.002	1.087	2.45	0.485	0.761	32.358	0.00	33
35	88.9	4.97	3.95	1.070	0.719	0.429	0.0158	0.0481	0.01411	1.004	1.089	2.55	0.465	0.740	33.138	0.00	35
37	92.5	4.98	3.66	1.089	0.731	0.427	0.0171	0.0512	0.01485	1.006	1.089	2.79	0.445	0.720	33.901	0.00	37
39	96.0	4.99	3.26	1.108	0.742	0.423	0.0180	0.0543	0.01548	1.009	1.088	2.82	0.422	0.702	34.653	0.00	39
41	99.5	5.01	2.63	1.127	0.753	0.418	0.0180	0.0595	0.01644	1.013	1.083	2.81	0.395	0.685	35.402	0.00	41

STATOR NO. 1 AT STATION NO. 22

MASS FLOW RATE 129.60 HUB BLOCKAGE 98.6 PERCENT HUB STATIC PRESSURE 14.35 MASS AVE TOTAL PRESSURE 17.56
CORRECTED FLOW RATE 111.65 TIP BLOCKAGE 99.6 PERCENT TIP STATIC PRESSURE 15.74

SL NO	PER-CENT SPAN	INCI-DENCE	DEVI-ATION	INLET MACH NO.	EXIT MACH NO.	D-FACTOR	SHOCK LOSS COEF.	P R O F I L E LOSS COEF.	P R O F I L E PARA-METER	INLET FREE STRM A/ A*	MIN. PASS-AGE A/ A*	1ST CAP. MACH WAVE INCID.	EXIT RADIUS	DELTA DEVI-ATION	
1	1.6	3.45	7.00	0.644	0.491	0.394		0.0999	0.02966	1.141	1.192		15.578	0.01	1
3	4.2	3.49	7.04	0.643	0.492	0.392		0.0925	0.02766	1.142	1.194		15.688	0.01	3
5	6.7	3.53	7.07	0.641	0.493	0.391		0.0857	0.02582	1.144	1.196		15.796	0.01	5
7	9.3	3.56	7.11	0.640	0.493	0.389		0.0795	0.02412	1.145	1.197		15.904	0.01	7
9	15.2	3.65	7.20	0.636	0.494	0.387		0.0667	0.02057	1.149	1.201		16.157	0.01	9
11	20.9	3.73	7.29	0.632	0.493	0.387		0.0567	0.01776	1.153	1.206		16.398	0.01	11
13	26.5	3.81	7.39	0.628	0.491	0.388		0.0488	0.01552	1.157	1.211		16.638	0.01	13
15	32.1	3.89	7.50	0.624	0.488	0.390		0.0428	0.01383	1.161	1.217		16.875	0.01	15
17	37.6	3.97	7.60	0.620	0.485	0.393		0.0386	0.01265	1.166	1.223		17.108	0.01	17
19	43.0	4.04	7.72	0.616	0.481	0.397		0.0360	0.01197	1.170	1.229		17.338	0.01	19
21	48.4	4.12	7.85	0.613	0.478	0.401		0.0351	0.01180	1.173	1.235		17.566	0.02	21
23	53.7	4.18	8.00	0.610	0.475	0.406		0.0355	0.01211	1.176	1.241		17.791	0.02	23
25	58.9	4.25	8.16	0.608	0.471	0.412		0.0373	0.01289	1.179	1.247		18.014	0.02	25
27	64.1	4.32	8.32	0.605	0.467	0.418		0.0404	0.01414	1.182	1.253		18.235	0.02	27
29	69.3	4.38	8.48	0.603	0.463	0.426		0.0448	0.01587	1.185	1.257		18.454	0.02	29
31	74.4	4.45	8.64	0.601	0.459	0.433		0.0504	0.01808	1.187	1.263		18.672	0.02	31
33	79.5	4.51	8.80	0.599	0.455	0.442		0.0573	0.02079	1.189	1.269		18.888	0.02	33
35	84.6	4.58	8.98	0.597	0.450	0.451		0.0656	0.02406	1.191	1.275		19.104	0.02	35
37	89.6	4.64	9.15	0.596	0.445	0.460		0.0755	0.02802	1.193	1.280		19.318	0.02	37
39	94.6	4.70	9.32	0.594	0.440	0.471		0.0870	0.03266	1.195	1.286		19.532	0.03	39
41	99.7	4.76	9.50	0.593	0.434	0.483		0.1003	0.03805	1.197	1.293		19.746	0.03	41

7 AUG 91 LOW NOISE FAN STUDY. BPR = 14:1, RC = 1.382, WAC = 1036.9 DATA REDUCTION
STATION NO 24 PAGE 2
ROTOR NO. 2 16:20:15 91/219 COPY 1 OF 1

MASS FLOW RATE 129.60 HUB BLOCKAGE 99.1 PERCENT HUB STATIC PRESSURE 15.36 MASS AVE TOTAL PRESSURE 20.50
CORRECTED FLOW RATE 97.87 TIP BLOCKAGE 99.4 PERCENT TIP STATIC PRESSURE 17.51 RPM 3227.5

SL NO	PERCENT SPAN	INCIDENCE	DEVIATION	INLET MACH NO.	EXIT MACH NO.	D-FACTOR	SHOCK LOSS COEF.	PROFILE LOSS COEF.	PROFILE PARAMETER	INLET FREE STRM A/A*	MIN. PASSAGE A/A*	1ST CAP. MACH WAVE INCID.	LOAD COEF.	FLOW COEF.	EXIT RADIUS	DELTA DEVIATION	
1	1.0	8.47	9.17	0.664	0.551	0.385		0.0307	0.01094	1.123	1.151		1.056	1.290	15.770	0.01	1
3	3.4	8.44	8.89	0.666	0.549	0.384		0.0300	0.01077	1.121	1.152		1.017	1.283	15.863	0.01	3
5	5.8	8.41	8.63	0.667	0.547	0.383		0.0294	0.01061	1.121	1.154		0.981	1.275	15.955	0.01	5
7	8.2	8.38	8.38	0.668	0.545	0.382		0.0288	0.01047	1.120	1.155		0.947	1.266	16.047	0.01	7
9	13.8	8.28	7.86	0.669	0.541	0.380		0.0276	0.01017	1.119	1.160		0.875	1.244	16.265	0.01	9
11	19.3	8.18	7.43	0.669	0.537	0.378		0.0266	0.00993	1.118	1.165		0.815	1.221	16.475	0.01	11
13	24.7	8.06	7.07	0.669	0.533	0.377		0.0258	0.00974	1.118	1.172		0.764	1.197	16.687	0.01	13
15	30.2	7.93	6.77	0.669	0.529	0.377		0.0252	0.00959	1.119	1.177		0.720	1.172	16.898	0.01	15
17	35.6	7.80	6.52	0.668	0.526	0.377		0.0246	0.00948	1.120	1.185		0.682	1.147	17.107	0.01	17
19	41.0	7.66	6.30	0.666	0.523	0.377		0.0243	0.00941	1.121	1.192		0.648	1.122	17.316	0.01	19
21	46.4	7.51	6.10	0.665	0.520	0.376		0.0239	0.00935	1.122	1.199		0.617	1.097	17.525	0.01	21
23	51.7	7.37	5.92	0.664	0.518	0.375		0.0237	0.00935	1.123	1.204		0.589	1.074	17.732	0.01	23
25	57.1	7.22	5.76	0.663	0.517	0.374		0.0239	0.00946	1.124	1.210		0.565	1.051	17.939	0.01	25
27	62.4	7.07	5.66	0.662	0.515	0.374		0.0244	0.00973	1.125	1.217		0.543	1.028	18.145	0.01	27
29	67.7	6.91	5.60	0.661	0.513	0.374		0.0252	0.01015	1.126	1.224		0.525	1.004	18.351	0.01	29
31	73.0	6.75	5.57	0.659	0.511	0.375		0.0265	0.01073	1.128	1.232		0.510	0.980	18.556	0.01	31
33	78.3	6.58	5.60	0.657	0.509	0.377		0.0281	0.01148	1.129	1.241		0.497	0.956	18.761	0.01	33
35	83.6	6.42	5.65	0.655	0.507	0.379		0.0301	0.01239	1.131	1.249		0.485	0.932	18.966	0.01	35
37	88.9	6.24	5.77	0.653	0.504	0.382		0.0325	0.01349	1.133	1.259		0.477	0.908	19.170	0.01	37
39	94.2	6.06	5.95	0.650	0.501	0.386		0.0353	0.01479	1.136	1.269		0.470	0.882	19.375	0.01	39
41	99.5	5.88	6.19	0.647	0.498	0.392		0.0386	0.01632	1.139	1.281		0.466	0.855	19.579	0.01	41

STATOR NO. 2 AT STATION NO. 27

MASS FLOW RATE 129.60 HUB BLOCKAGE 98.9 PERCENT HUB STATIC PRESSURE 16.18 MASS AVE TOTAL PRESSURE 20.32
CORRECTED FLOW RATE 98.76 TIP BLOCKAGE 98.8 PERCENT TIP STATIC PRESSURE 17.88

SL NO	PERCENT SPAN	INCIDENCE	DEVIATION	INLET MACH NO.	EXIT MACH NO.	D-FACTOR	SHOCK LOSS COEF.	PROFILE LOSS COEF.	PROFILE PARAMETER	INLET FREE STRM A/A*	MIN. PASSAGE A/A*	1ST CAP. MACH WAVE INCID.	EXIT RADIUS	DELTA DEVIATION	
1	1.3	3.27	7.55	0.708	0.579	0.363		0.0839	0.02779	1.089	1.131		14.047	0.01	1
3	3.6	3.32	7.37	0.699	0.572	0.362		0.0783	0.02608	1.095	1.138		14.133	0.01	3
5	5.9	3.38	7.20	0.691	0.565	0.360		0.0730	0.02445	1.101	1.144		14.220	0.01	5
7	8.2	3.43	7.05	0.683	0.559	0.358		0.0680	0.02289	1.107	1.151		14.306	0.01	7
9	13.7	3.54	6.75	0.666	0.545	0.353		0.0572	0.01953	1.121	1.168		14.512	0.01	9
11	19.0	3.63	6.52	0.650	0.533	0.348		0.0484	0.01671	1.136	1.183		14.713	0.01	11
13	24.4	3.72	6.35	0.635	0.523	0.344		0.0410	0.01433	1.150	1.200		14.916	0.01	13
15	29.8	3.81	6.22	0.622	0.513	0.340		0.0350	0.01241	1.163	1.217		15.119	0.01	15
17	35.2	3.89	6.13	0.610	0.505	0.336		0.0306	0.01095	1.177	1.234		15.322	0.01	17
19	40.6	3.97	6.05	0.599	0.497	0.333		0.0274	0.00994	1.190	1.250		15.524	0.01	19
21	46.0	4.04	5.99	0.588	0.490	0.331		0.0255	0.00936	1.202	1.266		15.725	0.01	21
23	51.4	4.12	5.93	0.579	0.483	0.329		0.0248	0.00921	1.214	1.281		15.926	0.01	23
25	56.7	4.19	5.90	0.570	0.476	0.328		0.0253	0.00949	1.226	1.296		16.126	0.01	25
27	62.0	4.26	5.90	0.562	0.470	0.328		0.0269	0.01020	1.237	1.310		16.325	0.01	27
29	67.3	4.32	5.92	0.555	0.464	0.328		0.0296	0.01135	1.248	1.325		16.524	0.01	29
31	72.6	4.39	5.97	0.548	0.458	0.331		0.0334	0.01294	1.258	1.338		16.723	0.01	31
33	77.9	4.45	6.05	0.542	0.453	0.334		0.0382	0.01497	1.267	1.352		16.921	0.01	33
35	83.2	4.50	6.14	0.536	0.447	0.338		0.0440	0.01745	1.276	1.365		17.118	0.01	35
37	88.4	4.56	6.27	0.531	0.442	0.343		0.0510	0.02041	1.284	1.380		17.316	0.01	37
39	93.7	4.61	6.43	0.527	0.436	0.350		0.0590	0.02387	1.292	1.392		17.513	0.01	39
41	98.9	4.66	6.64	0.523	0.431	0.359		0.0682	0.02787	1.299	1.404		17.709	0.01	41

7 AUG 91 LOW NOISE FAN STUDY. BPR = 14:1, RC = 1.382, WAC = 1036.9 DATA REDUCTION
STATION NO 47 PAGE 3
STATOR NO. 3 16:20:15 91/219 COPY 1 OF 1

MASS FLOW RATE 907.30 HUB BLOCKAGE 98.2 PERCENT HUB STATIC PRESSURE 16.23 MASS AVE TOTAL PRESSURE 20.29
CORRECTED FLOW RATE 691.65 TIP BLOCKAGE 98.3 PERCENT TIP STATIC PRESSURE 17.50

SL NO	PER-CENT SPAN	INCI-DENCE	DEVI-ATION	INLET MACH NO.	EXIT MACH NO.	D-FACTOR	SHOCK LOSS COEF.	P R O F I L E LOSS COEF.	PARA-METER	INLET FREE STRM A/ A*	MIN. PASS-AGE A/ A*	1ST CAP. MACH WAVE INCID.	EXIT RADIUS	DELTA DEVI-ATION	
1	2.4	4.62	5.31	0.599	0.339	0.549		0.1830	0.04311	1.189	1.254		21.375	0.02	1
3	6.8	4.72	5.44	0.609	0.375	0.504		0.1422	0.03449	1.178	1.233		22.055	0.02	3
5	10.7	4.82	5.53	0.618	0.399	0.475		0.1164	0.02899	1.168	1.217		22.662	0.02	5
7	14.3	4.92	5.59	0.626	0.419	0.455		0.0982	0.02505	1.159	1.205		23.222	0.02	7
9	22.1	5.12	5.75	0.643	0.453	0.425		0.0714	0.01917	1.142	1.184		24.425	0.02	9
11	28.8	5.30	5.88	0.656	0.476	0.408		0.0559	0.01565	1.130	1.166		25.472	0.02	11
13	35.1	5.48	5.99	0.668	0.495	0.398		0.0459	0.01337	1.119	1.153		26.444	0.01	13
15	40.9	5.59	6.11	0.679	0.510	0.391		0.0400	0.01204	1.111	1.142		27.347	0.01	15
17	46.4	5.69	6.22	0.688	0.523	0.387		0.0366	0.01136	1.104	1.133		28.195	0.01	17
19	51.6	5.79	6.33	0.696	0.534	0.385		0.0350	0.01121	1.097	1.125		28.998	0.01	19
21	56.5	5.88	6.45	0.704	0.543	0.384		0.0349	0.01149	1.092	1.120		29.763	0.01	21
23	61.2	5.97	6.57	0.711	0.551	0.385		0.0360	0.01215	1.087	1.115		30.495	0.01	23
25	65.8	6.05	6.69	0.718	0.558	0.386		0.0380	0.01313	1.082	1.110		31.199	0.00	25
27	70.2	6.13	6.84	0.724	0.564	0.388		0.0408	0.01442	1.078	1.107		31.878	-0.01	27
29	74.4	6.20	6.96	0.730	0.569	0.392		0.0443	0.01599	1.074	1.105		32.534	-0.01	29
31	78.5	6.28	7.06	0.733	0.571	0.396		0.0485	0.01784	1.072	1.104		33.173	-0.02	31
33	82.5	6.36	7.12	0.733	0.567	0.403		0.0537	0.02013	1.072	1.106		33.798	-0.02	33
35	86.5	6.44	7.18	0.730	0.560	0.412		0.0598	0.02285	1.074	1.110		34.418	-0.01	35
37	90.5	6.52	7.20	0.725	0.549	0.424		0.0669	0.02603	1.078	1.116		35.036	-0.01	37
39	94.5	6.60	7.17	0.715	0.531	0.440		0.0755	0.02989	1.084	1.127		35.658	-0.01	39
41	98.6	6.69	7.08	0.701	0.504	0.463		0.0872	0.03516	1.093	1.143		36.295	-0.02	41

EQUIVALENT VANE EXIT SYSTEM

SL NO.	D-FACTOR	SOLIDITY
1	0.5787	3.632
3	0.5217	3.563
5	0.4786	3.501
7	0.4428	3.445
9	0.3746	3.330
11	0.3206	3.234
13	0.2733	3.148
15	0.2318	3.072
17	0.1945	3.004
19	0.1604	2.941
21	0.1291	2.884
23	0.1001	2.830
25	0.0727	2.780
27	0.0475	2.734
29	0.0259	2.690
31	0.0104	2.648
33	0.0058	2.608
35	0.0098	2.570
37	0.0212	2.534
39	0.0469	2.499
41	0.0909	2.464

7 AUG 91 LOW NOISE FAN STUDY. BPR = 14:1, RC = 1.382, WAC = 1036.9

AIRFOIL	MASS AVERAGED D-FACTOR	STAGE REACTION	MEANLINE SOLIDITY	MASS AVERAGED A/A* FREE STREAM	MASS AVERAGED A/A* MIN PASSAGE
ROTOR 1	0.4263		1.535	1.026	1.071
STATOR 1	0.4156	0.8528	1.485	1.173	1.240
ROTOR 2	0.3783		1.203	1.124	1.206
STATOR 2	0.3398		1.363		
STATOR 3	0.4098	0.6335	1.521		
EQUIV. VANE EXIT	0.1600		2.884		
AVERAGE	0.3451		1.777		

STAGE	LOAD COEFFICIENT	FLOW COEFFICIENT	STAGE ADIABATIC EFFICIENCY VANE TO VANE	STAGE PRESSURE RATIO VANE TO VANE	STAGE TEMPERATURE RISE VANE TO VANE
1	0.413	1.014	94.12	1.210	30.87
2	0.550	1.074	87.58	1.153	26.03

S.L. NO.	STAGE 1 PRESSURE RATIO V - V	STAGE 1 TEMPERATURE RISE V - V	STAGE 1 ADIABATIC EFFICIENCY V - V	STAGE 2 PRESSURE RATIO V - V	STAGE 2 TEMPERATURE RISE V - V	STAGE 2 ADIABATIC EFFICIENCY V - V
1	1.180	26.78	94.07	1.200	34.49	84.42
3	1.182	26.94	94.13	1.196	33.63	85.09
5	1.183	27.10	94.19	1.192	32.84	85.69
7	1.184	27.26	94.24	1.189	32.10	86.26
9	1.187	27.64	94.32	1.182	30.52	87.53
11	1.190	28.02	94.39	1.176	29.23	88.56
13	1.193	28.41	94.38	1.170	28.13	89.41
15	1.196	28.81	94.35	1.166	27.21	90.08
17	1.198	29.19	94.33	1.161	26.44	90.55
19	1.201	29.62	94.31	1.157	25.76	90.81
21	1.205	30.09	94.31	1.154	25.17	90.87
23	1.209	30.63	94.28	1.150	24.61	90.68
25	1.213	31.19	94.23	1.146	24.15	90.25
27	1.217	31.75	94.15	1.142	23.80	89.59
29	1.220	32.32	94.06	1.139	23.54	88.68
31	1.224	32.89	93.97	1.136	23.37	87.58
33	1.228	33.47	93.87	1.133	23.29	86.24
35	1.233	34.08	93.74	1.130	23.27	84.68
37	1.237	34.70	93.60	1.128	23.36	82.86
39	1.241	35.32	93.47	1.125	23.54	80.83
41	1.245	35.93	93.35	1.123	23.83	78.60

7 AUG 91 LOW NOISE FAN STUDY. BPR = 14:1, RC = 1.382, WAC = 1036.9

ROTOR 1 AT STATION 19
THERE ARE 19 AIRFOILS

S.L. NO.	RADII INLET	RADII EXIT	RADII AVERAGE	RADII STACK	CHORD	THICK -NESS	T/C	LER	TER	MAX. T/C LOCATION	INFLECTION LOCATION	FRONT CAMBER	REAR CAMBER
1	10.665	14.241	12.453	12.449	10.631	0.9048	0.085	0.0452	0.0452	0.500	0.500	13.24	12.81
3	11.967	15.198	13.583	13.580	10.850	0.8942	0.082	0.0447	0.0447	0.500	0.500	12.70	12.42
5	13.115	16.109	14.612	14.611	11.050	0.8836	0.080	0.0442	0.0442	0.500	0.500	12.00	11.83
7	14.155	16.989	15.572	15.571	11.237	0.8728	0.078	0.0436	0.0436	0.500	0.500	11.41	11.28
9	16.339	19.039	17.689	17.687	11.648	0.8459	0.073	0.0423	0.0423	0.500	0.500	9.14	9.03
11	18.190	20.868	19.529	19.526	12.006	0.8191	0.068	0.0410	0.0410	0.500	0.500	8.87	8.86
13	19.870	22.372	21.121	21.118	12.315	0.7934	0.064	0.0397	0.0397	0.500	0.500	9.16	9.21
15	21.403	23.686	22.545	22.542	12.592	0.7685	0.061	0.0384	0.0384	0.500	0.500	9.01	9.08
17	22.822	24.883	23.853	23.851	12.846	0.7439	0.058	0.0372	0.0372	0.500	0.500	8.60	8.66
19	24.149	25.995	25.072	25.071	13.083	0.7196	0.055	0.0360	0.0360	0.500	0.500	8.28	8.34
21	25.400	27.039	26.220	26.218	13.306	0.6954	0.052	0.0348	0.0348	0.500	0.500	8.01	8.08
23	26.588	28.027	27.307	27.307	13.517	0.6714	0.050	0.0336	0.0336	0.500	0.500	7.84	7.92
25	27.721	28.968	28.344	28.344	13.718	0.6474	0.047	0.0324	0.0324	0.500	0.500	7.70	7.80
27	28.806	29.866	29.336	29.336	13.911	0.6236	0.045	0.0312	0.0312	0.500	0.500	7.69	7.78
29	29.850	30.728	30.289	30.289	14.096	0.5998	0.043	0.0300	0.0300	0.500	0.508	7.76	7.90
31	30.858	31.557	31.207	31.207	14.275	0.5762	0.040	0.0288	0.0288	0.500	0.527	7.77	7.92
33	31.832	32.358	32.095	32.095	14.447	0.5525	0.038	0.0276	0.0276	0.500	0.544	7.65	7.82
35	32.777	33.138	32.957	32.957	14.615	0.5289	0.036	0.0264	0.0264	0.500	0.559	7.09	7.25
37	33.695	33.901	33.798	33.798	14.778	0.5051	0.034	0.0253	0.0253	0.500	0.573	6.43	6.57
39	34.589	34.653	34.621	34.621	14.938	0.4813	0.032	0.0241	0.0241	0.500	0.587	5.56	5.68
41	35.460	35.402	35.431	35.431	15.095	0.4572	0.030	0.0229	0.0229	0.500	0.600	4.27	4.37

S.L. NO.	PRESSURE SURFACE LENGTH	MEANLINE LENGTH	SUCTION SURFACE LENGTH	SECTION AREA	CONICAL CG LOCATION X	CONICAL CG LOCATION Y	STACK X	TABLE Y	WEDGE1 ANGLE F-CURV	WEDGE2 ANGLE R-CURV	SUCTION SURFACE INCIDENCE	PRESSURE SURFACE DEVIATION	SECTION TYPE
1	10.651	10.702	10.904	6.725	-0.068	0.274	0.5000	0.5000	0.04310	0.04170	-4.77	-5.60	DCA
3	10.870	10.915	11.108	6.780	-0.086	0.330	0.5000	0.5000	0.04053	0.03966	-4.17	-5.17	DCA
5	11.070	11.108	11.290	6.819	-0.098	0.352	0.5000	0.5000	0.03763	0.03710	-3.64	-4.85	DCA
7	11.256	11.289	11.461	6.846	-0.107	0.351	0.5000	0.5000	0.03521	0.03482	-3.15	-4.57	DCA
9	11.668	11.677	11.817	6.866	-0.107	0.264	0.5000	0.5000	0.02726	0.02694	-2.13	-4.30	DCA
11	12.025	12.034	12.164	6.854	-0.120	0.257	0.5000	0.5000	0.02569	0.02567	-1.77	-3.68	DCA
13	12.334	12.348	12.476	6.815	-0.139	0.275	0.5000	0.5000	0.02586	0.02599	-1.41	-3.01	DCA
15	12.610	12.625	12.748	6.751	-0.151	0.277	0.5000	0.5000	0.02488	0.02508	-0.82	-2.55	DCA
17	12.864	12.877	12.993	6.667	-0.156	0.268	0.5000	0.5000	0.02327	0.02345	-0.05	-2.23	DCA
19	13.101	13.113	13.222	6.568	-0.162	0.262	0.5000	0.5000	0.02200	0.02216	0.43	-1.94	DCA
21	13.323	13.336	13.439	6.457	-0.168	0.258	0.5000	0.5000	0.02095	0.02112	0.80	-1.66	DCA
23	13.535	13.547	13.646	6.334	-0.177	0.257	0.5000	0.5000	0.02019	0.02039	1.03	-1.37	DCA
25	13.736	13.749	13.844	6.200	-0.185	0.257	0.5000	0.5000	0.01953	0.01978	1.24	-1.09	DCA
27	13.929	13.944	14.035	6.058	-0.196	0.261	0.5000	0.5000	0.01923	0.01946	1.35	-0.79	DCA
29	14.116	14.132	14.220	5.907	-0.211	0.270	0.5000	0.5000	0.01885	0.01982	1.37	-0.46	DCA
31	14.295	14.312	14.398	5.747	-0.223	0.275	0.5000	0.5000	0.01799	0.02038	1.38	-0.17	DCA
33	14.468	14.486	14.567	5.579	-0.232	0.275	0.5000	0.5000	0.01695	0.02062	1.43	0.05	DCA
35	14.634	14.649	14.723	5.401	-0.226	0.256	0.5000	0.5000	0.01512	0.01954	1.63	0.06	DCA
37	14.796	14.807	14.874	5.215	-0.216	0.233	0.5000	0.5000	0.01322	0.01810	1.82	0.00	DCA
39	14.954	14.960	15.019	5.021	-0.198	0.202	0.5000	0.5000	0.01106	0.01602	1.99	-0.17	DCA
41	15.109	15.109	15.157	4.818	-0.162	0.154	0.5000	0.5000	0.00823	0.01260	2.15	-0.55	DCA

STATOR 1 AT STATION 22
THERE ARE 60 AIRFOILS

S.L. NO.	RADII INLET	RADII EXIT	RADII AVERAGE	RADII STACK	CHORD	THICK -NESS	T/C	LER	TER	MAX. T/C LOCATION	INFLECTION LOCATION	FRONT CAMBER	REAR CAMBER
1	14.893	15.578	15.235	15.235	2.684	0.1156	0.043	0.0058	0.0058	0.500	0.500	19.63	19.63
3	15.008	15.688	15.348	15.348	2.684	0.1166	0.043	0.0058	0.0058	0.500	0.500	19.59	19.60
5	15.121	15.796	15.459	15.459	2.685	0.1176	0.044	0.0059	0.0059	0.500	0.500	19.56	19.57
7	15.234	15.904	15.569	15.569	2.685	0.1187	0.044	0.0059	0.0059	0.500	0.500	19.53	19.54
9	15.499	16.157	15.828	15.828	2.685	0.1210	0.045	0.0061	0.0061	0.500	0.500	19.47	19.50
11	15.754	16.398	16.076	16.076	2.685	0.1233	0.046	0.0062	0.0062	0.500	0.500	19.42	19.47
13	16.007	16.638	16.323	16.323	2.686	0.1256	0.047	0.0063	0.0063	0.500	0.500	19.41	19.47
15	16.257	16.875	16.566	16.566	2.686	0.1278	0.048	0.0064	0.0064	0.500	0.500	19.42	19.47
17	16.503	17.108	16.805	16.805	2.686	0.1300	0.048	0.0065	0.0065	0.500	0.500	19.42	19.48
19	16.746	17.338	17.042	17.042	2.687	0.1322	0.049	0.0066	0.0066	0.500	0.500	19.46	19.51
21	16.985	17.566	17.276	17.275	2.687	0.1343	0.050	0.0067	0.0067	0.500	0.500	19.51	19.58
23	17.221	17.791	17.506	17.506	2.687	0.1364	0.051	0.0068	0.0068	0.500	0.500	19.62	19.70
25	17.455	18.014	17.735	17.734	2.687	0.1385	0.052	0.0069	0.0069	0.500	0.500	19.74	19.82
27	17.685	18.235	17.960	17.960	2.688	0.1406	0.052	0.0070	0.0070	0.500	0.500	19.86	19.95
29	17.913	18.454	18.184	18.184	2.688	0.1427	0.053	0.0071	0.0071	0.500	0.500	19.99	20.08
31	18.138	18.672	18.405	18.405	2.688	0.1447	0.054	0.0072	0.0072	0.500	0.500	20.11	20.20
33	18.361	18.888	18.625	18.625	2.689	0.1467	0.055	0.0073	0.0073	0.500	0.500	20.25	20.34
35	18.582	19.104	18.843	18.843	2.689	0.1487	0.055	0.0074	0.0074	0.500	0.500	20.39	20.49
37	18.800	19.318	19.059	19.059	2.689	0.1507	0.056	0.0075	0.0075	0.500	0.500	20.54	20.64
39	19.016	19.532	19.274	19.274	2.689	0.1527	0.057	0.0076	0.0076	0.500	0.500	20.69	20.79
41	19.230	19.746	19.488	19.488	2.690	0.1546	0.057	0.0077	0.0077	0.500	0.500	20.83	20.94

S.L. NO.	PRESSURE SURFACE LENGTH	MEANLINE LENGTH	SUCTION SURFACE LENGTH	SECTION AREA	CONICAL CG LOCATION X	CONICAL CG LOCATION Y	STACK X	TABLE Y	WEDGE1 ANGLE F-CURV	WEDGE2 ANGLE R-CURV	SUCTION SURFACE INCIDENCE	PRESSURE SURFACE DEVIATION	SECTION TYPE
1	2.716	2.736	2.770	0.220	-0.030	0.126	0.5000	0.5000	0.25026	0.25027	-0.04	2.03	DCA
3	2.716	2.736	2.770	0.222	-0.030	0.126	0.5000	0.5000	0.24932	0.24988	-0.04	2.03	DCA
5	2.715	2.736	2.771	0.224	-0.030	0.126	0.5000	0.5000	0.24940	0.24951	-0.04	2.02	DCA
7	2.715	2.736	2.771	0.226	-0.030	0.125	0.5000	0.5000	0.24901	0.24916	-0.04	2.02	DCA
9	2.715	2.736	2.772	0.231	-0.030	0.125	0.5000	0.5000	0.24825	0.24859	-0.04	2.03	DCA
11	2.715	2.736	2.773	0.235	-0.030	0.125	0.5000	0.5000	0.24765	0.24824	-0.04	2.03	DCA
13	2.715	2.737	2.774	0.239	-0.030	0.125	0.5000	0.5000	0.24751	0.24816	-0.04	2.05	DCA
15	2.715	2.737	2.775	0.244	-0.030	0.125	0.5000	0.5000	0.24750	0.24817	-0.04	2.08	DCA
17	2.715	2.737	2.776	0.248	-0.031	0.125	0.5000	0.5000	0.24755	0.24823	-0.04	2.10	DCA
19	2.715	2.738	2.777	0.252	-0.031	0.125	0.5000	0.5000	0.24793	0.24867	-0.05	2.14	DCA
21	2.715	2.738	2.779	0.256	-0.031	0.126	0.5000	0.5000	0.24863	0.24948	-0.05	2.19	DCA
23	2.716	2.739	2.780	0.260	-0.032	0.126	0.5000	0.5000	0.24986	0.25083	-0.05	2.26	DCA
25	2.716	2.740	2.782	0.264	-0.033	0.127	0.5000	0.5000	0.25129	0.25236	-0.05	2.33	DCA
27	2.717	2.741	2.784	0.268	-0.033	0.128	0.5000	0.5000	0.25279	0.25388	-0.05	2.41	DCA
29	2.717	2.742	2.786	0.272	-0.034	0.129	0.5000	0.5000	0.25428	0.25539	-0.05	2.49	DCA
31	2.718	2.743	2.788	0.276	-0.034	0.130	0.5000	0.5000	0.25580	0.25693	-0.05	2.57	DCA
33	2.718	2.744	2.790	0.280	-0.035	0.131	0.5000	0.5000	0.25740	0.25854	-0.05	2.66	DCA
35	2.719	2.746	2.792	0.284	-0.036	0.132	0.5000	0.5000	0.25916	0.26035	-0.06	2.75	DCA
37	2.719	2.747	2.794	0.288	-0.036	0.133	0.5000	0.5000	0.26090	0.26214	-0.06	2.85	DCA
39	2.720	2.748	2.796	0.292	-0.037	0.134	0.5000	0.5000	0.26264	0.26393	-0.06	2.94	DCA
41	2.721	2.749	2.798	0.296	-0.038	0.135	0.5000	0.5000	0.26441	0.26575	-0.06	3.04	DCA

ROTOR 2 AT STATION 24
THERE ARE 56 AIRFOILS

S.L. NO.	RADII INLET	RADII EXIT	RADII AVERAGE	RADII STACK	CHORD	THICK -NESS	T/C	LER	TER	MAX. T/C LOCATION	INFLECTION LOCATION	FRONT CAMBER	REAR CAMBER
1	15.687	15.770	15.728	15.728	2.479	0.2374	0.096	0.0119	0.0119	0.500	0.500	19.71	19.81
3	15.792	15.863	15.828	15.828	2.473	0.2349	0.095	0.0117	0.0117	0.500	0.500	18.91	18.99
5	15.897	15.955	15.926	15.926	2.467	0.2323	0.094	0.0116	0.0116	0.500	0.500	18.16	18.23
7	16.001	16.047	16.024	16.024	2.462	0.2298	0.093	0.0115	0.0115	0.500	0.500	17.46	17.53
9	16.245	16.265	16.255	16.255	2.448	0.2239	0.091	0.0112	0.0112	0.500	0.500	15.99	16.04
11	16.478	16.475	16.477	16.477	2.435	0.2183	0.090	0.0109	0.0109	0.500	0.500	14.78	14.82
13	16.712	16.687	16.699	16.699	2.422	0.2127	0.088	0.0106	0.0106	0.500	0.500	13.74	13.78
15	16.942	16.898	16.920	16.919	2.409	0.2072	0.086	0.0104	0.0104	0.500	0.500	12.87	12.90
17	17.169	17.107	17.138	17.138	2.396	0.2018	0.084	0.0101	0.0101	0.500	0.500	12.13	12.17
19	17.395	17.316	17.356	17.355	2.384	0.1965	0.082	0.0098	0.0098	0.500	0.500	11.48	11.52
21	17.618	17.525	17.572	17.570	2.371	0.1912	0.081	0.0096	0.0096	0.500	0.500	10.90	10.95
23	17.840	17.732	17.786	17.784	2.358	0.1860	0.079	0.0093	0.0093	0.500	0.501	10.35	10.40
25	18.060	17.939	18.000	17.997	2.346	0.1809	0.077	0.0090	0.0090	0.500	0.518	9.90	9.95
27	18.278	18.145	18.212	18.209	2.333	0.1759	0.075	0.0088	0.0088	0.500	0.536	9.55	9.60
29	18.495	18.351	18.423	18.420	2.321	0.1710	0.074	0.0085	0.0085	0.500	0.554	9.29	9.34
31	18.712	18.556	18.634	18.630	2.309	0.1660	0.072	0.0083	0.0083	0.500	0.572	9.12	9.16
33	18.928	18.761	18.845	18.840	2.296	0.1612	0.070	0.0081	0.0081	0.500	0.592	9.04	9.07
35	19.143	18.966	19.055	19.049	2.284	0.1564	0.068	0.0078	0.0078	0.500	0.612	9.01	9.04
37	19.359	19.170	19.265	19.258	2.272	0.1516	0.067	0.0076	0.0076	0.500	0.633	9.10	9.11
39	19.575	19.375	19.475	19.467	2.259	0.1469	0.065	0.0073	0.0073	0.500	0.655	9.28	9.29
41	19.791	19.579	19.685	19.677	2.247	0.1422	0.063	0.0071	0.0071	0.500	0.678	9.58	9.57

S.L. NO.	PRESSURE SURFACE LENGTH	MEANLINE LENGTH	SUCTION SURFACE LENGTH	SECTION AREA	CONICAL CG LOCATION X	CONICAL CG LOCATION Y	STACK X	STACK Y	TABLE WEDGE1 ANGLE F-CURV	TABLE WEDGE2 ANGLE R-CURV	SUCTION SURFACE INCIDENCE	PRESSURE SURFACE DEVIATION	SECTION TYPE
1	2.493	2.528	2.606	0.417	-0.032	0.101	0.5000	0.5000	0.27206	0.27340	-0.03	-1.07	DCA
3	2.485	2.518	2.593	0.410	-0.033	0.104	0.5000	0.5000	0.26201	0.26317	-0.03	-1.24	DCA
5	2.478	2.509	2.580	0.405	-0.034	0.106	0.5000	0.5000	0.25260	0.25361	-0.03	-1.41	DCA
7	2.471	2.500	2.568	0.399	-0.035	0.108	0.5000	0.5000	0.24379	0.24470	-0.03	-1.55	DCA
9	2.456	2.480	2.543	0.385	-0.036	0.109	0.5000	0.5000	0.22509	0.22576	-0.03	-1.84	DCA
11	2.442	2.462	2.520	0.373	-0.037	0.108	0.5000	0.5000	0.20952	0.21005	-0.03	-2.05	DCA
13	2.428	2.445	2.499	0.361	-0.037	0.104	0.5000	0.5000	0.19616	0.19665	-0.03	-2.20	DCA
15	2.414	2.429	2.479	0.350	-0.037	0.098	0.5000	0.5000	0.18486	0.18536	-0.03	-2.29	DCA
17	2.401	2.414	2.461	0.338	-0.037	0.091	0.5000	0.5000	0.17544	0.17592	-0.03	-2.33	DCA
19	2.388	2.399	2.443	0.327	-0.037	0.085	0.5000	0.5000	0.16700	0.16756	-0.03	-2.35	DCA
21	2.375	2.385	2.426	0.317	-0.037	0.080	0.5000	0.5000	0.15945	0.16017	-0.03	-2.35	DCA
23	2.362	2.371	2.410	0.307	-0.037	0.075	0.5000	0.5000	0.15204	0.15353	-0.03	-2.35	DCA
25	2.350	2.357	2.394	0.296	-0.036	0.071	0.5000	0.5000	0.14146	0.15276	-0.03	-2.31	DCA
27	2.337	2.344	2.379	0.287	-0.036	0.067	0.5000	0.5000	0.13276	0.15370	-0.03	-2.23	DCA
29	2.325	2.331	2.364	0.277	-0.036	0.065	0.5000	0.5000	0.12565	0.15638	-0.03	-2.11	DCA
31	2.312	2.318	2.350	0.268	-0.036	0.063	0.5000	0.5000	0.11998	0.16096	-0.02	-1.95	DCA
33	2.300	2.306	2.336	0.258	-0.037	0.061	0.5000	0.5000	0.11557	0.16765	-0.02	-1.75	DCA
35	2.288	2.294	2.323	0.249	-0.037	0.060	0.5000	0.5000	0.11213	0.17643	-0.02	-1.52	DCA
37	2.275	2.281	2.310	0.241	-0.038	0.060	0.5000	0.5000	0.10998	0.18865	-0.02	-1.23	DCA
39	2.263	2.269	2.297	0.232	-0.040	0.061	0.5000	0.5000	0.10905	0.20504	-0.02	-0.89	DCA
41	2.251	2.258	2.285	0.223	-0.042	0.062	0.5000	0.5000	0.10931	0.22681	-0.02	-0.47	DCA

STATOR 2 AT STATION 27
THERE ARE 60 AIRFOILS

S.L. NO.	RADII INLET	RADII EXIT	RADII AVERAGE	RADII STACK	CHORD	THICK -NESS	T/C	LER	TER	MAX. T/C LOCATION	INFLECTION LOCATION	FRONT CAMBER	REAR CAMBER
1	15.478	14.047	14.762	14.762	2.334	0.0968	0.041	0.0050	0.0050	0.500	0.500	19.19	19.18
3	15.558	14.133	14.845	14.869	2.334	0.0974	0.042	0.0050	0.0050	0.500	0.500	18.71	18.69
5	15.637	14.220	14.928	14.975	2.334	0.0981	0.042	0.0050	0.0050	0.500	0.500	18.26	18.25
7	15.715	14.306	15.011	15.081	2.334	0.0987	0.042	0.0050	0.0050	0.500	0.500	17.84	17.83
9	15.902	14.512	15.207	15.332	2.334	0.1003	0.043	0.0050	0.0050	0.500	0.500	16.99	16.98
11	16.082	14.713	15.397	15.575	2.334	0.1018	0.044	0.0051	0.0051	0.500	0.500	16.31	16.30
13	16.262	14.916	15.589	15.818	2.334	0.1033	0.044	0.0052	0.0052	0.500	0.500	15.75	15.75
15	16.442	15.119	15.781	16.059	2.334	0.1048	0.045	0.0052	0.0052	0.500	0.500	15.30	15.29
17	16.621	15.322	15.971	16.297	2.334	0.1063	0.046	0.0053	0.0053	0.500	0.500	14.95	14.94
19	16.800	15.524	16.162	16.534	2.334	0.1078	0.046	0.0054	0.0054	0.500	0.500	14.64	14.62
21	16.977	15.725	16.351	16.768	2.334	0.1093	0.047	0.0055	0.0055	0.500	0.500	14.37	14.34
23	17.154	15.926	16.540	16.999	2.334	0.1108	0.047	0.0055	0.0055	0.500	0.500	14.11	14.08
25	17.331	16.126	16.728	17.229	2.334	0.1123	0.048	0.0056	0.0056	0.500	0.500	13.91	13.87
27	17.506	16.325	16.916	17.456	2.334	0.1138	0.049	0.0057	0.0057	0.500	0.500	13.77	13.73
29	17.682	16.524	17.103	17.681	2.334	0.1153	0.049	0.0058	0.0058	0.500	0.500	13.70	13.65
31	17.857	16.723	17.290	17.903	2.334	0.1168	0.050	0.0058	0.0058	0.500	0.500	13.68	13.63
33	18.031	16.921	17.476	18.124	2.334	0.1183	0.051	0.0059	0.0059	0.500	0.500	13.72	13.67
35	18.205	17.118	17.662	18.343	2.334	0.1197	0.051	0.0060	0.0060	0.500	0.500	13.80	13.74
37	18.379	17.316	17.847	18.560	2.334	0.1212	0.052	0.0061	0.0061	0.500	0.500	13.95	13.88
39	18.552	17.513	18.032	18.775	2.334	0.1227	0.053	0.0061	0.0061	0.500	0.500	14.17	14.10
41	18.726	17.709	18.218	18.988	2.334	0.1241	0.053	0.0062	0.0062	0.500	0.500	14.47	14.38

S.L. NO.	PRESSURE SURFACE LENGTH	MEANLINE LENGTH	SUCTION SURFACE LENGTH	SECTION AREA	CONICAL CG LOCATION X	CONICAL CG LOCATION Y	STACK X	TABLE Y	WEDGE1 ANGLE F-CURV	WEDGE2 ANGLE R-CURV	SUCTION SURFACE INCIDENCE	PRESSURE SURFACE DEVIATION	SECTION TYPE
1	2.363	2.380	2.409	0.161	-0.032	0.121	0.5000	0.5000	0.28172	0.28149	-0.03	2.76	DCA
3	2.361	2.378	2.406	0.162	-0.030	0.118	0.5000	0.5000	0.27482	0.27462	-0.03	2.56	DCA
5	2.359	2.376	2.404	0.163	-0.029	0.114	0.5000	0.5000	0.26846	0.26829	-0.03	2.38	DCA
7	2.358	2.374	2.402	0.163	-0.027	0.111	0.5000	0.5000	0.26259	0.26244	-0.03	2.21	DCA
9	2.355	2.370	2.397	0.166	-0.025	0.105	0.5000	0.5000	0.25039	0.25029	-0.04	1.87	DCA
11	2.353	2.367	2.394	0.168	-0.023	0.099	0.5000	0.5000	0.24063	0.24057	-0.04	1.60	DCA
13	2.351	2.365	2.391	0.170	-0.021	0.095	0.5000	0.5000	0.23262	0.23254	-0.04	1.38	DCA
15	2.349	2.363	2.389	0.173	-0.020	0.091	0.5000	0.5000	0.22615	0.22602	-0.04	1.20	DCA
17	2.348	2.362	2.388	0.175	-0.019	0.088	0.5000	0.5000	0.22100	0.22084	-0.04	1.05	DCA
19	2.347	2.360	2.387	0.177	-0.018	0.085	0.5000	0.5000	0.21654	0.21629	-0.04	0.92	DCA
21	2.347	2.359	2.386	0.180	-0.017	0.083	0.5000	0.5000	0.21266	0.21227	-0.04	0.81	DCA
23	2.346	2.358	2.385	0.182	-0.016	0.080	0.5000	0.5000	0.20892	0.20846	-0.04	0.69	DCA
25	2.345	2.358	2.384	0.184	-0.016	0.078	0.5000	0.5000	0.20594	0.20543	-0.04	0.60	DCA
27	2.345	2.357	2.384	0.187	-0.015	0.077	0.5000	0.5000	0.20397	0.20341	-0.04	0.54	DCA
29	2.345	2.357	2.384	0.189	-0.015	0.076	0.5000	0.5000	0.20291	0.20225	-0.04	0.50	DCA
31	2.345	2.357	2.384	0.192	-0.015	0.075	0.5000	0.5000	0.20268	0.20196	-0.04	0.49	DCA
33	2.344	2.357	2.384	0.194	-0.015	0.074	0.5000	0.5000	0.20326	0.20246	-0.04	0.50	DCA
35	2.344	2.357	2.385	0.197	-0.015	0.074	0.5000	0.5000	0.20440	0.20351	-0.04	0.53	DCA
37	2.345	2.358	2.386	0.199	-0.015	0.074	0.5000	0.5000	0.20661	0.20559	-0.04	0.59	DCA
39	2.345	2.358	2.388	0.201	-0.015	0.075	0.5000	0.5000	0.20984	0.20869	-0.04	0.69	DCA
41	2.345	2.359	2.389	0.204	-0.016	0.077	0.5000	0.5000	0.21415	0.21287	-0.04	0.82	DCA

STATOR 3 AT STATION 47
THERE ARE 43 AIRFOILS

S.L. NO.	RADII INLET	RADII EXIT	RADII AVERAGE	RADII STACK	CHORD	THICK -NESS	T/C	LER	TER	MAX. T/C LOCATION	INFLECTION LOCATION	FRONT CAMBER	REAR CAMBER
1	20.549	21.375	20.962	20.962	6.500	0.3517	0.054	0.0176	0.0176	0.500	0.500	17.15	17.43
3	21.108	22.055	21.581	21.581	6.500	0.3586	0.055	0.0179	0.0179	0.500	0.500	17.16	17.44
5	21.642	22.662	22.152	22.152	6.500	0.3650	0.056	0.0182	0.0182	0.500	0.500	17.07	17.35
7	22.155	23.222	22.688	22.688	6.500	0.3709	0.057	0.0185	0.0185	0.500	0.500	16.96	17.22
9	23.304	24.425	23.864	23.864	6.500	0.3840	0.059	0.0192	0.0192	0.500	0.500	16.75	17.00
11	24.341	25.472	24.907	24.906	6.500	0.3956	0.061	0.0198	0.0198	0.500	0.500	16.59	16.80
13	25.322	26.444	25.883	25.883	6.500	0.4062	0.062	0.0203	0.0203	0.500	0.500	16.42	16.61
15	26.245	27.347	26.796	26.796	6.500	0.4133	0.064	0.0207	0.0207	0.500	0.500	16.30	16.47
17	27.119	28.195	27.657	27.657	6.500	0.4199	0.065	0.0210	0.0210	0.500	0.500	16.20	16.35
19	27.951	28.998	28.474	28.474	6.500	0.4262	0.066	0.0213	0.0213	0.500	0.500	16.14	16.25
21	28.746	29.763	29.254	29.25[illegible]	6.500	0.4323	0.067	0.0216	0.0216	0.500	0.500	16.12	16.17
23	29.508	30.495	30.001	30.001	6.500	0.4380	0.067	0.0219	0.0219	0.500	0.500	16.13	16.12
25	30.241	31.199	30.720	30.720	6.500	0.4436	0.068	0.0222	0.0222	0.500	0.500	16.13	16.08
27	30.948	31.878	31.413	31.412	6.500	0.4489	0.069	0.0224	0.0224	0.500	0.500	16.25	16.07
29	31.631	32.534	32.083	32.082	6.500	0.4541	0.070	0.0227	0.0227	0.500	0.500	16.30	16.05
31	32.294	33.173	32.734	32.733	6.500	0.4591	0.071	0.0230	0.0230	0.500	0.500	16.30	15.99
33	32.940	33.798	33.369	33.369	6.500	0.4640	0.071	0.0232	0.0232	0.500	0.500	16.24	15.87
35	33.572	34.418	33.995	33.995	6.500	0.4688	0.072	0.0234	0.0234	0.500	0.500	16.11	15.73
37	34.192	35.036	34.614	34.614	6.500	0.4736	0.073	0.0237	0.0237	0.500	0.500	15.93	15.54
39	34.804	35.658	35.231	35.231	6.500	0.4784	0.074	0.0239	0.0239	0.500	0.500	15.66	15.28
41	35.411	36.295	35.853	35.853	6.500	0.4832	0.074	0.0242	0.0242	0.500	0.500	15.32	14.93

S.L. NO.	PRESSURE SURFACE LENGTH	MEANLINE LENGTH	SUCTION SURFACE LENGTH	SECTION AREA	CONICAL CG LOCATION X	CONICAL CG LOCATION Y	STACK X	TABLE Y	WEDGE1 ANGLE F-CURV	WEDGE2 ANGLE R-CURV	SUCTION SURFACE INCIDENCE	PRESSURE SURFACE DEVIATION	SECTION TYPE
1	6.546	6.596	6.692	1.615	-0.079	0.299	0.5000	0.5000	0.09071	0.09217	-0.07	-0.71	DCA
3	6.546	6.596	6.694	1.646	-0.078	0.296	0.5000	0.5000	0.09075	0.09222	-0.07	-0.69	DCA
5	6.544	6.594	6.694	1.675	-0.076	0.292	0.5000	0.5000	0.09030	0.09175	-0.07	-0.70	DCA
7	6.543	6.593	6.694	1.702	-0.075	0.287	0.5000	0.5000	0.08971	0.09111	-0.07	-0.72	DCA
9	6.540	6.591	6.694	1.761	-0.071	0.277	0.5000	0.5000	0.08867	0.08994	-0.07	-0.76	DCA
11	6.538	6.589	6.695	1.814	-0.069	0.270	0.5000	0.5000	0.08780	0.08895	-0.07	-0.80	DCA
13	6.536	6.587	6.696	1.862	-0.066	0.262	0.5000	0.5000	0.08698	0.08797	-0.03	-0.84	DCA
15	6.534	6.586	6.696	1.893	-0.064	0.255	0.5000	0.5000	0.08634	0.08725	-0.03	-0.83	DCA
17	6.533	6.585	6.697	1.923	-0.062	0.250	0.5000	0.5000	0.08584	0.08662	-0.03	-0.82	DCA
19	6.532	6.584	6.698	1.952	-0.061	0.245	0.5000	0.5000	0.08554	0.08611	-0.03	-0.80	DCA
21	6.532	6.584	6.699	1.979	-0.060	0.241	0.5000	0.5000	0.08543	0.08571	-0.02	-0.77	DCA
23	6.531	6.584	6.700	2.005	-0.059	0.238	0.5000	0.5000	0.08547	0.08541	-0.02	-0.74	DCA
25	6.531	6.584	6.702	2.031	-0.058	0.234	0.5000	0.5000	0.08549	0.08521	-0.02	-0.70	DCA
27	6.531	6.584	6.705	2.055	-0.057	0.232	0.5000	0.5000	0.08612	0.08519	-0.01	-0.64	DCA
29	6.530	6.584	6.707	2.079	-0.057	0.229	0.5000	0.5000	0.08639	0.08508	-0.01	-0.59	DCA
31	6.530	6.584	6.708	2.102	-0.056	0.226	0.5000	0.5000	0.08640	0.08478	-0.01	-0.57	DCA
33	6.529	6.583	6.708	2.124	-0.054	0.221	0.5000	0.5000	0.08606	0.08412	0.00	-0.58	DCA
35	6.528	6.582	6.707	2.145	-0.053	0.216	0.5000	0.5000	0.08544	0.08340	0.00	-0.59	DCA
37	6.527	6.580	6.706	2.166	-0.051	0.210	0.5000	0.5000	0.08451	0.08243	0.00	-0.64	DCA
39	6.525	6.577	6.703	2.187	-0.049	0.202	0.5000	0.5000	0.08310	0.08108	0.00	-0.74	DCA
41	6.524	6.574	6.699	2.208	-0.046	0.193	0.5000	0.5000	0.08132	0.07929	0.00	-0.89	DCA

7 AUG 91

PLOT FLOW PATH
PAGE 1
COPY 2 OF 2

AIRFOIL EDGE COORDINATES - AXIAL,RADIAL

ROTOR 1	-4.322 10.666	-4.432 11.946	-4.506 13.084	-4.560 14.120	-4.595 16.315	-4.637 18.171
	-4.709 19.847	-4.771 21.380	-4.824 22.799	-4.859 24.130	-4.885 25.386	-4.903 26.578
	-4.917 27.715	-4.928 28.803	-4.936 29.850	-4.934 30.859	-4.923 31.835	-4.884 32.781
	-4.832 33.699	-4.755 34.591	-4.633 35.458	5.809 35.404	5.940 34.651	6.025 33.897
	6.087 33.134	6.134 32.356	6.155 31.558	6.164 30.732	6.164 29.874	6.160 28.980
	6.152 28.045	6.139 27.063	6.117 26.024	6.085 24.918	6.034 23.723	5.972 22.409
	5.896 20.902	5.842 19.077	5.785 17.034	5.723 16.148	5.641 15.224	5.524 14.240
REFERENCE POINT	0.590 12.449					
STATOR 1	7.584 14.892	7.584 15.007	7.583 15.120	7.583 15.232	7.581 15.497	7.580 15.751
	7.578 16.004	7.577 16.253	7.575 16.493	7.574 16.741	7.573 16.980	7.572 17.215
	7.572 17.449	7.571 17.679	7.570 17.906	7.570 18.131	7.570 18.354	7.570 18.574
	7.570 18.792	7.570 19.008	7.570 19.222	10.154 19.753	10.154 19.539	10.154 19.325
	10.155 19.111	10.154 18.895	10.154 18.679	10.154 18.461	10.153 18.242	10.153 18.020
	10.152 17.797	10.151 17.571	10.150 17.343	10.149 17.112	10.148 16.879	10.146 16.642
	10.145 16.401	10.143 16.159	10.142 15.906	10.141 15.798	10.141 15.689	10.140 15.578
REFERENCE POINT	8.862 15.235					
ROTOR 2	10.819 15.681	10.826 15.788	10.833 15.893	10.840 15.998	10.857 16.243	10.874 16.479
	10.891 16.713	10.908 16.944	10.924 17.173	10.941 17.399	10.958 17.623	10.975 17.845
	10.991 18.066	11.007 18.284	11.022 18.502	11.038 18.719	11.052 18.935	11.067 19.150
	11.081 19.366	11.095 19.582	11.109 19.799	12.958 19.555	12.972 19.353	12.986 19.150
	13.000 18.948	13.015 18.745	13.030 18.542	13.045 18.338	13.061 18.134	13.077 17.929
	13.094 17.723	13.110 17.517	13.127 17.310	13.144 17.103	13.161 16.894	13.178 16.685
	13.196 16.475	13.212 16.266	13.230 16.050	13.237 15.959	13.244 15.867	13.251 15.775
REFERENCE POINT	12.035 15.728					
STATOR 2	14.638 15.349	14.636 15.455	14.635 15.561	14.633 15.666	14.629 15.914	14.626 16.153
	14.622 16.392	14.618 16.628	14.614 16.861	14.610 17.092	14.606 17.320	14.603 17.546
	14.599 17.769	14.595 17.990	14.591 18.208	14.588 18.425	14.584 18.639	14.581 18.851
	14.578 19.060	14.574 19.268	14.571 19.474	16.671 18.502	16.667 18.281	16.664 18.059
	16.661 17.836	16.657 17.610	16.654 17.382	16.650 17.153	16.647 16.922	16.643 16.688
	16.639 16.453	16.635 16.215	16.631 15.976	16.628 15.734	16.624 15.490	16.620 15.245
	16.616 14.997	16.612 14.751	16.608 14.497	16.606 14.390	16.605 14.283	16.603 14.176
REFERENCE POINT	15.621 14.762					
STATOR 3	19.158 20.481	19.168 21.032	19.174 21.562	19.177 22.071	19.179 23.216	19.176 24.252
	19.172 25.233	19.167 26.157	19.161 27.032	19.156 27.865	19.151 28.661	19.146 29.425
	19.142 30.160	19.138 30.868	19.134 31.553	19.130 32.218	19.127 32.865	19.124 33.497
	19.122 34.117	19.121 34.728	19.122 35.333	25.476 36.373	25.476 35.733	25.475 35.111
	25.474 34.492	25.471 33.873	25.468 33.249	25.464 32.612	25.460 31.957	25.456 31.280
	25.452 30.578	25.447 29.847	25.443 29.083	25.438 28.282	25.432 27.435	25.428 26.533
	25.424 25.561	25.421 24.512	25.423 23.305	25.426 22.743	25.432 22.130	25.442 21.443
REFERENCE POINT	22.298 20.962					

7 AUG 91

PLOT FLOW PATH
PAGE 1
COPY 1 OF 1

AIRFOIL EDGE COORDINATES - AXIAL,RADIAL

ROTOR	1	-4.322	10.666	-4.432	11.946	-4.506	13.084	-4.560	14.120	-4.595	16.315	-4.637	18.171
		-4.709	19.847	-4.771	21.380	-4.824	22.799	-4.859	24.130	-4.885	25.386	-4.903	26.578
		-4.917	27.715	-4.928	28.803	-4.936	29.850	-4.934	30.859	-4.923	31.835	-4.884	32.781
		-4.832	33.699	-4.755	34.591	-4.633	35.458	5.809	35.404	5.940	34.651	6.025	33.897
		6.087	33.134	6.134	32.356	6.155	31.558	6.164	30.732	6.164	29.874	6.160	28.980
		6.152	28.045	6.139	27.063	6.117	26.024	6.085	24.918	6.034	23.723	5.972	22.409
		5.896	20.902	5.842	19.077	5.785	17.034	5.723	16.148	5.641	15.224	5.524	14.240
REFERENCE POINT			0.590	12.449									
STATOR	1	7.584	14.892	7.584	15.007	7.583	15.120	7.583	15.232	7.581	15.497	7.580	15.751
		7.578	16.004	7.577	16.253	7.575	16.498	7.574	16.741	7.573	16.980	7.572	17.215
		7.572	17.449	7.571	17.679	7.570	17.906	7.570	18.131	7.570	18.354	7.570	18.574
		7.570	18.792	7.570	19.008	7.570	19.222	10.154	19.753	10.154	19.539	10.154	19.325
		10.155	19.111	10.154	18.895	10.154	18.679	10.154	18.461	10.153	18.242	10.153	18.020
		10.152	17.797	10.151	17.571	10.150	17.343	10.149	17.112	10.148	16.879	10.146	16.642
		10.145	16.401	10.143	16.159	10.142	15.906	10.141	15.798	10.141	15.689	10.140	15.578
REFERENCE POINT			8.862	15.235									
ROTOR	2	10.819	15.681	10.826	15.788	10.833	15.893	10.840	15.998	10.857	16.243	10.874	16.479
		10.891	16.713	10.908	16.944	10.924	17.173	10.941	17.399	10.958	17.623	10.975	17.845
		10.991	18.066	11.007	18.284	11.022	18.502	11.038	18.719	11.052	18.935	11.067	19.150
		11.081	19.366	11.095	19.582	11.109	19.799	12.958	19.555	12.972	19.353	12.986	19.150
		13.000	18.948	13.015	18.745	13.030	18.542	13.045	18.338	13.061	18.134	13.077	17.929
		13.094	17.723	13.110	17.517	13.127	17.310	13.144	17.103	13.161	16.894	13.178	16.685
		13.196	16.475	13.212	16.266	13.230	16.050	13.237	15.959	13.244	15.867	13.251	15.775
REFERENCE POINT			12.035	15.728									
STATOR	2	14.638	15.349	14.636	15.455	14.635	15.561	14.633	15.666	14.629	15.914	14.626	16.153
		14.622	16.392	14.618	16.628	14.614	16.861	14.610	17.092	14.606	17.320	14.603	17.546
		14.599	17.769	14.595	17.990	14.591	18.208	14.588	18.425	14.584	18.639	14.581	18.851
		14.578	19.060	14.574	19.268	14.571	19.474	16.671	18.502	16.667	18.281	16.664	18.059
		16.661	17.836	16.657	17.610	16.654	17.382	16.650	17.153	16.647	16.922	16.643	16.688
		16.639	16.453	16.635	16.215	16.631	15.976	16.628	15.734	16.624	15.490	16.620	15.245
		16.616	14.997	16.612	14.751	16.608	14.497	16.606	14.390	16.605	14.283	16.603	14.176
REFERENCE POINT			15.621	14.762									
STATOR	3	19.158	20.481	19.168	21.032	19.174	21.562	19.177	22.071	19.179	23.216	19.176	24.252
		19.172	25.233	19.167	26.157	19.161	27.032	19.156	27.865	19.151	28.661	19.146	29.425
		19.142	30.160	19.138	30.868	19.134	31.553	19.130	32.218	19.127	32.865	19.124	33.497
		19.122	34.117	19.121	34.728	19.122	35.333	25.476	35.373	25.476	35.733	25.475	35.111
		25.474	34.492	25.471	33.873	25.468	33.249	25.464	32.612	25.460	31.957	25.456	31.280
		25.452	30.578	25.447	29.847	25.443	29.083	25.438	28.282	25.432	27.435	25.428	26.533
		25.424	25.561	25.421	24.512	25.423	23.305	25.426	22.743	25.432	22.130	25.442	21.443
REFERENCE POINT			22.298	20.962									

```
      A VIRTUALLY COMPLETE INPUT DATA SET HAS BEEN PUNCHED FOR YOUR CONVENIENCE.
THIS DATA SET SHOULD BE CAREFULLY EXAMINED FOR COMPLETENESS.
CERTAIN INPUT OPTIONS AND ALL OUTPUT OPTIONS HAVE BEEN INTENTIONALLY OMITTED.


    CARDS HAVE BEEN PUNCHED WHICH WILL RESTART THE CALCULATION
IF THEY ARE USED TO REPLACE THE END CARD ON FUTURE RUNS.
THE NUMBER OF STREAMLINES AND CALCULATION STATION MUST BE THE SAME.
MODIFICATIONS MAY BE MADE TO THE AIRFOIL GEOMETRY AND AERODYNAMIC PARAMETERS.

TOTAL CPU TIME AFTER OUTPUT      29.0

                          ********** ALL DATA HAS BEEN PROCESSED **********
```

Appendix B

NASA Low Noise BPR = 14 Model

```
TERMAP (VER 12)  TITLE=  NASA LOW NOISE MODEL (FLOW SCALE DOWN OF MDXX BPR=14 SHORT BYP DUCT MODEL)        DATE= 04-09-92 CASE=    1.0
(CMS  04-06-92) STITLE=  OFF-DESIGN CHECK ON DESIGN POINT                                                   TIME= 12:59:30 PAGE=      4

   ALT    PAMB   TAMBF  TAMBR  DTAMB DTAMTP PRELHM  KTAS    KCAS    XM     RPR   DEFF   ERAM     P1    T1R   DEFTIP ERAMTP   PTIP  TTIPR
 39000.  2.854 -69.70 389.97    0.0    0.0    0.0  458.9   248.1  0.800  1.517 0.9950 0.9950  4.331 440.03 0.0000 0.0000  0.000    0.0

(N) ID    NSI    T-R       P      W-COR      W        R       EFF      FAR      AREA    XMN      PS    THETA  DELTA     H     SF-N,1  (N)
--- --    ---    ---       -      -----      -        -       ---      ---      ----    ---      --    -----  -----     -     ------  ---
 1 FAN     0    440.0    4.331  1035.186  331.191  1.3816  0.8920  0.00000     0.0  0.000    0.000  0.848  0.295  105.12  1.0191    1
 2 DELP    0    487.8    5.983    54.839   23.022  0.9900  0.0000  0.00000   384.3  0.250    5.729  0.941  0.407  116.57  0.2349    2
 3 HPC     0    487.8    5.924    55.397   23.024 24.7455  0.3551  0.00000     0.0  0.000    0.000  0.941  0.403  116.57  1.0241    3
 4 COOL    0   1316.1  146.582     3.335   20.880  0.0000  0.0000  0.00000     0.0  0.000    0.000  2.537  9.974  321.11  0.0000    4
 5 DELP    0   1316.1  146.582     3.335   20.380  1.0000  0.0000  0.00000    23.7  0.250  140.512  2.537  9.974  321.11  0.0000    5
 6 DELP    0   1316.1  146.582     3.335   20.880  0.9773  0.0000  0.00000    20.6  0.291  138.446  2.537  9.974  321.11  0.4000    6
 7 HX C    0   1316.1  143.328     3.045   18.646  1.0000  0.0000  0.00000    26.7  0.200  139.493  2.537  9.753  321.11  0.0000    7
 8 BURN    0   1300.8  143.328     3.028   18.646  0.9818  0.9990  0.00000    26.5  0.200  139.491  2.508  9.753  317.16  0.6799    8
 9 COOL    0   2898.2  140.719     4.725   19.140  0.0000  0.0000  0.02648     0.0  0.000    0.000  5.588  9.575  789.51  0.0000    9
10 HPT     0   2813.0  140.719     5.093   20.345  4.8199  0.8970  0.02487     0.0  0.000    0.000  5.243  9.575  761.78  1.0046   10
11 PWRK    0   2046.6   29.195    20.343   20.345  0.0000  0.0000  0.02487     0.0  0.000    0.000  3.946  1.987  533.17  0.0007   11
12 COOL    0   2029.3   29.195    21.057   21.148  0.0000  0.0000  0.02391     0.0  0.000    0.000  3.912  1.987  527.55  0.0000   12
13 DELP    0   1982.2   29.195    21.989   22.346  0.9970  0.0000  0.02260   196.0  0.200   28.441  3.822  1.987  513.20  0.1163   13
14 LPT     0   1982.2   29.108    22.563   22.346  5.1714  0.9260  0.02260     0.0  0.000    0.000  3.722  1.981  513.21  1.0003   14
15 COOL    0   1370.9    5.629    94.853   22.346  0.0000  0.0000  0.02260     0.0  0.000    0.000  2.643  0.383  342.68  0.0000   15
16 DELP    0   1370.5    5.629    95.461   22.492  0.9922  0.0000  0.02245   406.6  0.456    4.907  2.642  0.383  342.54  0.0609   16
17 COOL    0   1370.5    5.585    96.211   22.492  0.0000  0.0000  0.02245     0.0  0.000    0.000  2.642  0.380  342.54  0.0000   17
18 NOZZ    0   1364.8    5.585    96.896   22.699  1.9568  0.0000  0.02224     1.0  0.000    0.000  2.631  0.380  340.95  0.0000   18
19  TH8    0   1161.2    2.989   166.964   22.699  1.8631  0.0000  0.02224   294.2  1.000    2.990  2.239  0.203  286.96  0.9997   19
20  EX9    0   1161.2    2.989   166.964   22.699  1.0475  0.0000  0.02224   294.2  1.000    2.854  2.239  0.203  286.96  0.0000   20
--- --    ---    ---       -      -----      -        -       ---      ---      ----    ---      --    -----  -----     -     ------  ---
21 COOL    0    487.8    5.983   734.086  308.170  0.0000  0.0000  0.00000     0.0  0.000    0.000  0.941  0.407  116.57  0.0000   21
22 DELP    0    487.8    5.983   734.086  308.170  0.9963  0.0000  0.00000  3500.0  0.386    5.398  0.941  0.407  116.57  0.0378   22
23 HX H    0    487.8    5.961   736.814  308.170  1.0000  0.0185  0.00000  3500.0  0.388    5.373  0.941  0.406  116.57  0.0000   23
24 DELP    0    488.8    5.961   737.567  308.170  1.0000  0.0000  0.00000  3500.0  0.388    5.372  0.942  0.406  116.80  0.0000   24
25 NOZZ    0    488.8    5.961   737.567  308.170  2.0887  0.0000  0.00000     1.0  0.000    0.000  0.942  0.406  116.81  0.0000   25
26 TH18    0    407.1    3.146  1275.279  308.170  1.8946  0.0000  0.00000  2185.2  1.000    3.146  0.785  0.214   97.25  1.0003   26
27 EX19    0    407.1    3.146  1275.279  308.170  1.1025  0.0000  0.00000  2185.2  1.000    2.854  0.785  0.214   97.25  0.0000   27
--- --    ---    ---       -      -----      -        -       ---      ---      ----    ---      --    -----  -----     -     ------  ---

S 1= RC-OA   =    33.8469 : S 2=EMAP(7) =  -15.2843 : S 3= EFF(23)=     0.0185

Y 1=      0.8969= COMP POLY EFF AT STATION  1                          : Y16=99999.0000=          0.000000 -              0.000000 +99999.0000
Y 2=      0.9045= COMP POLY EFF AT STATION  3                          : Y17=     2.8150=          P(25)  -   PS(26)               +      0.0000
Y 3= 2353.3635=           T(10)   -          459.669922 +    0.0000 : Y18=    82.8749=        YCOMPD17 *           29.440002 +      0.0000
Y 4=   228.6091=           H(10)   -   H(11)                +    0.0000 : Y19= 3207.7358=          FN      - YCOMPD18            +      0.0000
Y 5=    43.6054=        YCOMPD 4 / THETA 10                 +    0.0000 : Y20=     0.5541=          WFE     / YCOMPD19            +      0.0000
Y 6=   170.5220=           H(14)   -   H(15)                +    0.0000 : Y21=    20.9770=          T(1)    **         0.500000 +      0.0000
Y 7=    45.8124=        YCOMPD 6 / THETA 14                 +    0.0000 : Y22=     4.8438=        YCOMPD21 /   P(1)             +-      0.0000
Y 8=      1.0852=        RNI(14) /               0.379900 +    0.0000 : Y23= 1604.2083=        YCOMPD22 *   WD(1)            +      0.0000
Y 9= 4218.6367=        XNMAP 14 *            42.203995 +    0.0000 : Y39=     0.6019=          V-19    /   V-9              +      0.0000
Y10=      1.9293=        THETA 14 **              0.500000 +    0.0000 : Y40=     0.9950=        0.000000 -          0.000000 +      0.9950
Y11= 8138.9922=        YCOMPD 9 * YCOMPD10                 +    0.0000 : Y41=    26.9559=          HP(14)  *          0.005000 +      0.0000
Y12=     10.0265=          FAR(9)  -              0.000000 +   10.0000 : Y42=     0.9990=          T(24)   -   T(23)            +      0.0000
Y15=      0.0000=        0.000000 -              0.000000 +    0.0000 : Y43=11269.3477=          XN(1)   *          4.490000 +      0.0000

T 1=   375.0002  X=YCOMPD15 Z=            W=              ID=03/11/91 E=2 : T 3=      0.4327  X=RMAP(14) Z=XNMAP 14 W=           ID=LPT X MN E=1
T 2= 2184.6992  X=  XM      Z=XNMAP   1 W=              ID=BYP AREA E=3 : T 4=      0.9950  X=YCOMPD23 Z=  XM      W=           ID=INLETREC E=1

P 1=YCOMPD41--> HPX(1)  : P 4=YTABLE 4--> DEFF

    --VARY-- ---HI--- ---LO---  (+)   OBJECT = TARGET   (+) LIM
C19= AREA(26)  2817.00  2183.00 1.00  AREA(26) YTABLE 2 0.00 L=1

MODE=  T(10)   PLA=  2813.000  ADDPLA=     0.000  PLA LIMIT= PLA
IDEC=0  NVAR=10  MAX ERR# 1= 19.CONSTR.  = 0.00023  MATRX= 0  LOOP= 14
IOMT  LOOPS=  1  MAX ERROR =       0.    = 0.00000

                  B L E E D S    A N D    L E A K A G E S
                  ---------------------------------------
     FR - TO %W(FR)  %W(1)       W     T-R      P        H    DH/DHT :      FR - TO %W(FR)  %W(1)       W     T-R      P        H    DH/DHT
B 3=  3 - 12 0.0520 0.0036    1.197 1075.1  74.892  259.75 0.7000 : B 7=  3 - OB 0.0000 0.0000    0.000  993.2  57.762  239.29 0.6000
B 5=  3 - 17 0.0090 0.0006    0.207  700.6  18.740  167.70 0.2500 : B 9=  3 - OB 0.0321 0.0022    0.739  910.4  43.528  218.84 0.5000
 STA  3 TOTL 0.0931 0.0065    2.143

     FR - TO %W(FR)  %W(1)       W     T-R      P        H    DH/DHT :      FR - TO %W(FR)  %W(1)       W     T-R      P        H    DH/DHT
B 1=  6 -  9 0.0577 0.0036    1.205 1316.1 143.328  321.11 1.0000 : B 6=  6 - 21 0.0000 0.0000    0.000 1316.1 143.328  321.11 1.0000
B 2=  6 - 11 0.0385 0.0024    0.804 1316.1 143.328  385.48 1.0000 : B 8=  6 - OB 0.0038 0.0002    0.079 1316.1 143.328  321.11 1.0000
B 4=  6 - 15 0.0070 0.0004    0.146 1316.1 145.768  321.11 0.2500
 STA  6 TOTL 0.1070 0.0067    2.234

     FR - TO %W(FR)  %W(1)       W     T-R      P        H    DH/DHT
B10= 22 - OB 0.0000 0.0000    0.000  487.8   5.961  116.57 1.0000
 STA 22 TOTL 0.0000 0.0000    0.000

                 C O M P O N E N T    P E R F O R M A N C E
                 ------------------------------------------
  N  ID       BETA      XN      XN-MAP      HP    HPX/PHP  SF(N,2)    W-MAP  EFF-MAP    R-MAP    SMRELL    FLOW ID    EFF ID   MAPTYP
  1 FAN     1.0004  2509.877    99.955  5363.81    26.96   0.0000  969.885   0.8753   1.5196    21.275  QUIETENG  QUIETENG      1
  3 HPC     0.9998 11021.020    99.968  6402.14   100.30   0.0000   89.828   0.8350  22.5681    20.115   0.  0.    0.  0.       1
 10 HPT     0.0000 11021.020    99.968  6507.21    73.22   0.0000    1.000   0.8929   4.0600     6.201  JAN.2690  JAN.2690      1
 14 LPT     0.0000  2509.877    99.958  5391.19     0.00   0.0000    1.000   0.9247   5.1714     6.548  ANALYTIC  ANALYTIC      1
 14 LPT                       RNISF(1,14),(2,14),(3,14),(4,14)=  1.00048  1.00112  1.00000   1.00000

                    N O Z Z L E    P E R F O R M A N C E
                    ------------------------------------
  NOZZLE      (N)  TYP      FG        FN       RJ     CFG       CD   AREA(TH)  V-EXIT  SF(TH,2) SF(EX,2)   CFGT ID    CDT ID  MAPTYP
PRI (8-9)     18    1    1193.93    639.69  1.9568  0.9959  0.9730    294.19  1644.2     0.248    0.000  CFG MDXX  CD  MDXX     1
SEC (18-19)   25    1   10069.94   2650.92  2.0887  0.9963  0.9838   2185.20   989.6     1.865    0.000  CFG MDXX  CD  MDXX     1

                F I N A L    E N G I N E    P E R F O R M A N C E
                -------------------------------------------------
 BPR(1) RMIX(1) GAINMX(1) ANGMIX(1)     BPR(2) RMIX(2) GAINMX(2) ANGMIX(2)
13.3861  1.0674  0.0000     0.0000      0.0000  0.0000  0.0000     0.0000

   FG      FRAM    WFE   FARST   EPR    WAENG    WACOR   RCOA    FNR1   FNGF
11263.9  7973.3  1777.5 .06775  1.290  331.191 1035.186  33.85  11167. 1.0000

   FN      SFC     WFT    FHV   NODISS   EFFTH     FN/WA  EFFOA   WFTR1  WFTGF
3290.6  0.5402  1777.5 18550.     0     0.3586   9.9357 0.8450   6549. 1.0000

WARNING: TABLE(S) EXTRAPOLATED.
```

```
TERMAP (VER 12)  TITLE=  NASA LOW NOISE MODEL (FLOW SCALE DOWN OF MDXX BPR=14 SHORT BYP DUCT MODEL)        DATE= 04-09-92 CASE=    2.0
(CMS  04-06-92) STITLE= CRUISE OD CHECK ON DESIGN POINT                                                   TIME= 12:59:30 PAGE=      5

   ALT    PAMB   TAMBF  TAMBR  DTAMB DTAMTP PRELHM  KTAS    KCAS    XM     RPR   DEFF    ERAM     P1     T1R   DEFTIP ERAMTP  PTIP  TTIPR
 39000.  2.854 -69.70 389.97    0.0    0.0    0.0  458.9   248.1  0.800  1.517 0.9950 0.9950  4.331 440.03 0.0000 0.0000  0.000   0.0

(N) ID     NSI     T-R       P       W-COR       W        R        EFF       FAR       AREA    XMN      PS     THETA  DELTA     H      SF-N,1  (N)
--- --     ---     ---       -       -----       -        -        ---       ---       ----    ---      --     -----  -----     -      ------  ---
 1 FAN      0     440.0    4.331  1008.316  322.595   1.3453   0.8945   0.00000      0.0   0.000    0.000   0.848  0.295   105.12  1.0191    1
 2 DELP     0     483.6    5.826    52.450   21.533   0.9909   0.0000   0.00000    384.3   0.238    5.601   0.932  0.396   115.55  0.2349    2
 3 HPC      0     483.6    5.773    52.938   21.536  23.2121   0.8583   0.00000      0.0   0.000    0.000   0.932  0.393   115.55  1.0241    3
 4 COOL     0    1278.9  134.009     3.355   19.484   0.0000   0.0000   0.00000      0.0   0.000    0.000   2.466  9.119   311.50  0.0000    4
 5 DELP     0    1278.9  134.009     3.355   19.484   1.0000   0.0000   0.00000     23.7   0.251  128.389   2.466  9.119   311.50  0.0000    5
 6 DELP     0    1278.9  134.009     3.355   19.484   0.9775   0.0000   0.00000     20.6   0.293  126.475   2.466  9.119   311.50  0.4000    6
 7 HX C     0    1278.9  130.995     3.065   17.399   1.0000   0.0000   0.00000     26.7   0.201  127.444   2.466  8.914   311.50  0.0000    7
 8 BURN     0    1264.2  130.995     3.047   17.399   0.9816   0.9990   0.00000     26.5   0.201  127.442   2.437  8.914   307.73  0.6799    8
 9 COOL     0    2790.4  128.579     4.728   17.834   0.0000   0.0000   0.02501      0.0   0.000    0.000   5.380  8.749   755.03  0.0000    9
10 HPT      0    2708.7  128.579     5.093   18.958   4.8270   0.8971   0.02349      0.0   0.000    0.000   5.053  8.749   728.73  1.0046   10
11 PWRK     0    1964.9   26.638    20.357   18.958   0.0000   0.0000   0.02349      0.0   0.000    0.000   3.788  1.813   508.72  0.0007   11
12 COOL     0    1948.8   26.638    21.076   19.708   0.0000   0.0000   0.02258      0.0   0.000    0.000   3.757  1.813   503.58  0.0000   12
13 DELP     0    1904.0   26.638    22.016   20.828   0.9970   0.0000   0.02134    196.0   0.200   25.948   3.671  1.813   490.09  0.1163   13
14 LPT      0    1904.0   26.557    22.568   20.828   5.1182   0.9248   0.02134      0.0   0.000    0.000   3.580  1.807   490.09  1.0003   14
15 COOL     0    1316.2    5.189    93.972   20.828   0.0000   0.0000   0.02134      0.0   0.000    0.000   2.538  0.353   327.66  0.0000   15
16 DELP     0    1316.0    5.189    94.578   20.964   0.9924   0.0000   0.02120    406.6   0.450    4.539   2.537  0.353   327.55  0.0609   16
17 COOL     0    1316.0    5.149    95.305   20.964   0.0000   0.0000   0.02120      0.0   0.000    0.000   2.537  0.350   327.56  0.0000   17
18 NOZZ     0    1310.6    5.149    95.989   21.158   1.8042   0.0000   0.02100      1.0   0.000    0.000   2.527  0.350   326.06  0.0000   18
19  TH8     0    1123.7    2.854   160.366   21.158   1.8042   0.0000   0.02100    294.2   0.969    2.854   2.167  0.194   276.89  1.0000   19
20  EX9     0    1123.7    2.854   160.366   21.158   1.0000   0.0000   0.02100    294.2   0.969    2.854   2.167  0.194   276.89  0.0000   20
--- --     ---     ---       -       -----       -        -        ---       ---       ----    ---      --     -----  -----     -      ------  ---
21 COOL     0     483.6    5.826   733.314  301.061   0.0000   0.0000   0.00000      0.0   0.000    0.000   0.932  0.396   115.55  0.0000   21
22 DELP     0     483.6    5.826   733.314  301.061   0.9963   0.0000   0.00000   3500.0   0.386    5.257   0.932  0.396   115.55  0.0378   22
23 HX H     0     483.6    5.804   736.032  301.061   1.0000   0.0185   0.00000   3500.0   0.387    5.233   0.932  0.395   115.55  0.0000   23
24 DELP     0     484.5    5.804   736.726  301.061   1.0000   0.0000   0.00000   3500.0   0.388    5.232   0.934  0.395   115.77  0.0000   24
25 NOZZ     0     484.5    5.804   736.726  301.061   2.0338   0.0000   0.00000      1.0   0.000    0.000   0.934  0.395   115.77  0.0000   25
26 TH18     0     403.5    3.064  1273.856  301.061   1.8946   0.0000   0.00000   2184.8   1.000    3.064   0.778  0.208    96.38  1.0000   26
27 EX19     0     403.5    3.064  1273.856  301.061   1.0735   0.0000   0.00000   2184.8   1.000    2.854   0.778  0.208    96.38  0.0000   27
--- --     ---     ---       -       -----       -        -        ---       ---       ----    ---      --     -----  -----     -      ------  ---

S 1= RC-OA   =    30.9438 : S 2=EMAP(7) =  -14.6750 : S 3= EFF(23)=     0.0185

Y 1=     0.8988= COMP POLY EFF AT STATION  1                           : Y16=99999.0000=          0.000000 -             0.000000 +99999.0000
Y 2=     0.9059= COMP POLY EFF AT STATION  3                           : Y17=     2.7408=           P(25)   -   PS(26)             +     0.0000
Y 3= 2249.0200=            T(10)   -           459.669922 +    0.0000 : Y18=    80.6889=          YCOMPD17 *            29.440002 +     0.0000
Y 4=  220.0134=            H(10)   -    H(11)                +    0.0000 : Y19= 2812.2786=            FN     - YCOMPD18           +     0.0000
Y 5=   43.5422=          YCOMPD 4 / THETA 10                 +    0.0000 : Y20=     0.5570=           WFE     / YCOMPD19           +     0.0000
Y 6=  162.4312=            H(14)   -    H(15)                +    0.0000 : Y21=    20.9770=            T(1)   **            0.500000 +     0.0000
Y 7=   45.3771=          YCOMPD 6 / THETA 14                 +    0.0000 : Y22=     4.8438=          YCOMPD21 /    P(1)              +     0.0000
Y 8=    1.0346=            RNI(14) /              0.379900 +    0.0000 : Y23= 1562.5681=          YCOMPD22 *    WD(1)             +     0.0000
Y 9= 4147.3516=          XNMAP 14 *              42.203995 +    0.0000 : Y39=     0.6279=          V-19     /    V-9               +     0.0000
Y10=    1.8920=          THETA 14 **              0.500000 +    0.0000 : Y40=     0.9950=          0.000000 -             0.000000 +     0.9950
Y11= 7846.6953=          YCOMPD 9 * YCOMPD10                 +    0.0000 : Y41=    23.9327=           HP(14)  *             0.005000 +     0.0000
Y12=   10.0250=           FAR(9)  -               0.000000 +   10.0000 : Y42=     0.9124=            T(24)  -    T(23)             +     0.0000
Y15=    0.0000=          0.000000 -               0.000000 +    0.0000 : Y43=10864.6328=            XN(1)  *             4.490000 +     0.0000

T 1=  375.0002  X=YCOMPD15 Z=           W=             ID=03/11/91 E=2 : T 3=     0.4280  X=RMAP(14) Z=XNMAP 14 W=            ID=LPT X MN E=1
T 2= 2184.6992  X=  XM      Z=XNMAP  1 W=             ID=BYP AREA E=3 : T 4=     0.9950  X=YCOMPD23 Z=  XM      W=            ID=INLETREC E=1

P 1=YCOMPD41--> HPX(1)  : P 4=YTABLE 4--> DEFF

     --VARY-- ---HI--- ---LO---  (+)   OBJECT = TARGET   (+) LIM
C19= AREA(26)  2817.00  2183.00 1.00  AREA(26) YTABLE 2 0.00 L=1

MODE=  T(10)   PLA=  2708.500  ADDPLA=     0.000  PLA LIMIT= PLA
IDES=0  NVAR=10  MAX ERR= 8= 14.HP+10*WD = 0.00017  MATRX= 0  LOOP= 15
1OMT  LOOPS=  1  MAX ERROR =        0.      = 0.00000

                         B L E E D S    A N D    L E A K A G E S
                         ---------------------------------------
      FR - TO %W(FR)  %W(1)       W     T-R       P        H     DH/DHT :      FR - TO %W(FR)  %W(1)        W     T-R       P        H     DH/DHT
B 3=   3 - 12 0.0520 0.0035    1.120 1047.1   69.043  252.72 0.7000 : B 7=  3 - OB 0.0000 0.0000     0.000   968.3  53.453  233.12 0.6000
B 5=   3 - 17 0.0090 0.0006    0.194  687.5   17.707  164.54 0.2500 : B 9=  3 - OB 0.0343 0.0023     0.739   888.8  40.463  213.53 0.5000
 STA   3 TOTL 0.0953 0.0064    2.052

      FR - TO %W(FR)  %W(1)       W     T-R       P        H     DH/DHT :      FR - TO %W(FR)  %W(1)        W     T-R       P        H     DH/DHT
B 1=   6 -  9 0.0577 0.0035    1.124 1278.9  130.995  311.50 1.0000 : B 6=  6 - 21 0.0000 0.0000     0.000  1278.9 130.995  311.50 1.0000
B 2=   6 - 11 0.0385 0.0023    0.750 1278.9  130.995  373.73 1.0000 : B 8=  6 - OB 0.0038 0.0002     0.074  1278.9 130.995  311.50 1.0000
B 4=   6 - 15 0.0070 0.0004    0.136 1278.9  133.256  311.50 0.2500
 STA   6 TOTL 0.1070 0.0065    2.085

      FR - TO %W(FR)  %W(1)       W     T-R       P        H     DH/DHT
B10=  22 - OB 0.0000 0.0000    0.000  483.6    5.804  115.55 1.0000
 STA  22 TOTL 0.0000 0.0000    0.000

                       C O M P O N E N T    P E R F O R M A N C E
                       ------------------------------------------
  N  ID         BETA      XN       XN-MAP      HP     HPX/PHP  SF(N,2)    W-MAP   EFF-MAP    R-MAP    SMRELL   FLOW ID     EFF ID   MAPTYP
  1 FAN        1.0265  2419.741    96.366   4761.77    23.93   0.0000   944.710   0.8778    1.4702    22.304  QUIETENG   QUIETENG      1
  3 HPC        1.0106 10835.695    98.716   5734.93   100.20   0.0000    85.841   0.8380   21.1949    21.274    0.  0.     0.  0.        1
 10 HPT        0.0000 10835.695   100.116   5835.21    66.04   0.0000     1.000   0.8930    4.0657     6.205  JAN.2690   JAN.2690      1
 14 LPT        0.0000  2419.741    98.269   4786.54     0.00   0.0000     1.000   0.9241    5.1182     6.501  ANALYTIC   ANALYTIC      1
 14 LPT                            RNISF(1,14),(2,14),(3,14),(4,14)=   1.00020  1.00047   1.00000   1.00000

                            N O Z Z L E    P E R F O R M A N C E
                            ------------------------------------
  NOZZLE       (N)  TYP      FG        FN        RJ       CFG       CD     AREA(TH)  V-EXIT  SF(TH,2) SF(EX,2)   CFGT ID     CDT ID   MAPTYP
PRI (8-9)      18    1     1027.05    508.65   1.8042   0.9954   0.9635    294.19   1569.1     0.278    0.000   CFG MDXX   CD  MDXX      1
SEC (18-19)    25    1     9632.21   2384.32   2.0338   0.9962   0.9828   2184.80    985.2     2.118    0.000   CFG MDXX   CD  MDXX      1

                    F I N A L    E N G I N E    P E R F O R M A N C E
                    -------------------------------------------------
  BPR(1) RMIX(1) GAINMX(1) ANGMIX(1)      BPR(2) RMIX(2) GAINMX(2) ANGMIX(2)
 13.9813  1.1272  0.0000    0.0000        0.0000  0.0000  0.0000    0.0000

    FG      FRAM     WFE   FARST   EPR     WAENG    WACOR   RCOA    FNR1   FNGF
 10659.3  7766.3  1566.5 .06775  1.189  322.595 1008.316  30.94   9817. 1.0000

    FN      SFC      WFT    FHV   NODISS   EFFTH    FN/WA  EFFOA   WFTR1  WFTGF
  2893.0  0.5415  1566.5 18550.     0     0.3731  8.9678 0.8491   5771. 1.0000

WARNING: TABLE(S) EXTRAPOLATED.

NPTOT = 48      NP1 = 16      NP2 = 16      NP3 = 16

FMT1
(/,2F10.0,F10.2,2F10.1,3F10.2,/,F10.1,2F10.3,F10.4,2F10.1.      ,        2F10.2
IPUNCH =    412         1      1385       450      1251      1553       827
           1178       734       122       123       530      1287      1257
            797      1148
 NAMES =  CASE       ALT        XM      DTAMB    V-KTAS   YCOMPD15   PAMB
        T-AMB(R)   HPX(3)   BLD(9)   BLD(10)    ERAM      WD(1)    WCOR(1)
           P(1)      T(1)
ASA LOW NOISE MODEL FROM MDXX BPR=14 SHORT DUCT MODEL

        2.     39000.      0.80       0.0     458.9      0.00      2.85    389.97
    100.2      0.034     0.000    0.9950     322.6    1008.3      4.33    440.03


FMT2
(F10.2,4F10.1,F10.2,F10.4,F10.2,/,8F10.2,)
IPUNCH =    314       651       665      1557      1323      1556      1558
            901       895       888      1174      1167        30        23
           1313      1306
 NAMES =  BPR(1)     FG       F-RAM   YCOMPD19    WFT     YCOMPD18 YCOMPD20
          RC-OA     R(25)     R(18)     T(27)     T(20)   AREA(27) AREA(20)
          WD(27)    WD(20)

    13.98    10659.3    7766.3    2812.3    1566.5     80.69    0.5570     30.94
     2.03       1.80    403.54   1123.74   2184.80    294.19    301.06     21.16

FMT3
(2F10.1,F10.2,4F10.4,F10.1/F10.3,F10.1,6F10.0,)
IPUNCH =   1459      1448      1157       413       416       415       418
            698      1578       274      1554      1554      1554      1554
           1554      1554
 NAMES =  XN(14)    XN(3)     T(10)    CD-18    CFG-19    CD-8      CFG-9
          HP(1)   YCOMPD40  BLDP(9)  YCOMPD16 YCOMPD16 YCOMPD16 YCOMPD16
        YCOMPD16 YCOMPD16

   2419.7    10835.7   2708.69    0.9828    0.9962    0.9635    0.9954    4761.8
    0.995       40.5    99999.    99999.    99999.    99999.    99999.    99999.
```

```
TERMAP (VER 12)  TITLE=  NASA LOW NOISE MODEL (FLOW SCALE DOWN OF MDXX BPR=14 SHORT BYP DUCT MODEL)       DATE= 04-09-92 CASE=    1.0
(CMS  04-06-92) STITLE= SEA LEVEL, STATIC, STD, TAKE-OFF, FAN CORR N=85.3 PCT                            TIME= 12:59:30 PAGE=      8

   ALT   PAMB   TAMBF  TAMBR  DTAMB DTAMTP PRELHM  KTAS    KCAS    XM     RPR   DEFF   ERAM    P1     T1R   DEFTIP ERAMTP  PTIP  TTIPR
    0. 14.696  59.00 518.67   0.0    0.0    0.0    0.0     0.0  0.000  0.975 0.9753 0.9753 14.334 518.67 0.0000 0.0000  0.000   0.0

(N) ID    NSI    T-R      P      W-COR      W        R       EFF      FAR      AREA    XMN      PS    THETA  DELTA     H    SF-N,1  (N)
--- --    ---    ---      -      -----      -        -       ---      ---      ----    ---      --    -----  -----     -    ------  ---
 1 FAN     0    518.7   14.334  771.982  752.939  1.2634  0.8308  0.00000     0.0  0.000    0.000  1.000  0.975  123.95  1.0191    1
 2 DELP    0    561.8   18.109   45.778   54.198  0.9931  0.0000  0.00000   384.3  0.206   17.581  1.083  1.232  134.31  0.2349    2
 3 HPC     0    561.8   17.985   46.095   54.199 19.6186  0.8579  0.00000     0.0  0.000    0.000  1.083  1.224  134.31  1.0241    3
 4 COOL    0   1401.7  352.835    3.421   49.966  0.0000  0.0000  0.00000     0.0  0.000    0.000  2.702 24.009  343.35  0.0000    4
 5 DELP    0   1401.7  352.835    3.421   49.966  1.0000  0.0000  0.00000    23.7  0.258  337.413  2.702 24.009  343.35  0.0000    5
 6 DELP    0   1401.7  352.835    3.421   49.966  0.9765  0.0000  0.00000    20.6  0.300  332.140  2.702 24.009  343.35  0.4000    6
 7 HX C    0   1401.7  344.557    3.129   44.620  1.0000  0.0000  0.00000    26.7  0.206  334.811  2.702 23.445  343.35  0.0000    7
 8 BURN    0   1386.2  344.557    3.111   44.620  0.9807  0.9990  0.00000    26.5  0.206  334.799  2.673 23.445  339.30  0.6799    8
 9 COOL    0   2911.5  337.923    4.714   45.754  0.0000  0.0000  0.02542     0.0  0.000    0.000  5.613 22.994  792.45  0.0000    9
10 HPT     0   2829.7  337.923    5.085   48.641  4.8189  0.8987  0.02388     0.0  0.000    0.000  5.274 22.994  765.83  1.0046   10
11 PWRK    0   2056.7   70.126   20.299   48.641  0.0000  0.0000  0.02388     0.0  0.000    0.000  3.965  4.772  535.49  0.0007   11
12 COOL    0   2042.4   70.126   21.028   50.565  0.0000  0.0000  0.02295     0.0  0.000    0.000  3.938  4.772  530.78  0.0000   12
13 DELP    0   1999.2   70.126   21.964   53.383  0.9970  0.0000  0.02171   196.0  0.200   68.318  3.855  4.772  517.57  0.1163   13
14 LPT     0   1999.2   69.916   22.537   53.384  3.8702  0.9275  0.02171     0.0  0.000    0.000  3.754  4.757  517.58  1.0003   14
15 COOL    0   1475.7   18.065   73.253   53.384  0.0000  0.0000  0.02171     0.0  0.000    0.000  2.845  1.229  370.77  0.0000   15
16 DELP    0   1475.2   18.065   73.722   53.734  0.9957  0.0000  0.02156   406.6  0.334   16.779  2.844  1.229  370.59  0.0609   16
17 COOL    0   1475.2   17.987   74.042   53.734  0.0000  0.0000  0.02156     0.0  0.000    0.000  2.844  1.224  370.59  0.0000   17
18 NOZZ    0   1469.4   17.987   74.567   54.222  1.2239  0.0000  0.02137     1.0  0.000    0.000  2.833  1.224  368.93  0.0000   18
19  TH8    0   1395.3   14.696   88.949   54.222  1.2239  0.0000  0.02137   294.2  0.557   14.687  2.691  1.000  349.00  1.0000   19
20  EX9    0   1395.8   14.696   88.949   54.222  1.0000  0.0000  0.02137   294.2  0.557   14.696  2.691  1.000  349.00  0.0000   20
--- --    ---    ---      -      -----      -        -       ---      ---      ----    ---      --    -----  -----     -    ------  ---
21 COOL    0    561.8   18.109  590.190  698.741  0.0000  0.0000  0.00000     0.0  0.000    0.000  1.083  1.232  134.31  0.0000   21
22 DELP    0    561.8   18.109  590.190  698.741  0.9977  0.0000  0.00000  3500.0  0.300   17.013  1.083  1.232  134.31  0.0378   22
23 HX H    0    561.8   18.067  591.546  698.741  1.0000  0.0185  0.00000  3500.0  0.301   16.968  1.083  1.229  134.31  0.0000   23
24 DELP    0    562.9   18.067  592.113  698.741  1.0000  0.0000  0.00000  3500.0  0.301   16.966  1.085  1.229  134.57  0.0000   24
25 NOZZ    0    562.9   18.067  592.113  698.741  1.2294  0.0000  0.00000     1.0  0.000    0.000  1.085  1.229  134.57  0.0000   25
26 TH18    0    530.6   14.696  706.752  698.741  1.2294  0.0000  0.00000  2301.3  0.552   14.698  1.023  1.000  126.82  1.0000   26
27 EX19    0    530.6   14.696  706.752  698.741  1.0000  0.0000  0.00000  2301.3  0.552   14.696  1.023  1.000  126.82  0.0000   27
--- --    ---    ---      -      -----      -        -       ---      ---      ----    ---      --    -----  -----     -    ------  ---

S 1= RC-OA   =    24.6159 : S 2=EMAP(7) =  -15.5009 : S 3= EFF(23)=      0.0185

Y 1=      0.8363= COMP POLY EFF AT STATION  1                         : Y16=99999.0000=          0.000000 -            0.000000 +99999.0000
Y 2=      0.9036= COMP POLY EFF AT STATION  3                         : Y17=     3.3694=           P(25)   -   PS(26)             +     0.0000
Y 3= 2369.9805=            T(10)   -          459.669922 +    0.0000 : Y18=    99.1947=         YCOMPD17 *          29.440002 +     0.0000
Y 4=  230.3369=            H(10)   -    H(11)            +    0.0000 : Y19=15001.4180=            FN     - YCOMPD18            +     0.0000
Y 5=   43.6718=          YCOMPD 4 / THETA 10             +    0.0000 : Y20=     0.2722=           WFE     / YCOMPD19            +     0.0000
Y 6=  146.8101=            H(14)   -    H(15)            +    0.0000 : Y21=    22.7744=           T(1)    **         0.500000 +     0.0000
Y 7=   39.1080=          YCOMPD 6 / THETA 14             +    0.0000 : Y22=     1.5889=         YCOMPD21 /    P(1)             +     0.0000
Y 8=    2.5824=           RNI(14) /            0.379900 +    0.0000 : Y23= 1196.3267=          YCOMPD22 *    WD(1)            +     0.0000
Y 9= 3892.0183=           XNMAP 14 *          42.203995 +    0.0000 : Y39=     0.6235=           V-19    /    V-9              +     0.0000
Y10=    1.9375=           THETA 14 **          0.500000 +    0.0000 : Y40=     0.9950=          0.000000 -            0.000000 +     0.9950
Y11= 7540.8359=          YCOMPD 9 * YCOMPD10             +    0.0000 : Y41=    55.4436=           HP(14)  *            0.005000 +     0.0000
Y12=   10.0254=            FAR(9)  -           0.000000 +   10.0000 : Y42=     1.0784=           T(24)   -    T(23)            +     0.0000
Y15=   50.0000=          50.000000 -           0.000000 +    0.0000 : Y43=10441.1250=           XN(1)   *            4.490000 +     0.0000

T 1= 2629.0000  X=YCOMPD15 Z=          W=         ID=03/11/91 E=1  : T 3=     0.3075  X=RMAP(14) Z=XNMAP 14 W=         ID=LPT X MN E=1
T 2= 2301.2754  X=  XM       Z=XNMAP  1 W=         ID=BYP AREA E=3  : T 4=     0.9753  X=YCOMPD23 Z=  XM      W=         ID=INLETREC E=1

P 1=YCOMPD41--> HPX(1)  : P 4=YTABLE 4--> DEFF

     --VARY-- ---HI--- ---LO---  (+)   OBJECT = TARGET   (+) LIM
C19= AREA(26)  2817.00  2183.00 1.00  AREA(26) YTABLE 2 0.00 L=1

MODE=XNMAP  1  PLA=    85.300  ADDPLA=     0.000  PLA LIMIT= PLA
IDES=0  NVAR=10  MAX ERR# 9= 19.PS+A/P+A = 0.00031  MATRX= 0  LOOP= 18
IOMT  LOOPS=  1  MAX ERROR = YCOM39.      = 0.00001

                    B L E E D S    A N D    L E A K A G E S
                    ---------------------------------------
      FR - TO %W(FR)  %W(1)      W     T-R     P       H    DH/DHT :       FR - TO %W(FR)  %W(1)      W     T-R     P       H    DH/DHT
B 3=   3 - 12 0.0520 0.0037   2.818 1158.0 186.125  280.64 0.7000 : B 7=   3 - 08 0.0000 0.0000   0.000 1075.1 145.612  259.73 0.6000
B 5=   3 - 17 0.0090 0.0006   0.488  778.4  50.996  186.57 0.2500 : B 9=   3 - 08 0.0171 0.0012   0.927  991.3 111.594  238.83 0.5000
 STA   3 TOTL 0.0781 0.0056   4.233

      FR - TO %W(FR)  %W(1)      W     T-R     P       H    DH/DHT :       FR - TO %W(FR)  %W(1)      W     T-R     P       H    DH/DHT
B 1=   6 -  9 0.0577 0.0038   2.883 1401.7 344.557  343.35 1.0000 : B 6=   6 - 21 0.0000 0.0000   0.000 1401.7 344.557  343.35 1.0000
B 2=   6 - 11 0.0385 0.0026   1.924 1401.7 344.557  411.62 1.0000 : B 8=   6 - 08 0.0038 0.0003   0.190 1401.7 344.557  343.35 1.0000
B 4=   6 - 15 0.0070 0.0005   0.350 1401.7 350.766  343.35 0.2500
 STA   6 TOTL 0.1070 0.0071   5.346

      FR - TO %W(FR)  %W(1)      W     T-R     P       H    DH/DHT
B10=  22 - 08 0.0000 0.0000   0.000  561.8  18.067  134.31 1.0000
 STA  22 TOTL 0.0000 0.0000   0.000

                   C O M P O N E N T    P E R F O R M A N C E
                   -------------------------------------------
  N  ID       BETA       XN       XN-MAP      HP     HPX/PHP  SF(N,2)    W-MAP  EFF-MAP    R-MAP   SMRELL   FLOW ID    EFF ID   MAPTYP
  1 FAN     0.7560  2325.418    85.300  11031.50    55.44   0.0000   723.285   0.8153   1.3587   11.474  QUIETENG  QUIETENG     1
  3 HPC     1.0153 11349.922    95.932  15534.68   127.10   0.0000    74.745   0.8377  17.9270   21.644    0.  0.     0.  0.      1
 10 HPT     0.0000 11349.922   102.643  15665.91   185.82   0.0000     0.999   0.8946   4.0591    6.279  JAN.2690  JAN.2690     1
 14 LPT     0.0000  2325.418    92.219  11088.72     0.00   0.0000     0.997   0.9209   3.8702    6.322  ANALYTIC  ANALYTIC     1
 14 LPT                        RNISF(1,14),(2,14),(3,14),(4,14)=   1.00250  1.00688  1.00000  1.00000

                     N O Z Z L E    P E R F O R M A N C E
                     -------------------------------------
  NOZZLE       (N)  TYP      FG        FN        RJ      CFG      CD    AREA(TH)  V-EXIT  SF(TH,2) SF(EX,2)   CFGT ID    CDT ID   MAPTYP
PRI (8-9)      18    1    1671.44   1671.44   1.2239  0.9927  0.9359    294.19   999.1    0.267    0.000   CFG MDXX  CD  MDXX     1
SEC (18-19)    25    1   13429.18  13429.18   1.2294  0.9928  0.9389   2301.27   622.9    2.090    0.000   CFG MDXX  CD  MDXX     1

                 F I N A L    E N G I N E    P E R F O R M A N C E
                 -------------------------------------------------
 BPR(1) RMIX(1) GAINMX(1) ANGMIX(1)     BPR(2) RMIX(2) GAINMX(2) ANGMIX(2)
12.8925  1.0045  0.0000    0.0000       0.0000  0.0000  0.0000    0.0000

    FG       FRAM     WFE   FARST   EPR    WAENG    WACOR   RCOA    FNR1    FNGF
 15100.6      0.0  4082.9 .06775  1.255  752.939  771.982  24.62  15483.  1.0000

    FN       SFC      WFT    FHV   NODISS   EFFTH    FN/WA  EFFOA   WFTR1   WFTGF
 15100.6  0.2704  4082.9 18550.     0     0.3087  20.0555 0.8437   4186.  1.0000

WARNING: TABLE(S) EXTRAPOLATED.

NPTOT = 48      NP1 = 16      NP2 = 16      NP3 = 16

FMT1
(/,2F10.0,F10.2,2F10.1,3F10.2,/,F10.1,2F10.3,F10.4,2F10.1,     .             2F10.2
IPUNCH =    412          1       1385        450       1251       1553        827
           1178        734        122        123        530       1287       1257
            797       1148
 NAMES =  CASE       ALT          XM       DTAMB     V-KTAS   YCOMPD15   PAMB
        T-AMB(R)   HPX(3)    BLD(9)    BLD(10)     ERAM       WD(1)    WCOR(1)
           P(1)      T(1)


         1.          0.        0.00        0.0        0.0      50.00      14.70      518.67
      127.1       0.017       0.000     0.9753      752.9      772.0      14.33      518.67


FMT2
(F10.2,4F10.1,F10.2,F10.4,F10.2,/,8F10.2,)
IPUNCH =    314        651        665       1557       1323       1556       1558
            901        855        888       1174       1167         30         23
           1313       1306
 NAMES =  BPR(1)      FG        F-RAM    YCOMPD19    WFT      YCOMPD18  YCOMPD20
          RC-OA      R(25)      R(18)      T(27)      T(20)   AREA(27)  AREA(20)
          WD(27)     WD(20)

      12.89     15100.6         0.0    15001.4     4082.9      99.19     0.2722      24.62
       1.23        1.22      530.63    1395.79    2301.27     294.19     698.74      54.22

FMT3
(2F10.1,F10.2,4F10.4,F10.1/F10.3,F10.1,6F10.0,)
IPUNCH =   1459       1448       1157        413        416        415        418
            698       1578        274       1554       1554       1554       1554
           1554       1554
 NAMES =  XN(14)     XN(3)      T(10)     CD-18     CFG-19     CD-8      CFG-9
           HP(1)    YCOMPD40   BLDP(9)   YCOMPD16  YCOMPD16  YCOMPD16  YCOMPD16
        YCOMPD16  YCOMPD16

     2325.4     11349.9     2829.65     0.9389     0.9928     0.9359     0.9927    11031.5
      0.995       111.6     99999.     99999.     99999.     99999.     99999.     99999.
```

```
TERMAP (VER 12)  TITLE=  NASA LOW NOISE MODEL (FLOW SCALE DOWN OF MDXX BPR=14 SHORT BYP DUCT MODEL)       DATE= 04-09-92 CASE=    2.0
(CMS  04-06-92) STITLE= 3000 FT. 0.25 MN. ISA, MAX CLIMB (RIT=2355 F)                                     TIME= 12:59:30 PAGE=      9

   ALT   PAMB    TAMBF  TAMBR   DTAMB DTAMTP PRELHM  KTAS    KCAS    XM      RPR   DEFF    ERAM     P1     T1R    DEFTIP ERAMTP   PTIP  TTIPR
 3000. 13.171   48.30 507.97     0.0    0.0    0.0  163.7   156.6  0.250  1.039 0.9950 0.9950 13.688 514.33 0.0000 0.0000  0.000    0.0

(N) ID      NSI     T-R       P        W-COR       W        R        EFF       FAR        AREA    XMN      PS      THETA   DELTA     H       SF-N.)   (N)
--- --      ---     ---       -        -----       -        -        ---       ---        ----    ---      --      -----   -----     -       ------   ---
 1 FAN       0     514.3    13.688   830.389   776.672   1.2634   0.8725   0.00000      0.0   0.000    0.000   0.992   0.931   122.91   1.0191     1
 2 DELP      0     555.1    17.293    46.336    52.705   0.9930   0.0000   0.00000    384.3   0.209   16.776   1.070   1.177   132.69   0.2349     2
 3 HPC       0     555.1    17.172    46.670    52.712  19.5977   0.8578   0.00000      0.0   0.000    0.000   1.070   1.168   132.69   1.0241     3
 4 COOL      0    1386.2   336.531     3.413    47.605   0.0000   0.0000   0.00000      0.0   0.000    0.000   2.673  22.899   339.32   0.0000     4
 5 DELP      0    1386.2   336.531     3.413    47.805   1.0000   0.0000   0.00000     23.7   0.257  321.897   2.673  22.899   339.32   0.0000     5
 6 DELP      0    1386.2   336.531     3.413    47.805   0.9767   0.0000   0.00000     20.6   0.299  316.897   2.673  22.899   339.32   0.4000     6
 7 HX C      0    1386.2   328.677     3.121    42.690   1.0000   0.0000   0.00000     26.7   0.206  319.429   2.673  22.365   339.32   0.0000     7
 8 BURN      0    1370.9   328.677     3.103    42.690   0.9808   0.9990   0.00000     26.5   0.206  319.419   2.643  22.365   335.33   0.6799     8
 9 COOL      0    2897.0   322.382     4.716    43.773   0.0000   0.0000   0.02536      0.0   0.000    0.000   5.585  21.937   787.98   0.0000     9
10 HPT       0    2815.2   322.382     5.086    46.530   4.8252   0.8986   0.02384      0.0   0.000    0.000   5.248  21.937   761.39   1.0046    10
11 PWRK      0    2045.2    66.812    20.324    46.550   0.0000   0.0000   0.02384      0.0   0.000    0.000   3.943   4.546   532.12   0.0007    11
12 COOL      0    2030.7    66.812    21.052    48.370   0.0000   0.0000   0.02291      0.0   0.000    0.000   3.915   4.546   527.36   0.0000    12
13 DELP      0    1986.7    66.812    22.004    51.111   0.9970   0.0000   0.02166    196.0   0.200   65.083   3.830   4.546   513.95   0.1163    13
14 LPT       0    1986.7    66.611    22.575    51.112   4.0226   0.9276   0.02166      0.0   0.000    0.000   3.731   4.533   513.95   1.0003    14
15 COOL      0    1453.1    16.559    75.924    51.112   0.0000   0.0000   0.02166      0.0   0.000    0.000   2.802   1.127   364.60   0.0000    15
16 DELP      0    1452.7    16.559    76.410    51.446   0.9953   0.0000   0.02151    406.6   0.348   15.284   2.801   1.127   364.43   0.0609    16
17 COOL      0    1452.7    16.482    76.770    51.446   0.0000   0.0000   0.02151      0.0   0.000    0.000   2.801   1.121   364.43   0.0000    17
18 NOZZ      0    1446.9    16.482    77.323    51.921   1.2513   0.0000   0.02131      1.0   0.000    0.000   2.790   1.121   362.79   0.0000    18
19  TH8      0    1366.4    13.171    94.030    51.921   1.2513   0.0000   0.02131    294.2   0.587   13.181   2.635   0.896   341.09   1.0000    19
20  EX9      0    1366.4    13.171    94.030    51.921   1.0000   0.0000   0.02131    294.2   0.587   13.171   2.635   0.896   341.09   0.0000    20
--- --      ---     ---       -        -----       -        -        ---       ---        ----    ---      --      -----   -----     -       ------   ---
21 COOL      0     555.1    17.293   636.479   723.967   0.0000   0.0000   0.00000      0.0   0.000    0.000   1.070   1.177   132.69   0.0000    21
22 DELP      0     555.1    17.293   636.479   723.967   0.9973   0.0000   0.00000   3500.0   0.327   16.061   1.070   1.177   132.69   0.0378    22
23 HX H      0     555.1    17.247   638.201   723.967   1.0000   0.0185   0.00000   3500.0   0.328   16.010   1.070   1.174   132.69   0.0000    23
24 DELP      0     556.1    17.247   638.766   723.967   1.0000   0.0000   0.00000   3500.0   0.328   16.008   1.072   1.174   132.93   0.0000    24
25 NOZZ      0     556.1    17.247   638.766   723.967   1.3094   0.0000   0.00000      1.0   0.000    0.000   1.072   1.174   132.93   0.0000    25
26 TH18      0     514.8    13.171   804.771   723.967   1.3094   0.0000   0.00000   2271.6   0.633   13.170   0.993   0.896   123.03   1.0000    26
27 EX19      0     514.8    13.171   804.771   723.967   1.0000   0.0000   0.00000   2271.6   0.633   13.171   0.993   0.896   123.03   0.0000    27
--- --      ---     ---       -        -----       -        -        ---       ---        ----    ---      --      -----   -----     -       ------   ---

S 1= RC-OA   =    24.5861 : S 2=EMAP(7) =   -15.3311 : S 3= EFF(23)=      0.0185

Y 1=      0.8767= COMP POLY EFF AT STATION  1                          : Y16=99999.0000=           0.000000 -               0.000000 +99999.0000
Y 2=      0.9036= COMP POLY EFF AT STATION  3                          : Y17=     4.0763=            P(25)   -   PS(26)               +      0.0000
Y 3= 2355.4978=             T(10)   -           459.669922 +    0.0000 : Y18=   120.0072=          YCOMPD17 *           29.440002 +      0.0000
Y 4=  229.2676=             H(10)   -     H(11)                +    0.0000 : Y19=10617.4961=            FN      - YCOMPD18              +      0.0000
Y 5=   43.6898=           YCOMPD 4 / THETA 10                  +    0.0000 : Y20=     0.3674=           WFE     / YCOMPD19              +      0.0000
Y 6=  149.3564=             H(14)   -     H(15)                +    0.0000 : Y21=    22.6789=            T(1)    **            0.500000 +      0.0000
Y 7=   40.0313=           YCOMPD 6 / THETA 14                  +    0.0000 : Y22=     1.6569=          YCOMPD21 /    P(1)                 +      0.0000
Y 8=    2.4772=             RNI(14) /               0.379900 +    0.0000 : Y23=  1286.8386=          YCOMPD22 *   WD(1)                 +      0.0000
Y 9= 3891.8340=           XNMAP 14 *               42.203995 +    0.0000 : Y39=     0.6755=            V-19    /   V-9                  +      0.0000
Y10=      1.9316=           THETA 14 **              0.500000 +    0.0000 : Y40=     0.9950=          0.000000 -              0.000000 +      0.9950
Y11= 7517.3789=           YCOMPD 9 * YCOMPD10                  +    0.0000 : Y41=    54.0038=            HP(14)  *              0.005000 +      0.0000
Y12=     10.0254=             FAR(9)  -                0.000000 +   10.0000 : Y42=     0.9836=            T(24)   -    T(23)                +      0.0000
Y15=     50.0000=          50.000000 -                0.000000 +    0.0000 : Y43=10408.6484=            XN(1)   *              4.490000 +      0.0000

T 1= 2629.0000  X=YCOMPD15 Z=            W=            ID=03/11/91 E=1 : T 3=      0.3204  X=RMAP(14) Z=XNMAP 14 W=            ID=LPT X MN E=1
T 2= 2271.5317  X=  XM      Z=XNMAP   1 W=            ID=BYP AREA E=3 : T 4=      0.9950  X=YCOMPD23 Z=   XM      W=            ID=INLETREC E=1

P 1=YCOMPD41--> HPX(1)   : P 4=YTABLE 4--> DEFF

     --VARY-- ---HI--- ---LO---  (+)   OBJECT = TARGET   (+) LIM
C19= AREA(26)  2817.00  2183.00 1.00  AREA(26) YTABLE 2 0.00 L=1

MODE=  T(10)    PLA=  2815.000  ADDPLA=      0.000  PLA LIMIT= PLA
IDES=0  NVAR=10  MAX ERR= 9= 19.PS+A/P+A = 0.00037  MATRX= 0  LOOP= 16
IOMT  LOOPS=  1  MAX ERROR =          0.      = 0.00000

                   B L E E D S     A N D     L E A K A G E S
                   -----------------------------------------
      FR - TO %W(FR)  %W(1)       W     T-R      P        H    DH/DHT :        FR - TO %W(FR)  %W(1)        W     T-R      P        H    DH/DHT
B 3=   3 - 12 0.0520 0.0035    2.741 1144.9 177.577  277.33 0.7000 : B 7=   3 - OB 0.0000 0.0000     0.000 1062.9 138.939  256.67 0.6000
B 5=   3 - 17 0.0090 0.0006    0.474  769.3  48.679  184.35 0.2500 : B 9=   3 - OB 0.0321 0.0022     1.692  979.9 106.492  236.01 0.5000
 STA   3 TOTL 0.0931 0.0063    4.908

      FR - TO %W(FR)  %W(1)       W     T-R      P        H    DH/DHT :        FR - TO %W(FR)  %W(1)        W     T-R      P        H    DH/DHT
B 1=   6 -  9 0.0577 0.0036    2.758 1386.2 328.677  339.32 1.0000 : B 6=   6 - 21 0.0000 0.0000     0.000 1386.2 328.677  339.32 1.0000
B 2=   6 - 11 0.0385 0.0024    1.840 1386.2 328.677  407.05 1.0000 : B 8=   6 - OB 0.0038 0.0002     0.182 1386.2 328.677  339.32 1.0000
B 4=   6 - 15 0.0070 0.0004    0.335 1386.2 334.567  339.32 0.2500
 STA   6 TOTL 0.1070 0.0066    5.115

      FR - TO %W(FR)  %W(1)       W     T-R      P        H    DH/DHT
B10=  22 - OB 0.0000 0.0000    0.000  555.1  17.247  132.69 1.0000
 STA  22 TOTL 0.0000 0.0000    0.000

                   C O M P O N E N T     P E R F O R M A N C E
                   -------------------------------------------
  N  ID        BETA       XN       XN-MAP      HP      HPX/PHP  SF(N,2)    W-MAP   EFF-MAP    R-MAP    SMRELL    FLOW ID     EFF ID   MAPTYP
  1 FAN      0.8555  2318.185    85.393  10746.11    54.00   0.0000   778.007   0.8562   1.3587    19.797   QUIETENG   QUIETENG      1
  3 HPC      1.0281 11304.320    96.124  14818.59   100.20   0.0000    75.678   0.8376  17.9080    23.552    0.   0.     0.   0.      1
 10 HPT      0.0000 11304.320   102.490  14917.01   176.36   0.0000     0.999   0.8945   4.0643     6.274   JAN.2690   JAN.2690      1
 14 LPT      0.0000  2318.185    92.215  10800.75     0.00   0.0000     0.998   0.9211   4.0226     6.322   ANALYTIC   ANALYTIC      1
 14 LPT                        RNISF(1,14),(2,14),(3,14),(4,14)=  1.00250  1.00684  1.00000  1.00000

                   N O Z Z L E     P E R F C F M A N C E
                   -------------------------------------
 NOZZLE        (N)  TYP      FG        FN        RJ      CFG       CD      AREA(TH)  V-EXIT  SF(TH,2) SF(EX,2)   CFGT ID      CDT ID   MAPTYP
PRI (8-9)      18    1    1670.08   1217.53   1.2513  0.9929   0.9370     294.19   1042.3     0.337    0.000   CFG MDXX   CD  MDXX      1
SEC (18-19)    25    1   15736.23   9519.97   1.3094  0.9932   0.9438    2271.55    704.1     2.615    0.000   CFG MDXX   CD  MDXX      1

                F I N A L     E N G I N E     P E R F O R M A N C E
                ---------------------------------------------------
 BPR(1) RMIX(1) GAINMX(1) ANGMIX(1)     BPR(2) RMIX(2) GAINMX(2) ANGMIX(2)
13.7363  1.0464  0.0000    0.0000       0.0000  0.0000  0.0000    0.0000

   FG       FRAM     WFE    FARST    EPR     WAENG     WACOR    RCOA    FNR1    FNGF
17406.3   6668.8  3900.5  .06775   1.204   776.672  830.389   24.59  11528.  1.0000

   FN       SFC      WFT     FHV    NODISS    EFFTH     FN/WA   EFFOA   WFTR1   WFTGF
10737.5   0.3633  3900.5  18550.     0       0.3538   13.8250  0.8481   4205.  1.0000

WARNING: TABLE(S) EXTRAPOLATED.

NPTOT = 48      NP1 = 16      NP2 = 16      NP3 = 16

FMT1
(/,2F10.0,F10.2,2F10.1,3F10.2,/,F10.1,2F10.3,F10.4,2F10.1,        ,            2F10.2
IPUNCH =    412          1       1385       450       1251      1553       827
           1178        734        122       123        530      1287      1257
            797       1148
 NAMES =  CASE       ALT         XM       DTAMB      V-KTAS   YCOMPD15   PAMB
          T-AMB(R)   HPX(3)   BLD(9)    BLD(10)     ERAM       WD(1)   WCOR(1)
           P(1)       T(1)


       2.       3000.       0.25        0.0       163.7       50.00      13.17      507.97
   100.2       0.032      0.000     0.9950       776.7       830.4      13.69      514.33


FMT2
(F10.2,4F10.1,F10.2,F10.4,F10.2,/,8F10.2,)
IPUNCH =    314        651        665       1557       1323       1556       1558
            901        895        888       1174       1167         30         23
           1313       1306
 NAMES =  BPR(1)       FG        F-RAM    YCOMPD19    WFT       YCOMPD18  YCOMPD20
          RC-OA       R(25)      R(18)      T(27)      T(20)    AREA(27)  AREA(20)
          WD(27)     WD(20)

   13.74    17406.3     6668.8    10617.5     3900.5     120.01     0.3674      24.59
    1.31       1.25     514.81    1366.44    2271.55     294.19     723.97      51.92

FMT3
(2F10.1,F10.2,4F10.4,F10.1/F10.3,F10.1,6F10.0,)
IPUNCH =   1459       1448       1157        413        416        415        418
            698       1578        274       1554       1554       1554       1554
           1554       1554
 NAMES =  XN(14)     XN(3)      T(10)     CD-18      CFG-19     CD-8       CFG-9
          HP(1)    YCOMPD40  BLDP(9)   YCOMPD16  YCOMPD16  YCOMPD16  YCOMPD16
        YCOMPD16  YCOMPD16

   2318.2    11304.3    2815.17     0.9438     0.9932     0.9370     0.9929    10746.1
    0.995      106.5     99999.     99999.     99999.     99999.     99999.     99999.
```

```
TERMAP (VER 12)  TITLE=  NASA LOW NOISE MODEL (FLOW SCALE DOWN OF MDXX BPR=14 SHORT BYP DUCT MODEL)        DATE= 04-09-92 CASE=    3.0
(CMS  04-06-92) STITLE= 394 FT, 0.20 MN, ISA, INCREASED APPROACH POWER (FN=3000 LBF)                       TIME= 12:59:30 PAGE=     10

   ALT    PAMB    TAMBF  TAMBR  DTAMB DTAMTP PRELHM  KTAS    KCAS    XM      RPR   DEFF    ERAM     P1     T1R   DEFTIP ERAMTP   PTIP  TTIPR
  394. 14.488   57.59 517.26    0.0    0.0    0.0  132.1   131.3  0.200  1.023 0.9950 0.9950 14.823 521.41 0.0000 0.0000  0.000    0.0

(N) ID   NSI     T-R       P      W-COR      W        R       EFF      FAR     AREA    XMN      PS    THETA  DELTA      H   SF-N.1  (N)
--- --   ---     ---       -      -----      -        -       ---      ---     ----    ---      --    -----  -----      -   ------  ---
 1 FAN     0    521.4   14.823  538.053  541.282  1.0717  0.8512  0.00000     0.0  0.000    0.000  1.005  1.009  124.61  1.0191    1
 2 DELP    0    533.7   15.886   25.980   27.686  0.9978  0.0000  0.00000   384.3  0.115   15.740  1.029  1.081  127.55  0.2349    2
 3 HPC     0    533.7   15.852   26.036   27.687  9.5385  0.8017  0.00000     0.0  0.000    0.000  1.029  1.079  127.55  1.0241    3
 4 COOL    0   1122.4  151.205    3.590   25.109  0.0000  0.0000  0.00000     0.0  0.000    0.000  2.164 10.289  271.64  0.0000    4
 5 DELP    0   1122.4  151.205    3.590   25.109  1.0000  0.0000  0.00000    23.7  0.270  143.893  2.164 10.289  271.64  0.0000    5
 6 DELP    0   1122.4  151.205    3.590   25.109  0.9740  0.0000  0.00000    20.6  0.314  141.375  2.164 10.289  271.64  0.4000    6
 7 HX C    0   1122.4  147.273    3.292   22.423  1.0000  0.0000  0.00000    26.7  0.216  142.647  2.164 10.021  271.64  0.0000    7
 8 BURN    0   1111.6  147.273    3.276   22.423  0.9786  0.9990  0.00000    26.5  0.216  142.635  2.143 10.021  268.90  0.6799    8
 9 COOL    0   2149.9  144.120    4.729   22.779  0.0000  0.0000  0.01588     0.0  0.000    0.000  4.145  9.807  557.35  0.0000    9
10 HPT     0   2092.7  144.120    5.074   24.228  4.5437  0.8994  0.01492     0.0  0.000    0.000  3.930  9.807  540.26  1.0046   10
11 PWRK    0   1507.4   31.719   19.137   24.228  0.0000  0.0000  0.01492     0.0  0.000    0.000  2.906  2.158  376.86  0.0007   11
12 COOL    0   1500.8   31.719   19.857   25.195  0.0000  0.0000  0.01434     0.0  0.000    0.000  2.894  2.158  374.87  0.0000   12
13 DELP    0   1472.5   31.719   20.792   26.634  0.9973  0.0000  0.01355   196.0  0.186   30.989  2.839  2.158  366.95  0.1163   13
14 LPT     0   1472.5   31.634   21.160   26.634  2.0804  0.8906  0.01355     0.0  0.000    0.000  2.791  2.153  366.93  1.0003   14
15 COOL    0   1246.1   15.206   39.900   26.634  0.0000  0.0000  0.01355     0.0  0.000    0.000  2.403  1.035  306.92  0.0000   15
16 DELP    0   1245.4   15.206   40.150   26.810  0.9988  0.0000  0.01346   406.6  0.172   14.904  2.401  1.035  306.69  0.0609   16
17 COOL    0   1245.4   15.187   40.199   26.310  0.0000  0.0000  0.01346     0.0  0.000    0.000  2.401  1.033  306.68  0.0000   17
18 NOZZ  110   1240.4   15.187   40.492   27.059  1.0483  0.0000  0.01334     1.0  0.000    0.000  2.392  1.033  305.37  0.0000   18
19  TH8    0   1225.1   14.488   42.184   27.059  1.0483  0.0000  0.01334   294.2  0.265   14.499  2.362  0.986  301.37  1.0000   19
20  EX9    0   1225.1   14.488   42.184   27.059  1.0000  0.0000  0.01334   294.2  0.265   14.488  2.362  0.986  301.37  0.0000   20
--- --   ---     ---       -      -----      -        -       ---      ---     ----    ---      --    -----  -----      -   ------  ---
21 COOL    0    533.7   15.886  481.931  513.595  0.0000  0.0000  0.00000     0.0  0.000    0.000  1.029  1.081  127.55  0.0000   21
22 DELP    0    533.7   15.886  481.932  513.595  0.9985  0.0000  0.00000  3500.0  0.240   15.260  1.029  1.081  127.55  0.0378   22
23 HX H    0    533.7   15.863  482.652  513.595  1.0000  0.0185  0.00000  3500.0  0.241   15.236  1.029  1.079  127.55  0.0000   23
24 DELP    0    534.2   15.863  482.877  513.595  1.0000  0.0000  0.00000  3500.0  0.241   15.235  1.030  1.079  127.67  0.0000   24
25 NOZZ  110    534.2   15.863  482.877  513.595  1.0949  0.0000  0.00000     1.0  0.000    0.000  1.030  1.079  127.67  0.0000   25
26 TH18    0    520.5   14.488  521.879  513.595  1.0949  0.0000  0.00000  2608.4  0.362   14.488  1.003  0.986  124.39  1.0000   26
27 EX19    0    520.5   14.488  521.879  513.595  1.0000  0.0000  0.00000  2608.4  0.362   14.488  1.003  0.986  124.39  0.0000   27
--- --   ---     ---       -      -----      -        -       ---      ---     ----    ---      --    -----  -----      -   ------  ---

S 1= RC-OA   =    10.2005 : S 2=EMAP(7) =  -10.8403 : S 3= EFF(23)=     0.0185

Y 1=      0.8527= COMP POLY EFF AT STATION  1                              : Y16=99999.0000=          0.000000 -             0.000000 +99999.0000
Y 2=      0.8530= COMP POLY EFF AT STATION  3                              : Y17=     1.3745=          P(25)   -   PS(26)              +     0.0000
Y 3= 1633.0630=             T(10)   -          459.669922 +      0.0000 : Y18=    40.4666=        YCOMPD17 *              29.440002 +     0.0000
Y 4=  163.4026=             H(10)   -    H(11)               +      0.0000 : Y19= 2999.8728=          FN     - YCOMPD18                +     0.0000
Y 5=   41.5741=          YCOMPD 4 / THETA 10                 +      0.0000 : Y20=     0.4274=         WFE     / YCOMPD19                +     0.0000
Y 6=   60.0132=             H(14)   -    H(15)               +      0.0000 : Y21=    22.8344=          T(1)   **              0.500000 +     0.0000
Y 7=   21.5061=          YCOMPD 6 / THETA 14                 +      0.0000 : Y22=     1.5404=       YCOMPD21 /    P(1)                +     0.0000
Y 8=    1.6377=            RNI(14) /              0.379900 +      0.0000 : Y23=   833.8096=       YCOMPD22 *    WD(1)               +-    0.0000
Y 9= 2632.3589=          XNMAP 14 *             42.203995 +      0.0000 : Y39=     0.9065=         V-19    /    V-9                 +     0.0000
Y10=    1.6705=          THETA 14 **             0.500000 +      0.0000 : Y40=     0.9950=       0.000000 -              0.000000 +     0.9950
Y11= 4397.3086=          YCOMPD 9 * YCOMPD10                +      0.0000 : Y41=    11.3074=        HP(14)   *              0.005000 +     0.0000
Y12=   10.0159=            FAR(9)  -              0.000000 +     10.0000 : Y42=     0.4998=          T(24)   -    T(23)               +     0.0000
Y15=   50.0000=         50.000000 -              0.000000 +      0.0000 : Y43= 6088.5625=          XN(1)   *              4.490000 +     0.0000

T 1= 2629.0000   X=YCOMPD15 Z=            W=          ID=03/11/91 E=1 : T 3=     0.1382  X=RMAP(14) Z=XNMAP 14 W=          ID=LPT X MN E=1
T 2= 2608.3855   X=   XM      Z=XNMAP   1 W=          ID=BYP AREA E=1 : T 4=     0.9950  X=YCOMPD23 Z=   XM      W=          ID=INLETREC E=1

P 1=YCOMPD41--> HPX(1)   : P 4=YTABLE 4--> DEFF

    --VARY-- ---HI--- ---LO---  (+)   OBJECT = TARGET    (+) LIM
C19= AREA(26)  2817.00  2183.00 1.00  AREA(26) YTABLE 2 0.00 L=1

MODE=YCOMPD19  PLA=  3000.000  ADDPLA=     0.000  PLA LIMIT= PLA
IDES=0  NVAR=10  MAX ERR# 9= 19.PS+A/P+A = 0.00039  MATRX= 1  LOOP= 16
IOMT  LOOPS=  1  MAX ERROR =        0.       = 0.00000

                        B L E E D S     A N D     L E A K A G E S
                        ---------------------------------------------
     FR - TO %W(FR)  %W(1)       W     T-R      P       H    DH/DHT :       FR - TO %W(FR)  %W(1)       W     T-R      P       H   DH/DHT
B 3=  3 - 12 0.0520 0.0027    1.440  949.3  90.157  228.41 0.7000 : B 7=  3 - OB 0.0000 0.0000    0.000  890.8  74.229  214.00 0.6000
B 5=  3 - 17 0.0090 0.0005    0.249  683.4  33.295  163.57 0.2500 : B 9=  3 - OB 0.0321 0.0016    0.889  831.9  60.292  199.59 0.5000
 STA  3 TOTL 0.0931 0.0048    2.578

     FR - TO %W(FR)  %W(1)       W     T-R      P       H    DH/DHT :       FR - TO %W(FR)  %W(1)       W     T-R      P       H   DH/DHT
B 1=  6 -  9 0.0577 0.0027    1.449 1122.4 147.273  271.64 1.0000 : B 6=  6 - 21 0.0000 0.0000    0.000 1122.4 147.273  271.64 1.0000
B 2=  6 - 11 0.0385 0.0018    0.967 1122.4 147.273  324.95 1.0000 : B 8=  6 - OB 0.0038 0.0002    0.095 1122.4 147.273  271.64 1.0000
B 4=  6 - 15 0.0070 0.0003    0.176 1122.4 150.222  271.64 0.2500
 STA  6 TOTL 0.1070 0.0050    2.687

     FR - TO %W(FR)  %W(1)       W     T-R      P       H    DH/DHT
B10= 22 - OB 0.0000 0.0000    0.000  533.7  15.863  127.55 1.0000
 STA 22 TOTL 0.0000 0.0000    0.000

                       C O M P O N E N T     P E R F O R M A N C E
                       ---------------------------------------------
  N  ID       BETA        XN      XN-MAP       HP     HPX/PHP  SF(N,2)     W-MAP  EFF-MAP    R-MAP   SMRELL   FLOW ID     EFF ID   MAPTYP
  1 FAN     0.9891  1356.028     49.611   2249.69     11.31    0.0000   504.112   0.8353   1.0977   43.406  QUIETENG   QUIETENG       1
  3 HPC     1.0352 10029.875     86.984   5427.64    100.20    0.0000    42.219   0.7829   8.7627   31.593   0.  0.     0.  0.        1
 10 HPT     0.0000 10029.875    105.074   5523.32     72.92    0.0000     0.997   0.8953   3.8387    6.349  JAN.2690   JAN.2690       1
 14 LPT     0.0000  1356.028     62.372   2261.48      0.00    0.0000     0.936   0.8855   2.0804    5.254  ANALYTIC   ANALYTIC       1 ,
 14 LPT                         RNISF(1,14),(2,14),(3,14),(4,14)=  1.00224  1.00560  1.00000  1.00000

                            N O Z Z L E     P E R F O R M A N C E
                            -----------------------------------------
  NOZZLE      (N)  TYP       FG        FN       RJ      CFG      CD    AREA(TH)  V-EXIT  SF(TH,2) SF(EX,2)   CFGT ID     CDT ID   MAPTYP
PRI (8-9)     18    1     373.00    181.09   1.0483  0.9919  0.9276    294.19    447.1     1.293    0.000   CFG MDXX   CD  MDXX      1
SEC (18-19)   25    1    6419.32   2859.25   1.0949  0.9921  0.9310   2608.39    405.3    11.496    0.000   CFG MDXX   CD  MDXX      1
                      F I N A L     E N G I N E     P E R F O R M A N C E
                      -----------------------------------------------------
  BPR(1) RMIX(1) GAINMX(1) ANGMIX(1)     BPR(2) RMIX(2) GAINMX(2) ANGMIX(2)
 18.5504  1.0445  0.0000     0.0000      0.0000  0.0000  0.0000     0.0000

    FG     FRAM     WFE   FARST   EPR     WAENG    WACOR   RCOA    FNR1   FNGF
 6792.3  3752.0  1282.3 .06775  1.025  541.282  538.053  10.20   3014. 1.0000

    FN      SFC     WFT    FHV   NODISS   EFFTH    FN/WA  EFFOA   WFTR1  WFTGF
 3040.3  0.4217  1282.3 18550.    0     0.1900   5.6169 0.7991   1268. 1.0000

WARNING: NON-ZERO NSI(S).

NPTOT = 48      NP1 = 16      NP2 = 16      NP3 = 16

FMT1
(/,2F10.0,F10.2,2F10.1,3F10.2,/,F10.1,2F10.3,F10.4,2F10.1,      ,           2F10.2
IPUNCH =    412          1       1385        450       1251       1553        827
           1178        734        122        123        530       1287       1257
            797       1148
 NAMES =  CASE        ALT         XM       DTAMB     V-KTAS   YCOMPD15   PAMB
         T-AMB(R)   HPX(3)    BLD(9)    BLD(10)     ERAM      WD(1)    WCOR(1)
           P(1)       T(1)


        3.        394.       0.20        0.0       132.1      50.00      14.49     517.26
    100.2       0.032      0.000     0.9950       541.3      538.1      14.82     521.41


FMT2
(F10.2,4F10.1,F10.2,F10.4,F10.2,/,8F10.2,)
IPUNCH =    314        651        665       1557       1323       1556       1558
            901        895        888       1174       1167         30         23
           1313       1306
 NAMES =  BPR(1)      FG       F-RAM    YCOMPD19    WFT      YCOMPD18 YCOMPD20
          RC-OA      R(25)     R(18)      T(27)     T(20)   AREA(27) AREA(20)
          WD(27)     WD(20)

    18.55     6792.3     3752.0     2999.9     1282.3      40.47     0.4274      10.20
     1.09       1.05     520.48    1225.12    2608.39     294.19     513.60      27.06

FMT3
(2F10.1,F10.2,4F10.4,F10.1/F10.3,F10.1,6F10.0,)
IPUNCH =   1459       1448       1157        413        416        415        418
            698       1578        274       1554       1554       1554       1554
           1554       1554
 NAMES =  XN(14)     XN(3)      T(10)     CD-18     CFG-19     CD-8       CFG-9
          HP(1)    YCOMPD40  BLDP(9)   YCOMPD16  YCOMPD16  YCOMPD16  YCOMPD16
        YCOMPD16  YCOMPD16

   1356.0    10029.9    2092.73     0.9310     0.9921     0.9276     0.9919     2249.7
    0.995       60.3     99999.     99999.     99999.     99999.     99999.     99999.
```

```
TERMAP (VER 12)  TITLE=  NASA LOW NOISE MODEL (FLOW SCALE DOWN OF MDXX BPR=14 SHORT BYP DUCT MODEL)       DATE= 04-09-92 CASE=    4.0
(CMS  04-06-92) STITLE= 394 FT, 0.20 MN, ISA, APPROACH POWER (FN=1000 LBF)                                TIME= 12:59:30 PAGE=     11

   ALT   PAMB   TAMSF  TAMBR  DTAMB DTAMTP PRELHM  KTAS    KCAS    XM     RPR   DEFF    ERAM     P1     TIR   DEFTIP ERAMTP  PTIP  TTIPR
   394. 14.488  57.59 517.26   0.0    0.0    0.0  132.1   131.3  0.200  1.023 0.9950 0.9950 14.823 521.41 0.0000 0.0000  0.000   0.0

(N) ID    NSI     T-R       P       W-COR      W       R        EFF      FAR       AREA    XMN      PS      THETA   DELTA    H      SF-N,1  (N)
--- --    ---     ---       -       -----      -       -        ---      ---       ----    ---      --      -----   -----    -      ------  ---
 1 FAN     0     521.4    14.823   419.444  421.961  1.0300   0.8149   0.00000     0.0   0.000    0.000   1.005   1.009   124.61  1.0191    1
 2 DELP    0     526.8    15.269    17.524   18.065  0.9990   0.0000   0.00000   384.3   0.077   15.205   1.016   1.039   125.91  0.2349    2
 3 HPC     0     526.8    15.254    17.542   18.065  6.0978   0.7440   0.00000     0.0   0.000    0.000   1.016   1.038   125.91  1.0241    3
 4 COOL    0     998.7    93.015     3.592   16.383  0.0000   0.0000   0.00000     0.0   0.000    0.000   1.925   6.329   240.66  0.0000    4
 5 DELP    0     998.7    93.015     3.592   16.383  1.0000   0.0000   0.00000    23.7   0.269   88.513   1.925   6.329   240.66  0.0000    5
 6 DELP    0     998.7    93.015     3.592   16.383  0.9740   0.0000   0.00000    20.6   0.314   86.963   1.925   6.329   240.66  0.4000    6
 7 HX C    0     998.7    90.594     3.293   14.630  1.0000   0.0000   0.00000    26.7   0.216   87.746   1.925   6.164   240.66  0.0000    7
 8 BURN    0     990.0    90.594     3.279   14.630  0.9785   0.9990   0.00000    26.5   0.216   87.736   1.909   6.164   238.50  0.6799    8
 9 COOL    0    1913.5    88.651     4.722   14.831  0.0000   0.0000   0.01372     0.0   0.000    0.000   3.689   6.032   488.59  0.0000    9
10 HPT     0    1862.3    88.651     5.054   15.776  3.9262   0.8962   0.01289     0.0   0.000    0.000   3.509   6.032   473.73  1.0046   10
11 PWRK    0    1376.6    22.579    16.728   15.776  0.0000   0.0000   0.01289     0.0   0.000    0.000   2.654   1.536   341.09  0.0007   11
12 COOL    0    1369.0    22.579    17.349   16.407  0.0000   0.0000   0.01239     0.0   0.000    0.000   2.640   1.536   338.92  0.0000   12
13 DELP    0    1342.7    22.579    18.165   17.346  0.9980   0.0000   0.01171   196.0   0.162   22.186   2.589   1.536   331.74  0.1163   13
14 LPT   220    1342.7    22.534    18.434   17.347  1.5239   0.8684   0.01171     0.0   0.000    0.000   2.552   1.533   331.73  1.0003   14
15 COOL    0    1221.0    14.787    26.453   17.347  0.0000   0.0000   0.01171     0.0   0.000    0.000   2.354   1.006   299.87  0.0000   15
16 DELP    0    1219.6    14.787    26.612   17.462  0.9995   0.0000   0.01163   406.6   0.113   14.660   2.351   1.006   299.48  0.0609   16
17 COOL    0    1219.6    14.779    26.626   17.462  0.0000   0.0000   0.01163     0.0   0.000    0.000   2.351   1.006   299.48  0.0000   17
18 NOZZ  110    1214.6    14.779    26.818   17.624  1.0201   0.0000   0.01152     1.0   0.000    0.000   2.342   1.006   298.14  0.0000   18
19  TH8    0    1208.2    14.488    27.286   17.624  1.0201   0.0000   0.01152   294.2   0.171   14.492   2.329   0.986   296.49  1.0000   19
20  EX9    0    1208.2    14.488    27.286   17.624  1.0000   0.0000   0.01152   294.2   0.171   14.488   2.329   0.986   296.49  0.0000   20
--- --    ---     ---       -       -----      -       -        ---      ---       ----    ---      --      -----   -----    -      ------  ---
21 COOL    0     526.8    15.269   391.802  403.895  0.0000   0.0000   0.00000     0.0   0.000    0.000   1.016   1.039   125.91  0.0000   21
22 DELP    0     526.8    15.269   391.802  403.895  0.9990   0.0000   0.00000  3500.0   0.193   14.877   1.016   1.039   125.91  0.0378   22
23 HX H    0     526.8    15.254   392.193  403.895  1.0000   0.0185   0.00000  3500.0   0.193   14.862   1.016   1.038   125.91  0.0000   23
24 DELP    0     527.2    15.254   392.305  403.895  1.0000   0.0000   0.00000  3500.0   0.193   14.862   1.016   1.038   125.99  0.0000   24
25 NOZZ  110     527.2    15.254   392.305  403.895  1.0529   0.0000   0.00000     1.0   0.000    0.000   1.016   1.038   125.99  0.0000   25
26 TH18    0     519.5    14.488   410.006  403.895  1.0529   0.0000   0.00000  2732.5   0.272   14.489   1.002   0.986   124.14  1.0000   26
27 EX19    0     519.5    14.488   410.006  403.895  1.0000   0.0000   0.00000  2732.5   0.272   14.488   1.002   0.986   124.14  0.0000   27
--- --    ---     ---       -       -----      -       -        ---      ---       ----    ---      --      -----   -----    -      ------  ---

S 1= RC-OA   =     6.2749 : S 2=EMAP(7) =    -8.6679 : S 3= EFF(23)=      0.0185

Y 1=     0.8158= COMP POLY EFF AT STATION  1                           : Y16=99999.0000=          0.000000 -              0.000000 +99999.0000
Y 2=     0.7990= COMP POLY EFF AT STATION  3                           : Y17=     0.7649=           P(25)  -  PS(26)              +     0.0000
Y 3= 1402.6169=            T(10)   -          459.669922 +    0.0000 : Y18=    22.5184=         YCOMPD17 *            29.440002 +     0.0000
Y 4=  132.6418=            H(10)   -    H(11)              +    0.0000 : Y19=   999.9995=            FN     - YCOMPD18              +     0.0000
Y 5=   37.8054=          YCOMPD 4 / THETA 10              +    0.0000 : Y20=     0.7226=           WFE     / YCOMPD19              +     0.0000
Y 6=   31.8655=            H(14)   -    H(15)              +    0.0000 : Y21=    22.8344=            T(1)   **             0.500000 +     0.0000
Y 7=   12.4889=          YCOMPD 6 / THETA 14              +    0.0000 : Y22=     1.5404=         YCOMPD21 /    P(1)                +     0.0000
Y 8=    1.2940=            RNI(14) /            0.379900 +    0.0000 : Y23=   650.0032=         YCOMPD22 *   WD(1)                +     0.0000
Y 9= 1952.5806=          XNMAP 14 *            42.203995 +    0.0000 : Y39=     1.0579=           V-19    /   V-9                  +     0.0000
Y10=    1.5973=          THETA 14 **            0.500000 +    0.0000 : Y40=     0.9950=         0.000000 -             0.000000 +     0.9950
Y11= 3118.9397=          YCOMPD 9 * YCOMPD10              +    0.0000 : Y41=     3.9105=          HP(14)   *             0.005000 +     0.0000
Y12=   10.0137=            FAR(9)  -            0.000000 +   10.0000 : Y42=     0.3279=           T(24)   -   T(23)                +     0.0000
Y15=   50.0000=         50.000000 -             0.000000 +    0.0000 : Y43= 4318.5195=           XN(1)   *             4.490000 +     0.0000

T 1= 2629.0000  X=YCOMPD15 Z=           W=             ID=03/11/91 E=1 : T 3=      0.1060  X=RMAP(14) Z=XNMAP 14 W=          ID=LPT X MN E=3
T 2= 2732.4937  X=  XM      Z=XNMAP   1 W=             ID=BYP AREA E=1 : T 4=      0.9950  X=YCOMPD23 Z=  XM      W=          ID=INLETREC E=1

P 1=YCOMPD41--> HPX(1)   : P 4=YTABLE 4--> DEFF

    --VARY-- ---HI--- ---LO---  (+)   OBJECT = TARGET    (+) LIM
C19= AREA(26)  2817.00  2183.00 1.00  AREA(26) YTABLE 2 0.00 L=1

MODE=YCOMPD19  PLA=  1000.000  ADDPLA=     0.000  PLA LIMIT= PLA
IDES=0  NVAR=10  MAX ERR# 6= 10.HP+10*WD = 0.00029  MATRX= 1  LOOP= 13
IONT  LOOPS=  1  MAX ERROR =         0.       = 0.00000

                      B L E E D S   A N D   L E A K A G E S
                      -------------------------------------
      FR - TO %W(FR)  %W(1)       W      T-R      P        H    DH/DHT :        FR - TO %W(FR)  %W(1)       W      T-R      P        H    DH/DHT
B 3=   3 - 12 0.0520 0.0022     0.939   859.1   60.457   206.24 0.7000 : B 7=   3 - OB 0.0000 0.0000     0.000   812.1   51.530   194.76 0.6000
B 5=   3 - 17 0.0090 0.0004     0.163   646.2   27.049   154.60 0.2500 : B 9=   3 - OB 0.0321 0.0014     0.580   764.9   43.497   183.29 0.5000
 STA   3 TOTL 0.0931 0.0040     1.682

      FR - TO %W(FR)  %W(1)       W      T-R      P        H    DH/DHT :        FR - TO %W(FR)  %W(1)       W      T-R      P        H    DH/DHT
B 1=   6 -  9 0.0577 0.0022     0.945   998.7   90.594   240.66 1.0000 : B 6=   6 - 21 0.0000 0.0000     0.000   998.7   90.594   240.66 1.0000
B 2=   6 - 11 0.0385 0.0015     0.631   998.7   90.594   284.79 1.0000 : B 8=   6 - OB 0.0038 0.0001     0.062   998.7   90.594   240.66 1.0000
B 4=   6 - 15 0.0070 0.0003     0.115   998.7   92.409   240.66 0.2500
 STA   6 TOTL 0.1070 0.0042     1.753

      FR - TO %W(FR)  %W(1)       W      T-R      P        H    DH/DHT
B10=  22 - OB 0.0000 0.0000     0.000   526.9   15.254   125.91 1.0000
 STA  22 TOTL 0.0000 0.0000     0.000

                     C O M P O N E N T   P E R F O R M A N C E
                     -----------------------------------------
 N  ID        BETA      XN       XN-MAP      HP    HPX/PHP  SF(N,2)    W-MAP  EFF-MAP    R-MAP    SMRELL   FLOW ID    EFF ID   MAPTYP
 1 FAN      1.0204   961.809    35.188   778.42     3.91   0.0000   392.985   0.7997   1.0409   58.509  OUIETENG  OUIETENG     1
 3 HPC      1.0243  9125.234    79.649  2820.22   100.20   0.0000    28.444   0.7265   5.6346   30.309   0.  0.     0.  0.      1
10 HPT      0.0000  9125.234   101.181  2921.32    39.38   0.0000     0.993   0.8921   3.3440    6.236  JAN.2690  JAN.2690      1
14 LPT      0.0000   961.809    46.265   782.10     0.00   0.0000     0.816   0.8652   1.5239    4.646  ANALYTIC  ANALYTIC      1
14 LPT                          RNISF(1,14),(2,14),(3,14),(4,14)=  1.00144  1.00344  1.00000  1.00000

                       N O Z Z L E   P E R F O R M A N C E
                       -----------------------------------
 NOZZLE      (N)  TYP     FG        FN       RJ     CFG      CD    AREA(TH)  V-EXIT  SF(TH,2) SF(EX,2)   CFGT ID     CDT ID   MAPTYP
PRI (8-9)    18    1     156.35     31.12  1.0201  0.9918  0.9263    294.19   287.8     3.830    0.000   CFG MDXX  CD  MDXX      1
SEC (18-19)  25    1    3791.06    991.39  1.0529  0.9919  0.9286   2732.49   304.4    35.725    0.000   CFG MDXX  CD  MDXX      1

                F I N A L   E N G I N E   P E R F O R M A N C E
                -----------------------------------------------
 BPR(1) RMIX(1) GAINMX(1) ANGMIX(1)     BPR(2) RMIX(2) GAINMX(2) ANGMIX(2)
22.3576  1.0321  0.0000    0.0000       0.0000  0.0000  0.0000    0.0000

   FG      FRAM     WFE   FARST   EPR     WAENG    WACOR    RCOA   FNR1   FNGF
 3947.4  2924.9   722.6 .06775  0.997  421.961  419.444   6.27   1014. 1.0000

   FN      SFC      WFT    FHV   NODISS   EFFTH     FN/WA  EFFOA   WFTR1  WFTGF
 1022.5  0.7067   722.6 18550.    0     0.0960   2.4233 0.7433    715. 1.0000

WARNING: TABLE(S) EXTRAPOLATED. NON-ZERO NSI(S).

NPTOT = 48      NP1 = 16      NP2 = 16      NP3 = 16

FMT1
(/,2F10.0,F10.2,2F10.1,3F10.2,/,F10.1,2F10.3,F10.4,2F10.1,      ,          2F10.2
IPUNCH =   412         1       1385       450       1251      1553       827
          1178       734        122       123        530      1287      1257
           797      1148
 NAMES =  CASE      ALT         XM      DTAMB     V-KTAS   YCOMPD15    PAMB
         T-AMB(R)  HPX(3)    BLD(9)    BLD(10)    ERAM      WD(1)    WCOR(1)
           P(1)      T(1)


      4.       394.       0.20        0.0       132.1      50.00      14.49     517.26
   100.2      0.032      0.000     0.9950      422.0      419.4      14.82     521.41


FMT2
(F10.2,4F10.1,F10.2,F10.4,F10.2,/,8F10.2,)
IPUNCH =   314       651       665      1557      1323      1556      1558
           901       895       888      1174      1167        30        23
          1313      1306
 NAMES =  BPR(1)     FG       F-RAM   YCOMPD19    WFT      YCOMPD18 YCOMPD20
          RC-OA     R(25)     R(18)     T(27)      T(20)   AREA(27) AREA(20)
          WD(27)    WD(20)

   22.36     3947.4     2924.9     1000.0      722.6      22.52     0.7226       6.27
    1.05       1.02     519.46    1208.21    2732.49     294.19     403.90      17.62

FMT3
(2F10.1,F10.2,4F10.4,F10.1/F10.3,F10.1,6F10.0,)
IPUNCH =  1459      1448      1157       413       416       415       418
           698      1578       274      1554      1554      1554      1554
          1554      1554
 NAMES =  XN(14)    XN(3)     T(10)    CD-18     CFG-19    CD-8      CFG-9
          HP(1)   YCOMPD40  BLDP(9)  YCOMPD16  YCOMPD16  YCOMPD16  YCOMPD16
        YCOMPD16  YCOMPD16

   961.8     9125.2    1862.29     0.9286     0.9919     0.9263     0.9918      778.4
   0.995       43.5     99999.     99999.     99999.     99999.     99999.     99999.
```

```
TERMAP (VER 12)  TITLE=  NASA LOW NOISE MODEL (FLOW SCALE DOWN OF MDXX BPR=14 SHORT BYP DUCT MODEL)        DATE= 04-09-92 CASE=    5.0
(CMS  04-06-92) STITLE= 535 FT, 0.25 MN, ISA, MAX TAKE-OFF (FAN CORR N =85.9%)                               TIME= 12:59:30 PAGE=     12

   ALT   PAMB    TAMBF  TAMBR   DTAMB DTAMTP PRELHM  KTAS    KCAS    XM      RPR   DEFF    ERAM     P1     T1R    DEFTIP ERAMTP   PTIP   TTIPR
   535. 14.414  57.09 516.76     0.0     0.0    0.0  165.1   163.8   0.250  1.039 0.9950 0.9950 14.979 523.23 0.0000 0.0000   0.000    1.0

(N) ID      NSI     T-R       P        W-COR       W         R        EFF       FAR      AREA    XMN       PS     THETA  DELTA      H      SF-N.1  (N)
--- --      ---     ---       -        -----       -         -        ---       ---      ----    ---       --     -----  -----      -      ------  ---
  1 FAN      0     523.2    14.979   836.325   848.718   1.2691   0.8737   0.00000      0.0   0.000    0.000   1.009   1.019   125.05   1.0191    1
  2 DELP     0     565.5    19.010    46.282    57.336   0.9930   0.0000   0.00000    384.3   0.208   18.443   1.090   1.294   135.18   0.2349    2
  3 HPC      0     565.5    18.377    46.608    57.335  19.8826   0.8582   0.00000      0.0   0.000    0.000   1.090   1.284   135.18   1.0241    3
  4 COOL     0    1415.2   375.317     3.419    52.857   0.0000   0.0000   0.00000      0.0   0.000    0.000   2.728  25.538   346.87   0.0000    4
  5 DELP     0    1415.2   375.317     3.419    52.857   1.0000   0.0000   0.00000     23.7   0.257  358.937   2.728  25.538   346.87   0.0000    5
  6 DELP     0    1415.2   375.317     3.419    52.857   0.9766   0.0000   0.00000     20.6   0.300  353.337   2.728  25.538   346.87   0.4000    6
  7 HX C     0    1415.2   366.525     3.126    47.201   1.0000   0.0000   0.00000     26.7   0.206  356.174   2.728  24.940   346.87   0.0000    7
  8 BURN     0    1399.5   366.525     3.109    47.201   0.9808   0.9990   0.00000     26.5   0.206  356.162   2.698  24.940   342.78   0.6799    8
  9 COOL     0    2941.3   359.479     4.714    48.418   0.0000   0.0000   0.02578      0.0   0.000    0.000   5.671  24.461   802.00   0.0000    9
 10 HPT      0    2858.7   359.479     5.085    51.468   4.8276   0.8987   0.02421      0.0   0.000    0.000   5.327  24.461   775.03   1.0046   10
 11 PWRK     0    2078.4    74.464    20.334    51.468   0.0000   0.0000   0.02421      0.0   0.000    0.000   4.007   5.067   542.01   0.0007   11
 12 COOL     0    2063.9    74.464    21.064    53.503   0.0000   0.0000   0.02327      0.0   0.000    0.000   3.979   5.067   537.21   0.0000   12
 13 DELP     0    2020.2    74.464    22.001    56.485   0.9970   0.0000   0.02202    196.0   0.200   72.538   3.895   5.067   523.81   0.1163   13
 14 LPT      0    2020.2    74.240    22.577    56.474   4.0661   0.9280   0.02202      0.0   0.000    0.000   3.792   5.052   523.81   1.0003   14
 15 COOL     0    1475.4    18.258    76.666    56.474   0.0000   0.0000   0.02202      0.0   0.000    0.000   2.845   1.242   370.80   0.0000   15
 16 DELP     0    1475.1    18.258    77.159    56.844   0.9952   0.0000   0.02187    406.6   0.352   16.822   2.844   1.242   370.65   0.0609   16
 17 COOL     0    1475.1    18.171    77.530    56.844   0.0000   0.0000   0.02187      0.0   0.000    0.000   2.844   1.236   370.65   0.0000   17
 18 NOZZ     0    1469.3    18.171    78.081    57.360   1.2606   0.0000   0.02167      1.0   0.000    0.000   2.833   1.236   369.01   0.0000   18
 19  TH8     0    1385.2    14.414    95.573    57.360   1.2606   0.0000   0.02167    294.2   0.597   14.412   2.671   0.981   346.26   1.0000   19
 20  EX9     0    1385.2    14.414    95.573    57.360   1.0000   0.0000   0.02167    294.2   0.597   14.414   2.671   0.981   346.26   0.0000   20
--- --      ---     ---       -        -----       -         -        ---       ---      ----    ---       --     -----  -----      -      ------  ---
 21 COOL     0     565.5    19.010   638.805   791.382   0.0000   0.0000   0.00000      0.0   0.000    0.000   1.090   1.294   135.18   0.0000   21
 22 DELP     0     565.5    19.010   638.805   791.382   0.9973   0.0000   0.00000   3500.0   0.328   17.644   1.090   1.294   135.18   0.0378   22
 23 HX H     0     565.5    18.958   640.547   791.382   1.0000   0.0185   0.00000   3500.0   0.329   17.588   1.090   1.290   135.18   0.0000   23
 24 DELP     0     566.5    18.958   641.125   791.382   1.0000   0.0000   0.00000   3500.0   0.330   17.585   1.092   1.290   135.42   0.0000   24
 25 NOZZ     0     566.5    18.958   641.125   791.382   1.3152   0.0000   0.00000      1.0   0.000    0.000   1.092   1.290   135.42   0.0000   25
 26 TH18     0     523.8    14.414   810.822   791.382   1.3152   0.0000   0.00000   2268.3   0.638   14.414   1.010   0.981   125.18   1.0000   26
 27 EX19     0     523.8    14.414   810.822   791.382   1.0000   0.0000   0.00000   2268.3   0.638   14.414   1.010   0.981   125.18   0.0000   27
--- --      ---     ---       -        -----       -         -        ---       ---      ----    ---       --     -----  -----      -      ------  ---

S 1= RC-OA   =    25.0556 : S 2=EMAP(7) =   -15.6760 : S 3= EFF(23)=      0.0185

Y 1=       0.8779= COMP POLY EFF AT STATION  1                          : Y16=99999.0000=          0.000000 -                 0.000000 +99999.0000
Y 2=       0.9040= COMP POLY EFF AT STATION  3                          : Y17=     4.5437=          P(25)    -   PS(26)                 +     0.0000
Y 3= 2399.0186=             T(10)    -         459.669922 +    0.0000 : Y18=   133.7657=          YCOMPD17 *              29.440002 +     0.0000
Y 4=   233.0217=            H(10)    -    H(11)           +    0.0000 : Y19=11904.3125=          FN       -  YCOMPD18                +     0.0000
Y 5=    43.7434=          YCOMPD 4 / THETA 10             +    0.0000 : Y20=     0.3680=          WFE      /  YCOMPD19                +     0.0000
Y 6=   153.0120=            H(14)    -    H(15)           +    0.0000 : Y21=    22.3743=          T(1)     **              0.500000 +     0.0000
Y 7=    40.3495=          YCOMPD 6 / THETA 14             +    0.0000 : Y22=     1.5271=          YCOMPD21 /   P(1)                   +     0.0000
Y 8=     2.7111=            RNI(14) /            0.379900 +    0.0000 : Y23= 1296.0369=          YCOMPD22 *   WD(1)                  +     0.0000
Y 9= 3916.6653=           XNMAP 14 *           42.203995 +    0.0000 : Y39=     0.6712=          V-19     /   V-9                    +     0.0000
Y10=     1.9473=          THETA 14 **           0.500000 +    0.0000 : Y40=     0.9950=          0.000000 -               0.000000 +     0.9950
Y11= 7627.1055=           YCOMPD 9 * YCOMPD10             +    0.0000 : Y41=    61.1297=          HP(14)   *               0.005000 +     0.0000
Y12=    10.0258=            FAR(9)   -           0.000000 +   10.0000 : Y42=     1.0203=          T(24)    -    T(23)                 +     0.0000
Y15=    50.0000=         50.000000 -             0.000000 +    0.0000 : Y43=10560.5781=          XN(1)    *               4.490000 +     0.0000

T 1= 2629.0000   X=YCOMPD15 Z=           W=           ID=03/11/91 E=1  : T 3=      0.3239   X=RMAP(14) Z=XNMAP 14 W=            ID=LPT X MN E=1
T 2= 2268.2627   X=  XM      Z=XNMAP  1 W=           ID=BYP AREA E=3  : T 4=      0.9950   X=YCOMPD23 Z=   XM     W=            ID=INLETREC E=1

P 1=YCOMPD41--> HPX(1)   : P 4=YTABLE 4--> DEFF

     --VARY-- ---HI--- ---LO---  (+)   OBJECT = TARGET   (+) LIM
C19= AREA(26)  2817.00  2183.00 1.00  AREA(26) YTABLE 2 0.00 L=1

MODE=XNMAP  1  PLA=    85.900  ADDPLA=     0.000  PLA LIMIT= PLA
IDES=0  NVAR=10  MAX ERR= 7= 14.WD+10/WS = 0.00017  MATRX= 2  LOOP= 12
IOMT  LOOPS=  1  MAX ERROR =        0.     = 0.00000

                         B L E E D S    A N D    L E A K A G E S
                         ---------------------------------------
      FR - TO %W(FR)  %W(1)       W      T-R      P        H     DH/DHT :       FR - TO %W(FR)  %W(1)       W      T-R      P        H     DH/DHT
B 3=   3 - 12 0.0520 0.0035    2.981  1168.8  197.586   283.37  0.7000 : B 7=   3 - OB 0.0000 0.0000    0.000  1084.9  154.443   262.20  0.6000
B 5=   3 - 17 0.0090 0.0006    0.516   784.7   53.847   188.10  0.2500 : B 9=   3 - OB 0.0171 0.0012    0.980  1000.2  118.242   241.03  0.5000
 STA   3 TOTL 0.0781 0.0053    4.478

      FR - TO %W(FR)  %W(1)       W      T-R      P        H     DH/DHT :       FR - TO %W(FR)  %W(1)       W      T-R      P        H     DH/DHT
B 1=   6 -  9 0.0577 0.0036    3.050  1415.2  366.525   346.87  1.0000 : B 6=   6 - 21 0.0000 0.0000    0.000  1415.2  366.525   346.87  1.0000
B 2=   6 - 11 0.0385 0.0024    2.035  1415.2  366.525   415.85  1.0000 : B 8=   6 - OB 0.0038 0.0002    0.201  1415.2  366.525   346.87  1.0000
B 4=   6 - 15 0.0070 0.0004    0.370  1415.2  373.119   346.87  0.2500
 STA   6 TOTL 0.1070 0.0067    5.656

      FR - TO %W(FR)  %W(1)       W      T-R      P        H     DH/DHT
B10=  22 - OB 0.0000 0.0000    0.000   565.5   18.958   135.18  1.0000
 STA  22 TOTL 0.0000 0.0000    0.000

                       C O M P O N E N T    P E R F O R M A N C E
                       -------------------------------------------
  N  ID        BETA       XN       XN-MAP      HP      HPX/PHP  SF(N.2)     W-MAP   EFF-MAP    R-MAP     SMRELL    FLOW ID     EFF ID   MAPTYP
  1 FAN      0.8513  2352.022     85.900  12165.94     61.13    0.0000   783.569   0.8573    1.3664    19.392   QUIETENG   QUIETENG      1
  3 HPC      1.0150 11408.418     96.117  16642.25    127.10    0.0000    75.576   0.8380   18.1670    21.618     0.  0.     0.  0.       1
 10 HPT      0.0000 11408.418    102.660  16770.08    198.60    0.0000     0.999   0.8946    4.0661     6.279   JAN.2690   JAN.2690      1
 14 LPT      0.0000  2352.022     92.803  12225.95      0.00    0.0000     0.998   0.9214    4.0661     6.340   ANALYTIC   ANALYTIC      1
 14 LPT                              RNISF(1,14),(2,14),(3,14),(4,14)=   1.00250  1.00692   1.00000   1.00000

                            N O Z Z L E    P E R F O R M A N C E
                            ------------------------------------
  NOZZLE      (N)  TYP       FG         FN        RJ       CFG       CD     AREA(TH)  V-EXIT  SF(TH.2) SF(EX.2)   CFGT ID    CDT ID   MAPTYP
PRI (8-9)     18    1     1889.23    1392.67   1.2606   0.9929   0.9374     294.19   1067.2    0.329    0.000   CFG MDXX   CD  MDXX     1
SEC (18-19)   25    1    17499.06   10645.41   1.3152   0.9932   0.9442    2268.27    716.3    2.550    0.000   CFG MDXX   CD  MDXX     1

                     F I N A L    E N G I N E    P E R F O R M A N C E
                     -------------------------------------------------
  BPR(1) RMIX(1) GAINMX(1) ANGMIX(1)      BPR(2) RMIX(2) GAINMX(2) ANGMIX(2)
 13.8025  1.0433  0.0000    0.0000        0.0000  0.0000  0.0000    0.0000

    FG       FRAM     WFE   FARST    EPR     WAENG     WACOR    RCOA    FNR1   FNGF
 19388.3   7350.2  4380.4 .06775  1.213   848.718   836.325   25.06   11810. 1.0000

    FN       SFC      WFT    FHV    NODISS    EFFTH     FN/WA  EFFOA   WFTR1  WFTGF
 12038.1  0.3639  4380.4 18550.      0      0.3588  14.1838 0.8484    4279. 1.0000

WARNING: TABLE(S) EXTRAPOLATED.

NPTOT = 48     NP1 = 16     NP2 = 16     NP3 = 16

FMT1
(/,2F10.0,F10.2,2F10.1,3F10.2,/,F10.1,2F10.3,F10.4,2F10.1,         ,           2F10.2
IPUNCH =    412         1      1385       450      1251      1553       827
           1178       734       122       123       530      1287      1257
            797      1148
 NAMES =  CASE       ALT         XM      DTAMB    V-KTAS  YCOMPD15   PAMB
         T-AMB(R)  HPX(3)   BLD(9)    BLD(10)    ERAM      WD(1)   WCOR(1)
           P(1)      T(1)


       5.       535.      0.25        0.0      165.1      50.00     14.41    516.76
    127.1      0.017     0.000     0.9950      848.7      836.3     14.98    523.23


FMT2
(F10.2,4F10.1,F10.2,F10.4,F10.2,/,8F10.2,)
IPUNCH =    314       651       665      1557      1323      1556      1558
            901       895       888      1174      1167        30        23
           1313      1306
 NAMES =  BPR(1)     FG      F-RAM   YCOMPD19   WFT     YCOMPD18 YCOMPD20
          RC-OA     R(25)    R(18)     T(27)     T(20)  AREA(27) AREA(20)
          WD(27)    WD(20)

    13.80    19388.3     7350.2    11904.3     4380.4    133.77    0.3680     25.06
     1.32       1.26     523.78    1385.24    2268.27    294.19    791.38     57.36

FMT3
(2F10.1,F10.2,4F10.4,F10.1/F10.3,F10.1,6F10.0,)
IPUNCH =   1459      1448      1157       413       416       415       418
            698      1578       274      1554      1554      1554      1554
           1554      1554
 NAMES =  XN(14)    XN(3)     T(10)    CD-18     CFG-19    CD-3      CFG-9
          HP(1)   YCOMPD40  BLDP(9)  YCOMPD16  YCOMPD16  YCOMPD16  YCOMPD16
        YCOMPD16  YCOMPD16

   2352.0    11408.4    2858.69     0.9442     0.9932     0.9374     0.9929   12165.9
    0.995      118.2     99999.     99999.     99999.     99999.     99999.    99999.
```

```
TERMAP (VER 12)  TITLE=  NASA LOW NOISE MODEL (FLOW SCALE DOWN OF MDXX BPR=14 SHORT BYP DUCT MODEL)        DATE= 04-09-92 CASE=    6.0
(CMS  04-06-92) STITLE= 1100 FT, 128 KTAS, ISA, CUTBACK CONDITION (FN=8500 LBF)                              TIME= 12:59:30 PAGE=     13
```

ALT	PAMB	TAMBF	TAMBR	DTAMB	DTAMTP	PRELHM	KTAS	KCAS	XM	RPR	DEFF	ERAM	P1	T1R	DEFTIP	ERAMTP	PTIP	TTIPR
1100.	14.121	55.08	514.75	0.0	0.0	0.0	128.0	125.9	0.194	1.022	0.9950	0.9950	14.425	518.64	0.0000	0.0000	0.000	0.0

(N)	ID	NSI	T-R	P	W-COR	W	R	EFF	FAR	AREA	XMN	PS	THETA	DELTA	H	SF-N,1	(N)
1	FAN	0	518.6	14.425	732.095	718.618	1.1873	0.8686	0.00000	0.0	0.000	0.000	1.000	0.982	123.95	1.0191	1
2	DELP	0	548.7	17.127	39.399	44.643	0.9950	0.0000	0.00000	384.3	0.176	16.761	1.058	1.165	131.15	0.2349	2
3	HPC	0	548.7	17.041	39.599	44.643	16.1646	0.8495	0.00000	0.0	0.000	0.000	1.058	1.160	131.16	1.0241	3
4	COOL	0	1305.7	275.465	3.484	41.157	0.0000	0.0000	0.00000	0.0	0.000	0.000	2.517	18.744	318.44	0.0000	4
5	DELP	0	1305.7	275.465	3.484	41.157	1.0000	0.0000	0.00000	23.7	0.262	262.957	2.517	18.744	318.44	0.0000	5
6	DELP	0	1305.7	275.465	3.484	41.157	0.9756	0.0000	0.00000	20.6	0.305	258.670	2.517	18.744	318.44	0.4000	6
7	HX C	0	1305.7	268.747	3.189	36.753	1.0000	0.0000	0.00000	26.7	0.210	260.841	2.517	18.287	318.44	0.0000	7
8	BURN	0	1291.8	268.747	3.172	36.753	0.9300	0.9990	0.00000	26.5	0.210	260.828	2.491	18.287	314.84	0.6799	8
9	COOL	0	2631.4	263.363	4.719	37.549	0.0000	0.0000	0.02165	0.0	0.000	0.000	5.073	17.921	703.72	0.0000	9
10	HPT	0	2558.8	263.363	5.082	39.922	4.8125	0.8995	0.02033	0.0	0.000	0.000	4.781	17.921	680.80	1.0046	10
11	PWRK	0	1846.2	54.725	20.226	39.922	0.0000	0.0000	0.02033	0.0	0.000	0.000	3.559	3.724	473.12	0.0007	11
12	COOL	0	1835.3	54.725	20.967	41.506	0.0000	0.0000	0.01954	0.0	0.000	0.000	3.538	3.724	469.63	0.0000	12
13	DELP	0	1798.2	54.725	21.915	43.828	0.9970	0.0000	0.01849	196.0	0.199	53.321	3.467	3.724	458.65	0.1163	13
14	LPT	0	1798.2	54.562	22.425	43.828	3.3463	0.9227	0.01849	0.0	0.000	0.000	3.387	3.713	458.65	1.0003	14
15	COOL	0	1365.1	16.305	64.087	43.828	0.0000	0.0000	0.01849	0.0	0.000	0.000	2.632	1.109	339.84	0.0000	15
16	DELP	0	1364.7	16.305	64.500	44.116	0.9968	0.0000	0.01836	406.6	0.286	15.436	2.631	1.109	339.70	0.0609	16
17	COOL	0	1364.7	16.252	64.710	44.116	0.0000	0.0000	0.01836	0.0	0.000	0.000	2.631	1.106	339.70	0.0000	17
18	NOZZ	110	1359.5	16.252	65.173	44.518	1.1509	0.0000	0.01820	1.0	0.000	0.000	2.621	1.106	338.24	0.0000	18
19	TH8	0	1311.0	14.121	73.659	44.518	1.1509	0.0000	0.01820	294.2	0.461	14.128	2.528	0.961	325.34	1.0000	19
20	EX9	0	1311.0	14.121	73.659	44.518	1.0000	0.0000	0.01820	294.2	0.461	14.121	2.528	0.961	325.34	0.0000	20
21	COOL	0	548.7	17.127	594.807	673.975	0.0000	0.0000	0.00000	0.0	0.000	0.000	1.058	1.165	131.15	0.0000	21
22	DELP	0	548.7	17.127	594.807	673.975	0.9977	0.0000	0.00000	3500.0	0.303	16.073	1.058	1.165	131.15	0.0378	22
23	HX H	0	548.7	17.088	596.196	673.975	1.0000	0.0185	0.00000	3500.0	0.303	16.030	1.058	1.163	131.16	0.0000	23
24	DELP	0	549.5	17.088	596.642	673.975	1.0000	0.0000	0.00000	3500.0	0.304	16.029	1.059	1.163	131.35	0.0000	24
25	NOZZ	0	549.5	17.088	596.642	673.975	1.2101	0.0000	0.00000	1.0	0.000	0.000	1.059	1.163	131.35	0.0000	25
26	TH18	0	520.3	14.121	702.540	673.975	1.2101	0.0000	0.00000	2386.9	0.529	14.121	1.003	0.961	124.35	1.0000	26
27	EX19	0	520.3	14.121	702.540	673.975	1.0000	0.0000	0.00000	2386.9	0.529	14.121	1.003	0.961	124.35	0.0000	27

```
S 1= RC-OA  =    19.0961 : S 2=EMAP(7) =  -13.9581 : S 3= EFF(23)=      0.0185

Y 1=     0.8717= COMP POLY EFF AT STATION  1                            : Y16=99999.0000=           0.000000 -                 0.000000 +99999.0000
Y 2=     0.8955= COMP POLY EFF AT STATION  3                            : Y17=     2.9667=            P(25)  -   PS(26)                 +     0.0000
Y 3= 2099.1235=             T(10)  -            459.669922 +    0.0000 : Y18=    87.3394=          YCOMPD17 *              29.440002 +     0.0000
Y 4=   207.6882=            H(10)  -    H(11)                +    0.0000 : Y19= 8500.5937=            FN     - YCOMPD18                +     0.0000
Y 5=    43.4382=          YCOMPD 4 / THETA 10                +    0.0000 : Y20=     0.3369=           WFE     / YCOMPD19                +     0.0000
Y 6=   118.8113=            H(14)  -    H(15)                +    0.0000 : Y21=    22.7736=            T(1)    **             0.500000 +     0.0000
Y 7=    35.0765=          YCOMPD 6 / THETA 14                +    0.0000 : Y22=     1.5787=          YCOMPD21 /    P(1)                +     0.0000
Y 8=     2.2632=            RNI(14) /             0.379900 +    0.0000 : Y23= 1134.5137=          YCOMPD22 *   WD(1)               +     0.0000
Y 9= 3619.1921=           XNMAP 14 *            42.203995 +    0.0000 : Y39=     0.7366=            V-19    /   V-9                 +     0.0000
Y10=     1.8404=           THETA 14 **            0.500000 +    0.0000 : Y40=     0.9950=          0.000000 -             0.000000 +     0.9950
Y11= 6660.8906=          YCOMPD 9 * YCOMPD10               +    0.0000 : Y41=    36.8375=           HP(14)   *             0.005000 +     0.0000
Y12=    10.0216=            FAR(9)  -             0.000000 +   10.0000 : Y42=     0.8208=            T(24)   -   T(23)               +     0.0000
Y15=    50.0000=          50.000000 -             0.000000 +    0.0000 : Y43= 9222.7461=            XN(1)   *             4.490000 +     0.0000

T 1= 2629.0000  X=YCOMPD15 Z=          W=             ID=03/11/91 E=1  : T 3=     0.2633  X=RMAP(14) Z=XNMAP 14 W=             ID=LPT X MN E=1
T 2= 2386.9043  X=  XM      Z=XNMAP   1 W=            ID=BYP AREA E=1  : T 4=     0.9950  X=YCOMPD23 Z=  XM      W=             ID=INLETREC E=1

P 1=YCOMPD41--> HPX(1)   : P 4=YTABLE 4--> DEFF

     --VARY-- ---HI--- ---LO---  (+)    OBJECT = TARGET    (+) LIM
C19= AREA(26)  2817.00  2183.00 1.00   AREA(26) YTABLE 2 0.00 L=1

MODE=YCOMPD19  PLA=  8500.000  ADDPLA=     0.000  PLA LIMIT= PLA
IDES=0  NVAR=10  MAX ERR# 9= 19.PS+A/P+A = 0.00025  MATRX= 0  LOOP= 23
IOMT  LOOPS=  1  MAX ERROR =        0.     = 0.00000
```

B L E E D S   A N D   L E A K A G E S

```
      FR - TO %W(FR)  %W(1)      W     T-R      P        H    DH/DHT :       FR - TO %W(FR)  %W(1)      W     T-R      P        H    DH/DHT
B 3=   3 - 12 0.0520 0.0032    2.321 1085.1 149.826  262.25 0.7000 : B 7=   3 - OB 0.0000 0.0000    0.000 1010.2 118.752  243.52 0.6000
B 5=   3 - 17 0.0090 0.0006    0.402  743.0  44.403  177.98 0.2500 : B 9=   3 - OB 0.0171 0.0011    0.763  934.6  92.387  224.80 0.5000
 STA   3 TOTL 0.0781 0.0049    3.487

      FR - TO %W(FR)  %W(1)      W     T-R      P        H    DH/DHT :       FR - TO %W(FR)  %W(1)      W     T-R      P        H    DH/DHT
B 1=   6 -  9 0.0577 0.0033    2.375 1305.7 268.747  318.44 1.0000 : B 6=   6 - 21 0.0000 0.0000    0.000 1305.7 268.747  318.44 1.0000
B 2=   6 - 11 0.0385 0.0022    1.585 1305.7 268.747  381.90 1.0000 : B 8=   6 - OB 0.0038 0.0002    0.156 1305.7 268.747  318.44 1.0000
B 4=   6 - 15 0.0070 0.0004    0.288 1305.7 273.785  318.44 0.2500
 STA   6 TOTL 0.1070 0.0061    4.404

      FR - TO %W(FR)  %W(1)      W     T-R      P        H    DH/DHT
B10=  22 - OB 0.0000 0.0000    0.000  548.7  17.088  131.16 1.0000
 STA  22 TOTL 0.0000 0.0000    0.000
```

C O M P O N E N T   P E R F O R M A N C E

N	ID	BETA	XN	XN-MAP	HP	HPX/PHP	SF(N,2)	W-MAP	EFF-MAP	R-MAP	SMRELL	FLOW ID	EFF ID	MAPTYP
1	FAN	0.8987	2054.064	75.349	7330.05	36.84	0.0000	685.914	0.8523	1.2551	25.313	QUIETENG	QUIETENG	1
3	HPC	1.0251	10943.145	93.595	11463.84	127.10	0.0000	64.211	0.8295	14.7868	23.724	0. 0.	0. 0.	1
10	HPT	0.0000	10943.145	103.942	11588.64	142.29	0.0000	0.998	0.8954	4.0540	6.316	JAN.2690	JAN.2690	1
14	LPT	0.0000	2054.064	85.755	7367.50	0.00	0.0000	0.992	0.9163	3.3463	6.110	ANALYTIC	ANALYTIC	1
14	LPT			RNISF(1,14),(2,14),(3,14),(4,14)=				1.00250	1.00674	1.00000	1.00000			

N O Z Z L E   P E R F O R M A N C E

NOZZLE	(N)	TYP	FG	FN	RJ	CFG	CD	AREA(TH)	V-EXIT	SF(TH,2)	SF(EX,2)	CFGT ID	CDT ID	MAPTYP
PRI (8-9)	18	1	1103.54	803.78	1.1509	0.9924	0.9326	294.19	803.7	0.449	0.000	CFG MDXX	CD MDXX	1
SEC (18-19)	25	1	12309.71	7784.16	1.2101	0.9927	0.9376	2386.90	592.0	3.657	0.000	CFG MDXX	CD MDXX	1

F I N A L   E N G I N E   P E R F O R M A N C E

BPR(1)	RMIX(1)	GAINMX(1)	ANGMIX(1)	BPR(2)	RMIX(2)	GAINMX(2)	ANGMIX(2)
15.0970	1.0514	0.0000	0.0000	0.0000	0.0000	0.0000	0.0000

FG	FRAM	WFE	FARST	EPR	WAENG	WACOR	RCOA	FNR1	FNGF
13413.2	4825.3	2864.1	.06775	1.127	718.618	732.095	19.10	8749.	1.0000

FN	SFC	WFT	FHV	NODISS	EFFTH	FN/WA	EFFOA	WFTR1	WFTGF
8587.9	0.3335	2864.1	18550.	0	0.3131	11.9506	0.8424	2918.	1.0000

```
WARNING: NON-ZERO NSI(S).

NPTOT = 48     NP1 = 16     NP2 = 16     NP3 = 16

FMT1
(/,2F10.0,F10.2,2F10.1,3F10.2,/,F10.1,2F10.3,F10.4,2F10.1,         ,          2F10.2
IPUNCH =   412         1      1385       450      1251      1553       827
          1178       734       122       123       530      1287      1257
           797      1148
 NAMES =  CASE       ALT        XM      DTAMB    V-KTAS  YCOMPD15    PAMB
       T-AMB(R)   HPX(3)    BLD(9)    BLD(10)     ERAM     WD(1)   WCOR(1)
          P(1)      T(1)


        6.      1100.      0.19       0.0     128.0     50.00     14.12    514.75
     127.1     0.017     0.000    0.9950     718.6     732.1     14.43    518.64


FMT2
(F10.2,4F10.1,F10.2,F10.4,F10.2,/,8F10.2,)
IPUNCH =   314       651       665      1557      1323      1556      1558
           901       895       888      1174      1167        30        23
          1313      1306
 NAMES =  BPR(1)     FG      F-RAM   YCOMPD19    WFT     YCOMPD18  YCOMPD20
          RC-OA     R(25)    R(18)      T(27)     T(20)  AREA(27)  AREA(20)
          WD(27)    WD(20)

     15.10   13413.2    4825.3    8500.6    2864.1     87.34    0.3369     19.10
      1.21      1.15    520.34   1311.03   2386.90    294.19    673.98     44.52

FMT3
(2F10.1,F10.2,4F10.4,F10.1/F10.3,F10.1,6F10.0,)
IPUNCH =  1459      1448      1157       413       416       415       418
           698      1578       274      1554      1554      1554      1554
          1554      1554
 NAMES =  XN(14)    XN(3)     T(10)     CD-18    CFG-19     CD-8     CFG-9
          HP(1)  YCOMPD40   BLDP(9)  YCOMPD16  YCOMPD16  YCOMPD16  YCOMPD16
      YCOMPD16  YCOMPD16

    2054.1   10943.1   2558.79    0.9376    0.9927    0.9326    0.9924    7330.0
     0.995      92.4    99999.    99999.    99999.    99999.    99999.    99999.
```

Nasa Low Noise BPR=14 Model, Standard Day, Installed

(Representative Mission for DOC Analysis) 500 n mi stage length

Flight Segment	Rating	Time Spent (min)	Altitude (ft)	Mach Number	RIT (°F) or %N/√θ	Fn (lbf)	Wf (lbm/hr)	TSFC (lbm/hr-lb
Taxi out	Ground Idle	10	0	0	25.8%	1000	480.4	.4803
Take-off	Max T/O	0.5	0	0.25	85.3%	11808	4357.8	.3690
		1.5	1500	0.39	86.9%	10558	4637.2	.4392
Climb	Max Climb	2.0	4000	0.41	2355	8657	3916.2	.4524
		1.2	7000	0.43	2355	8179	3710.8	.4537
Accel	Max Climb	2.0	10000	0.45	2355	7699	3507.2	.4555
		2.0	10000	0.50	2355	7349	3543.5	.4822
		2.0	10000	0.56	2355	6947	3585.5	.5161
Climb	Max Climb	2.0	14000	0.60	2355	6333	3328.2	.5255
		2.0	20000	0.67	2355	5473	2968.4	.5424
		2.0	26000	0.75	2355	4703	2638.1	.5609
		2.0	30000	0.75	2355	4349	2383.5	.5481
		2.0	33000	0.75	2355	4079	2201.4	.5396
		3.0	35000	0.75	2355	3898	2083.7	.5345
		3.6	37000	0.75	2355	3634	1934.1	.5323
Cruise	Max Cruise	32.7	37000	0.77	2250	3161	1715.0	.5425
Descent	Flight Idle	2.0	37000	0.77	65%	420	427.5	1.0179
		2.0	32000	0.81	65%	442	525.6	1.1888
		2.0	29000	0.81	65%	510	604.3	1.1857
		2.0	20000	0.67	60%	840	830.1	.9884
		2.0	10000	0.56	50%	574	822.0	1.4323
		1.6	10000	0.45	45%	635	714.5	1.1251
Descent	Flight Idle	6.4	1500	0.39	42%	852	910.5	1.0687
Approach		8.0	0	0.20	35.1%	1000	729.0	.7290
Taxi in	Ground Idle	4.5	0	0	25.8%	1000	480.4	.4803

CSB 5/27/92

```
TERMAP (VER 12)  TITLE=  NASA LOW NOISE MODEL (FLOW SCALE DOWN OF MDXX BPR=14 SHORT BYP DUCT MODEL)      DATE= 05-26-92 CASE=    1.0
(CMS  04-06-92) STITLE= START UP, TAXI, GROUND IDLE, FN=1000 LBS                                         TIME= 16:15:20 PAGE=      7
```

ALT	PAMB	TAMBF	TAMBR	DTAMB	DTAMTP	PRELHM	KTAS	KCAS	XM	RPR	DEFF	ERAM	P1	T1R	DEFTIP	ERAMTP	PTIP	TTIPR
0.	14.696	59.00	518.67	0.0	0.0	0.0	0.0	0.0	0.000	0.991	0.9912	0.9912	14.568	518.67	0.0000	0.0000	0.000	0.0

(N)	ID	NSI	T-R	P	W-COR	W	R	EFF	FAR	AREA	XMN	PS	THETA	DELTA	H	SF-N,1	(N)
1	FAN	1110	518.7	14.568	217.946	216.041	1.0213	0.6777	0.00000	0.0	0.000	0.000	1.000	0.991	123.95	1.0191	1
2	DELP	0	523.3	14.878	13.494	13.600	0.9994	0.0000	0.00000	384.3	0.059	14.841	1.009	1.012	125.06	0.2349	2
3	HPC	0	523.3	14.869	13.502	13.601	4.5726	0.7182	0.00000	0.0	0.000	0.000	1.009	1.012	125.06	1.0241	3
4	COOL	0	915.1	67.990	3.600	12.538	0.0000	0.0000	0.00000	0.0	0.000	0.000	1.764	4.626	219.98	0.0000	4
5	DELP	0	915.1	67.990	3.600	12.538	1.0000	0.0000	0.00000	23.7	0.269	64.685	1.764	4.626	219.98	0.0000	5
6	DELP	0	915.1	67.990	3.600	12.538	0.9739	0.0000	0.00000	20.6	0.314	63.547	1.764	4.626	219.98	0.4000	6
7	HX C	0	915.1	66.213	3.301	11.197	1.0000	0.0000	0.00000	26.7	0.216	64.122	1.764	4.505	219.98	0.0000	7
8	BURN	0	907.9	66.213	3.288	11.197	0.9784	0.9990	0.00000	26.5	0.216	64.113	1.750	4.505	218.21	0.6799	8
9	COOL	0	1728.5	64.785	4.692	11.330	0.0000	0.0000	0.01192	0.0	0.000	0.000	3.333	4.408	436.04	0.0000	9
10	HPT	0	1682.6	64.785	5.011	12.054	3.4052	0.8940	0.01119	0.0	0.000	0.000	3.179	4.408	423.07	1.0046	10
11	PWRK	0	1277.6	19.025	14.614	12.054	0.0000	0.0000	0.01119	0.0	0.000	0.000	2.463	1.295	314.49	0.0007	11
12	COOL	0	1269.8	19.025	15.153	12.537	0.0000	0.0000	0.01076	0.0	0.000	0.000	2.448	1.295	312.31	0.0000	12
13	DELP	0	1245.7	19.025	15.855	13.244	0.9985	0.0000	0.01018	196.0	0.140	18.773	2.402	1.295	305.86	0.1163	13
14	LPT	330	1245.7	18.996	16.051	13.244	1.2781	0.8956	0.01018	0.0	0.000	0.000	2.372	1.293	305.86	1.0003	14
15	COOL	0	1175.6	14.863	19.716	13.244	0.0000	0.0000	0.01018	0.0	0.000	0.000	2.267	1.011	287.70	0.0000	15
16	DELP	0	1173.9	14.863	19.833	13.332	0.9997	0.0000	0.01011	406.6	0.084	14.792	2.263	1.011	287.26	0.0609	16
17	COOL	0	1173.9	14.858	19.839	13.332	0.0000	0.0000	0.01011	0.0	0.000	0.000	2.263	1.011	287.26	0.0000	17
18	NOZZ	110	1169.2	14.858	19.980	13.455	1.0110	0.0000	0.01002	1.0	0.000	0.000	2.254	1.011	286.00	0.0000	18
19	TH8	0	1165.8	14.696	20.171	13.455	1.0110	0.0000	0.01002	294.2	0.127	14.685	2.248	1.000	285.13	1.0000	19
20	EX9	0	1165.8	14.696	20.171	13.455	1.0000	0.0000	0.01002	294.2	0.127	14.696	2.248	1.000	285.13	0.0000	20
21	COOL	0	523.3	14.878	200.858	202.441	0.0000	0.0000	0.00000	0.0	0.000	0.000	1.009	1.012	125.06	0.0000	21
22	DELP	0	523.3	14.878	200.858	202.441	0.9998	0.0000	0.00000	3500.0	0.097	14.780	1.009	1.012	125.06	0.0378	22
23	HX H	0	523.3	14.874	200.908	202.441	1.0000	0.0185	0.00000	3500.0	0.097	14.776	1.009	1.012	125.06	0.0000	23
24	DELP	0	523.7	14.874	200.987	202.441	1.0000	0.0000	0.00000	3500.0	0.097	14.776	1.010	1.012	125.16	0.0000	24
25	NOZZ	110	523.7	14.874	200.987	202.441	1.0121	0.0000	0.00000	1.0	0.000	0.000	1.010	1.012	125.16	0.0000	25
26	TH18	0	521.9	14.696	203.070	202.441	1.0121	0.0000	0.00000	2813.3	0.131	14.693	1.006	1.000	124.73	1.0000	26
27	EX19	0	521.9	14.696	203.070	202.441	1.0000	0.0000	0.00000	2813.3	0.131	14.696	1.006	1.000	124.73	0.0000	27

```
S 1= RC-OA   =     4.6672 : S 2=EMAP(7) =    -7.2072 : S 3= EFF(23)=     0.0185

Y 1=      0.6788= COMP POLY EFF AT STATION  1                          : Y16=99999.0000=          0.000000 -            0.000000 +99999.0000
Y 2=      0.7704= COMP POLY EFF AT STATION  3                          : Y17=     0.1815=           P(25)  -   PS(26)             +     0.0000
Y 3= 1222.9404=          T(10)   -          459.669922 +      0.0000 : Y18=     5.3443=         YCOMPD17 *           29.440002 +     0.0000
Y 4=   108.5876=         H(10)   -    H(11)              +      0.0000 : Y19= 1000.0947=           FN      - YCOMPD18            +     0.0000
Y 5=    34.1552=       YCOMPD 4 / THETA 10               +      0.0000 : Y20=     0.4803=          WFE      / YCOMPD19            +     0.0000
Y 6=    18.1548=         H(14)   -    H(15)              +      0.0000 : Y21=    22.7744=           T(1)    **           0.500000 +     0.0000
Y 7=     7.6530=       YCOMPD 6 / THETA 14               +      0.0000 : Y22=     1.5633=         YCOMPD21 /    P(1)               +     0.0000
Y 8=     1.1876=        RNI(14) /             0.379900 +      0.0000 : Y23=   337.7471=         YCOMPD22 *    WD(1)              +     0.0000
Y 9= 1480.4524=       XNMAP 14 *            42.203995 +      0.0000 : Y39=     0.7035=          V-19     /    V-9                +     0.0000
Y10=     1.5402=       THETA 14 **            0.500000 +      0.0000 : Y40=     0.9950=         0.000000 -           0.000000 +     0.9950
Y11= 2280.1987=       YCOMPD 9 * YCOMPD10               +      0.0000 : Y41=     1.7010=          HP(14)  *            0.005000 +     0.0000
Y12=    10.0119=        FAR(9)   -             0.000000 +     10.0000 : Y42=     0.4114=           T(24)  -    T(23)             +     0.0000
Y15=     0.0000=       0.000000 -             0.000000 +      0.0000 : Y43= 3157.1899=          XN(1)   *            4.490000 +     0.0000

T 1=  375.0002  X=YCOMPD15 Z=          W=          ID=03/11/91 E=2 : T 3=**********  X=RMAP(14) Z=XNMAP 14 W=          ID=LPT X MN E=4
T 2= 2813.3372  X=  XM      Z=XNMAP  1 W=          ID=BYP AREA E=1 : T 4=     0.9912  X=YCOMPD23 Z=  XM      W=          ID=INLETREC E=1

P 1=YCOMPD41--> HPX(1)  : P 4=YTABLE 4--> DEFF

    --VARY-- ---HI--- ---LO---  (+)   OBJECT = TARGET   (+) LIM
C19= AREA(26)  2817.00  2183.00 1.00  AREA(26) YTABLE 2 0.00 L=1

MODE=YCOMPD19  PLA=  1000.000  ADDPLA=     0.000  PLA LIMIT= PLA
IDES=0  NVAR=10  MAX ERR# 9= 19.PS+A/P+A = 0.00037  MATRX= 3  LOOP= 20
IOMT  LOOPS=  1  MAX ERROR =        0.     = 0.00000
```

B L E E D S   A N D   L E A K A G E S

```
      FR - TO %W(FR)  %W(1)      W     T-R      P        H    DH/DHT :       FR - TO %W(FR)  %W(1)      W     T-R      P        H    DH/DHT
B 3=  3 - 12 0.0520 0.0023    0.707  798.7  46.816   191.50 0.7000 : B 7=   3 - OB 0.0000 0.0000    0.000  759.7  40.829   182.01 0.6000
B 5=  3 - 17 0.0090 0.0006    0.122  622.1  23.735   148.79 0.2500 : B 9=   3 - OB 0.0171 0.0011    0.233  720.5  35.348   172.52 0.5000
 STA  3 TOTL 0.0781 0.0049    1.062

      FR - TO %W(FR)  %W(1)      W     T-R      P        H    DH/DHT :       FR - TO %W(FR)  %W(1)      W     T-R      P        H    DH/DHT
B 1=  6 -  9 0.0577 0.0033    0.723  915.1  66.213   219.98 1.0000 : B 6=   6 - 21 0.0000 0.0000    0.000  915.1  66.213   219.98 1.0000
B 2=  6 - 11 0.0385 0.0022    0.483  915.1  66.213   257.91 1.0000 : B 8=   6 - OB 0.0038 0.0002    0.048  915.1  66.213   219.98 1.0000
B 4=  6 - 15 0.0070 0.0004    0.088  915.1  67.546   219.98 0.2500
 STA  6 TOTL 0.1070 0.0062    1.342

      FR - TO %W(FR)  %W(1)      W     T-R      P        H    DH/DHT
B10= 22 - OB 0.0000 0.0000    0.000  523.3  14.874   125.06 1.0000
 STA 22 TOTL 0.0000 0.0000    0.000
```

C O M P O N E N T   P E R F O R M A N C E

N	ID	BETA	XN	XN-MAP	HP	HPX/PHP	SF(N,2)	W-MAP	EFF-MAP	R-MAP	SMRELL	FLOW ID	EFF ID	MAPTYP
1	FAN	0.9771	703.160	25.793	338.50	1.70	0.0000	204.198	0.6651	1.0290	-0.052	QUIETENG	QUIETENG	1
3	HPC	1.0190	8459.453	74.088	1770.06	55.70	0.0000	21.894	0.7013	4.2480	29.584	0. 0.	0. 0.	1
10	HPT	0.0000	8459.453	98.537	1826.04	25.90	0.0000	0.984	0.8899	2.9268	6.156	JAN.2690	JAN.2690	1
14	LPT	0.0000	703.160	35.078	340.20	0.00	0.0000	0.711	0.8933	1.2781	4.225	ANALYTIC	ANALYTIC	1
14	LPT			RNISF(1,14),(2,14),(3,14),(4,14)=				1.00099	1.00233	1.00000	1.00000			

N O Z Z L E   P E R F O R M A N C E

NOZZLE	(N)	TYP	FG	FN	RJ	CFG	CD	AREA(TH)	V-EXIT	SF(TH,2)	SF(EX,2)	CFGT ID	CDT ID	MAPTYP
PRI (8-9)	18	1	86.79	86.79	1.0110	0.9918	0.9258	294.19	209.3	3.926	0.000	CFG MDXX	CD MDXX	1
SEC (18-19)	25	1	918.65	918.65	1.0121	0.9918	0.9263	2813.29	147.2	37.883	0.000	CFG MDXX	CD MDXX	1

F I N A L   E N G I N E   P E R F O R M A N C E

```
 BPR(1) RMIX(1) GAINMX(1) ANGMIX(1)     BPR(2) RMIX(2) GAINMX(2) ANGMIX(2)
14.8851  1.0011  0.0000     0.0000      0.0000  0.0000  0.0000    0.0000

   FG      FRAM    WFE   FARST   EPR    WAENG    WACOR   RCOA    FNR1   FNGF
 1005.4     0.0   480.4 .06775  1.020  216.041  217.946   4.67   1014. 1.0000

   FN      SFC     WFT    FHV   NODISS   EFFTH    FN/WA  EFFOA   WFTR1  WFTGF
 1005.4  0.4778   480.4 18550.    0     0.0402   4.6539 0.7160    485. 1.0000

WARNING: TABLE(S) EXTRAPOLATED. NON-ZERO NSI(S).

NPTOT = 48      NP1 = 16      NP2 = 16      NP3 = 16

FMT1
(/,2F10.0,F10.2,2F10.1,3F10.2,/,F10.1,2F10.3,F10.4,2F10.1,       ,          2F10.2
IPUNCH =   412         1       1385       450      1251      1553       827
          1178       734        122       123       530      1287      1257
           797      1148
 NAMES =  CASE       ALT        XM      DTAMB    V-KTAS  YCOMPD15   PAMB
        T-AMB(R)   HPX(3)   BLD(9)    BLD(10)    ERAM      WD(1)   WCOR(1)
           P(1)      T(1)


       1.        0.       0.00        0.0        0.0       0.00     14.70     518.67
    55.7     0.017      0.000     0.9912      216.0      217.9     14.57     518.67


FMT2
(F10.2,4F10.1,F10.2,F10.4,F10.2,/,8F10.2,)
IPUNCH =   314       651       665      1557      1323      1556      1558
           901       895       888      1174      1167        30        23
          1313      1306
 NAMES =  BPR(1)     FG       F-RAM   YCOMPD19   WFT     YCOMPD18 YCOMPD20
          RC-OA     R(25)     R(18)     T(27)    T(20)   AREA(27) AREA(20)
          WD(27)    WD(20)

    14.89    1005.4       0.0    1000.1     480.4      5.34    0.4803      4.67
     1.01      1.01    521.90   1165.76   2813.29    294.19    202.44     13.45

FMT3
(2F10.1,F10.2,4F10.4,F10.1/F10.3,F10.1,6F10.0,)
IPUNCH =  1459      1448      1157       413       416       415       418
           698      1578       274      1554      1554      1554      1554
          1554      1554
 NAMES =  XN(14)    XN(3)     T(10)    CD-18    CFG-19     CD-8     CFG-9
          HP(1)   YCOMPD40  BLDP(9)  YCOMPD16 YCOMPD16 YCOMPD16 YCOMPD16
        YCOMPD16 YCOMPD16

    703.2    8459.5   1682.61    0.9263    0.9918    0.9258    0.9918     338.5
    0.995      35.3    99999.    99999.    99999.    99999.    99999.    99999.
```

```
TERMAP (VER 12)  TITLE=  NASA LOW NOISE MODEL (FLOW SCALE DOWN OF MDXX BPR=14 SHORT BYP DUCT MODEL)        DATE= 05-26-92 CASE=    2.0
(CMS  04-06-92) STITLE= SL, 0.25 MN, TAKE-OFF, FAN CORR N=85.3 PCT                                          TIME= 16:15:20 PAGE=      8

   ALT   PAMB   TAMBF  TAMBR  DTAMB DTAMTP PRELHM  KTAS    KCAS    XM     RPR   DEFF   ERAM    P1     T1R   DEFTIP ERAMTP  PTIP  TTIPR
    0. 14.696  59.00 518.67   0.0    0.0    0.0  165.4   165.3  0.250  1.039 0.9950 0.9950 15.272 525.16 0.0000 0.0000  0.000   0.0

(N) ID    NSI    T-R      P      W-COR      W        R       EFF      FAR      AREA    XMN      PS     THETA  DELTA     H    SF-N,1  (N)
--- --    ---    ---      -      -----      -        -       ---      ---      ----    ---      --     -----  -----     -    ------  ---
 1 FAN     0    525.2   15.272  828.500  855.644  1.2624  0.8717  0.00000     0.0  0.000    0.000  1.013  1.039  125.51  1.0191    1
 2 DELP    0    566.7   19.280   45.775   57.452  0.9932  0.0000  0.00000   384.3  0.206   18.718  1.093  1.312  135.47  0.2349    2
 3 HPC     0    566.7   19.148   46.105   57.469 19.6052  0.8578  0.00000     0.0  0.000    0.000  1.093  1.303  135.47  1.0241    3
 4 COOL    0   1412.7  375.394    3.423   52.981  0.0000  0.0000  0.00000     0.0  0.000    0.000  2.724 25.544  346.24  0.0000    4
 5 DELP    0   1412.7  375.394    3.423   52.981  1.0000  0.0000  0.00000    23.7  0.258  358.966  2.724 25.544  346.24  0.0000    5
 6 DELP    0   1412.7  375.394    3.423   52.981  0.9765  0.0000  0.00000    20.6  0.300  353.349  2.724 25.544  346.24  0.4000    6
 7 HX C    0   1412.7  366.576    3.130   47.312  1.0000  0.0000  0.00000    26.7  0.206  356.194  2.724 24.944  346.24  0.0000    7
 8 BURN    0   1397.1  366.576    3.113   47.312  0.9807  0.9990  0.00000    26.5  0.206  356.182  2.694 24.944  342.16  0.6799    8
 9 COOL    0   2929.2  359.509    4.714   48.523  0.0000  0.0000  0.02559     0.0  0.000    0.000  5.648 24.463  798.08  0.0000    9
10 HPT     0   2847.1  359.509    5.085   51.579  4.8261  0.8988  0.02403     0.0  0.000    0.000  5.306 24.463  771.30  1.0046   10
11 PWRK    0   2069.5   74.493   20.326   51.579  0.0000  0.0000  0.02403     0.0  0.000    0.000  3.990  5.069  539.29  0.0007   11
12 COOL    0   2055.2   74.493   21.056   53.619  0.0000  0.0000  0.02310     0.0  0.000    0.000  3.962  5.069  534.56  0.0000   12
13 DELP    0   2011.8   74.493   21.994   56.607  0.9970  0.0000  0.02185   196.0  0.200   72.568  3.879  5.069  521.28  0.1163   13
14 LPT     0   2011.8   74.269   22.570   56.605  4.0198  0.9278  0.02185     0.0  0.000    0.000  3.777  5.054  521.29  1.0003   14
15 COOL    0   1472.7   18.476   75.871   56.605  0.0000  0.0000  0.02185     0.0  0.000    0.000  2.839  1.257  370.01  0.0000   15
16 DELP    0   1472.3   18.476   76.358   56.976  0.9953  0.0000  0.02171   406.6  0.348   17.055  2.839  1.257  369.85  0.0609   16
17 COOL    0   1472.3   18.389   76.717   56.976  0.0000  0.0000  0.02171     0.0  0.000    0.000  2.839  1.251  369.85  0.0000   17
18 NOZZ    0   1466.6   18.389   77.263   57.493  1.2513  0.0000  0.02151     1.0  0.000    0.000  2.828  1.251  368.22  0.0000   18
19  TH8    0   1385.3   14.696   93.960   57.493  1.2513  0.0000  0.02151   294.2  0.587   14.695  2.671  1.000  346.22  1.0000   19
20  EX9    0   1385.3   14.696   93.960   57.493  1.0000  0.0000  0.02151   294.2  0.587   14.696  2.671  1.000  346.22  0.0000   20
--- --    ---    ---      -      -----      -        -       ---      ---      ----    ---      --     -----  -----     -    ------  ---
21 COOL    0    566.7   19.280  635.961  798.192  0.0000  0.0000  0.00000     0.0  0.000    0.000  1.093  1.312  135.47  0.0000   21
22 DELP    0    566.7   19.280  635.961  798.192  0.9973  0.0000  0.00000  3500.0  0.326   17.908  1.093  1.312  135.47  0.0378   22
23 HX H    0    566.7   19.228  637.679  798.192  1.0000  0.0185  0.00000  3500.0  0.327   17.852  1.093  1.308  135.47  0.0000   23
24 DELP    0    567.7   19.228  638.247  798.192  1.0000  0.0000  0.00000  3500.0  0.328   17.849  1.095  1.308  135.71  0.0000   24
25 NOZZ    0    567.7   19.228  638.247  798.192  1.3084  0.0000  0.00000     1.0  0.000    0.000  1.095  1.308  135.71  0.0000   25
26 TH18    0    525.7   14.696  803.565  798.192  1.3084  0.0000  0.00000  2272.2  0.632   14.694  1.014  1.000  125.63  1.0000   26
27 EX19    0    525.7   14.696  803.565  798.192  1.0000  0.0000  0.00000  2272.2  0.632   14.696  1.014  1.000  125.63  0.0000   27
--- --    ---    ---      -      -----      -        -       ---      ---      ----    ---      --     -----  -----     -    ------  ---

S 1= RC-OA   =    24.5800 : S 2=EMAP(7) =  -15.6084 : S 3= EFF(23)=     0.0185

Y 1=     0.8759= COMP POLY EFF AT STATION  1                          : Y16=99999.0000=          0.000000 -             0.000000 +99999.0000
Y 2=     0.9036= COMP POLY EFF AT STATION  3                          : Y17=    4.5341=            P(25)  -  PS(26)             +     0.0000
Y 3= 2387.4077=            T(10)   -          459.669922 +    0.0000 : Y18=  133.4828=          YCOMPD17 *           29.440002 +     0.0000
Y 4=  232.0132=            H(10)   -    H(11)              +    0.0000 : Y19=11808.4648=            FN     - YCOMPD18            +     0.0000
Y 5=   43.7268=          YCOMPD 4 / THETA 10               +    0.0000 : Y20=    0.3690=           WFE     / YCOMPD19            +     0.0000
Y 6=  151.2820=            H(14)   -    H(15)              +    0.0000 : Y21=   22.9165=            T(1)   **          0.500000 +     0.0000
Y 7=   40.0546=          YCOMPD 6 / THETA 14               +    0.0000 : Y22=    1.5005=          YCOMPD21 /    P(1)             +     0.0000
Y 8=    2.7245=            RNI(14) /            0.379900 +    0.0000 : Y23= 1283.9104=          YCOMPD22 *    WD(1)            +    -0.0000
Y 9= 3904.2139=          XNMAP 14 *           42.203995 +    0.0000 : Y39=    0.6769=            V-19   /    V-9              +     0.0000
Y10=    1.9434=          THETA 14 **           0.500000 +    0.0000 : Y40=    0.9950=          0.000000 -            0.000000 +     0.9950
Y11= 7587.5430=          YCOMPD 9 * YCOMPD10               +    0.0000 : Y41=   60.5795=           HP(14)  *            0.005000 +     0.0000
Y12=   10.0256=            FAR(9)  -            0.000000 +   10.0000 : Y42=    1.0090=            T(24)  -    T(23)            +     0.0000
Y15=    0.0000=          0.000000 -            0.000000 +    0.0000 : Y43=10505.7969=            XN(1)  *            4.490000 +     0.0000

T 1=  375.0002  X=YCOMPD15 Z=           W=            ID=03/11/91 E=2 : T 3=     0.3200  X=RMAP(14) Z=XNMAP 14 W=          ID=LPT X MN E=1
T 2= 2272.1541  X=  XM      Z=XNMAP  1 W=            ID=BYP AREA E=3 : T 4=     0.9950  X=YCOMPD23 Z=  XM     W=          ID=INLETREC E=1

P 1=YCOMPD41--> HPX(1)   : P 4=YTABLE 4--> DEFF

     --VARY-- ---HI--- ---LO---  (+)   OBJECT = TARGET   (+) LIM
C19= AREA(26)  2817.00  2183.00 1.00  AREA(26) YTABLE 2 0.00 L=1

MODE=XNMAP  1  PLA=    85.300  ADDPLA=     0.000  PLA LIMIT= PLA
IDES=0  NVAR=10  MAX ERR# 2=  3.WD+10/WS = 0.00026  MATRX= 2  LOOP= 14
IOMT  LOOPS=  1  MAX ERROR =       0.     = 0.00000
```

B L E E D S   A N D   L E A K A G E S

```
      FR - TO %W(FR)  %W(1)      W     T-R     P        H    DH/DHT :      FR - TO %W(FR)  %W(1)      W     T-R     P        H    DH/DHT
B 3=   3 - 12 0.0520 0.0035   2.988 1167.3 198.045  283.01 0.7000 : B 7=   3 - OB 0.0000 0.0000   0.000 1083.9 154.944  261.93 0.6000
B 5=   3 - 17 0.0090 0.0006   0.517  785.0  54.277  188.16 0.2500 : B 9=   3 - OB 0.0171 0.0011   0.983  999.5 118.751  240.85 0.5000
 STA   3 TOTL 0.0781 0.0052   4.488

      FR - TO %W(FR)  %W(1)      W     T-R     P        H    DH/DHT :      FR - TO %W(FR)  %W(1)      W     T-R     P        H    DH/DHT
B 1=   6 -  9 0.0577 0.0036   3.057 1412.7 366.576  346.24 1.0000 : B 6=   6 - 21 0.0000 0.0000   0.000 1412.7 366.576  346.24 1.0000
B 2=   6 - 11 0.0385 0.0024   2.040 1412.7 366.576  415.10 1.0000 : B 8=   6 - OB 0.0038 0.0002   0.201 1412.7 366.576  346.24 1.0000
B 4=   6 - 15 0.0070 0.0004   0.371 1412.7 373.189  346.24 0.2500
 STA   6 TOTL 0.1070 0.0066   5.669

      FR - TO %W(FR)  %W(1)      W     T-R     P        H    DH/DHT
B10=  22 - OB 0.0000 0.0000   0.000  566.7  19.228  135.47 1.0000
 STA  22 TOTL 0.0000 0.0000   0.000
```

C O M P O N E N T   P E R F O R M A N C E

```
  N  ID      BETA       XN       XN-MAP      HP     HPX/PHP  SF(N,2)    W-MAP   EFF-MAP    R-MAP    SMRELL   FLOW ID    EFF ID   MAPTYP
  1 FAN    0.8548  2339.822    85.297  12055.98    60.58   0.0000   776.238   0.8554    1.3573   19.757  QUIETENG   QUIETENG      1
  3 HPC    1.0161 11398.902    95.934  16608.38   127.10   0.0000    74.761   0.8376   17.9148   21.756   0.  0.     0.  0.       1
 10 HPT    0.0000 11398.902   102.778  16732.90   198.74   0.0000     0.999   0.8947    4.0649    6.283  JAN.2690   JAN.2690      1
 14 LPT    0.0000  2339.822    92.508  12115.91     0.00   0.0000     0.998   0.9212    4.0198    6.331  ANALYTIC   ANALYTIC      1
 14 LPT                      RNISF(1,14),(2,14),(3,14),(4,14)=   1.00250  1.00693   1.00000  1.00000
```

N O Z Z L E   P E R F O R M A N C E

```
 NOZZLE       (N)  TYP     FG        FN       RJ      CFG      CD    AREA(TH)  V-EXIT  SF(TH,2) SF(EX,2)   CFGT ID     CDT ID   MAPTYP
PRI (8-9)     18    1    1862.15   1363.68  1.2513  0.9929  0.9370    294.19  1049.6     0.338    0.000  CFG MDXX   CD  MDXX      1
SEC (18-19)   25    1   17503.66  10578.27  1.3084  0.9932  0.9438   2272.17   710.4     2.623    0.000  CFG MDXX   CD  MDXX      1
```

F I N A L   E N G I N E   P E R F O R M A N C E

```
 BPR(1) RMIX(1) GAINMX(1) ANGMIX(1)    BPR(2) RMIX(2) GAINMX(2) ANGMIX(2)
13.8932  1.0456  0.0000     0.0000      0.0000  0.0000  0.0000     0.0000

   FG      FRAM     WFE   FARST   EPR     WAENG    WACOR   RCOA    FNR1   FNGF
19365.8  7423.9  4357.8 .06775  1.204  855.644  828.500  24.58  11491. 1.0000

   FN      SFC      WFT    FHV   NODISS   EFFTH    FN/WA  EFFOA   WFTR1  WFTGF
11941.9  0.3649  4357.8 18550.    0     0.3553  13.9567 0.8481   4167. 1.0000

WARNING: TABLE(S) EXTRAPOLATED.

NPTOT = 48      NP1 = 16      NP2 = 16      NP3 = 16

FMT1
(/,2F10.0,F10.2,2F10.1,3F10.2,/,F10.1,2F10.3,F10.4,2F10.1,      ,          2F10.2
IPUNCH =    412          1       1385       450       1251      1553       827
           1178        734        122       123        530      1287      1257
            797       1148
 NAMES =  CASE       ALT         XM       DTAMB     V-KTAS   YCOMPD15   PAMB
        T-AMB(R)   HPX(3)    BLD(9)    BLD(10)     ERAM      WD(1)    WCOR(1)
           P(1)      T(1)


        2.          0.        0.25        0.0       165.4      0.00      14.70     518.67
    127.1       0.017       0.000      0.9950      855.6     828.5      15.27     525.16


FMT2
(F10.2,4F10.1,F10.2,F10.4,F10.2,/,8F10.2,)
IPUNCH =    314        651        665      1557       1323      1556      1558
            901        895        888      1174       1167        30        23
           1313       1306
 NAMES =  BPR(1)     FG        F-RAM    YCOMPD19    WFT      YCOMPD18  YCOMPD20
          RC-OA      R(25)     R(18)     T(27)      T(20)    AREA(27)  AREA(20)
          WD(27)     WD(20)

    13.89    19365.8     7423.9    11808.5     4357.8     133.48     0.3690      24.58
     1.31       1.25     525.68    1385.28    2272.17     294.19     798.19      57.49

FMT3
(2F10.1,F10.2,4F10.4,F10.1/F10.3,F10.1,6F10.0,)
IPUNCH =   1459       1448       1157       413        416       415       418
            698       1578        274      1554       1554      1554      1554
           1554       1554
 NAMES =  XN(14)     XN(3)      T(10)    CD-18     CFG-19     CD-8      CFG-9
          HP(1)    YCOMPD40  BLDF(9)   YCOMPD16  YCOMPD16  YCOMPD16  YCOMPD16
        YCOMPD16  YCOMPD16

   2339.8    11398.9    2847.08     0.9438     0.9932     0.9370     0.9929    12056.0
    0.995      118.8     99999.     99999.     99999.     99999.     99999.     99999.
```

```
TERMAP (VER 12)  TITLE=  NASA LOW NOISE MODEL (FLOW SCALE DOWN OF MDXX BPR=14 SHORT BYP DUCT MODEL)        DATE= 05-26-92 CASE=    3.0
(CMS  04-06-92) STITLE= 1500 FT, 0.39 MN, TAKE-OFF, FAN CORR N=86.9 PCT                                    TIME= 16:15:20 PAGE=      9

  ALT    PAMB    TAMBF  TAMBR   DTAMB DTAMTP PRELHM  KTAS    KCAS    XM      RPR   DEFF    ERAM     P1     T1R    DEFTIP ERAMTP  PTIP   TTIPR
 1500. 13.917   53.65 513.32     0.0    0.0    0.0  256.7   251.3  0.390  1.105 0.9950 0.9950 15.378 528.96 0.0000 0.0000  0.000    0.0

(N) ID    NSI     T-R       P        W-COR       W        R        EFF       FAR        AREA    XMN       PS     THETA   DELTA     H      SF-N,1   (N)
--- --    ---     ---       -        -----       -        -        ---       ---        ----    ---       --     -----   -----     -      ------   ---
 1 FAN     0     529.0    15.378   864.157   895.409   1.2776   0.8854   0.00000       0.0   0.000     0.000   1.020   1.046   126.42   1.0191     1
 2 DELP    0     572.3    19.647    46.692    59.425   0.9929   0.0000   0.00000     384.3   0.210    19.050   1.103   1.337   136.82   0.2349     2
 3 HPC     0     572.3    19.507    47.038    59.437  20.1111   0.8585   0.00000       0.0   0.000     0.000   1.103   1.327   136.82   1.0241     3
 4 COOL    0    1435.0   392.302     3.414    54.795   0.0000   0.0000   0.00000       0.0   0.000     0.000   2.767  26.694   352.06   0.0000     4
 5 DELP    0    1435.0   392.302     3.414    54.795   1.0000   0.0000   0.00000      23.7   0.257   375.227   2.767  26.694   352.06   0.0000     5
 6 DELP    0    1435.0   392.302     3.414    54.795   0.9766   0.0000   0.00000      20.6   0.299   369.391   2.767  26.694   352.07   0.4000     6
 7 HX C    0    1435.0   383.138     3.122    48.932   1.0000   0.0000   0.00000      26.7   0.206   372.348   2.767  26.071   352.07   0.0000     7
 8 BURN    0    1419.1   383.138     3.105    48.932   0.9808   0.9990   0.00000      26.5   0.206   372.335   2.736  26.071   347.90   0.6799     8
 9 COOL    0    2985.8   375.793     4.712    50.220   0.0000   0.0000   0.02632       0.0   0.000     0.000   5.757  25.571   816.29   0.0000     9
10 HPT     0    2902.0   375.793     5.085    53.384   4.8298   0.8987   0.02473       0.0   0.000     0.000   5.406  25.571   788.79   1.0046    10
11 PWRK    0    2111.8    77.808    20.346    53.384   0.0000   0.0000   0.02473       0.0   0.000     0.000   4.071   5.294   552.05   0.0007    11
12 COOL    0    2096.9    77.808    21.075    55.494   0.0000   0.0000   0.02376       0.0   0.000     0.000   4.043   5.294   547.11   0.0000    12
13 DELP    0    2052.5    77.808    22.012    58.584   0.9970   0.0000   0.02248     196.0   0.200    75.793   3.957   5.294   533.41   0.1163    13
14 LPT     0    2052.5    77.573    22.601    58.585   4.2551   0.9285   0.02248       0.0   0.000     0.000   3.851   5.278   533.41   1.0003    14
15 COOL    0    1485.0    18.231    79.912    58.585   0.0000   0.0000   0.02248       0.0   0.000     0.000   2.863   1.241   373.60   0.0000    15
16 DELP    0    1484.7    18.231    80.427    58.969   0.9947   0.0000   0.02233     406.6   0.370    16.657   2.863   1.241   373.46   0.0609    16
17 COOL    0    1484.7    18.135    80.852    58.969   0.0000   0.0000   0.02233       0.0   0.000     0.000   2.863   1.234   373.46   0.0000    17
18 NOZZ    0    1479.0    18.135    81.427    59.504   1.3031   0.0000   0.02213       1.0   0.000     0.000   2.851   1.234   371.81   0.0000    18
19  TH8    0    1382.8    13.917   102.599    59.504   1.3031   0.0000   0.02213     294.2   0.640    13.917   2.666   0.947   345.75   1.0000    19
20  EX9    0    1382.8    13.917   102.599    59.504   1.0000   0.0000   0.02213     294.2   0.640    13.917   2.666   0.947   345.75   0.0000    20
--- --    ---     ---       -        -----       -        -        ---       ---        ----    ---       --     -----   -----     -      ------   ---
21 COOL    0     572.3    19.647   656.864   835.984   0.0000   0.0000   0.00000       0.0   0.000     0.000   1.103   1.337   136.82   0.0000    21
22 DELP    0     572.3    19.647   656.865   835.984   0.9971   0.0000   0.00000    3500.0   0.339    18.146   1.103   1.337   136.82   0.0378    22
23 HX H    0     572.3    19.590   658.769   835.984   1.0000   0.0185   0.00000    3500.0   0.340    18.084   1.103   1.333   136.82   0.0000    23
24 DELP    0     573.3    19.590   659.354   835.984   1.0000   0.0000   0.00000    3500.0   0.340    18.081   1.105   1.333   137.07   0.0000    24
25 NOZZ    0     573.3    19.590   659.354   835.984   1.4077   0.0000   0.00000       1.0   0.000     0.000   1.105   1.333   137.07   0.0000    25
26 TH18    0     519.9    13.917   883.852   835.984   1.4077   0.0000   0.00000    2190.7   0.717    13.911   1.002   0.947   124.25   1.0000    26
27 EX19    0     519.9    13.917   883.852   835.984   1.0000   0.0000   0.00000    2190.7   0.717    13.917   1.002   0.947   124.25   0.0000    27
--- --    ---     ---       -        -----       -        -        ---       ---        ----    ---       --     -----   -----     -      ------   ---

S 1= RC-OA   =    25.5108 : S 2=EMAP(7) =   -15.9184 : S 3= EFF(23)=     0.0185

Y 1=     0.8893= COMP POLY EFF AT STATION  1                         : Y16=99999.0000=          0.000000 -                0.000000 +99999.0000 ,
Y 2=     0.9043= COMP POLY EFF AT STATION  3                         : Y17=     5.6797=           P(25)   -   PS(26)              +      0.0000
Y 3= 2442.2905=           T(10)   -          459.669922 +    0.0000 : Y18=   167.2098=          YCOMPD17 *           29.440002 +      0.0000
Y 4=  236.7432=           H(10)   -    H(11)            +    0.0000 : Y19=10558.1445=            FN      - YCOMPD18             +      0.0000
Y 5=   43.7947=        YCOMPD 4 / THETA 10              +    0.0000 : Y20=     0.4392=           WFE      / YCOMPD19             +      0.0000
Y 6=  159.8191=           H(14)   -    H(15)            +    0.0000 : Y21=    22.9991=            T(1)    **           0.500000 +      0.0000
Y 7=   41.5008=        YCOMPD 6 / THETA 14              +    0.0000 : Y22=     1.4956=          YCOMPD21 /    P(1)               +      0.0000
Y 8=    2.7844=           RNI(14) /           0.379900 +    0.0000 : Y23= 1339.1694=          YCOMPD22 *    WD(1)              +     -0.0000
Y 9= 3952.7637=        XNMAP 14 *           42.203995 +    0.0000 : Y39=     0.7013=            V-19    /    V-9                +      0.0000
Y10=    1.9624=        THETA 14 **           0.500000 +    0.0000 : Y40=     0.9950=          0.000000 -            0.000000 +      0.9950
Y11= 7756.8750=        YCOMPD 9 * YCOMPD10             +    0.0000 : Y41=    66.2366=           HP(14)   *            0.005000 +      0.0000
Y12=   10.0263=           FAR(9)  -            0.000000 +   10.0000 : Y42=     1.0188=            T(24)   -    T(23)              +      0.0000
Y15=    0.0000=        0.000000 -              0.000000 +    0.0000 : Y43=10740.2617=           XN(1)    *            4.490000 +      0.0000

T 1=  375.0002  X=YCOMPD15 Z=             W=            ID=03/11/91 E=2 : T 3=     0.3401  X=RMAP(14) Z=XNMAP 14 W=            ID=LPT X MN E=1
T 2= 2189.8437  X=  XM      Z=XNMAP   1 W=            ID=BYP AREA E=3 : T 4=     0.9950  X=YCOMPD23 Z=   XM      W=            ID=INLETREC E=1

P 1=YCOMPD41--> HPX(1)   : P 4=YTABLE 4--> DEFF

    --VARY-- ---HI--- ---LO---  (+)   OBJECT = TARGET   (+) LIM
C19= AREA(26)  2817.00  2183.00 1.00  AREA(26) YTABLE 2 0.00 L=1

MODE=XNMAP  1  PLA=    86.900  ADDPLA=     0.000  PLA LIMIT= PLA
IDES=0  NVAR=10  MAX ERR# 1= 19.CONSTR.   = 0.00038  MATRX= 0  LOOP= 14
IOMT  LOOPS=  1  MAX ERROR =        0.     = 0.00000
                          B L E E D S   A N D   L E A K A G E S
                          -------------------------------------
     FR - TO %W(FR)  %W(1)      W     T-R      P        H    DH/DHT :        FR - TO %W(FR)  %W(1)      W     T-R      P        H    DH/DHT
B 3=  3 - 12 0.0520 0.0035   3.091 1185.0 206.151   287.49 0.7000 : B 7=  3 - OB 0.0000 0.0000   0.000 1099.9 161.014   265.97 0.6000
B 5=  3 - 17 0.0090 0.0006   0.535  795.1  55.923   190.63 0.2500 : B 9=  3 - OB 0.0171 0.0011   1.016 1013.9 123.163   244.44 0.5000
 STA  3 TOTL 0.0781 0.0052   4.642

     FR - TO %W(FR)  %W(1)      W     T-R      P        H    DH/DHT :        FR - TO %W(FR)  %W(1)      W     T-R      P        H    DH/DHT
B 1=  6 -  9 0.0577 0.0035   3.162 1435.0 383.138   352.07 1.0000 : B 6=  6 - 21 0.0000 0.0000   0.000 1435.0 383.138   352.07 1.0000
B 2=  6 - 11 0.0385 0.0024   2.110 1435.0 383.138   422.11 1.0000 : B 8=  6 - OB 0.0038 0.0002   0.208 1435.0 383.138   352.07 1.0000
B 4=  6 - 15 0.0070 0.0004   0.384 1435.0 390.011   352.07 0.2500
 STA  6 TOTL 0.1070 0.0065   5.863

     FR - TO %W(FR)  %W(1)      W     T-R      P        H    DH/DHT
B10= 22 - OB 0.0000,0.0000   0.000  572.3  19.590   136.82 1.0000
 STA 22 TOTL 0.0000 0.0000   0.000
                         C O M P O N E N T   P E R F O R M A N C E
                         -----------------------------------------
  N  ID        BETA      XN        XN-MAP     HP      HPX/PHP  SF(N,2)    W-MAP  EFF-MAP   R-MAP    SMRELL   FLOW ID    EFF ID   MAPTYP
  1 FAN      0.8813  2392.041    86.887  13177.75    66.24   0.0000  809.645   0.8688   1.3780   21.164  QUIETENG  QUIETENG     1
  3 HPC      1.0146 11496.125    96.275  17541.55   127.10   0.0000   76.274   0.8383  18.3747   21.559   0.  0.    0.  0.      1
 10 HPT      0.0000 11496.125   102.693  17672.30   209.06   0.0000    0.999   0.8946   4.0679    6.280  JAN.2690  JAN.2690     1
 14 LPT      0.0000  2392.041    93.659  13247.33     0.00   0.0000    1.000   0.9218   4.2551    6.366  ANALYTIC  ANALYTIC     1
 14 LPT                          RNISF(1,14),(2,14),(3,14),(4,14)=  1.00250  1.00695  1.00000  1.00000
                            N O Z Z L E   P E R F O R M A N C E
                            -----------------------------------
   NOZZLE      (N)  TYP      FG        FN       RJ      CFG      CD    AREA(TH)  V-EXIT  SF(TH,2) SF(EX,2)   CFGT ID     CDT ID   MAPTYP
PRI (8-9)      18    1    2098.30   1298.14   1.3031  0.9932  0.9391   294.19   1142.4    0.357    0.000  CFG MDXX   CD  MDXX     1
SEC (18-19)    25    1   20683.84   9427.22   1.4077  0.9937  0.9498  2190.67    801.1    2.684    0.000  CFG MDXX   CD  MDXX     1
                        F I N A L   E N G I N E   P E R F O R M A N C E
                        -----------------------------------------------
  BPR(1) RMIX(1) GAINMX(1) ANGMIX(1)    BPR(2) RMIX(2) GAINMX(2) ANGMIX(2)
 14.0679  1.0802  0.0000    0.0000      0.0000  0.0000  0.0000    0.0000

   FG       FRAM     WFE   FARST   EPR    WAENG    WACOR   RCOA    FNR1   FNGF
 22782.1 12056.8  4637.2 .06775  1.179  895.409  864.157  25.51  10250. 1.0000

   FN       SFC     WFT     FHV   NODISS   EFFTH    FN/WA  EFFOA   WFTR1  WFTGF
 10725.4  0.4324  4637.2 18550.    0      0.3729  11.9782 0.8501   4388. 1.0000

WARNING: TABLE(S) EXTRAPOLATED.

NPTOT = 48     NP1 = 16-    NP2 = 16     NP3 = 16

FMT1
(/,2F10.0,F10.2,2F10.1,3F10.2,/,F10.1,2F10.3,F10.4,2F10.1,     ,          2F10.2
IPUNCH =    412         1       1385       450      1251      1553       827
           1178       734        122       123       530      1287      1257
            797      1148
 NAMES =  CASE       ALT        XM       DTAMB    V-KTAS   YCOMPD15   PAMB
        T-AMB(R)   HPX(3)   BLD(9)    BLD(10)    ERAM      WD(1)    WCOR(1)
           P(1)      T(1)


      3.      1500.      0.39       0.0       256.7      0.00      13.92     513.32
  127.1       0.017      0.000     0.9950     895.4     864.2      15.38     528.96


FMT2
(F10.2,4F10.1,F10.2,F10.4,F10.2,/,8F10.2,)
IPUNCH =    314       651       665      1557      1323      1556      1558
            901       895       888      1174      1167        30        23
           1313      1306
 NAMES =  BPR(1)     FG       F-RAM   YCOMPD19   WFT      YCOMPD18  YCOMPD20
          RC-OA     R(25)     R(18)     T(27)     T(20)   AREA(27)  AREA(20)
          WD(27)    WD(20)

    14.07    22782.1    12056.8    10558.1    4637.2    167.21    0.4392     25.51
     1.41       1.30     519.91    1382.80   2190.67    294.19    835.98     59.50

FMT3
(2F10.1,F10.2,4F10.4,F10.1/F10.3,F10.1,6F10.0,)
IPUNCH =   1459      1448      1157       413       416       415       418
            698      1578       274      1554      1554      1554      1554
           1554      1554
 NAMES =  XN(14)    XN(3)     T(10)    CD-18    CFG-19    CD-8      CFG-9
          HP(1)   YCOMPD40  BLDP(9)  YCOMPD16 YCOMPD16 YCOMPD16 YCOMPD16
        YCOMPD16 YCOMPD16

   2392.0    11496.1    2901.96    0.9498    0.9937    0.9391    0.9932    13177.8
    0.995      123.2     99999.     99999.    99999.    99999.    99999.     99999.
```

```
TERMAP (VER 12)  TITLE=  NASA LOW NOISE MODEL (FLOW SCALE DOWN OF MDXX BPR=14 SHORT BYP DUCT MODEL)        DATE= 05-26-92 CASE=    4.0
(CMS  04-06-92) STITLE= 4000 FT. 0.41 MN, MAX CLIMB, RIT=2355 F                                              TIME= 16:15:20 PAGE=     10

  ALT   PAMB   TAMBF  TAMBR  DTAMB DTAMTP PRELHM  KTAS   KCAS   XM    RPR   DEFF   ERAM    P1     T1R   DEFTIP ERAMTP  PTIP  TTIPR
 4000. 12.692  44.74 504.41   0.0    0.0    0.0  267.5  252.7  0.410 1.117 0.9950 0.9950 14.178 521.39 0.0000 0.0000 0.000   0.0
```

(N) ID	NSI	T-R	P	W-COR	W	R	EFF	FAR	AREA	XMN	PS	THETA	DELTA	H	SF-N.1	(N)
1 FAN	0	521.4	14.178	845.521	813.593	1.2566	0.8832	0.00000	0.0	0.000	0.000	1.005	0.965	124.61	1.0191	1
2 DELP	0	561.2	17.816	45.605	53.148	0.9932	0.0000	0.00000	384.3	0.205	17.300	1.082	1.212	134.16	0.2349	2
3 HPC	0	561.2	17.695	45.917	53.147	19.1788	0.8572	0.00000	0.0	0.000	0.000	1.082	1.204	134.17	1.0241	3
4 COOL	0	1392.4	339.365	3.420	48.199	0.0000	0.0000	0.00000	0.0	0.000	0.000	2.685	23.092	340.93	0.0000	4
5 DELP	0	1392.4	339.365	3.420	48.199	1.0000	0.0000	0.00000	23.7	0.257	324.544	2.685	23.092	340.93	0.0000	5
6 DELP	0	1392.4	339.365	3.420	48.199	0.9766	0.0000	0.00000	20.6	0.300	319.478	2.685	23.092	340.93	0.4000	6
7 HX C	0	1392.4	331.410	3.127	43.042	1.0000	0.0000	0.00000	26.7	0.206	322.044	2.685	22.551	340.93	0.0000	7
8 BURN	0	1377.1	331.410	3.110	43.042	0.9808	0.9990	0.00000	26.5	0.206	322.032	2.655	22.551	336.94	0.6799	8
9 COOL	0	2896.4	325.034	4.715	44.130	0.0000	0.0000	0.02527	0.0	0.000	0.000	5.584	22.117	787.69	0.0000	9
10 HPT	0	2814.9	325.034	5.085	46.909	4.8303	0.8988	0.02374	0.0	0.000	0.000	5.247	22.117	761.21	1.0046	10
11 PWRK	0	2044.3	67.291	20.339	46.909	0.0000	0.0000	0.02374	0.0	0.000	0.000	3.941	4.579	531.80	0.0007	11
12 COOL	0	2030.0	67.291	21.070	48.764	0.0000	0.0000	0.02282	0.0	0.000	0.000	3.914	4.579	527.12	0.0000	12
13 DELP	0	1986.4	67.291	22.023	51.528	0.9970	0.0000	0.02157	196.0	0.200	65.547	3.830	4.579	513.81	0.1163	13
14 LPT	0	1986.4	67.088	22.594	51.527	4.1289	0.9278	0.02157	0.0	0.000	0.000	3.730	4.565	513.81	1.0003	14
15 COOL	0	1444.1	16.248	77.763	51.527	0.0000	0.0000	0.02157	0.0	0.000	0.000	2.784	1.106	362.13	0.0000	15
16 DELP	0	1443.8	16.248	78.264	51.864	0.9951	0.0000	0.02142	406.6	0.358	14.929	2.784	1.106	361.99	0.0609	16
17 COOL	0	1443.8	16.168	78.653	51.864	0.0000	0.0000	0.02142	0.0	0.000	0.000	2.784	1.100	361.99	0.0000	17
18 NOZZ	0	1438.1	16.168	79.222	52.342	1.2738	0.0000	0.02122	1.0	0.000	0.000	2.773	1.100	360.38	0.0000	18
19 TH8	0	1351.9	12.692	97.845	52.342	1.2738	0.0000	0.02122	294.2	0.610	12.697	2.606	0.864	337.16	1.0000	19
20 EX9	0	1351.9	12.692	97.845	52.342	1.0000	0.0000	0.02122	294.2	0.610	12.692	2.606	0.864	337.16	0.0000	20
21 COOL	0	561.2	17.816	652.516	760.445	0.0000	0.0000	0.00000	0.0	0.000	0.000	1.082	1.212	134.16	0.0000	21
22 DELP	0	561.2	17.816	652.516	760.445	0.9972	0.0000	0.00000	3500.0	0.336	16.475	1.082	1.212	134.16	0.0378	22
23 HX H	0	561.2	17.765	654.380	760.445	1.0000	0.0185	0.00000	3500.0	0.337	16.420	1.082	1.209	134.17	0.0000	23
24 DELP	0	562.2	17.765	654.931	760.445	1.0000	0.0000	0.00000	3500.0	0.338	16.417	1.084	1.209	134.39	0.0000	24
25 NOZZ	0	562.2	17.765	654.931	760.445	1.3997	0.0000	0.00000	1.0	0.000	0.000	1.084	1.209	134.39	0.0000	25
26 TH18	0	510.6	12.692	873.636	760.445	1.3997	0.0000	0.00000	2184.7	0.710	12.692	0.984	0.864	122.02	1.0000	26
27 EX19	0	510.6	12.692	873.636	760.445	1.0000	0.0000	0.00000	2184.7	0.710	12.692	0.984	0.864	122.02	0.0000	27

```
S 1= RC-OA   =    23.9357 : S 2=EMAP(7) =   -15.3261 : S 3= EFF(23)=     0.0185

Y 1=      0.8869= COMP POLY EFF AT STATION  1                           : Y16=99999.0000=          0.000000 -                 0.000000 +99999.0000
Y 2=      0.9030= COMP POLY EFF AT STATION  3                           : Y17=     5.0729=           P(25)   -   PS(26)                +      0.0000
Y 3= 2355.2412=            T(10)   -          459.669922 +     0.0000 : Y18=   149.3463=         YCOMPD17 *             29.440002 +      0.0000
Y 4=  229.4111=            H(10)   -    H(11)                +     0.0000 : Y19= 8657.1602=            FN    - YCOMPD18                +      0.0000
Y 5=   43.7198=         YCOMPD 4 / THETA 10                 +     0.0000 : Y20=     0.4524=           WFE    / YCOMPD19                +      0.0000
Y 6=  151.6860=            H(14)   -    H(15)                +     0.0000 : Y21=    22.8340=            T(1)   **            0.500000 +      0.0000
Y 7=   40.6612=         YCOMPD 6 / THETA 14                 +     0.0000 : Y22=     1.6105=         YCOMPD21 /    P(1)                +      0.0000
Y 8=    2.4954=           RNI(14) /              0.379900 +     0.0000 : Y23= 1310.2874=         YCOMPD22 *   WD(1)                +     -0.0000
Y 9= 3901.3977=          XNMAP 14 *            42.203995 +     0.0000 : Y39=     0.7299=           V-19   /   V-9                  +      0.0000
Y10=    1.9314=          THETA 14 **            0.500000 +     0.0000 : Y40=     0.9950=         0.000000 -              0.000000 +      0.9950
Y11= 7535.3359=         YCOMPD 9 * YCOMPD10                +     0.0000 : Y41=    55.2916=           HP(14)  *              0.005000 +      0.0000
Y12=   10.0253=            FAR(9)  -             0.000000 +    10.0000 : Y42=     0.9443=            T(24)  -     T(23)              +      0.0000
Y15=    0.0000=         0.000000 -             0.000000 +     0.0000 : Y43=10433.5156=            XN(1)  *              4.490000 +      0.0000

T 1=  375.0002  X=YCOMPD15 Z=             W=           ID=03/11/91 E=2 : T 3=      0.3295  X=RMAP(14) Z=XNMAP 14 W=            ID=LPT X MN E=1
T 2= 2184.6985  X=   XM       Z=XNMAP   1 W=           ID=BYP AREA E=1 : T 4=      0.9950  X=YCOMPD23 Z=   XM       W=            ID=INLETREC E=1

P 1=YCOMPD41--> HPX(1)   : P 4=YTABLE 4--> DEFF

     --VARY-- ---HI--- ---LO---  (+)   OBJECT = TARGET    (+) LIM
C19= AREA(26)  2817.00  2183.00 1.00  AREA(26) YTABLE 2 0.00 L=1

MODE=YCOMPD 3  PLA=  2355.000  ADDPLA=     0.000  PLA LIMIT= PLA
IDES=0  NVAR=10  MAX ERR# 6= 10.HP+10*WD = 0.00027  MATRX= 0  LOOP= 16
IOMT  LOOPS=  1  MAX ERROR =        0.        = 0.00000
```

B L E E D S   A N D   L E A K A G E S

```
      FR - TO %W(FR)  %W(1)       W     T-R      P       H    DH/DHT :        FR - TO %W(FR)  %W(1)        W     T-R      P       H    DH/DHT
B 3=   3 - 12 0.0520 0.0034    2.764 1151.2 179.652  278.90 0.7000 : B 7=   3 - OB 0.0000 0.0000     0.000 1069.1 140.760  258.23 0.6000
B 5=   3 - 17 0.0090 0.0006    0.478  775.5  49.675  185.86 0.2500 : B 9=   3 - OB 0.0321 0.0021     1.706  986.2 108.064  237.55 0.5000
 STA   3 TOTL 0.0931 0.0061    4.948

      FR - TO %W(FR)  %W(1)       W     T-R      P       H    DH/DHT :        FR - TO %W(FR)  %W(1)        W     T-R      P       H    DH/DHT
B 1=   6 -  9 0.0577 0.0034    2.781 1392.4 331.410  340.93 1.0000 : B 6=   6 - 21 0.0000 0.0000     0.000 1392.4 331.410  340.93 1.0000
B 2=   6 - 11 0.0385 0.0023    1.856 1392.4 331.410  409.02 1.0000 : B 8=   6 - OB 0.0038 0.0002     0.183 1392.4 331.410  340.93 1.0000
B 4=   6 - 15 0.0070 0.0004    0.337 1392.4 337.377  340.93 0.2500
 STA   6 TOTL 0.1070 0.0063    5.157

      FR - TO %W(FR)  %W(1)       W     T-R      P       H    DH/DHT
B10=  22 - OB 0.0000 0.0000    0.000  561.2  17.765  134.17 1.0000
 STA  22 TOTL 0.0000 0.0000    0.000
```

C O M P O N E N T   P E R F O R M A N C E

N ID	BETA	XN	XN-MAP	HP	HPX/PHP	SF(N,2)	W-MAP	EFF-MAP	R-MAP	SMRELL	FLOW ID	EFF ID	MAPTYP
1 FAN	0.9018	2323.723	85.016	11004.06	55.29	0.0000	792.184	0.8666	1.3494	23.265	QUIETENG	QUIETENG	1
3 HPC	1.0297	11334.316	95.851	14951.07	100.20	0.0000	74.456	0.8371	17.5271	23.826	0. 0.	0. 0.	1
10 HPT	0.0000	11334.316	102.765	15047.03	178.76	0.0000	0.999	0.8947	4.0683	6.282	JAN.2690	JAN.2690	1
14 LPT	0.0000	2323.723	92.441	11058.33	0.00	0.0000	0.999	0.9212	4.1289	6.329	ANALYTIC	ANALYTIC	1
14 LPT			RNISF(1,14),(2,14),(3,14),(4,14)=				1.00250	1.00685	1.00000	1.00000			

N O Z Z L E   P E R F O R M A N C E

NOZZLE	(N)	TYP	FG	FN	RJ	CFG	CD	AREA(TH)	V-EXIT	SF(TH,2)	SF(EX,2)	CFGT ID	CDT ID	MAPTYP
PRI (8-9)	18	1	1741.78	995.99	1.2738	0.9930	0.9379	294.19	1078.2	0.396	0.000	CFG MDXX	CD MDXX	1
SEC (18-19)	25	1	18481.20	7810.52	1.3997	0.9936	0.9493	2184.72	786.9	2.973	0.000	CFG MDXX	CD MDXX	1

F I N A L   E N G I N E   P E R F O R M A N C E

```
 BPR(1) RMIX(1) GAINMX(1) ANGMIX(1)     BPR(2) RMIX(2) GAINMX(2) ANGMIX(2)
14.3081  1.0988  0.0000     0.0000      0.0000  0.0000  0.0000     0.0000

   FG      FRAM     WFE   FARST   EPR     WAENG    WACOR   RCOA    FNR1   FNGF
20223.0 11416.5  3916.2 .06775  1.140  813.593  845.521  23.94    9128. 1.0000

   FN      SFC     WFT    FHV   NODISS   EFFTH     FN/WA  EFFOA    WFTR1  WFTGF
 8806.5  0.4447  3916.2 18550.    0      0.3622  10.8242 0.8488    4049. 1.0000

WARNING: TABLE(S) EXTRAPOLATED.

NPTOT = 48     NP1 = 16       NP2 = 16       NP3 = 16

FMT1
(/.2F10.0.F10.2,2F10.1,3F10.2,/,F10.1,2F10.3,F10.4,2F10.1,     ,          2F10.2
IPUNCH =    412          1       1385        450       1251       1553        827
           1178        734        122        123        530       1287       1257
            797       1148
 NAMES =   CASE        ALT         XM      DTAMB     V-KTAS   YCOMPD15    PAMB
         T-AMB(R)    HPX(3)    BLD(9)    BLD(10)      ERAM      WD(1)    WCOR(1)
           P(1)       T(1)


       4.      4000.       0.41        0.0      267.5       0.00      12.69     504.41
     100.2     0.032      0.000     0.9950      813.6      845.5      14.18     521.39


FMT2
(F10.2,4F10.1,F10.2,F10.4,F10.2,/,8F10.2,)
IPUNCH =    314        651        665       1557       1323       1556       1558
            901        895        888       1174       1167         30         23
           1313       1306
 NAMES =  BPR(1)       FG       F-RAM   YCOMPD19      WFT     YCOMPD18 YCOMPD20
          RC-OA      R(25)      R(18)      T(27)      T(20)   AREA(27) AREA(20)
          WD(27)     WD(20)

     14.31   20223.0    11416.5     8657.2     3916.2     149.35     0.4524      23.94
      1.40      1.27     510.62    1351.91    2184.72     294.19     760.44      52.34

FMT3
(2F10.1,F10.2,4F10.4,F10.1/F10.3,F10.1,6F10.0,)
IPUNCH =   1459       1448       1157        413        416        415        418
            698       1578        274       1554       1554       1554       1554
           1554       1554
 NAMES =  XN(14)     XN(3)      T(10)     CD-18     CFG-19      CD-8      CFG-9
          HP(1)    YCOMPD40  BLDP(9)   YCOMPD16  YCOMPD16  YCOMPD16  YCOMPD16
        YCOMPD16  YCOMPD16

    2323.7   11334.3    2814.91     0.9493     0.9936     0.9379     0.9930    11004.1
     0.995     108.1     99999.     99999.     99999.     99999.     99999.     99999.
```

```
TERMAP (VER 12)  TITLE=  NASA LOW NOISE MODEL (FLOW SCALE DOWN OF MDXX BPR=14 SHORT BYP DUCT MODEL)       DATE= 05-26-92 CASE=    5.0
(CMS  04-06-92) STITLE= 7000 FT, 0.43 MN, MAX CLIMB, RIT=2355 F                                           TIME= 16:15:20 PAGE=     11

  ALT   PAMB   TAMBF  TAMBR  DTAMB DTAMTP PRELHM  KTAS   KCAS   XM    RPR   DEFF   ERAM    P1    T1R   DEFTIP ERAMTP  PTIP  TTIPR
 7000. 11.340  34.04 493.71   0.0    0.0    0.0  277.5  251.1  0.430 1.130 0.9950 0.9950 12.812 512.00 0.0000 0.0000  0.000   0.0

(N) ID   NSI    T-R      P      W-COR      W        R       EFF      FAR      AREA   XMN     PS     THETA  DELTA    H     SF-N,1  (N)
--- --   ---    ---      -      -----      -        -       ---      ---      ----   ---     --     -----  -----    -     ------  ---
 1 FAN    0    512.0   12.812  868.332  761.943  1.2706  0.8891  0.00000     0.0  0.000    0.000  0.987  0.872  122.35  1.0191    1
 2 DELP   0    552.8   16.279   46.693   50.099  0.9929  0.0000  0.00000   384.3  0.210   15.785  1.066  1.108  132.15  0.2349    2
 3 HPC    0    552.8   16.163   47.038   50.110 19.7903  0.8581  0.00000     0.0  0.000    0.000  1.066  1.100  132.15  1.0241    3
 4 COOL   0   1384.2  319.875    3.411   45.445  0.0000  0.0000  0.00000     0.0  0.000    0.000  2.669 21.766  338.80  0.0000    4
 5 DELP   0   1384.2  319.875    3.411   45.445  1.0000  0.0000  0.00000    23.7  0.257  305.984  2.669 21.766  338.80  0.0000    5
 6 DELP   0   1384.2  319.875    3.411   45.445  0.9767  0.0000  0.00000    20.6  0.299  301.237  2.669 21.766  338.80  0.4000    6
 7 HX C   0   1384.2  312.420    3.119   40.582  1.0000  0.0000  0.00000    26.7  0.205  303.641  2.669 21.259  338.80  0.0000    7
 8 BURN   0   1368.9  312.420    3.101   40.582  0.9809  0.9990  0.00000    26.5  0.205  303.631  2.639 21.259  334.81  0.6799    8
 9 COOL   0   2896.4  306.444    4.716   41.613  0.0000  0.0000  0.02540     0.0  0.000    0.000  5.584 20.852  787.82  0.0000    9
10 HPT    0   2814.5  306.444    5.086   44.236  4.8329  0.8986  0.02386     0.0  0.000    0.000  5.246 20.852  761.20  1.0046   10
11 PWRK   0   2044.0   63.408   20.353   44.236  0.0000  0.0000  0.02386     0.0  0.000    0.000  3.941  4.315  531.80  0.0007   11
12 COOL   0   2029.5   63.408   21.083   45.986  0.0000  0.0000  0.02293     0.0  0.000    0.000  3.913  4.315  527.03  0.0000   12
13 DELP   0   1985.5   63.408   22.035   48.591  0.9970  0.0000  0.02167   196.0  0.200   61.763  3.828  4.315  513.61  0.1163   13
14 LPT    0   1985.5   63.216   22.607   48.592  4.2545  0.9281  0.02167     0.0  0.000    0.000  3.729  4.302  513.62  1.0003   14
15 COOL   0   1433.5   14.859   79.898   48.592  0.0000  0.0000  0.02167     0.0  0.000    0.000  2.764  1.011  359.29  0.0000   15
16 DELP   0   1433.2   14.859   80.413   48.910  0.9947  0.0000  0.02153   406.6  0.369   13.577  2.763  1.011  359.15  0.0609   16
17 COOL   0   1433.2   14.781   80.837   48.910  0.0000  0.0000  0.02153     0.0  0.000    0.000  2.763  1.006  359.15  0.0000   17
18 NOZZ   0   1427.5   14.781   81.421   49.361  1.3034  0.0000  0.02133     1.0  0.000    0.000  2.752  1.006  357.55  0.0000   18
19  TH8   0   1334.0   11.340  102.590   49.361  1.3034  0.0000  0.02133   294.2  0.639   11.337  2.572  0.772  332.40  1.0000   19
20  EX9   0   1334.0   11.340  102.590   49.361  1.0000  0.0000  0.02133   294.2  0.639   11.340  2.572  0.772  332.40  0.0000   20
--- --   ---    ---      -      -----      -        -       ---      ---      ----   ---     --     -----  -----    -     ------  ---
21 COOL   0    552.8   16.279  663.440  711.843  0.0000  0.0000  0.00000     0.0  0.000    0.000  1.066  1.108  132.15  0.0000   21
22 DELP   0    552.8   16.279  663.440  711.843  0.9970  0.0000  0.00000  3500.0  0.343   15.009  1.066  1.108  132.15  0.0378   22
23 HX H   0    552.8   16.231  665.406  711.843  1.0000  0.0185  0.00000  3500.0  0.344   14.956  1.066  1.104  132.15  0.0000   23
24 DELP   0    553.8   16.231  665.978  711.843  1.0000  0.0000  0.00000  3500.0  0.344   14.954  1.068  1.104  132.38  0.0000   24
25 NOZZ   0    553.8   16.231  665.978  711.843  1.4313  0.0000  0.00000     1.0  0.000    0.000  1.068  1.104  132.38  0.0000   25
26 TH18   0    499.8   11.340  905.566  711.843  1.4313  0.0000  0.00000  2185.2  0.735   11.338  0.964  0.772  119.43  1.0000   26
27 EX19   0    499.8   11.340  905.566  711.843  1.0000  0.0000  0.00000  2185.2  0.735   11.340  0.964  0.772  119.43  0.0000   27
--- --   ---    ---      -      -----      -        -       ---      ---      ----   ---     --     -----  -----    -     ------  ---

S 1= RC-OA   =   24.9662 : S 2=EMAP(7) =  -15.3368 : S 3= EFF(23)=     0.0185

Y 1=      0.8928= COMP POLY EFF AT STATION  1                       : Y16=99999.0000=          0.000000 -              0.000000 +99999.0000
Y 2=      0.9039= COMP POLY EFF AT STATION  3                       : Y17=     4.8929=           P(25)   -   PS(26)                +    0.0000
Y 3= 2354.8396=            T(10)   -          459.669922 +   0.0000 : Y18=   144.0463=         YCOMPD17 *             29.440002 +    0.0000
Y 4=   229.4006=           H(10)   -    H(11)            +   0.0000 : Y19= 8178.6602=           FN      - YCOMPD18               +    0.0000
Y 5=    43.7254=        YCOMPD 4 / THETA 10              +   0.0000 : Y20=     0.4537=          WFE      / YCOMPD19               +    0.0000
Y 6=   154.3306=           H(14)   -    H(15)            +   0.0000 : Y21=    22.6274=           T(1)   **             0.500000 +    0.0000
Y 7=    41.3887=        YCOMPD 6 / THETA 14              +   0.0000 : Y22=     1.7661=         YCOMPD21 /    P(1)                 +    0.0000
Y 8=     2.3525=          RNI(14) /             0.379900 +   0.0000 : Y23= 1345.6384=         YCOMPD22 *   WD(1)                 +   -0.0000
Y 9= 3932.3457=        XNMAP 14 *              42.203995 +   0.0000 : Y39=     0.7176=          V-19    /   V-9                   +    0.0000
Y10=     1.9310=        THETA 14 **             0.500000 +   0.0000 : Y40=     0.9950=         0.000000 -              0.000000 +    0.9950
Y11= 7593.4062=        YCOMPD 9 * YCOMPD10              +   0.0000 : Y41=    53.0513=          HP(14)   *              0.005000 +    0.0000
Y12=    10.0254=         FAR(9)   -             0.000000 +  10.0000 : Y42=     0.9512=           T(24)   -    T(23)                +    0.0000
Y15=     0.0000=        0.000000 -              0.000000 +   0.0000 : Y43=10513.9141=           XN(1)   *              4.490000 +    0.0000

T 1=  375.0002  X=YCOMPD15 Z=           W=           ID=03/11/91 E=2 : T 3=     0.3403  X=RMAP(14) Z=XNMAP 14 W=           ID=LPT X MN E=1
T 2= 2184.6997  X=  XM      Z=XNMAP  1 W=           ID=BYP AREA E=3 : T 4=     0.9950  X=YCOMPD23 Z=  XM     W=           ID=INLETREC E=1

P 1=YCOMPD41--> HPX(1)  : P 4=YTABLE 4--> DEFF

    --VARY-- ---HI--- ---LO---  (+)   OBJECT = TARGET   (+) LIM
C19= AREA(26)  2817.00  2183.00 1.00  AREA(26) YTABLE 2 0.00 L=1

MODE=YCOMPD 3  PLA=  2355.000  ADDPLA=     0.000  PLA LIMIT= PLA
IDES=0  NVAR=10  MAX ERR# 1= 19.CONSTR.  = 0.00023  MATRX= 0  LOOP= 14
IOMT  LOOPS=  1  MAX ERROR =       0.    = 0.00000

                   B L E E D S    A N D    L E A K A G E S
                   ---------------------------------------
     FR - TO %W(FR)  %W(1)     W     T-R     P       H    DH/DHT :       FR - TO %W(FR)  %W(1)     W     T-R     P       H    DH/DHT
B 3=  3 - 12 0.0520 0.0034   2.606 1142.9 168.533  276.80 0.7000 : B 7=  3 - OB 0.0000 0.0000   0.000 1060.8 131.778  256.14 0.6000
B 5=  3 - 17 0.0090 0.0006   0.451  767.0  46.018  183.81 0.2500 : B 9=  3 - OB 0.0321 0.0021   1.609  977.8 100.927  235.47 0.5000
 STA  3 TOTL 0.0931 0.0061   4.665

     FR - TO %W(FR)  %W(1)     W     T-R     P       H    DH/DHT :       FR - TO %W(FR)  %W(1)     W     T-R     P       H    DH/DHT
B 1=  6 -  9 0.0577 0.0034   2.622 1384.2 312.420  338.80 1.0000 : B 6=  6 - 21 0.0000 0.0000   0.000 1384.2 312.420  338.80 1.0000
B 2=  6 - 11 0.0385 0.0023   1.750 1384.2 312.420  406.44 1.0000 : B 8=  6 - OB 0.0038 0.0002   0.173 1384.2 312.420  338.80 1.0000
B 4=  6 - 15 0.0070 0.0004   0.318 1384.2 318.011  338.80 0.2500
 STA  6 TOTL 0.1070 0.0064   4.863

     FR - TO %W(FR)  %W(1)     W     T-R     P       H    DH/DHT
B10= 22 - OB 0.0000 0.0000   0.000  552.8  16.231  132.15 1.0000
 STA 22 TOTL 0.0000 0.0000   0.000

                  C O M P O N E N T    P E R F O R M A N C E
                  ------------------------------------------
  N  ID       BETA      XN      XN-MAP     HP     HPX/PHP  SF(N,2)    W-MAP  EFF-MAP    R-MAP    SMRELL   FLOW ID    EFF ID   MAPTYP
  1 FAN     0.9082  2341.630    86.453  10558.21    53.05   0.0000  813.557   0.8724   1.3685   23.114  QUIETENG  QUIETENG     1
  3 HPC     1.0278 11297.039    96.259  14088.69   100.20   0.0000   76.275   0.8379  18.0831   23.500   0.  0.     0.  0.      1
 10 HPT     0.0000 11297.039   102.436  14190.13   167.44   0.0000    0.999   0.8945   4.0704    6.273  JAN.2690  JAN.2690     1
 14 LPT     0.0000  2341.630    93.175  10610.25     0.00   0.0000    1.000   0.9216   4.2545    6.351  ANALYTIC  ANALYTIC     1
 14 LPT                        RNISF(1,14),(2,14),(3,14),(4,14)=   1.00250  1.00679  1.00000  1.00000

                    N O Z Z L E    P E R F O R M A N C E
                    ------------------------------------
  NOZZLE      (N)  TYP      FG         FN       RJ      CFG      CD     AREA(TH)  V-EXIT  SF(TH,2) SF(EX,2)   CFGT ID     CDT ID   MAPTYP
PRI (8-9)     18    1    1709.83    980.40   1.3034  0.9932  0.9391    294.19   1122.2    0.375    0.000   CFG MDXX   CD  MDXX      1
SEC (18-19)   25    1   17706.57   7342.31   1.4313  0.9938  0.9512   2185.20    805.3    2.817    0.000   CFG MDXX   CD  MDXX      1

               F I N A L    E N G I N E    P E R F O R M A N C E
               -------------------------------------------------
 BPR(1) RMIX(1) GAINMX(1) ANGMIX(1)    BPR(2) RMIX(2) GAINMX(2) ANGMIX(2)
14.2086  1.0982  0.0000    0.0000      0.0000  0.0000  0.0000    0.0000

  FG      FRAM    WFE   FARST   EPR     WAENG    WACOR    RCOA    FNR1   FNGF
19416.4 11093.7 3710.8 .06775  1.154  761.943  868.332   24.97   9546. 1.0000

  FN      SFC     WFT    FHV   NODISS   EFFTH     FN/WA  EFFOA   WFTR1  WFTGF
8322.7  0.4459  3710.8 18550.    0     0.3724  10.9230 0.8505   4284. 1.0000

WARNING: TABLE(S) EXTRAPOLATED.

NPTOT = 48     NP1 = 16     NP2 = 16     NP3 = 16

FMT1
(/,2F10.0,F10.2,2F10.1,3F10.2,/,F10.1,2F10.3,F10.4,2F10.1,      ,          2F10.2
IPUNCH =   412        1      1385       450      1251      1553       827
          1178      734       122       123       530      1287      1257
           797     1148
 NAMES =  CASE      ALT        XM     DTAMB    V-KTAS  YCOMPD15   PAMB
        T-AMB(R)  HPX(3)    BLD(9)   BLD(10)    ERAM      WD(1)   WCOR(1)
          P(1)      T(1)


        5.       7000.      0.43       0.0     277.5      0.00     11.34    493.71
    100.2       0.032     0.000    0.9950     761.9     868.3     12.81    512.00


FMT2
(F10.2,4F10.1,F10.2,F10.4,F10.2,/,8F10.2,)
IPUNCH =   314      651       665      1557      1323      1556      1558
           901      895       888      1174      1167        30        23
          1313     1306
 NAMES =  BPR(1)    FG       F-RAM   YCOMPD19   WFT      YCOMPD18 YCOMPD20
          RC-OA    R(25)     R(18)     T(27)    T(20)    AREA(27) AREA(20)
          WD(27)   WD(20)

    14.21    19416.4   11093.7    8178.7    3710.8    144.05    0.4537     24.97
     1.43       1.30    499.78   1333.99   2185.20    294.19    711.84     49.36

FMT3
(2F10.1,F10.2,4F10.4,F10.1/F10.3,F10.1,6F10.0,)
IPUNCH =  1459     1448      1157       413       416       415       418
           698     1578       274      1554      1554      1554      1554
          1554     1554
 NAMES =  XN(14)   XN(3)     T(10)    CD-18    CFG-19    CD-8      CFG-9
          HP(1)   YCOMPD40 BLDP(9)  YCOMPD16 YCOMPD16 YCOMPD16 YCOMPD16
        YCOMPD16 YCOMPD16

   2341.6    11297.0   2814.51    0.9512    0.9938    0.9391    0.9932   10558.2
    0.995      100.9    99999.    99999.    99999.    99999.    99999.    99999.
```

```
TERMAP (VER 12)  TITLE=  NASA LOW NOISE MODEL (FLOW SCALE DOWN OF MDXX BPR=14 SHORT BYP DUCT MODEL)        DATE= 05-26-92 CASE=    6.0
(CMS  04-06-92) STITLE= 10000 FT, 0.45 MN, MAX CLIMB, RIT=2355 F                                           TIME= 16:15:20 PAGE=     12

   ALT    PAMB    TAMBF  TAMBR   DTAMB DTAMTP PRELHM  KTAS    KCAS    XM      RPR   DEFF    ERAM     P1     T1R    DEFTIP ERAMTP   PTIP  TTIPR
 10000. 10.107   23.34 483.01    0.0    0.0    0.0  287.3   248.8  0.450   1.143 0.9950 0.9950 11.555 502.61 0.0000 0.0000   0.000    0.0

(N) ID     NSI     T-R       P        W-COR      W        R        EFF       FAR       AREA    XMN       PS     THETA  DELTA     H      SF-N,1  (N)
--- --     ---     ---       -        -----      -        -        ---       ---       ----    ---       --     -----  -----     -      ------  ---
 1 FAN      0     502.6    11.555   890.380  711.185   1.2849   0.8931   0.00000      0.0   0.000     0.000   0.969  0.786   120.10   1.0191     1
 2 DELP     0     544.5    14.848    47.784 - 47.120   0.9925   0.0000   0.00000    384.3   0.216    14.375   1.050  1.010   130.14   0.2349     2
 3 HPC      0     544.5    14.737    48.148   47.123  20.4054   0.8587   0.00000      0.0   0.000     0.000   1.050  1.003   130.14   1.0241     3
 4 COOL     0    1376.5   300.708     3.402   42.736   0.0000   0.0000   0.00000      0.0   0.000     0.000   2.654 20.462   336.78   0.0000     4
 5 DELP     0    1376.5   300.708     3.402   42.736   1.0000   0.0000   0.00000     23.7   0.256   287.717   2.654 20.462   336.78   0.0000     5
 6 DELP     0    1376.5   300.708     3.402   42.736   0.9768   0.0000   0.00000     20.6   0.298   283.280   2.654 20.462   336.78   0.4000     6
 7 HX C     0    1376.5   293.737     3.110   38.163   1.0000   0.0000   0.00000     26.7   0.205   285.527   2.654 19.987   336.78   0.0000     7
 8 BURN     0    1361.1   293.737     3.093   38.163   0.9810   0.9990   0.00000     26.5   0.205   285.518   2.624 19.987   332.79   0.6799     8
 9 COOL     0    2896.9   288.149     4.717   39.138   0.0000   0.0000   0.02553      0.0   0.000     0.000   5.585 19.607   788.09   0.0000     9
10 HPT      0    2814.6   288.149     5.087   41.601   4.8348   0.8984   0.02398      0.0   0.000     0.000   5.246 19.607   761.34   1.0046    10
11 PWRK     0    2044.2    59.599    20.365   41.601   0.0000   0.0000   0.02398      0.0   0.000     0.000   3.941  4.055   531.93   0.0007    11
12 COOL     0    2029.4    59.599    21.094   43.247   0.0000   0.0000   0.02305      0.0   0.000     0.000   3.913  4.055   527.07   0.0000    12
13 DELP     0    1985.0    59.599    22.044   45.697   0.9970   0.0000   0.02178    196.0   0.200    58.051   3.827  4.055   513.54   0.1163    13
14 LPT      0    1985.0    59.419    22.617   45.697   4.3788   0.9285   0.02178      0.0   0.000     0.000   3.728  4.043   513.54   1.0003    14
15 COOL     0    1423.6    13.570    81.991   45.697   0.0000   0.0000   0.02178      0.0   0.000     0.000   2.745  0.923   356.64   0.0000    15
16 DELP     0    1423.3    13.570    82.519   45.996   0.9944   0.0000   0.02164    406.6   0.381    12.329   2.744  0.923   356.51   0.0609    16
17 COOL     0    1423.3    13.494    82.981   45.996   0.0000   0.0000   0.02164      0.0   0.000     0.000   2.744  0.918   356.51   0.0000    17
18 NOZZ     0    1417.6    13.494    83.579   46.420   1.3352   0.0000   0.02144      1.0   0.000     0.000   2.733  0.918   354.91   0.0000    18
19  TH8     0    1316.5    10.107   107.541   46.420   1.3352   0.0000   0.02144    294.2   0.668    10.114   2.538  0.688   327.77   1.0000    19
20  EX9     0    1316.5    10.107   107.541   46.420   1.0000   0.0000   0.02144    294.2   0.668    10.107   2.538  0.688   327.77   0.0000    20
--- --     ---     ---       -        -----      -        -        ---       ---       ----    ---       --     -----  -----     -      ------  ---
21 COOL     0     544.5    14.848   673.425  664.065   0.0000   0.0000   0.00000      0.0   0.000     0.000   1.050  1.010   130.14   0.0000    21
22 DELP     0     544.5    14.848   673.424  664.065   0.9969   0.0000   0.00000   3500.0   0.349    13.650   1.050  1.010   130.14   0.0378    22
23 HX H     0     544.5    14.803   675.487  664.065   1.0000   0.0185   0.00000   3500.0   0.350    13.600   1.050  1.007   130.14   0.0000    23
24 DELP     0     545.4    14.803   676.081  664.065   1.0000   0.0000   0.00000   3500.0   0.350    13.598   1.052  1.007   130.37   0.0000    24
25 NOZZ     0     545.4    14.803   676.081  664.065   1.4647   0.0000   0.00000      1.0   0.000     0.000   1.052  1.007   130.37   0.0000    25
26 TH18     0     489.0    10.107   937.597  664.065   1.4647   0.0000   0.00000   2185.2   0.759    10.105   0.943  0.688   116.84   1.0000    26
27 EX19     0     489.0    10.107   937.597  664.065   1.0000   0.0000   0.00000   2185.2   0.759    10.107   0.943  0.688   116.84   0.0000    27
--- --     ---     ---       -        -----      -        -        ---       ---       ----    ---       --     -----  -----     -      ------  ---

S 1= RC-OA   =    26.0235 : S 2=EMAP(7) =  -15.3502 : S 3= EFF(23)=     0.0185

Y 1=     0.8968= COMP POLY EFF AT STATION  1                            : Y16=99999.0000=          0.000000 -            0.000000 +99999.0000
Y 2=     0.9047= COMP POLY EFF AT STATION  3                            : Y17=     4.6973=           P(25)   -  PS(26)            +     0.0000
Y 3= 2354.9009=            T(10)   -            459.669922 +    0.0000 : Y18=   138.2893=         YCOMPD17 *           29.440002 +     0.0000
Y 4=   229.4087=           H(10)   -    H(11)                +    0.0000 : Y19= 7699.0781=            FN     - YCOMPD18             +     0.0000
Y 5=    43.7272=         YCOMPD 4 / THETA 10                 +    0.0000 : Y20=     0.4555=           WFE     / YCOMPD19             +     0.0000
Y 6=   156.9011=           H(14)   -    H(15)                +    0.0000 : Y21=    22.4190=           T(1)    **            0.500000 +     0.0000
Y 7=    42.0890=         YCOMPD 6 / THETA 14                 +    0.0000 : Y22=     1.9401=         YCOMPD21 /    P(1)               +     0.0000
Y 8=     2.2118=          RNI(14) /              0.379900 +    0.0000 : Y23= 1379.8057=         YCOMPD22 *    WD(1)              +    -0.0000
Y 9= 3965.2583=          XNMAP 14 *             42.203995 +    0.0000 : Y39=     0.7059=           V-19    /    V-9                +     0.0000
Y10=     1.9308=         THETA 14 **             0.500000 +    0.0000 : Y40=     0.9950=         0.000000 -            0.000000 +     0.9950
Y11= 7655.9687=         YCOMPD 9 * YCOMPD10                  +    0.0000 : Y41=    50.7217=           HP(14)  *             0.005000 +     0.0000
Y12=    10.0255=           FAR(9)  -             0.000000 +   10.0000 : Y42=     0.9590=           T(24)   -    T(23)              +     0.0000
Y15=     0.0000=         0.000000 -              0.000000 +    0.0000 : Y43=10600.5430=           XN(1)   *             4.490000 +     0.0000

T 1=  375.0002  X=YCOMPD15 Z=           W=            ID=03/11/91 E=2 : T 3=      0.3508  X=RMAP(14) Z=XNMAP 14 W=            ID=LPT X MN E=1
T 2= 2184.6992  X=  XM      Z=XNMAP  1 W=            ID=BYP AREA E=3 : T 4=      0.9950  X=YCOMPD23 Z=  XM      W=            ID=INLETREC E=1

P 1=YCOMPD41--> HPX(1)   : P 4=YTABLE 4--> DEFF

     --VARY-- ---HI--- ---LO---  (+)   OBJECT = TARGET   (+) LIM
C19= AREA(26)  2817.00  2183.00 1.00  AREA(26) YTABLE 2 0.00 L=1

MODE=YCOMPD 3  PLA=  2355.000  ADDPLA=     0.000  PLA LIMIT= PLA
IDES=0  NVAR=10  MAX ERR# 9= 19.PS+A/P+A = 0.00035  MATRX= 0  LOOP= 14
IOMT  LOOPS=  1  MAX ERROR =       0.       = 0.00000

                      B L E E D S   A N D   L E A K A G E S
                      -------------------------------------
      FR - TO %W(FR)  %W(1)      W     T-R      P        H    DH/DHT :       FR - TO %W(FR)  %W(1)      W     T-R      P        H    DH/DHT
B 3=   3 - 12 0.0520 0.0034   2.450 1134.9 157.733  274.79 0.7000 : B 7=   3 - OB 0.0000 0.0000   0.000 1052.7 123.093  254.12 0.6000
B 5=   3 - 17 0.0090 0.0006   0.424  758.8  42.549  181.80 0.2500 : B 9=   3 - OB 0.0321 0.0021   1.513  969.7  94.060  233.46 0.5000
 STA   3 TOTL 0.0931 0.0062   4.387

      FR - TO %W(FR)  %W(1)      W     T-R      P        H    DH/DHT :       FR - TO %W(FR)  %W(1)      W     T-R      P        H    DH/DHT
B 1=   6 -  9 0.0577 0.0035   2.466 1376.5 293.737  336.78 1.0000 : B 6=   6 - 21 0.0000 0.0000   0.000 1376.5 293.737  336.78 1.0000
B 2=   6 - 11 0.0385 0.0023   1.645 1376.5 293.737  403.97 1.0000 : B 8=   6 - OB 0.0038 0.0002   0.162 1376.5 293.737  336.78 1.0000
B 4=   6 - 15 0.0070 0.0004   0.299 1376.5 298.965  336.78 0.2500
 STA   6 TOTL 0.1070 0.0064   4.573

      FR - TO %W(FR)  %W(1)      W     T-R      P        H    DH/DHT
B10=  22 - OB 0.0000 0.0000   0.000  544.5  14.803  130.14 1.0000
 STA  22 TOTL 0.0000 0.0000   0.000

                     C O M P O N E N T   P E R F O R M A N C E
                     -----------------------------------------
  N  ID        BETA       XN       XN-MAP      HP     HPX/PHP  SF(N,2)     W-MAP   EFF-MAP    R-MAP    SMRELL   FLOW ID    EFF ID   MAPTYP
  1 FAN       0.9144  2360.923     87.976  10097.22    50.72    0.0000   834.214    0.8764   1.3880    22.634  QUIETENG  QUIETENG      1
  3 HPC       1.0255 11259.977     96.679  13248.09   100.20    0.0000    78.074    0.8385  18.6423    23.156   0.   0.    0.   0.       1
 10 HPT       0.0000 11259.977    102.100  13346.50   156.42    0.0000     0.999    0.8943   4.0719     6.263  JAN.2690  JAN.2690      1
 14 LPT       0.0000  2360.923     93.955  10144.34     0.00    0.0000     1.000    0.9221   4.3788     6.375  ANALYTIC  ANALYTIC      1
 14 LPT                            RNISF(1,14),(2,14),(3,14),(4,14)=  1.00250   1.00672  1.00000   1.00000

                        N O Z Z L E   P E R F O R M A N C E
                        -----------------------------------
  NOZZLE       (N)  TYP      FG         FN        RJ      CFG       CD     AREA(TH)  V-EXIT  SF(TH,2) SF(EX,2)   CFGT ID    CDT ID   MAPTYP
PRI (8-9)      18    1    1670.88     960.73   1.3352   0.9933   0.9405    294.19   1165.9     0.355    0.000   CFG MDXX  CD  MDXX      1
SEC (18-19)    25    1   16884.73    6876.64   1.4647   0.9940   0.9532   2185.20    823.0     2.671    0.000   CFG MDXX  CD  MDXX      1

                   F I N A L   E N G I N E   P E R F O R M A N C E
                   -----------------------------------------------
 BPR(1) RMIX(1) GAINMX(1) ANGMIX(1)     BPR(2) RMIX(2) GAINMX(2) ANGMIX(2)
14.0930  1.0970  0.0000    0.0000       0.0000  0.0000  0.0000    0.0000

   FG      FRAM     WFE   FARST   EPR     WAENG    WACOR   RCOA    FNR1   FNGF
18555.6 10718.2  3507.2 .06775  1.168  711.185  890.380  26.02   9968. 1.0000

   FN      SFC     WFT     FHV   NODISS   EFFTH    FN/WA  EFFOA   WFTR1  WFTGF
 7837.4  0.4475  3507.2 18550.     0     0.3820 11.0202 0.8503   4531. 1.0000

WARNING: TABLE(S) EXTRAPOLATED.

NPTOT = 48      NP1 = 16      NP2 = 16      NP3 = 16

FMT1
(/,2F10.0,F10.2,2F10.1,3F10.2,/,F10.1,2F10.3,F10.4,2F10.1,      ,           2F10.2
IPUNCH =    412          1       1385        450       1251       1553        827
           1178        734        122        123        530       1287       1257
            797       1148
 NAMES =  CASE       ALT         XM       DTAMB     V-KTAS   YCOMPD15   PAMB
          T-AMB(R)   HPX(3)   BLD(9)    BLD(10)     ERAM       WD(1)    WCOR(1)
            P(1)      T(1)


        6.      10000.       0.45        0.0       287.3       0.00      10.11     483.01
    100.2        0.032      0.000     0.9950       711.2      890.4      11.56     502.61


FMT2
(F10.2,4F10.1,F10.2,F10.4,F10.2,/,8F10.2,)
IPUNCH =    314        651        665       1557       1323       1556       1558
            901        895        888       1174       1167         30         23
           1313       1306
 NAMES =  BPR(1)     FG        F-RAM    YCOMPD19   WFT       YCOMPD18 YCOMPD20
          RC-OA      R(25)     R(18)      T(27)     T(20)    AREA(27) AREA(20)
          WD(27)     WD(20)

    14.09     18555.6    10718.2     7699.1     3507.2     138.29     0.4555      26.02
     1.46        1.34     488.99    1316.52    2185.20     294.19     664.07      46.42

FMT3
(2F10.1,F10.2,4F10.4,F10.1/F10.3,F10.1,6F10.0,)
IPUNCH =   1459       1448       1157        413        416        415        418
            698       1578        274       1554       1554       1554       1554
           1554       1554
 NAMES =  XN(14)     XN(3)      T(10)     CD-18     CFG-19     CD-8       CFG-9
          HP(1)     YCOMPD40 BLDP(9)   YCOMPD16 YCOMPD16 YCOMPD16 YCOMPD16
        YCOMPD16 YCOMPD16

   2360.9     11260.0    2814.57     0.9532     0.9940     0.9405     0.9933    10097.2
    0.995        94.1     99999.     99999.     99999.     99999.     99999.     99999.
```

```
TERMAP (VER 12)  TITLE=  NASA LOW NOISE MODEL (FLOW SCALE DOWN OF MDXX BPR=14 SHORT BYP DUCT MODEL)      DATE= 05-26-92 CASE=    7.0
(CMS  04-06-92) STITLE= 10000 FT, 0.50 MN, MAX CLIMB, RIT=2355 F                                         TIME= 16:15:20 PAGE=     13

   ALT    PAMB    TAMBF  TAMBR   DTAMB DTAMTP PRELHM  KTAS    KCAS    XM     RPR   DEFF    ERAM     P1     T1R   DEFTIP ERAMTP  PTIP   TTIPR
 10000. 10.107   23.34 483.01    0.0    0.0    0.0  319.2   276.9   0.500  1.180 0.9950 0.9950 11.929 507.21 0.0000 0.0000  0.000    0.0

 (N) ID     NSI     T-R        P        W-COR       W         R        EFF       FAR        AREA     XMN       PS      THETA  DELTA      H      SF-N,1   (N)
 --- --     ---     ---        -        -----       -         -        ---       ---        ----     ---       --      -----  -----      -      ------   ---
  1 FAN      0     507.2    11.929    897.343   736.546   1.2770   0.8955   0.00000       0.0   0.000     0.000   0.978   0.812    121.21   1.0191     1
  2 DELP     0     548.2    15.232     47.331    47.716   0.9927   0.0000   0.00000     384.3   0.213    14.756   1.057   1.036    131.04   0.2349     2
  3 HPC      0     548.2    15.121     47.678    47.714  20.1410   0.8584   0.00000       0.0   0.000     0.000   1.057   1.029    131.04   1.0241     3
  4 COOL     0    1380.1   304.543      3.406    43.271   0.0000   0.0000   0.00000       0.0   0.000     0.000   2.661  20.723    337.73   0.0000     4
  5 DELP     0    1380.1   304.543      3.406    43.271   1.0000   0.0000   0.00000      23.7   0.256   291.355   2.661  20.723    337.73   0.0000     5
  6 DELP     0    1380.1   304.543      3.406    43.271   0.9768   0.0000   0.00000      20.6   0.298   286.849   2.661  20.723    337.73   0.4000     6
  7 HX C     0    1380.1   297.466      3.114    38.641   1.0000   0.0000   0.00000      26.7   0.205   289.131   2.661  20.241    337.73   0.0000     7
  8 BURN     0    1364.8   297.466      3.097    38.641   0.9809   0.9990   0.00000      26.5   0.205   289.122   2.631  20.241    333.74   0.6799     8
  9 COOL     0    2897.0   291.792      4.717    39.626   0.0000   0.0000   0.02547       0.0   0.000     0.000   5.585  19.855    788.06   0.0000     9
 10 HPT      0    2814.8   291.792      5.086    42.122   4.8354   0.8985   0.02393       0.0   0.000     0.000   5.247  19.855    761.37   1.0046    10
 11 PWRK     0    2044.2    60.345     20.365    42.122   0.0000   0.0000   0.02393       0.0   0.000     0.000   3.941   4.106    531.90   0.0007    11
 12 COOL     0    2029.5    60.345     21.095    43.788   0.0000   0.0000   0.02300       0.0   0.000     0.000   3.913   4.106    527.08   0.0000    12
 13 DELP     0    1985.4    60.345     22.046    46.269   0.9970   0.0000   0.02174     196.0   0.201    58.778   3.828   4.106    513.60   0.1163    13
 14 LPT      0    1985.4    60.163     22.619    46.269   4.4036   0.9286   0.02174       0.0   0.000     0.000   3.728   4.094    513.60   1.0003    14
 15 COOL     0    1421.9    13.662     82.406    46.269   0.0000   0.0000   0.02174       0.0   0.000     0.000   2.741   0.930    356.16   0.0000    15
 16 DELP     0    1421.6    13.662     82.938    46.572   0.9944   0.0000   0.02159     406.6   0.383    12.399   2.741   0.930    356.04   0.0609    16
 17 COOL     0    1421.6    13.585     83.407    46.572   0.0000   0.0000   0.02159       0.0   0.000     0.000   2.741   0.924    356.04   0.0000    17
 18 NOZZ     0    1416.0    13.585     84.010    47.002   1.3442   0.0000   0.02139       1.0   0.000     0.000   2.730   0.924    354.46   0.0000    18
 19   TH8    0    1312.7    10.107    108.731    47.002   1.3442   0.0000   0.02139     294.2   0.676    10.100   2.531   0.688    326.74   1.0000    19
 20   EX9    0    1312.7    10.107    108.731    47.002   1.0000   0.0000   0.02139     294.2   0.676    10.107   2.531   0.688    326.74   0.0000    20
 --- --     ---     ---        -        -----       -         -        ---       ---        ----     ---       --      -----  -----      -      ------   ---
 21 COOL     0     548.2    15.232    683.262   688.829   0.0000   0.0000   0.00000       0.0   0.000     0.000   1.057   1.036    131.04   0.0000    21
 22 DELP     0     548.2    15.232    683.262   688.829   0.9968   0.0000   0.00000    3500.0   0.355    13.963   1.057   1.036    131.04   0.0378    22
 23 HX H     0     548.2    15.184    685.423   688.829   1.0000   0.0185   0.00000    3500.0   0.356    13.910   1.057   1.033    131.04   0.0000    23
 24 DELP     0     549.2    15.184    686.007   688.829   1.0000   0.0000   0.00000    3500.0   0.356    13.908   1.059   1.033    131.27   0.0000    24
 25 NOZZ     0     549.2    15.184    686.007   688.829   1.5024   0.0000   0.00000       1.0   0.000     0.000   1.059   1.033    131.27   0.0000    25
 26 TH18     0     488.8    10.107    972.351   688.829   1.5024   0.0000   0.00000    2185.2   0.785    10.105   0.942   0.688    116.79   1.0000    26
 27 EX19     0     488.8    10.107    972.351   688.829   1.0000   0.0000   0.00000    2185.2   0.785    10.107   0.942   0.688    116.79   0.0000    27
 --- --     ---     ---        -        -----       -         -        ---       ---        ----     ---       --      -----  -----      -      ------   ---

S 1= RC-OA   =   25.5304 : S 2=EMAP(7) =  -15.3399 : S 3= EFF(23)=     0.0185

Y 1=     0.8990= COMP POLY EFF AT STATION  1                          : Y16=99999.0000=           0.000000 -                0.000000 +99999.0000
Y 2=     0.9044= COMP POLY EFF AT STATION  3                          : Y17=     5.0798=            P(25)   -   PS(26)                +     0.0000
Y 3= 2355.1436=            T(10)   -          459.669922 +    0.0000 : Y18=   149.5487=           YCOMPD17 *            29.440002 +     0.0000
Y 4=   229.4653=           H(10)   -    H(11)              +    0.0000 : Y19= 7348.6406=             FN     - YCOMPD18              +     0.0000
Y 5=    43.7336=         YCOMPD 4 / THETA 10               +    0.0000 : Y20=     0.4822=            WFE     / YCOMPD19              +     0.0000
Y 6=   157.4373=           H(14)   -    H(15)              +    0.0000 : Y21=    22.5212=            T(1)    **             0.500000 +     0.0000
Y 7=    42.2264=         YCOMPD 6 / THETA 14               +    0.0000 : Y22=     1.8880=           YCOMPD21 /    P(1)               +     0.0000
Y 8=     2.2391=          RNI(14) /           0.379900 +    0.0000 : Y23= 1390.5950=           YCOMPD22 *    WD(1)              +    -0.0000
Y 9= 3971.6445=          XNMAP 14 *          42.203995 +    0.0000 : Y39=     0.7227=            V-19    /    V-9                +     0.0000
Y10=     1.9309=         THETA 14 **          0.500000 +    0.0000 : Y40=     0.9950=           0.000000 -              0.000000 +     0.9950
Y11= 7668.8789=         YCOMPD 9 * YCOMPD10               +    0.0000 : Y41=    51.5327=            HP(14)  *              0.005000 +     0.0000
Y12=    10.0255=           FAR(9)  -           0.000000 +   10.0000 : Y42=     0.9358=            T(24)   -     T(23)             +     0.0000
Y15=     0.0000=         0.000000 -            0.000000 +    0.0000 : Y43=10618.4180=            XN(1)   *              4.490000 +     0.0000

T 1=  375.0002  X=YCOMPD15 Z=            W=           ID=03/11/91 E=2 : T 3=     0.3529  X=RMAP(14) Z=XNMAP 14 W=          ID=LPT X MN E=1
T 2= 2184.6997  X=  XM      Z=XNMAP   1 W=           ID=BYP AREA E=3 : T 4=     0.9950  X=YCOMPD23 Z=  XM       W=          ID=INLETREC E=1

P 1=YCOMPD41--> HPX(1)   : P 4=YTABLE 4--> DEFF

     --VARY-- ---HI--- ---LO---  (+)    OBJECT = TARGET    (+) LIM
C19= AREA(26)  2817.00  2183.00 1.00   AREA(26) YTABLE 2 0.00 L=1

MODE=YCOMPD 3  PLA=  2355.000  ADDPLA=     0.000  PLA LIMIT= PLA
IDES=0  NVAR=10  MAX ERR# 9= 19.PS+A/P+A = 0.00034  MATRX= 0  LOOP= 14
IOMT  LOOPS=  1  MAX ERROR =       0.      = 0.00000

                       B L E E D S    A N D    L E A K A G E S
                       ---------------------------------------
      FR - TO %W(FR)  %W(1)       W     T-R      P        H    DH/DHT :       FR - TO %W(FR)  %W(1)       W     T-R      P        H    DH/DHT
B 3=   3 - 12 0.0520 0.0034    2.481 1138.6 160.041   275.73 0.7000 : B 7=   3 - OB 0.0000 0.0000    0.000 1056.4 124.997   255.06 0.6000
B 5=   3 - 17 0.0090 0.0006    0.429  762.5  43.395   182.72 0.2500 : B 9=   3 - OB 0.0321 0.0021    1.532  973.4  95.607   234.39 0.5000
 STA   3 TOTL 0.0931 0.0060    4.442

      FR - TO %W(FR)  %W(1)       W     T-R      P        H    DH/DHT :       FR - TO %W(FR)  %W(1)       W     T-R      P        H    DH/DHT
B 1=   6 -  9 0.0577 0.0034    2.497 1380.1 297.466   337.73 1.0000 : B 6=   6 - 21 0.0000 0.0000    0.000 1380.1 297.466   337.73 1.0000
B 2=   6 - 11 0.0385 0.0023    1.666 1380.1 297.466   405.14 1.0000 : B 8=   6 - OB 0.0038 0.0002    0.164 1380.1 297.466   337.73 1.0000
B 4=   6 - 15 0.0070 0.0004    0.303 1380.1 302.773   337.73 0.2500
 STA   6 TOTL 0.1070 0.0063    4.630

      FR - TO %W(FR)  %W(1)       W     T-R      P        H    DH/DHT
B10=  22 - OB 0.0000 0.0000    0.000  548.2  15.184   131.04 1.0000
 STA  22 TOTL 0.0000 0.0000    0.000

                      C O M P O N E N T     P E R F O R M A N C E
                      -------------------------------------------
  N  ID        BETA       XN        XN-MAP      HP      HPX/PHP  SF(N,2)    W-MAP   EFF-MAP     R-MAP    SMRELL    FLOW ID     EFF ID   MAPTYP
  1 FAN      0.9502  2364.904     87.724  10252.87     51.53    0.0000   840.738    0.8787    1.3772    24.877  QUIETENG   QUIETENG     1
  3 HPC      1.0266 11277.937     96.499  13417.20    100.20    0.0000    77.312    0.8382   18.4020    23.320   0.  0.      0.  0.       1
 10 HPT      0.0000 11277.937    102.258  13516.52    158.89    0.0000     0.999    0.8944    4.0724     6.267  JAN.2690   JAN.2690     1
 14 LPT      0.0000  2364.904     94.106  10306.54      0.00    0.0000     1.000    0.9222    4.4036     6.380  ANALYTIC   ANALYTIC     1
 14 LPT                         RNISF(1,14),(2,14),(3,14),(4,14)=   1.00250   1.00673   1.00000   1.00000

                          N O Z Z L E     P E R F O R M A N C E
                          -------------------------------------
 NOZZLE       (N)  TYP        FG         FN        RJ      CFG       CD     AREA(TH)  V-EXIT  SF(TH,2) SF(EX,2)   CFGT ID     CDT ID   MAPTYP
PRI (8-9)     18    1     1709.77     910.73   1.3442   0.9934   0.9409    294.19   1178.2     0.371    0.000   CFG MDXX   CD  MDXX     1
SEC (18-19)   25    1    18122.25    6587.46   1.5024   0.9941   0.9554   2185.20    851.5     2.799    0.000   CFG MDXX   CD  MDXX     1
                    F I N A L     E N G I N E     P E R F O R M A N C E
                    -----------------------------------------------------
 BPR(1) RMIX(1) GAINMX(1) ANGMIX(1)     BPR(2) RMIX(2) GAINMX(2) ANGMIX(2)
14.4359  1.1177  0.0000    0.0000       0.0000  0.0000  0.0000    0.0000

   FG       FRAM     WFE   FARST    EPR     WAENG    WACOR   RCOA    FNR1   FNGF
19832.0 12333.8  3543.5 .06775   1.139  736.546  897.343  25.53    9238. 1.0000

   FN      SFC      WFT    FHV    NODISS   EFFTH     FN/WA  EFFOA    WFTR1  WFTGF
 7498.2  0.4726  3543.5 18550.     0      0.3837  10.1802 0.8509    4415. 1.0000

WARNING: TABLE(S) EXTRAPOLATED.

NPTOT = 48      NP1 = 16      NP2 = 16      NP3 = 16

FMT1
(/,2F10.0,F10.2,2F10.1,3F10.2,/,F10.1,2F10.3,F10.4,2F10.1,      ,          2F10.2
IPUNCH =     412         1      1385       450      1251      1553       827
            1178       734       122       123       530      1287      1257
             797      1148
 NAMES =   CASE       ALT        XM      DTAMB    V-KTAS  YCOMPD15    PAMB
         T-AMB(R)   HPX(3)   BLD(9)   BLD(10)     ERAM      WD(1)   WCOR(1)
           P(1)      T(1)


        7.     10000.      0.50       0.0      319.2      0.00     10.11     483.01
     100.2      0.032     0.000    0.9950      736.5     897.3     11.93     507.21


FMT2
(F10.2,4F10.1,F10.2,F10.4,F10.2,/,8F10.2,)
IPUNCH =     314       651       665      1557      1323      1556      1558
             901       895       888      1174      1167        30        23
            1313      1306
 NAMES =   BPR(1)     FG      F-RAM   YCOMPD19    WFT     YCOMPD18  YCOMPD20
           RC-OA     R(25)    R(18)     T(27)     T(20)   AREA(27)  AREA(20)
           WD(27)    WD(20)

     14.44   19832.0   12333.8    7348.6    3543.5    149.55    0.4822     25.53
      1.50      1.34    488.78   1312.71   2185.20    294.19    688.83     47.00

FMT3
(2F10.1,F10.2,4F10.4,F10.1/F10.3,F10.1,6F10.0,)
IPUNCH =    1459      1448      1157       413       416       415       418
             698      1578       274      1554      1554      1554      1554
            1554      1554
 NAMES =   XN(14)    XN(3)     T(10)    CD-18     CFG-19     CD-8      CFG-9
           HP(1)   YCOMPD40  BLDP(9)  YCOMPD16  YCOMPD16  YCOMPD16  YCOMPD16
         YCOMPD16  YCOMPD16

    2364.9   11277.9   2814.81    0.9554    0.9941    0.9409    0.9934   10252.9
     0.995      95.6    99999.    99999.    99999.    99999.    99999.    99999.
```

```
TERMAP (VER 12)  TITLE=  NASA LOW NOISE MODEL (FLOW SCALE DOWN OF MDXX BPR=14 SHORT BYP DUCT MODEL)       DATE= 05-26-92 CASE=    8.0
(CMS  04-06-92) STITLE= 10000 FT, 0.56 MN, MAX CLIMB, RIT=2355 F                                           TIME= 16:15:20 PAGE=     14

  ALT    PAMB    TAMBF  TAMBR   DTAMB DTAMTP PRELHM  KTAS    KCAS    XM     RPR   DEFF    ERAM     P1     T1R   DEFTIP ERAMTP   PTIP  TTIPR
10000. 10.107   23.34 483.01    0.0    0.0    0.0  357.5   310.8  0.560  1.231 0.9950 0.9950 12.442 513.36 0.0000 0.0000  0.000    0.0
```

(N) ID	NSI	T-R	P	W-COR	W	R	EFF	FAR	AREA	XMN	PS	THETA	DELTA	H	SF-N,1	(N)
1 FAN	0	513.4	12.442	904.052	769.335	1.2664	0.8958	0.00000	0.0	0.000	0.000	0.990	0.847	122.68	1.0191	1
2 DELP	0	553.4	15.757	46.663	48.434	0.9929	0.0000	0.00000	384.3	0.210	15.279	1.067	1.072	132.29	0.2349	2
3 HPC	0	553.4	15.645	46.997	48.434	19.7635	0.8580	0.00000	0.0	0.000	0.000	1.067	1.065	132.29	1.0241	3
4 COOL	0	1385.1	309.192	3.412	43.925	0.0000	0.0000	0.00000	0.0	0.000	0.000	2.671	21.039	339.03	0.0000	4
5 DELP	0	1385.1	309.192	3.412	43.925	1.0000	0.0000	0.00000	23.7	0.257	295.757	2.671	21.039	339.03	0.0000	5
6 DELP	0	1385.1	309.192	3.412	43.925	0.9767	0.0000	0.00000	20.6	0.299	291.166	2.671	21.039	339.03	0.4000	6
7 HX C	0	1385.1	301.982	3.119	39.225	1.0000	0.0000	0.00000	26.7	0.205	293.492	2.671	20.548	339.03	0.0000	7
8 BURN	0	1369.8	301.982	3.102	39.225	0.9809	0.9990	0.00000	26.5	0.205	293.482	2.641	20.548	335.03	0.6799	8
9 COOL	0	2896.7	296.203	4.716	40.221	0.0000	0.0000	0.02539	0.0	0.000	0.000	5.585	20.155	787.90	0.0000	9
10 HPT	0	2814.8	296.203	5.086	42.755	4.8360	0.8986	0.02385	0.0	0.000	0.000	5.247	20.155	761.29	1.0046	10
11 PWRK	0	2044.0	61.249	20.365	42.755	0.0000	0.0000	0.02385	0.0	0.000	0.000	3.941	4.168	531.78	0.0007	11
12 COOL	0	2029.5	61.249	21.095	44.446	0.0000	0.0000	0.02292	0.0	0.000	0.000	3.913	4.168	527.02	0.0000	12
13 DELP	0	1985.6	61.249	22.048	46.965	0.9970	0.0000	0.02167	196.0	0.201	59.658	3.828	4.168	513.62	0.1163	13
14 LPT	0	1985.6	61.064	22.620	46.964	4.4377	0.9288	0.02167	0.0	0.000	0.000	3.729	4.155	513.62	1.0003	14
15 COOL	0	1419.3	13.760	82.973	46.964	0.0000	0.0000	0.02167	0.0	0.000	0.000	2.737	0.936	355.46	0.0000	15
16 DELP	0	1419.1	13.760	83.510	47.271	0.9943	0.0000	0.02152	406.6	0.386	12.468	2.736	0.936	355.35	0.0609	16
17 COOL	0	1419.1	13.682	83.990	47.271	0.0000	0.0000	0.02152	0.0	0.000	0.000	2.736	0.931	355.35	0.0000	17
18 NOZZ	0	1413.6	13.682	84.598	47.707	1.3537	0.0000	0.02132	1.0	0.000	0.000	2.725	0.931	353.79	0.0000	18
19 TH8	0	1308.1	10.107	110.167	47.707	1.3537	0.0000	0.02132	294.2	0.684	10.105	2.522	0.688	325.48	1.0000	19
20 EX9	0	1308.1	10.107	110.167	47.707	1.0000	0.0000	0.02132	294.2	0.684	10.107	2.522	0.688	325.48	0.0000	20
21 COOL	0	553.4	15.757	694.529	720.901	0.0000	0.0000	0.00000	0.0	0.000	0.000	1.067	1.072	132.29	0.0000	21
22 DELP	0	553.4	15.757	694.529	720.901	0.9967	0.0000	0.00000	3500.0	0.362	14.396	1.067	1.072	132.29	0.0378	22
23 HX H	0	553.4	15.705	696.807	720.901	1.0000	0.0185	0.00000	3500.0	0.363	14.339	1.067	1.069	132.29	0.0000	23
24 DELP	0	554.3	15.705	697.378	720.901	1.0000	0.0000	0.00000	3500.0	0.363	14.336	1.069	1.069	132.50	0.0000	24
25 NOZZ	0	554.3	15.705	697.378	720.901	1.5540	0.0000	0.00000	1.0	0.000	0.000	1.069	1.069	132.51	0.0000	25
26 TH18	0	488.6	10.107	1017.462	720.901	1.5540	0.0000	0.00000	2184.8	0.819	10.106	0.942	0.688	116.75	1.0000	26
27 EX19	0	488.6	10.107	1017.462	720.901	1.0000	0.0000	0.00000	2184.8	0.819	10.107	0.942	0.688	116.75	0.0000	27

```
S 1= RC-OA  =   24.8506 : S 2=EMAP(7) =  -15.3397 : S 3= EFF(23)=     0.0185

Y 1=     0.8992= COMP POLY EFF AT STATION  1                     : Y16=99999.0000=           0.000000 -          0.000000 +99999.0000
Y 2=     0.9039= COMP POLY EFF AT STATION  3                     : Y17=    5.5995=            P(25)  -   PS(26)            +     0.0000
Y 3= 2355.1499=           T(10)   -         459.669922 +  0.0000 : Y18=  164.8494=          YCOMPD17 *          29.440002 +     0.0000
Y 4=  229.5081=           H(10)   -    H(11)           +  0.0000 : Y19= 6946.9414=            FN     - YCOMPD18             +     0.0000
Y 5=   43.7402=         YCOMPD 4 / THETA 10            +  0.0000 : Y20=    0.5161=           WFE     / YCOMPD19             +     0.0000
Y 6=  158.1592=           H(14)   -    H(15)           +  0.0000 : Y21=   22.6574=            T(1)   **          0.500000 +     0.0000
Y 7=   42.4151=         YCOMPD 6 / THETA 14            +  0.0000 : Y22=    1.8210=          YCOMPD21 /    P(1)             +     0.0000
Y 8=    2.2724=           RNI(14) /          0.379900 +  0.0000 : Y23= 1400.9917=          YCOMPD22 *   WD(1)             +    -0.0000
Y 9= 3984.5933=         XNMAP 14 *          42.203995 +  0.0000 : Y39=    0.7460=            V-19   /    V-9              +     0.0000
Y10=    1.9310=         THETA 14 **          0.500000 +  0.0000 : Y40=    0.9950=          0.000000 -          0.000000 +     0.9950
Y11= 7694.3320=         YCOMPD 9 * YCOMPD10           +  0.0000 : Y41=   52.5458=           HP(14)  *          0.005000 +     0.0000
Y12=   10.0254=           FAR(9)  -          0.000000 + 10.0000 : Y42=    0.9082=            T(24)  -    T(23)            +     0.0000
Y15=    0.0000=         0.000000 -           0.000000 +  0.0000 : Y43=10653.6562=            XN(1)  *          4.490000 +     0.0000

T 1=  375.0002  X=YCOMPD15 Z=           W=          ID=03/11/91 E=2 : T 3=      0.3557  X=RMAP(14) Z=XNMAP 14 W=          ID=LPT X MN E=1
T 2= 2184.6997  X=  XM       Z=XNMAP  1 W=          ID=BYP AREA E=3 : T 4=      0.9950  X=YCOMPD23 Z=  XM      W=          ID=INLETREC E=1

P 1=YCOMPD41--> HPX(1)  : P 4=YTABLE 4--> DEFF

    --VARY-- ---HI--- ---LO---  (+)   OBJECT = TARGET   (+) LIM
C19= AREA(26)  2817.00  2183.00 1.00  AREA(26) YTABLE 2 0.00 L=1

MODE=YCOMPD 3  PLA=  2355.000  ADDPLA=    0.000  PLA LIMIT= PLA
IDES=0  NVAR=10  MAX ERR# 6= 10.HP+10*WD = 0.00014  MATRX= 0  LOOP= 15
IOMT  LOOPS=  1  MAX ERROR =        0.      = 0.00000

                    B L E E D S    A N D    L E A K A G E S
                    ---------------------------------------
     FR - TO %W(FR)  %W(1)      W     T-R      P        H    DH/DHT :      FR - TO %W(FR)  %W(1)      W     T-R      P        H    DH/DHT
B 3=  3 - 12 0.0520 0.0033   2.519 1143.7 162.937  277.01 0.7000 : B 7=  3 - OB 0.0000 0.0000   0.000 1061.5 127.414  256.33 0.6000
B 5=  3 - 17 0.0090 0.0006   0.436  767.7  44.514  183.97 0.2500 : B 9=  3 - OB 0.0321 0.0020   1.555  978.5  97.595  235.66 0.5000
 STA  3 TOTL 0.0931 0.0059   4.509

     FR - TO %W(FR)  %W(1)      W     T-R      P        H    DH/DHT :      FR - TO %W(FR)  %W(1)      W     T-R      P        H    DH/DHT
B 1=  6 -  9 0.0577 0.0033   2.534 1385.1 301.982  339.03 1.0000 : B 6=  6 - 21 0.0000 0.0000   0.000 1385.1 301.982  339.03 1.0000
B 2=  6 - 11 0.0385 0.0022   1.691 1385.1 301.982  406.72 1.0000 : B 8=  6 - OB 0.0038 0.0002   0.167 1385.1 301.982  339.03 1.0000
B 4=  6 - 15 0.0070 0.0004   0.307 1385.1 307.389  339.03 0.2500
 STA  6 TOTL 0.1070 0.0061   4.700

     FR - TO %W(FR)  %W(1)      W     T-R      P        H    DH/DHT
B10= 22 - OB 0.0000 0.0000   0.000  553.4  15.705  132.29 1.0000
 STA 22 TOTL 0.0000 0.0000   0.000

                 C O M P O N E N T    P E R F O R M A N C E
                 -------------------------------------------
  N  ID       BETA       XN        XN-MAP     HP     HPX/PHP  SF(N,2)    W-MAP   EFF-MAP    R-MAP    SMRELL    FLOW ID    EFF ID   MAPTYP
  1 FAN     0.9925  2372.753     87.486  10456.80    52.55    0.0000  847.023   0.8790    1.3628    27.431  QUIETENG  QUIETENG     1
  3 HPC     1.0280 11301.141     96.244  13623.24   100.20    0.0000   76.207   0.8378   18.0588    23.537    0.  0.     0.  0.      1
 10 HPT     0.0000 11301.141    102.467  13721.45   161.95    0.0000    0.999   0.8945    4.0729     6.274  JAN.2690  JAN.2690      1
 14 LPT     0.0000  2372.753     94.413  10509.17     0.00    0.0000    1.000   0.9223    4.4377     6.389  ANALYTIC  ANALYTIC      1
 14 LPT                       RNISF(1,14),(2,14),(3,14),(4,14)=  1.00250  1.00675   1.00000   1.00000

                      N O Z Z L E    P E R F O R M A N C E
                      ------------------------------------
 NOZZLE       (N)  TYP      FG        FN       RJ     CFG      CD     AREA(TH)  V-EXIT  SF(TH,2) SF(EX,2)   CFGT ID    CDT ID   MAPTYP
PRI (8-9)     18    1    1753.61    845.23   1.3537  0.9934  0.9413    294.19   1190.5    0.392    0.000   CFG MDXX  CD  MDXX      1
SEC (18-19)   25    1   19787.03   6266.57   1.5540  0.9944  0.9583   2184.80    888.1    2.961    0.000   CFG MDXX  CD  MDXX      1

                F I N A L    E N G I N E    P E R F O R M A N C E
                -------------------------------------------------
 BPR(1) RMIX(1) GAINMX(1) ANGMIX(1)    BPR(2) RMIX(2) GAINMX(2) ANGMIX(2)
14.8841  1.1479  0.0000    0.0000      0.0000  0.0000  0.0000    0.0000

   FG      FRAM     WFE   FARST   EPR    WAENG    WACOR    RCOA    FNR1   FNGF
21540.6 14428.8  3585.5 .06775  1.100  769.335  904.052  24.85    8400. 1.0000

   FN      SFC     WFT     FHV   NODISS   EFFTH    FN/WA  EFFOA    WFTR1  WFTGF
 7111.8  0.5042  3585.5 18550.     0     0.3849   9.2441 0.8512    4257. 1.0000

WARNING: TABLE(S) EXTRAPOLATED.

NPTOT = 48      NP1 = 16      NP2 = 16      NP3 = 16

FMT1
(/,2F10.0,F10.2,2F10.1,3F10.2,/,F10.1,2F10.3,F10.4,2F10.1,      ,        2F10.2
IPUNCH =   412         1       1385       450      1251      1553       827
          1178       734        122       123       530      1287      1257
           797      1148
 NAMES =  CASE       ALT        XM      DTAMB    V-KTAS   YCOMPD15   PAMB
        T-AMB(R)   HPX(3)    BLD(9)    BLD(10)    ERAM      WD(1)    WCOR(1)
          P(1)      T(1)


        8.     10000.      0.56       0.0      357.5      0.00     10.11     483.01
    100.2       0.032     0.000    0.9950      769.3     904.1     12.44     513.36


FMT2
(F10.2,4F10.1,F10.2,F10.4,F10.2,/,8F10.2,)
IPUNCH =   314       651       665      1557      1323      1556      1558
           901       895       888      1174      1167        30        23
          1313      1306
 NAMES =  BPR(1)     FG       F-RAM   YCOMPD19   WFT      YCOMPD18 YCOMPD20
          RC-OA     R(25)     R(18)     T(27)     T(20)   AREA(27) AREA(20)
          WD(27)    WD(20)

    14.88    21540.6   14428.8    6946.9    3585.5    164.85    0.5161     24.85
     1.55       1.35    488.63   1308.07   2184.80    294.19    720.90     47.71

FMT3
(2F10.1,F10.2,4F10.4,F10.1/F10.3,F10.1,6F10.0,)
IPUNCH =  1459      1448      1157       413       416       415       418
           698      1578       274      1554      1554      1554      1554
          1554      1554
 NAMES =  XN(14)    XN(3)     T(10)    CD-18    CFG-19    CD-8      CFG-9
          HP(1)   YCOMPD40 BLDP(9)  YCOMPD16 YCOMPD16 YCOMPD16 YCOMPD16
        YCOMPD16 YCOMPD16

   2372.8   11301.1   2814.82    0.9583    0.9944    0.9413    0.9934   10456.8
   [illegible]   [illegible]   [illegible]    99999.    99999.    99999.    99999.    99999.
```

```
TERMAP (VER 12)  TITLE=  NASA LOW NOISE MODEL (FLOW SCALE DOWN OF MDXX BPR=14 SHORT BYP DUCT MODEL)        DATE= 05-26-92 CASE=    9.0
(CMS  04-06-92) STITLE= 14000 FT, 0.60 MN, MAX CLIMB, RIT=2355 F                                           TIME= 16:15:20 PAGE=     15

   ALT    PAMB    TAMBF  TAMBR   DTAMB DTAMTP PRELHM  KTAS    KCAS     XM      RPR    DEFF    ERAM     P1     T1R    DEFTIP ERAMTP  PTIP   TTIPR
 14000.  8.633    9.07 468.74    0.0    0.0    0.0  377.4   309.6  0.600  1.269 0.9950 0.9950 10.957 502.56 0.0000 0.0000  0.000    0.0
```

(N)	ID	NSI	T-R	P	W-COR	W	R	EFF	FAR	AREA	XMN	PS	THETA	DELTA	H	SF-N,1	(N)
1	FAN	0	502.6	10.957	928.505	703.293	1.2812	0.8946	0.00000	0.0	0.000	0.000	0.969	0.746	120.09	1.0191	1
2	DELP	0	543.8	14.039	47.900	44.686	0.9925	0.0000	0.00000	384.3	0.216	13.589	1.049	0.955	129.99	0.2349	2
3	HPC	0	543.8	13.933	48.276	44.698	20.4719	0.8587	0.00000	0.0	0.000	0.000	1.049	0.948	129.99	1.0241	3
4	COOL	0	1375.7	285.235	3.401	40.536	0.0000	0.0000	0.00000	0.0	0.000	0.000	2.652	19.409	336.58	0.0000	4
5	DELP	0	1375.7	285.235	3.401	40.536	1.0000	0.0000	0.00000	23.7	0.256	272.919	2.652	19.409	336.58	0.0000	5
6	DELP	0	1375.7	285.235	3.401	40.536	0.9768	0.0000	0.00000	20.6	0.298	268.713	2.652	19.409	336.59	0.4000	6
7	HX C	0	1375.7	278.626	3.110	36.199	1.0000	0.0000	0.00000	26.7	0.205	270.844	2.652	18.959	336.59	0.0000	7
8	BURN	0	1360.4	278.626	3.092	36.199	0.9810	0.9990	0.00000	26.5	0.205	270.835	2.623	18.959	332.59	0.6799	8
9	COOL	0	2896.9	273.329	4.717	37.124	0.0000	0.0000	0.02554	0.0	0.000	0.000	5.585	18.599	788.10	0.0000	9
10	HPT	0	2814.5	273.329	5.087	39.463	4.8374	0.8984	0.02399	0.0	0.000	0.000	5.246	18.599	761.34	1.0046	10
11	PWRK	0	2044.0	56.503	20.376	39.463	0.0000	0.0000	0.02399	0.0	0.000	0.000	3.941	3.845	531.87	0.0007	11
12	COOL	0	2029.1	56.503	21.104	41.023	0.0000	0.0000	0.02306	0.0	0.000	0.000	3.912	3.845	527.00	0.0000	12
13	DELP	0	1984.8	56.503	22.055	43.348	0.9970	0.0000	0.02179	196.0	0.201	55.034	3.827	3.845	513.46	0.1163	13
14	LPT	0	1984.8	56.332	22.628	43.347	4.6008	0.9295	0.02179	0.0	0.000	0.000	3.727	3.833	513.47	1.0003	14
15	COOL	0	1406.8	12.244	85.686	43.347	0.0000	0.0000	0.02179	0.0	0.000	0.000	2.712	0.833	352.11	0.0000	15
16	DELP	0	1406.6	12.244	86.241	43.631	0.9938	0.0000	0.02165	406.6	0.401	11.007	2.712	0.833	352.01	0.0609	16
17	COOL	0	1406.6	12.169	86.775	43.631	0.0000	0.0000	0.02165	0.0	0.000	0.000	2.712	0.828	352.01	0.0000	17
18	NOZZ	0	1401.1	12.169	87.403	44.033	1.4095	0.0000	0.02145	1.0	0.000	0.000	2.701	0.828	350.45	0.0000	18
19	TH8	0	1283.0	8.633	117.887	44.033	1.4095	0.0000	0.02145	294.2	0.730	8.633	2.474	0.587	318.84	1.0000	19
20	EX9	0	1283.0	8.633	117.887	44.033	1.0000	0.0000	0.02145	294.2	0.730	8.633	2.474	0.587	318.84	0.0000	20
21	COOL	0	543.8	14.039	705.984	658.607	0.0000	0.0000	0.00000	0.0	0.000	0.000	1.049	0.955	129.99	0.0000	21
22	DELP	0	543.8	14.039	705.984	658.607	0.9966	0.0000	0.00000	3500.0	0.369	12.781	1.049	0.955	129.99	0.0378	22
23	HX H	0	543.8	13.991	708.385	658.607	1.0000	0.0185	0.00000	3500.0	0.370	12.728	1.049	0.952	129.99	0.0000	23
24	DELP	0	544.8	13.991	708.983	658.607	1.0000	0.0000	0.00000	3500.0	0.371	12.725	1.050	0.952	130.21	0.0000	24
25	NOZZ	0	544.8	13.991	708.983	658.607	1.6206	0.0000	0.00000	1.0	0.000	0.000	1.050	0.952	130.21	0.0000	25
26	TH18	0	474.5	8.633	1072.273	658.607	1.6206	0.0000	0.00000	2185.2	0.860	8.632	0.915	0.587	113.36	1.0000	26
27	EX19	0	474.5	8.633	1072.273	658.607	1.0000	0.0000	0.00000	2185.2	0.860	8.633	0.915	0.587	113.36	0.0000	27

```
S 1= RC-OA   =    26.0314 : S 2=EMAP(7) =  -15.3438 : S 3= EFF(23)=     0.0185

Y 1=      0.8983= COMP POLY EFF AT STATION  1                       : Y16=99999.0000=          0.000000 -           0.000000 +99999.0000
Y 2=      0.9047= COMP POLY EFF AT STATION  3                       : Y17=     5.3590=          P(25)   -   PS(26)             +     0.0000
Y 3= 2354.8560=             T(10)    -         459.669922 +    0.0000 : Y18=  157.7684=        YCOMPD17 *            29.440002 +     0.0000
Y 4=   229.4705=            H(10)    -    H(11)           +    0.0000 : Y19= 6333.7891=          FN      - YCOMPD18            +     0.0000
Y 5=    43.7389=          YCOMPD 4 / THETA 10             +    0.0000 : Y20=     0.5255=         WFE      / YCOMPD19            +     0.0000
Y 6=   161.3550=            H(14)    -    H(15)           +    0.0000 : Y21=    22.4180=          T(1)    **            0.500000 +     0.0000
Y 7=    43.2899=          YCOMPD 6 / THETA 14             +    0.0000 : Y22=     2.0459=        YCOMPD21 /    P(1)              +     0.0000
Y 8=     2.0972=            RNI(14) /          0.379900 +    0.0000 : Y23= 1438.8867=        YCOMPD22 *   WD(1)              +    -0.0000
Y 9= 4029.6628=           XNMAP 14 *         42.203995 +    0.0000 : Y39=     0.7301=          V-19    /   V-9                +     0.0000
Y10=      1.9306=         THETA 14 **          0.500000 +    0.0000 : Y40=     0.9950=        0.000000 -            0.000000 +     0.9950
Y11= 7779.7695=           YCOMPD 9 * YCOMPD10             +    0.0000 : Y41=    49.4791=         HP(14)   *            0.005000 +     0.0000
Y12=     10.0255=           FAR(9)   -          0.000000 +   10.0000 : Y42=     0.9170=          T(24)   -     T(23)            +     0.0000
Y15=      0.0000=         0.000000 -            0.000000 +    0.0000 : Y43=10771.9609=          XN(1)   *            4.490000 +     0.0000

T 1=   375.0002  X=YCOMPD15 Z=           W=          ID=03/11/91 E=2 : T 3=     0.3695  X=RMAP(14) Z=XNMAP 14 W=          ID=LPT X MN E=1
T 2= 2184.6992  X=  XM      Z=XNMAP  1 W=          ID=BYP AREA E=3 : T 4=     0.9950  X=YCOMPD23 Z=  XM     W=          ID=INLETREC E=1

P 1=YCOMPD41--> HPX(1)  : P 4=YTABLE 4--> DEFF

     --VARY-- ---HI--- ---LO---  (+)   OBJECT = TARGET   (+) LIM
C19= AREA(26)  2817.00  2183.00 1.00  AREA(26) YTABLE 2 0.00 L=1

MODE=YCOMPD 3  PLA=  2355.000  ADDPLA=     0.000  PLA LIMIT= PLA
IDES=0  NVAR=10  MAX ERR# 1= 19.CONSTR.  = 0.00023  MATRX= 0  LOOP= 14
IOMT  LOOPS=  1  MAX ERROR =        0.     = 0.00000
```

B L E E D S   A N D   L E A K A G E S

```
       FR - TO %W(FR)  %W(1)       W     T-R      P       H    DH/DHT :        FR - TO %W(FR)  %W(1)       W     T-R      P       H    DH/DHT
B 3=   3 - 12 0.0520 0.0033    2.324 1134.2 149.532  274.61 0.7000 : B 7=   3 - OB 0.0000 0.0000    0.000 1052.0 116.666  253.95 0.6000
B 5=   3 - 17 0.0090 0.0006    0.402  758.1  40.283  181.64 0.2500 : B 9=   3 - OB 0.0321 0.0020    1.435  969.0  89.126  233.29 0.5000
 STA   3 TOTL 0.0931 0.0059    4.161

       FR - TO %W(FR)  %W(1)       W     T-R      P       H    DH/DHT :        FR - TO %W(FR)  %W(1)       W     T-R      P       H    DH/DHT
B 1=   6 -  9 0.0577 0.0033    2.339 1375.7 278.626  336.59 1.0000 : B 6=   6 - 21 0.0000 0.0000    0.000 1375.7 278.626  336.59 1.0000
B 2=   6 - 11 0.0385 0.0022    1.561 1375.7 278.626  403.77 1.0000 : B 8=   6 - OB 0.0038 0.0002    0.154 1375.7 278.626  336.59 1.0000
B 4=   6 - 15 0.0070 0.0004    0.284 1375.7 283.583  336.59 0.2500
 STA   6 TOTL 0.1070 0.0062    4.337

       FR - TO %W(FR)  %W(1)       W     T-R      P       H    DH/DHT
B10=  22 - OB 0.0000 0.0000    0.000  543.8  13.991  129.99 1.0000
 STA  22 TOTL 0.0000 0.0000    0.000
```

C O M P O N E N T   P E R F O R M A N C E

```
  N  ID       BETA       XN      XN-MAP      HP    HPX/PHP  SF(N.2)    W-MAP   EFF-MAP    R-MAP    SMRELL    FLOW ID    EFF ID   MAPTYP
  1 FAN     1.0061  2399.101    89.402   9846.37    49.48   0.0000   869.934   0.8779   1.3829    26.561   QUIETENG  QUIETENG      1
  3 HPC     1.0254 11259.238    96.728  12563.54   100.20   0.0000    78.282   0.8385  18.7028    23.147    0.  0.     0.  0.       1
 10 HPT     0.0000 11259.238   102.093  12663.86   148.35   0.0000     0.999   0.8943   4.0740     6.263   JAN.2690  JAN.2690      1
 14 LPT     0.0000  2399.101    95.481   9895.82     0.00   0.0000     1.001   0.9231   4.6008     6.421   ANALYTIC  ANALYTIC      1
 14 LPT                       RNISF(1,14),(2,14),(3,14),(4,14)=  1.00250  1.00665  1.00000   1.00000
```

N O Z Z L E   P E R F O R M A N C E

```
  NOZZLE      (N)  TYP      FG         FN       RJ      CFG      CD     AREA(TH)  V-EXIT  SF(TH.2) SF(EX.2)   CFGT ID    CDT ID  MAPTYP
PRI (8-9)     18    1    1711.12    826.53   1.4095  0.9937  0.9437    294.19  1258.2     0.367    0.000   CFG MDXX  CD  MDXX     1
SEC (18-19)   25    1   18702.57   5665.03   1.6206 .0.9946  0.9621   2185.20   918.6     2.782    0.000   CFG MDXX  CD  MDXX     1
```

F I N A L   E N G I N E   P E R F O R M A N C E

```
 BPR(1) RMIX(1) GAINMX(1) ANGMIX(1)     BPR(2) RMIX(2) GAINMX(2) ANGMIX(2)
14.7387  1.1498  0.0000    0.0000      0.0000  0.0000  0.0000    0.0000

   FG      FRAM    WFE   FARST   EPR    WAENG    WACOR   RCOA    FNR1   FNGF
20413.7 13922.1  3328.2 .06775  1.111  703.293  928.505  26.03   8707. 1.0000

   FN      SFC     WFT    FHV   NODISS   EFFTH    FN/WA  EFFOA   WFTR1  WFTGF
 6491.6  0.5127  3328.2 18550.    0     0.3961   9.2302 0.8511   4535. 1.0000

WARNING: TABLE(S) EXTRAPOLATED.

NPTOT = 48      NP1 = 16      NP2 = 16      NP3 = 16

FMT1
(/.2F10.0,F10.2,2F10.1,3F10.2./.F10.1.2F10.3,F10.4,2F10.1.          ,          2F10.2
IPUNCH =    412          1       1385        450       1251       1553        827
           1178        734        122        123        530       1287       1257
            797       1148
 NAMES =   CASE        ALT        XM      DTAMB     V-KTAS   YCOMPD15   PAMB
        T-AMB(R)    HPX(3)    BLD(9)    BLD(10)     ERAM       WD(1)    WCOR(1)
           P(1)       T(1)


         9.     14000.      0.60       0.0       377.4       0.00       8.63     468.74
     100.2       0.032      0.000     0.9950      703.3      928.5      10.96     502.56


FMT2
(F10.2,4F10.1,F10.2,F10.4,F10.2./,8F10.2.)
IPUNCH =    314        651        665       1557       1323       1556       1558
            901        895        888       1174       1167         30         23
           1313       1306
 NAMES =  BPR(1)       FG       F-RAM   YCOMPD19     WFT      YCOMPD18  YCOMPD20
           RC-OA      R(25)     R(18)      T(27)      T(20)   AREA(27)  AREA(20)
           WD(27)     WD(20)

     14.74   20413.7   13922.1     6333.8     3328.2     157.77     0.5255      26.03
      1.62      1.41    474.45    1282.95    2185.20     294.19     658.61      44.03

FMT3
(2F10.1,F10.2.4F10.4.F10.1/F10.3.F10.1,6F10.0.)
IPUNCH =   1459       1448       1157        413        416        415        418
            698       1578        274       1554       1554       1554       1554
           1554       1554
 NAMES =  XN(14)     XN(3)      T(10)     CD-18     CFG-19      CD-8      CFG-9
           HP(1)   YCOMPD40   BLDP(9)   YCOMPD16  YCOMPD16  YCOMPD16  YCOMPD16
        YCOMPD16  YCOMPD16

    2399.1   11259.2   2814.53     0.9621     0.9946     0.9437     0.9937     9846.4
     0.995      89.1    99999.     99999.     99999.     99999.     99999.     99999.
```

```
TERMAP (VER 12)  TITLE=  NASA LOW NOISE MODEL (FLOW SCALE DOWN OF MDXX BPR=14 SHORT BYP DUCT MODEL)        DATE= 05-26-92 CASE=  10.0
(CMS  04-06-92) STITLE= 20000 FT, 0.67 MN, MAX CLIMB, RIT=2355 F                                           TIME= 16:15:20 PAGE=    16

   ALT    PAMB   TAMBF  TAMBR  DTAMB DTAMTP PRELHM  KTAS   KCAS    XM     RPR   DEFF   ERAM     P1    T1R   DEFTIP ERAMTP  PTIP  TTIPR
 20000.  6.753 -12.32 447.35   0.0    0.0    0.0  411.7  309.3  0.670  1.345 0.9950 0.9950  9.081 487.61 0.0000 0.0000  0.000   0.0

(N) ID      NSI    T-R        P        W-COR      W        R        EFF       FAR       AREA    XMN      PS     THETA  DELTA     H     SF-N,1  (N)
--- --      ---    ---        -        -----      -        -        ---       ---       ----    ---      --     -----  -----     -     ------  ---
 1 FAN       0    487.6     9.081    962.304  613.248  1.3036   0.8945   0.00000      0.0   0.000     0.000   0.940  0.618   116.51  1.0191    1
 2 DELP      0    530.6    11.838     49.630   39.526  0.9919   0.0000   0.00000    384.3   0.224    11.430   1.023  0.806   126.81  0.2349    2
 3 HPC       0    530.6    11.742     50.044   39.534 21.4756   0.8592   0.00000      0.0   0.000     0.000   1.023  0.799   126.81  1.0241    3
 4 COOL      0   1362.8   252.167      3.387   35.853  0.0000   0.0000   0.00000      0.0   0.000     0.000   2.627 17.159   333.21  0.0000    4
 5 DELP      0   1362.8   252.167      3.387   35.853  1.0000   0.0000   0.00000     23.7   0.255   241.378   2.627 17.159   333.21  0.0000    5
 6 DELP      0   1362.8   252.167      3.387   35.853  0.9770   0.0000   0.00000     20.6   0.296   237.696   2.627 17.159   333.21  0.4000    6
 7 HX C      0   1362.8   246.379      3.096   32.017  1.0000   0.0000   0.00000     26.7   0.204   239.561   2.627 16.765   333.21  0.0000    7
 8 BURN      0   1347.4   246.379      3.078   32.017  0.9812   0.9990   0.00000     26.5   0.204   239.554   2.598 16.765   329.22  0.6799    8
 9 COOL      0   2897.7   241.739      4.719   32.841  0.0000   0.0000   0.02575      0.0   0.000     0.000   5.587 16.449   788.57  0.0000    9
10 HPT       0   2814.7   241.739      5.088   34.910  4.8368   0.8981   0.02419      0.0   0.000     0.000   5.246 16.449   761.59  1.0046   10
11 PWRK      0   2044.7    49.979     20.381   34.910  0.0000   0.0000   0.02419      0.0   0.000     0.000   3.942  3.401   532.19  0.0007   11
12 COOL      0   2029.2    49.979     21.107   36.290  0.0000   0.0000   0.02325      0.0   0.000     0.000   3.912  3.401   527.15  0.0000   12
13 DELP      0   1984.3    49.979     22.054   38.346  0.9970   0.0000   0.02198    196.0   0.201    48.680   3.826  3.401   513.43  0.1163   13
14 LPT       0   1984.3    49.828     22.628   38.345  4.8272   0.9299   0.02198      0.0   0.000     0.000   3.726  3.391   513.44  1.0003   14
15 COOL      0   1390.9    10.322     89.402   38.345  0.0000   0.0000   0.02198      0.0   0.000     0.000   2.682  0.702   347.89  0.0000   15
16 DELP      0   1390.8    10.322     89.981   38.596  0.9932   0.0000   0.02183    406.6   0.423     9.172   2.681  0.702   347.80  0.0609   16
17 COOL      0   1390.8    10.252     90.596   38.596  0.0000   0.0000   0.02183      0.0   0.000     0.000   2.681  0.698   347.80  0.0000   17
18 NOZZ      0   1385.3    10.252     91.250   38.952  1.5181   0.0000   0.02163      1.0   0.000     0.000   2.671  0.698   346.25  0.0000   18
19  TH8      0   1244.2     6.753    131.282   38.952  1.5181   0.0000   0.02163    294.2   0.808     6.752   2.399  0.460   308.61  1.0000   19
20  EX9      0   1244.2     6.753    131.282   38.952  1.0000   0.0000   0.02163    294.2   0.808     6.753   2.399  0.460   308.61  0.0000   20
--- --      ---    ---        -        -----      -        -        ---       ---       ----    ---      --     -----  -----     -     ------  ---
21 COOL      0    530.6    11.838    720.375  573.721  0.0000   0.0000   0.00000      0.0   0.000     0.000   1.023  0.806   126.81  0.0000   21
22 DELP      0    530.6    11.838    720.375  573.721  0.9965   0.0000   0.00000   3500.0   0.378    10.728   1.023  0.806   126.81  0.0378   22
23 HX H      0    530.6    11.796    722.939  573.721  1.0000   0.0185   0.00000   3500.0   0.379    10.681   1.023  0.803   126.81  0.0000   23
24 DELP      0    531.5    11.796    723.573  573.721  1.0000   0.0000   0.00000   3500.0   0.380    10.679   1.025  0.803   127.03  0.0000   24
25 NOZZ      0    531.5    11.796    723.573  573.721  1.7467   0.0000   0.00000      1.0   0.000     0.000   1.025  0.803   127.03  0.0000   25
26 TH18      0    453.1     6.753   1166.879  573.721  1.7467   0.0000   0.00000   2184.8   0.929     6.753   0.874  0.460   108.24  1.0000   26
27 EX19      0    453.1     6.753   1166.879  573.721  1.0000   0.0000   0.00000   2184.8   0.929     6.753   0.874  0.460   108.24  0.0000   27
--- --      ---    ---        -        -----      -        -        ---       ---       ----    ---      --     -----  -----     -     ------  ---

S 1= RC-OA  =   27.7698 : S 2=EMAP(7) =  -15.3480 : S 3= EFF(23)=    0.0185

Y 1=     0.8984= COMP POLY EFF AT STATION  1                          : Y16=99999.0000=          0.000000 -             0.000000 +99999.0000
Y 2=     0.9056= COMP POLY EFF AT STATION  3                          : Y17=    5.0428=             P(25)  -   PS(26)            +     0.0000
Y 3= 2355.0105=             T(10)   -        459.669922 +     0.0000 : Y18=  148.4603=          YCOMPD17 *            29.440002 +     0.0000
Y 4=  229.3999=             H(10)   -    H(11)          +     0.0000 : Y19= 5473.2461=            FN      - YCOMPD18             +     0.0000
Y 5=   43.7250=          YCOMPD 4 / THETA 10            +     0.0000 : Y20=    0.5424=           WFE      / YCOMPD19             +     0.0000
Y 6=  165.5439=             H(14)   -    H(15)          +     0.0000 : Y21=   22.0818=            T(1)    **            0.500000 +     0.0000
Y 7=   44.4257=          YCOMPD 6 / THETA 14            +     0.0000 : Y22=    2.4317=          YCOMPD21  /   P(1)               +     0.0000
Y 8=    1.8556=            RNI(14) /          0.379900 +     0.0000 : Y23= 1491.2642=          YCOMPD22  *  WD(1)               +    -0.0000
Y 9= 4089.1970=          XNMAP 14 *          42.203995 +     0.0000 : Y39=    0.7065=            V-19    /  V-9                 +     0.0000
Y10=    1.9304=          THETA 14 **          0.500000 +     0.0000 : Y40=    0.9950=          0.000000  -            0.000000 +     0.9950
Y11= 7893.6445=          YCOMPD 9 * YCOMPD10            +     0.0000 : Y41=   44.9062=           HP(14)   *            0.005000 +     0.0000
Y12=   10.0258=           FAR(9)   -          0.000000 +    10.0000 : Y42=    0.9299=            T(24)   -    T(23)             +     0.0000
Y15=    0.0000=          0.000000 -           0.000000 +     0.0000 : Y43=10929.6289=            XN(1)   *            4.490000 +     0.0000

T 1=  375.0002  X=YCOMPD15 Z=            W=              ID=03/11/91 E=2 : T 3=     0.3918  X=RMAP(14) Z=XNMAP 14 W=             ID=LPT X MN E=1
T 2= 2184.6992  X=  XM       Z=XNMAP  1 W=              ID=BYP AREA E=3 : T 4=     0.9950  X=YCOMPD23 Z=  XM       W=             ID=INLETREC E=1

P 1=YCOMPD41--> HPX(1)  : P 4=YTABLE 4--> DEFF

    --VARY-- ---HI--- ---LO---  (+)   OBJECT = TARGET   (+) LIM
C19= AREA(26)  2817.00  2183.00 1.00  AREA(26) YTABLE 2 0.00 L=1

MODE=YCOMPD 3  PLA=  2355.000  ADDPLA=    0.000  PLA LIMIT= PLA
IDES=0  NVAR=10  MAX ERR# 2=  3.WD+10/WS = 0.00014  MATRX= 0  LOOP= 15
IOMT  LOOPS=  1  MAX ERROR =       0.      = 0.00000

                         B L E E D S   A N D   L E A K A G E S
                         -------------------------------------
      FR - TO %W(FR)  %W(1)      W     T-R      P        H    DH/DHT :       FR - TO %W(FR)  %W(1)      W     T-R      P        H    DH/DHT
B 3=  3 - 12 0.0520 0.0034    2.056 1121.0 131.295  271.29 0.7000 : B 7=  3 - OB 0.0000 0.0000    0.000 1038.8 102.129  250.65 0.6000
B 5=  3 - 17 0.0090 0.0006    0.356  744.8  34.708  178.41 0.2500 : B 9=  3 - OB 0.0321 0.0021    1.269  955.7  77.745  230.01 0.5000
 STA  3 TOTL 0.0931 0.0060    3.681

      FR - TO %W(FR)  %W(1)      W     T-R      P        H    DH/DHT :       FR - TO %W(FR)  %W(1)      W     T-R      P        H    DH/DHT
B 1=  6 -  9 0.0577 0.0034    2.069 1362.8 246.379  333.21 1.0000 : B 6=  6 - 21 0.0000 0.0000    0.000 1362.8 246.379  333.21 1.0000
B 2=  6 - 11 0.0385 0.0023    1.380 1362.8 246.379  399.72 1.0000 : B 8=  6 - OB 0.0038 0.0002    0.136 1362.8 246.379  333.21 1.0000
B 4=  6 - 15 0.0070 0.0004    0.251 1362.8 250.720  333.21 0.2500
 STA  6 TOTL 0.1070 0.0063    3.836

      FR - TO %W(FR)  %W(1)      W     T-R      P        H    DH/DHT
B10= 22 - OB 0.0000 0.0000    0.000  530.6  11.796  126.81 1.0000
 STA 22 TOTL 0.0000 0.0000    0.000

                        C O M P O N E N T   P E R F O R M A N C E
                        -----------------------------------------
  N  ID        BETA       XN       XN-MAP      HP     HPX/PHP  SF(N,2)    W-MAP   EFF-MAP    R-MAP    SMRELL    FLOW ID    EFF ID   MAPTYP
  1 FAN      1.0238  2434.216    92.092   8936.37    44.91    0.0000   901.601   0.8778    1.4135    24.125   QUIETENG  QUIETENG     1
  3 HPC      1.0211 11202.504    97.435  11101.53   100.20    0.0000    81.149   0.8389   19.6152    22.549    0.  0.     0.  0.      1
 10 HPT      0.0000 11202.504   101.578  11200.66   129.89    0.0000     0.999   0.8940    4.0735     6.248   JAN.2690  JAN.2690     1
 14 LPT      0.0000  2434.216    96.891   8981.23     0.00    0.0000     1.001   0.9239    4.8272     6.462   ANALYTIC  ANALYTIC     1
 14 LPT                         RNISF(1,14),(2,14),(3,14),(4,14)=   1.00241  1.00625   1.00000   1.00000

                           N O Z Z L E   P E R F O R M A N C E
                           -----------------------------------
  NOZZLE      (N)  TYP       FG        FN       RJ      CFG      CD     AREA(TH)  V-EXIT  SF(TH,2) SF(EX,2)   CFGT ID    CDT ID   MAPTYP
PRI (8-9)     18    1     1652.38    798.82   1.5181  0.9942  0.9487    294.19   1372.8     0.333    0.000   CFG MDXX  CD  MDXX     1
SEC (18-19)   25    1    17212.24   4822.89   1.7467  0.9952  0.9690   2184.84    970.0     2.532    0.000   CFG MDXX  CD  MDXX     1
                    F I N A L   E N G I N E   P E R F O R M A N C E
                    -----------------------------------------------
 BPR(1) RMIX(1) GAINMX(1) ANGMIX(1)     BPR(2) RMIX(2) GAINMX(2) ANGMIX(2)
14.5149  1.1506  0.0000    0.0000       0.0000  0.0000  0.0000    0.0000

    FG      FRAM    WFE   FARST   EPR    WAENG   WACOR   RCOA    FNR1   FNGF
18864.6 13242.9  2968.4 .06775  1.129  613.248 962.304  27.77    9098. 1.0000

    FN      SFC     WFT     FHV   NODISS   EFFTH    FN/WA  EFFOA   WFTR1  WFTGF
 5621.7  0.5280  2968.4 18550.     0     0.4141   9.1671 0.8509   4955. 1.0000

WARNING: TABLE(S) EXTRAPOLATED.

NPTOT = 48      NP1 = 16      NP2 = 16      NP3 = 16

FMT1
(/,2F10.0,F10.2,2F10.1,3F10.2,/,F10.1,2F10.3,F10.4,2F10.1,        ,       2F10.2
IPUNCH =    412         1       1385       450       1251      1553      827
           1178       734        122       123        530      1267     1257
            797      1148
 NAMES =   CASE       ALT         XM      DTAMB     V-KTAS   YCOMPD15   PAMB
         T-AMB(R)   HPX(3)    BLD(9)    BLD(10)     ERAM      WD(1)    WCOR(1)
            P(1)      T(1)

       10.     20000.      0.67       0.0       411.7      0.00      6.75     447.35
    100.2      0.032     0.000     0.9950       613.2     962.3      9.08     487.61

FMT2
(F10.2,4F10.1,F10.2,F10.4,F10.2,/,8F10.2,)
IPUNCH =    314       651        665      1557       1323      1556      1558
            901       895        888      1174       1167        30        23
           1313      1306
 NAMES =   BPR(1)     FG       F-RAM   YCOMPD19    WFT      YCOMPD18 YCOMPD20
           RC-OA     R(25)     R(18)     T(27)     T(20)   AREA(27) AREA(20)
           WD(27)    WD(20)

    14.51    18864.6    13242.9     5473.2     2968.4    148.46    0.5424     27.77
     1.75       1.52     453.09    1244.18    2184.84    294.19    573.72     38.95

FMT3
(2F10.1,F10.2,4F10.4,F10.1/F10.3,F10.1,6F10.0,)
IPUNCH =   1459      1448       1157       413        416       415       418
            698      1578        274      1554       1554      1554      1554
           1554      1554
 NAMES =   XN(14)    XN(3)      T(10)    CD-18     CFG-19     CD-8      CFG-9
           HP(1)   YCOMPD40  BLDP(9)  YCOMPD16  YCOMPD16  YCOMPD16  YCOMPD16
         YCOMPD16  YCOMPD16

   2434.2    11202.5    2814.68     0.9690     0.9952    0.9487    0.9942    8936.4
    0.995       77.7     99999.     99999.     99999.    99999.    99999.    99999.
```

```
TERMAP (VER 12)  TITLE=  NASA LOW NOISE MODEL (FLOW SCALE DOWN OF MDXX BPR=14 SHORT BYP DUCT MODEL)       DATE= 05-26-92 CASE=  11.0
(CMS  04-06-92) STITLE= 26000 FT, 0.75 MN, MAX CLIMB, RIT=2355 F                                          TIME= 16:15:20 PAGE=    17

   ALT    PAMB   TAMBF  TAMBR  DTAMB DTAMTP PRELHM  KTAS    KCAS    XM     RPR   DEFF    ERAM     P1    T1R   DEFTIP ERAMTP  PTIP  TTIPR
 26000.  5.220 -33.72 425.95    0.0    0.0    0.0  449.6   308.7  0.750  1.446 0.9950 0.9950  7.545 474.00 0.0000 0.0000  0.000    0.0

(N) ID     NSI    T-R       P      W-COR       W        R       EFF      FAR      AREA    XMN      PS     THETA  DELTA     H     SF-N,1  (N)
--- --     ---    ---       -      -----       -        -       ---      ---      ----    ---      --     -----  -----     -     ------  ---
 1 FAN      0    474.0    7.545   990.469  531.949  1.3265   0.8959  0.00000     0.0   0.000    0.000   0.914  0.513  113.25  1.0191    1
 2 DELP     0    518.6   10.009    51.171   34.855  0.9914   0.0000  0.00000   384.3   0.232    9.641   1.000  0.681  123.93  0.2349    2
 3 HPC      0    518.6    9.923    51.631   34.864 22.4015   0.8589  0.00000     0.0   0.000    0.000   1.000  0.675  123.93  1.0241    3
 4 COOL     0   1350.2  222.280     3.373   31.618  0.0000   0.0000  0.00000     0.0   0.000    0.000   2.603 15.125  329.95  0.0000    4
 5 DELP     0   1350.2  222.280     3.373   31.618  1.0000   0.0000  0.00000    23.7   0.253  212.852   2.603 15.125  329.95  0.0000    5
 6 DELP     0   1350.2  222.280     3.373   31.618  0.9772   0.0000  0.00000    20.6   0.295  209.638   2.603 15.125  329.95  0.4000    6
 7 HX C     0   1350.2  217.223     3.082   28.235  1.0000   0.0000  0.00000    26.7   0.203  211.266   2.603 14.781  329.95  0.0000    7
 8 BURN     0   1334.9  217.223     3.065   28.235  0.9813   0.9990  0.00000    26.5   0.203  211.261   2.574 14.781  325.97  0.6799    8
 9 COOL     0   2898.0  213.169     4.721   28.968  0.0000   0.0000  0.02595     0.0   0.000    0.000   5.587 14.505  788.89  0.0000    9
10 HPT      0   2814.4  213.169     5.090   30.792  4.8334   0.8978  0.02438     0.0   0.000    0.000   5.246 14.505  761.70  1.0046   10
11 PWRK     0   2045.2   44.104    20.375   30.792  0.0000   0.0000  0.02438     0.0   0.000    0.000   3.943  3.001  532.47  0.0007   11
12 COOL     0   2029.3   44.104    21.098   32.010  0.0000   0.0000  0.02343     0.0   0.000    0.000   3.912  3.001  527.27  0.0000   12
13 DELP     0   1983.8   44.104    22.041   33.823  0.9970   0.0000  0.02215   196.0   0.200   42.959   3.825  3.001  513.38  0.1163   13
14 LPT      0   1983.8   43.970    22.615   33.822  5.0152   0.9297  0.02215     0.0   0.000    0.000   3.725  2.992  513.39  1.0003   14
15 COOL     0   1378.7    8.767    92.434   33.822  0.0000   0.0000  0.02215     0.0   0.000    0.000   2.658  0.597  344.67  0.0000   15
16 DELP     0   1378.6    8.767    93.032   34.043  0.9927   0.0000  0.02200   406.6   0.441    7.711   2.658  0.597  344.57  0.0609   16
17 COOL     0   1378.6    8.703    93.720   34.043  0.0000   0.0000  0.02200     0.0   0.000    0.000   2.658  0.592  344.57  0.0000   17
18 NOZZ     0   1373.1    8.703    94.395   34.357  1.6673   0.0000  0.02179     1.0   0.000    0.000   2.647  0.592  343.03  0.0000   18
19  TH8     0   1203.4    5.220   147.341   34.357  1.6673   0.0000  0.02179   294.2   0.899    5.220   2.320  0.355  297.90  1.0000   19
20  EX9     0   1203.4    5.220   147.341   34.357  1.0000   0.0000  0.02179   294.2   0.899    5.220   2.320  0.355  297.90  0.0000   20
--- --     ---    ---       -      -----       -        -       ---      ---      ----    ---      --     -----  -----     -     ------  ---
21 COOL     0    518.6   10.009   729.800  497.094  0.0000   0.0000  0.00000     0.0   0.000    0.000   1.000  0.681  123.93  0.0000   21
22 DELP     0    518.6   10.009   729.800  497.094  0.9963   0.0000  0.00000  3500.0   0.384    9.043   1.000  0.681  123.93  0.0378   22
23 HX H     0    518.6    9.972   732.476  497.094  1.0000   0.0185  0.00000  3500.0   0.385    9.002   1.000  0.679  123.93  0.0000   23
24 DELP     0    519.5    9.972   733.143  497.094  1.0000   0.0000  0.00000  3500.0   0.386    9.000   1.002  0.679  124.15  0.0000   24
25 NOZZ     0    519.5    9.972   733.143  497.094  1.9105   0.0000  0.00000     1.0   0.000    0.000   1.002  0.679  124.15  0.0000   25
26 TH18     0    432.7    5.265  1267.240  497.094  1.8939   0.0000  0.00000  2185.2   1.000    5.265   0.834  0.358  103.37  1.0000   26
27 EX19     0    432.7    5.265  1267.240  497.094  1.0088   0.0000  0.00000  2185.2   1.000    5.220   0.834  0.358  103.37  0.0000   27
--- --     ---    ---       -      -----       -        -       ---      ---      ----    ---      --     -----  -----     -     ------  ---

S 1= RC-OA  =    29.4596 : S 2=EMAP(7) =  -15.3419 : S 3= EFF(23)=     0.0185

Y 1=      0.9000= COMP POLY EFF AT STATION  1                        : Y16=99999.0000=         0.000000 -            0.000000 +99999.0000
Y 2=      0.9059= COMP POLY EFF AT STATION  3                        : Y17=     4.7076=          P(25)   -   PS(26)             +    0.0000
Y 3= 2354.7439=            T(10)   -        459.669922 +    0.0000  : Y18=  138.5909=         YCOMPD17 *          29.440002 +    0.0000
Y 4=   229.2297=           H(10)   -    H(11)          +    0.0000  : Y19= 4703.2461=           FN     - YCOMPD18           +    0.0000
Y 5=    43.6986=         YCOMPD 4 / THETA 10           +    0.0000  : Y20=     0.5609=          WFE     / YCOMPD19           +    0.0000
Y 6=   168.7209=           H(14)   -    H(15)          +    0.0000  : Y21=    21.7714=          T(1)    **          0.500000 +    0.0000
Y 7=    45.2908=         YCOMPD 6 / THETA 14           +    0.0000  : Y22=     2.8854=         YCOMPD21 /    P(1)              +    0.0000
Y 8=     1.6379=          RNI(14) /          0.379900 +    0.0000  : Y23= 1534.9089=         YCOMPD22 *    WD(1)             +   -0.0000
Y 9= 4140.9023=          XNMAP 14 *        42.203995 +    0.0000  : Y39=     0.6787=          V-19    /    V-9               +    0.0000
Y10=     1.9301=         THETA 14 **         0.500000 +    0.0000  : Y40=     0.9950=         0.000000 -            0.000000 +    0.9950
Y11= 7992.3477=          YCOMPD 9 * YCOMPD10          +    0.0000  : Y41=    40.3690=          HP(14)  *            0.005000 +    0.0000
Y12=    10.0260=           FAR(9)  -          0.000000 +   10.0000  : Y42=     0.9451=          T(24)   -    T(23)             +    0.0000
Y15=     0.0000=         0.000000 -          0.000000 +    0.0000  : Y43=11066.3047=          XN(1)   *            4.490000 +    0.0000

T 1=  375.0002  X=YCOMPD15 Z=           W=           ID=03/11/91 E=2 : T 3=     0.4143  X=RMAP(14) Z=XNMAP 14 W=           ID=LPT X MN E=1
T 2= 2184.6997  X=  XM      Z=XNMAP  1 W=           ID=BYP AREA E=3 : T 4=     0.9950  X=YCOMPD23 Z=  XM      W=           ID=INLETREC E=1

P 1=YCOMPD41--> HPX(1)  : P 4=YTABLE 4--> DEFF

     --VARY-- ---HI--- ---LO---  (+)   OBJECT = TARGET   (+) LIM
C19= AREA(26)  2817.00  2183.00 1.00  AREA(26) YTABLE 2 0.00 L=1

MODE=YCOMPD 3  PLA=  2355.000  ADDPLA=     0.000  PLA LIMIT= PLA
IDES=0  NVAR=10  MAX ERR# 1= 19.CONSTR.  = 0.00023  MATRX= 0  LOOP= 14
IOMT  LOOPS=  1  MAX ERROR =       0.     = 0.00000

                       B L E E D S    A N D    L E A K A G E S
                       ---------------------------------------
      FR - TO %W(FR)  %W(1)      W     T-R      P        H    DH/DHT :       FR - TO %W(FR)  %W(1)      W     T-R      P        H    DH/DHT
B 3=   3 - 12 0.0520 0.0034   1.813 1108.6 115.052  268.14 0.7000 : B 7=   3 - OB 0.0000 0.0000   0.000 1026.3  89.260  247.54 0.6000
B 5=   3 - 17 0.0090 0.0006   0.314  732.5  29.914  175.43 0.2500 : B 9=   3 - OB 0.0321 0.0021   1.119  943.3  67.739  226.94 0.5000
 STA   3 TOTL 0.0931 0.0061   3.246

      FR - TO %W(FR)  %W(1)      W     T-R      P        H    DH/DHT :       FR - TO %W(FR)  %W(1)      W     T-R      P        H    DH/DHT
B 1=   6 -  9 0.0577 0.0034   1.824 1350.2 217.223  329.95 1.0000 : B 6=   6 - 21 0.0000 0.0000   0.000 1350.2 217.223  329.95 1.0000
B 2=   6 - 11 0.0385 0.0023   1.217 1350.2 217.223  395.87 1.0000 : B 8=   6 - OB 0.0038 0.0002   0.120 1350.2 217.223  329.95 1.0000
B 4=   6 - 15 0.0070 0.0004   0.221 1350.2 221.016  329.95 0.2500
 STA   6 TOTL 0.1070 0.0064   3.383

      FR - TO %W(FR)  %W(1)      W     T-R      P        H    DH/DHT
B10=  22 - OB 0.0000 0.0000   0.000  518.6   9.972  123.93 1.0000
 STA  22 TOTL 0.0000 0.0000   0.000

                     C O M P O N E N T    P E R F O R M A N C E
                     -------------------------------------------
  N  ID         BETA      XN        XN-MAP     HP      HPX/PHP  SF(N,2)    W-MAP  EFF-MAP    R-MAP    SMRELL    FLOW ID     EFF ID   MAPTYP
  1 FAN       1.0312  2464.656     94.573   8034.87    40.37   0.0000   927.989   0.8792   1.4447    22.347  QUIETENG   QUIETENG      1
  3 HPC       1.0164 11152.133     98.116   9772.56   100.20   0.0000    83.722   0.8387  20.4571    21.958   0.  0.      0.  0.       1
 10 HPT       0.0000 11152.133    101.129   9873.24   113.52   0.0000     1.000   0.8937   4.0708     6.235  JAN.2690   JAN.2690      1
 14 LPT       0.0000  2464.656     98.116   8073.80     0.00   0.0000     1.000   0.9242   5.0152     6.497  ANALYTIC   ANALYTIC      1
 14 LPT                         RNISF(1,14),(2,14),(3,14),(4,14)=    1.00223  1.00560  1.00000   1.00000

                        N O Z Z L E    P E R F O R M A N C E
                        -------------------------------------
  NOZZLE      (N)  TYP      FG        FN        RJ      CFG      CD      AREA(TH)  V-EXIT  SF(TH,2) SF(EX,2)   CFGT ID     CDT ID   MAPTYP
PRI (8-9)     18    1    1596.90    774.75   1.6673  0.9948  0.9561     294.19   1503.2     0.302    0.000   CFG MDXX   CD  MDXX      1
SEC (18-19)   25    1   15792.54   4067.09   1.9105  0.9957  0.9777    2185.20   1020.2     2.303    0.000   CFG MDXX   CD  MDXX      1
                   F I N A L    E N G I N E    P E R F O R M A N C E
                   -------------------------------------------------
  BPR(1) RMIX(1) GAINMX(1) ANGMIX(1)      BPR(2) RMIX(2) GAINMX(2) ANGMIX(2)
 14.2619  1.1459  0.0000     0.0000       0.0000  0.0000  0.0000    0.0000

    FG      FRAM     WFE    FARST   EPR     WAENG    WACOR    RCOA     FNR1   FNGF
 17389.4 12547.6  2638.1 .06775  1.153  531.949  990.469  29.46    9431. 1.0000

    FN      SFC      WFT     FHV   NODISS   EFFTH     FN/WA  EFFOA    WFTR1  WFTGF
  4841.8  0.5449  2638.1 18550.     0     0.4240    9.1021 0.8504    5375. 1.0000

WARNING: TABLE(S) EXTRAPOLATED.

NPTOT = 48     NP1 = 16     NP2 = 16     NP3 = 16

FMT1
(/,2F10.0,F10.2,2F10.1,3F10.2,/,F10.1,2F10.3,F10.4,2F10.1,     ,        2F10.2
IPUNCH =    412         1      1385      450      1251      1553      827
           1178       734       122      123       530      1287     1257
            797      1148
 NAMES =  CASE       ALT       XM       DTAMB     V-KTAS   YCOMPD15   PAMB
         T-AMB(R)   HPX(3)   BLD(9)    BLD(10)    ERAM       WD(1)   WCOR(1)
           P(1)      T(1)


      11.      26000.      0.75       0.0      449.6      0.00      5.22     425.95
    100.2       0.032     0.000    0.9950      531.9     990.5      7.55     474.00


FMT2
(F10.2,4F10.1,F10.2,F10.4,F10.2,/,8F10.2,)
IPUNCH =    314       651       665     1557      1323      1556     1558
            901       895       888     1174      1167        30       23
           1313      1306
 NAMES =  BPR(1)      FG      F-RAM   YCOMPD19    WFT     YCOMPD18 YCOMPD20
          RC-OA      R(25)    R(18)     T(27)     T(20)   AREA(27) AREA(20)
          WD(27)    WD(20)

    14.26    17389.4    12547.6    4703.2    2638.1     138.59    0.5609     29.46
     1.91       1.67     432.72   1203.37   2185.20     294.19    497.09     34.36

FMT3
(2F10.1,F10.2,4F10.4,F10.1/F10.3,F10.1,6F10.0,)
IPUNCH =   1459      1448      1157      413       416       415      418
            698      1578       274     1554      1554      1554     1554
           1554      1554
 NAMES =  XN(14)    XN(3)      T(10)    CD-18    CFG-19     CD-8      CFG-9
          HP(1)   YCOMPD40  BLDP(9)  YCOMPD16  YCOMPD16  YCOMPD16  YCOMPD16
       YCOMPD16  YCOMPD16

   2464.7    11152.1    2814.41     0.9777     0.9957     0.9561     0.9948     8034.9
    0.995       67.7     99999.     99999.     99999.     99999.     99999.     99999.
```

```
[illegible] (VER 12)  TITLE=  NASA LOW NOISE MODEL (FLOW SCALE DOWN OF MDXX BPR=14 SHORT BYP DUCT MODEL)        DATE= 05-26-92 CASE=   12.0
(CMS  04-06-92) STITLE= 30000 FT, 0.75 MN, MAX CLIMB, RIT=2355 F                                         TIME= 16:15:20 PAGE=     18

  ALT    PAMB   TAMBF  TAMBR   DTAMB DTAMTP PRELHM  KTAS    KCAS    XM      RPR   DEFF   ERAM     P1    T1R    DEFTIP ERAMTP  PTIP  TTIPR
30000.  4.364 -47.99 411.68    0.0     0.0    0.0  442.1   283.5  0.750  1.446 0.9950 0.9950  6.309 458.13 0.0000 0.0000  0.000   0.0

(N) ID    NSI    T-R       P      W-COR      W        R        EFF       FAR      AREA    XMN      PS     THETA  DELTA     H    SF-N,1  (N)
--- --    ---    ---       -      -----      -        -        ---       ---      ----    ---      --     -----  -----     -    ------  ---
 1 FAN     0    458.1    6.309 1011.055  461.822  1.3528   0.8943   0.00000     0.0   0.000    0.000   0.883  0.429  109.45  1.0191    1
 2 DELP    0    504.4    8.535   53.008   31.217  0.9907   0.0000   0.00000-  384.3   0.241    8.197   0.972  0.581  120.53  0.2349    2
 3 HPC     0    504.4    8.456   53.513   31.222 23.5305   0.8577   0.00000     0.0   0.000    0.000   0.972  0.575  120.53  1.0241    3
 4 COOL    0   1335.9  198.964    3.357   28.315  0.0000   0.0000   0.00000     0.0   0.000    0.000   2.576 13.539  326.24  0.0000    4
 5 DELP    0   1335.9  198.964    3.357   28.315  1.0000   0.0000   0.00000    23.7   0.252  190.611   2.576 13.539  326.24  0.0000    5
 6 DELP    0   1335.9  198.964    3.357   28.315  0.9775   0.0000   0.00000    20.6   0.293  187.765   2.576 13.539  326.24  0.4000    6
 7 HX C    0   1335.9  194.484    3.066   25.285  1.0000   0.0000   0.00000    26.7   0.202  189.207   2.576 13.234  326.24  0.0000    7
 8 BURN    0   1320.6  194.484    3.049   25.285  0.9815   0.9990   0.00000    26.5   0.202  189.203   2.546 13.234  322.27  0.6799    8
 9 COOL    0   2898.6  190.893    4.722   25.947  0.0000   0.0000   0.02618     0.0   0.000    0.000   5.589 12.989  789.32  0.0000    9
10 HPT     0   2814.3  190.893    5.091   27.582  4.8304   0.8974   0.02460     0.0   0.000    0.000   5.245 12.989  761.89  1.0046   10
11 PWRK    0   2046.0   39.520   20.371   27.582  0.0000   0.0000   0.02460     0.0   0.000    0.000   3.945  2.689  532.81  0.0007   11
12 COOL    0   2029.4   39.520   21.091   28.672  0.0000   0.0000   0.02364     0.0   0.000    0.000   3.913  2.689  527.44  0.0000   12
13 DELP    0   1983.3   39.520   22.030   30.296  0.9970   0.0000   0.02234   196.0   0.200   38.494   3.824  2.689  513.35  0.1163   13
14 LPT     0   1983.3   39.400   22.605   30.296  5.0857   0.9292   0.02234     0.0   0.000    0.000   3.724  2.681  513.35  1.0003   14
15 COOL    0   1374.5    7.747   93.553   30.296  0.0000   0.0000   0.02234     0.0   0.000    0.000   2.650  0.527  343.57  0.0000   15
16 DELP    0   1374.2    7.747   94.157   30.494  0.9925   0.0000   0.02220   406.6   0.448    6.787   2.650  0.527  343.46  0.0609   16
17 COOL    0   1374.2    7.689   94.873   30.494  0.0000   0.0000   0.02220     0.0   0.000    0.000   2.650  0.523  343.46  0.0000   17
18 NOZZ    0   1368.6    7.689   95.553   30.775  1.7618   0.0000   0.02199     1.0   0.000    0.000   2.639  0.523  341.90  0.0000   18
19  TH8    0   1182.3    4.364  156.471   30.775  1.7618   0.0000   0.02199   294.2   0.949    4.364   2.280  0.297  292.42  1.0000   19
20  EX9    0   1182.3    4.364  156.471   30.775  1.0000   0.0000   0.02199   294.2   0.949    4.364   2.280  0.297  292.42  0.0000   20
--- --    ---    ---       -      -----      -        -        ---       ---      ----    ---      --     -----  -----     -    ------  ---
21 COOL    0    504.4    8.535  731.185  430.605  0.0000   0.0000   0.00000     0.0   0.000    0.000   0.972  0.581  120.53  0.0000   21
22 DELP    0    504.4    8.535  731.185  430.605  0.9963   0.0000   0.00000  3500.0   0.384    7.707   0.972  0.581  120.53  0.0378   22
23 HX H    0    504.4    8.504  733.877  430.605  1.0000   0.0185   0.00000  3500.0   0.386    7.672   0.972  0.579  120.53  0.0000   23
24 DELP    0    505.4    8.504  734.586  430.605  1.0000   0.0000   0.00000  3500.0   0.387    7.670   0.974  0.579  120.77  0.0000   24
25 NOZZ    0    505.4    8.504  734.586  430.605  1.9485   0.0000   0.00000     1.0   0.000    0.000   0.974  0.579  120.77  0.0000   25
26 TH18    0    420.9    4.489 1269.939  430.605  1.8943   0.0000   0.00000  2184.8   1.000    4.489   0.812  0.305  100.55  1.0000   26
27 EX19    0    420.9    4.489 1269.939  430.605  1.0286   0.0000   0.00000  2184.8   1.000    4.364   0.812  0.305  100.55  0.0000   27
--- --    ---    ---       -      -----      -        -        ---       ---      ----    ---      --     -----  -----     -    ------  ---

S 1= RC-OA  =    31.5371 : S 2=EMAP(7) =  -15.3411 : S 3= EFF(23)=     0.0185

Y 1=     0.8987= COMP POLY EFF AT STATION  1                       : Y16=99999.0000=          0.000000 -             0.000000 +99999.0000
Y 2=     0.9057= COMP POLY EFF AT STATION  3                       : Y17=     4.0145=           P(25)   -   PS(26)            +     0.0000
Y 3= 2354.6589=           T(10)   -         459.669922 +    0.0000 : Y18=   118.1865=         YCOMPD17 *          29.440002 +     0.0000
Y 4=  229.0801=           H(10)   -    H(11)           +    0.0000 : Y19= 4348.8633=            FN     - YCOMPD18            +     0.0000
Y 5=   43.6733=         YCOMPD 4 / THETA 10            +    0.0000 : Y20=     0.5481=           WFE    / YCOMPD19            +     0.0000
Y 6=  169.7764=           H(14)   -    H(15)           +    0.0000 : Y21=    21.4040=           T(1)   **           0.500000 +     0.0000
Y 7=   45.5875=         YCOMPD 6 / THETA 14            +    0.0000 : Y22=     3.3927=         YCOMPD21 /    P(1)             +     0.0000
Y 8=    1.4681=           RNI(14) /           0.379900 +    0.0000 : Y23= 1566.8130=         YCOMPD22 *   WD(1)             +    -0.0000
Y 9= 4171.6367=          XNMAP 14 *          42.203995 +    0.0000 : Y39=     0.6393=           V-19   /    V-9              +     0.0000
Y10=    1.9298=          THETA 14 **          0.500000 +    0.0000 : Y40=     0.9950=         0.000000 -            0.000000 +     0.9950
Y11= 8050.4922=         YCOMPD 9 * YCOMPD10            +    0.0000 : Y41=    36.3869=           HP(14)  *           0.005000 +     0.0000
Y12=   10.0262=           FAR(9)  -           0.000000 +   10.0000 : Y42=     0.9753=           T(24)  -    T(23)           +     0.0000
Y15=    0.0000=         0.000000 -            0.000000 +    0.0000 : Y43=11146.8047=           XN(1)  *            4.490000 +     0.0000

T 1=  375.0002  X=YCOMPD15 Z=           W=          ID=03/11/91 E=2 : T 3=     0.4227  X=RMAP(14) Z=XNMAP 14 W=          ID=LPT X MN E=1
T 2= 2184.6997  X=  XM      Z=XNMAP  1 W=          ID=BYP AREA E=3 : T 4=     0.9950  X=YCOMPD23 Z=  XM     W=          ID=INLETREC E=1

P 1=YCOMPD41--> HPX(1)  : P 4=YTABLE 4--> DEFF

    --VARY-- ---HI--- ---LO---  (+)   OBJECT = TARGET   (+) LIM
C19= AREA(26)  2817.00  2183.00 1.00  AREA(26) YTABLE 2 0.00 L=1

MODE=YCOMPD 3  PLA=  2355.000  ADDPLA=     0.000  PLA LIMIT= PLA
IDES=0  NVAR=10  MAX ERR#10=  0. PLA+ADD = 0.00014  MATRX= 0  LOOP= 15
IOMT  LOOPS=  1  MAX ERROR =      0.       = 0.00000

                        B L E E D S    A N D    L E A K A G E S
                        ---------------------------------------
      FR - TO %W(FR)  %W(1)      W     T-R      P        H     DH/DHT :        FR - TO %W(FR)  %W(1)       W     T-R      P        H    DH/DHT
B 3=   3 - 12 0.0520 0.0035    1.624 1094.2 102.311   264.53 0.7000 : B 7=   3 - OB 0.0000 0.0000    0.000 1012.0  79.141   243.96 0.6000
B 5=   3 - 17 0.0090 0.0006    0.281  718.2  26.100   171.96 0.2500 : B 9=   3 - OB 0.0321 0.0022    1.002  928.9  59.849   223.39 0.5000
 STA   3 TOTL 0.0931 0.0063    2.907

      FR - TO %W(FR)  %W(1)      W     T-R      P        H     DH/DHT :        FR - TO %W(FR)  %W(1)       W     T-R      P        H    DH/DHT
B 1=   6 -  9 0.0577 0.0035    1.634 1335.9 194.484   326.24 1.0000 : B 6=   6 - 21 0.0000 0.0000    0.000 1335.9 194.484   326.24 1.0000
B 2=   6 - 11 0.0385 0.0024    1.090 1335.9 194.484   391.51 1.0000 : B 8=   6 - OB 0.0038 0.0002    0.108 1335.9 194.484   326.24 1.0000
B 4=   6 - 15 0.0070 0.0004    0.198 1335.9 197.844   326.24 0.2500
 STA   6 TOTL 0.1070 0.0066    3.030

      FR - TO %W(FR)  %W(1)      W     T-R      P        H     DH/DHT
B10=  22 - OB 0.0000 0.0000    0.000  504.4   8.504   120.53 1.0000
 STA  22 TOTL 0.0000 0.0000    0.000

                       C O M P O N E N T     P E R F O R M A N C E
                       -------------------------------------------
  N  ID        BETA        XN       XN-MAP       HP     HPX/PHP  SF(N,2)    W-MAP  EFF-MAP    R-MAP   SMRELL   FLOW ID     EFF ID  MAPTYP
  1 FAN       1.0133  2482.585     96.896    7241.89    36.39    0.0000   947.277   0.8776   1.4805   21.821  QUIETENG   QUIETENG     1
  3 HPC       1.0097 11097.066     98.992    8737.98   100.20    0.0000    86.773   0.8375  21.4835   21.194    0.  0.      0.  0.      1
 10 HPT       0.0000 11097.066    100.633    8839.10   100.66    0.0000     1.000   0.8933   4.0684    6.220  JAN.2690   JAN.2690     1
 14 LPT       0.0000  2482.585     98.845    7277.39     0.00    0.0000     1.000   0.9244   5.0857    6.517  ANALYTIC   ANALYTIC     1
 14 LPT                          RNISF(1,14),(2,14),(3,14),(4,14)=  1.00202  1.00488  1.00000  1.00000

                          N O Z Z L E     P E R F O R M A N C E
                          -------------------------------------
  NOZZLE       (N)  TYP      FG         FN        RJ      CFG       CD     AREA(TH)  V-EXIT  SF(TH,2) SF(EX,2)   CFGT ID    CDT ID  MAPTYP
PRI (8-9)      18    1     1498.28     774.37   1.7618  0.9952  0.9612     294.19   1573.9     0.275    0.000   CFG MDXX  CD  MDXX     1
SEC (18-19)    25    1    13678.27    3692.68   1.9485  0.9959  0.9798    2184.80   1006.2     2.091    0.000   CFG MDXX  CD  MDXX     1
                     F I N A L     E N G I N E     P E R F O R M A N C E
                     -----------------------------------------------------
  BPR(1) RMIX(1) GAINMX(1) ANGMIX(1)      BPR(2) RMIX(2) GAINMX(2) ANGMIX(2)
 13.7939  1.1060  0.0000     0.0000       0.0000  0.0000  0.0000     0.0000

    FG      FRAM     WFE   FARST   EPR     WAENG    WACOR   RCOA     FNR1   FNGF
 15176.5 10709.5  2383.5 .06775  1.219  461.822 1011.055  31.54   10406. 1.0000

    FN      SFC      WFT    FHV   NODISS   EFFTH    FN/WA  EFFOA    WFTR1  WFTGF
 4467.1  0.5336  2383.5 18550.     0     0.4149   9.6727 0.8484    5908. 1.0000

WARNING: TABLE(S) EXTRAPOLATED.

NPTOT = 48      NP1 = 16      NP2 = 16      NP3 = 16

FMT1
(/,2F10.0,F10.2,2F10.1,3F10.2,/,F10.1,2F10.3,F10.4,2F10.1,        ,          2F10.2
IPUNCH =    412          1       1385       450      1251      1553       827
           1178        734        122       123       530      1287      1257
            797       1148
 NAMES =  CASE       ALT         XM       DTAMB     V-KTAS   YCOMPD15   PAMB
        T-AMB(R)   HPX(3)   BLD(9)    BLD(10)    ERAM      WD(1)   WCOR(1)
          P(1)       T(1)


      12.      30000.       0.75        0.0       442.1       0.00       4.36     411.68
    100.2       0.032      0.000     0.9950       461.8     1011.1       6.31     458.13


FMT2
(F10.2,4F10.1,F10.2,F10.4,F10.2,/,8F10.2,)
IPUNCH =    314        651        665      1557      1323      1556      1558
            901        895        888      1174      1167        30        23
           1313       1306
 NAMES =  BPR(1)      FG        F-RAM   YCOMPD19    WFT     YCOMPD18 YCOMPD20
          RC-OA      R(25)     R(18)     T(27)     T(20)   AREA(27) AREA(20)
          WD(27)     WD(20)

    13.79     15176.5    10709.5     4348.9     2383.5     118.19    0.5481     31.54
     1.95        1.76     420.94    1182.33    2184.80     294.19    430.60     30.78

FMT3
(2F10.1,F10.2,4F10.4,F10.1/F10.3,F10.1,6F10.0,)
IPUNCH =   1459       1448       1157       413       416       415       418
            698       1578        274      1554      1554      1554      1554
           1554       1554
 NAMES =  XN(14)     XN(3)      T(10)    CD-18     CFG-19    CD-8      CFG-9
          HP(1)    YCOMPD40  BLDP(9)  YCOMPD16  YCOMPD16  YCOMPD16  YCOMPD16
        YCOMPD16  YCOMPD16

   2482.6     11097.1    2814.33     0.9798     0.9959     0.9612    0.9952    7241.9
    0.995        59.8     99999.     99999.     99999.     99999.    99999.    99999.
```

```
TERMAP (VER 12)  TITLE=  NASA LOW NOISE MODEL (FLOW SCALE DOWN OF MDXX BPR=14 SHORT BYP DUCT MODEL)       DATE= 05-26-92 CASE=   13.0
(CMS  04-06-92) STITLE= 33000 FT, 0.75 MN, MAX CLIMB, RIT=2355 F                                          TIME= 16:15:20 PAGE=     19

   ALT    PAMB   TAMBF  TAMBR   DTAMB DTAMTP PRELHM  KTAS    KCAS     XM     RPR   DEFF    ERAM     P1     T1R   DEFTIP ERAMTP  PTIP  TTIPR
 33000.  3.800 -58.68 400.99    0.0     0.0    0.0  436.3   265.3  0.750  1.446 0.9950 0.9950  5.494 446.23 0.0000 0.0000  0.000   0.0

(N) ID     NSI    T-R        P       W-COR        W        R        EFF       FAR       AREA    XMN      PS     THETA  DELTA     H      SF-N,1   (N)
--- --     ---    ---        -       -----        -        -        ---       ---       ----    ---      --     -----  -----     -      ------   ---
 1 FAN      0    446.2     5.494  1027.086   413.939   1.3735   0.8929   0.00000      0.0  0.000     0.000   0.860   0.374   106.60  1.0191     1
 2 DELP     0    493.7     7.545    54.393    28.624   0.9902   0.0000   0.00000    384.3  0.248     7.230   0.952   0.513   117.98  0.2349     2
 3 HPC      0    493.7     7.471    54.959    28.638  24.4181   0.8559   0.00000      0.0  0.000     0.000   0.952   0.508   117.98  1.0241     3
 4 COOL     0   1325.2   182.440     3.344    25.972   0.0000   0.0000   0.00000      0.0  0.000     0.000   2.555  12.414   323.46  0.0000     4
 5 DELP     0   1325.2   182.440     3.344    25.972   1.0000   0.0000   0.00000     23.7  0.251   174.841   2.555  12.414   323.46  0.0000     5
 6 DELP     0   1325.2   182.440     3.344    25.972   0.9777   0.0000   0.00000     20.6  0.292   172.253   2.555  12.414   323.46  0.4000     6
 7 HX C     0   1325.2   178.365     3.054    23.193   1.0000   0.0000   0.00000     26.7  0.201   173.564   2.555  12.137   323.46  0.0000     7
 8 BURN     0   1309.8   178.365     3.037    23.193   0.9817   0.9990   0.00000     26.5  0.201   173.561   2.525  12.137   319.49  0.6799     8
 9 COOL     0   2899.5   175.099     4.724    23.804   0.0000   0.0000   0.02637      0.0  0.000     0.000   5.590  11.915   789.77  0.0000     9
10 HPT      0   2814.6   175.099     5.092    25.303   4.8272   0.8972   0.02477      0.0  0.000     0.000   5.246  11.915   762.15  1.0046    10
11 PWRK     0   2046.8    36.273    20.365    25.303   0.0000   0.0000   0.02477      0.0  0.000     0.000   3.946   2.468   533.17  0.0007    11
12 COOL     0   2029.9    36.273    21.082    26.303   0.0000   0.0000   0.02380      0.0  0.000     0.000   3.914   2.468   527.66  0.0000    12
13 DELP     0   1983.2    36.273    22.017    27.792   0.9970   0.0000   0.02250    196.0  0.200    35.334   3.824   2.468   513.42  0.1163    13
14 LPT      0   1983.2    36.164    22.591    27.791   5.1259   0.9285   0.02250      0.0  0.000     0.000   3.724   2.461   513.42  1.0003    14
15 COOL     0   1372.5     7.055    94.169    27.791   0.0000   0.0000   0.02250      0.0  0.000     0.000   2.646   0.480   343.10  0.0000    15
16 DELP     0   1372.2     7.055    94.775    27.973   0.9923   0.0000   0.02235    406.6  0.452     6.167   2.646   0.480   342.97  0.0609    16
17 COOL     0   1372.2     7.001    95.507    27.973   0.0000   0.0000   0.02235      0.0  0.000     0.000   2.646   0.476   342.97  0.0000    17
18 NOZZ     0   1366.6     7.001    96.189    28.230   1.8424   0.0000   0.02214      1.0  0.000     0.000   2.635   0.476   341.39  0.0000    18
19  TH8     0   1166.8     3.800   163.751    28.230   1.8424   0.0000   0.02214    294.2  0.988     3.800   2.250   0.259   288.40  1.0000    19
20  EX9     0   1166.8     3.800   163.751    28.230   1.0000   0.0000   0.02214    294.2  0.988     3.800   2.250   0.259   288.40  0.0000    20
--- --     ---    ---        -       -----        -        -        ---       ---       ----    ---      --     -----  -----     -      ------   ---
21 COOL     0    493.7     7.545   732.206   385.316   0.0000   0.0000   0.00000      0.0  0.000     0.000   0.952   0.513   117.98  0.0000    21
22 DELP     0    493.7     7.545   732.206   385.316   0.9963   0.0000   0.00000   3500.0  0.385     6.812   0.952   0.513   117.98  0.0378    22
23 HX H     0    493.7     7.518   734.911   385.316   1.0000   0.0185   0.00000   3500.0  0.387     6.780   0.952   0.512   117.98  0.0000    23
24 DELP     0    494.7     7.518   735.653   385.316   1.0000   0.0000   0.00000   3500.0  0.387     6.779   0.954   0.512   118.22  0.0000    24
25 NOZZ     0    494.7     7.518   735.653   385.316   1.9783   0.0000   0.00000      1.0  0.000     0.000   0.954   0.512   118.22  0.0000    25
26 TH18     0    412.1     3.968  1271.908   385.316   1.8945   0.0000   0.00000   2185.2  1.000     3.968   0.794   0.270    98.42  1.0000    26
27 EX19     0    412.1     3.968  1271.908   385.316   1.0443   0.0000   0.00000   2185.2  1.000     3.800   0.794   0.270    98.42  0.0000    27
--- --     ---    ---        -       -----        -        -        ---       ---       ----    ---      --     -----  -----     -      ------   ---

S 1= RC-OA  =    33.2089 : S 2=EMAP(7) =  -15.3409 : S 3= EFF(23)=     0.0185

Y 1=     0.8976= COMP POLY EFF AT STATION  1                      : Y16=99999.0000=          0.000000 -                 0.000000 +99999.0000
Y 2=     0.9049= COMP POLY EFF AT STATION  3                      : Y17=     3.5497=           P(25)   -   PS(26)               +      0.0000
Y 3= 2354.9526=           T(10)   -          459.669922 +   0.0000 : Y18=   104.5027=         YCOMPD17 *             29.440002 +      0.0000
Y 4=   228.9795=          H(10)   -    H(11)            +   0.0000 : Y19=  4079.2280=           FN     -  YCOMPD18              +      0.0000
Y 5=    43.6515=        YCOMPD 4 / THETA 10             +   0.0000 : Y20=     0.5396=          WFE     /  YCOMPD19              +      0.0000
Y 6=   170.3232=          H(14)   -    H(15)            +   0.0000 : Y21=    21.1241=           T(1)   **             0.500000 +      0.0000
Y 7=    45.7374=        YCOMPD 6 / THETA 14             +   0.0000 : Y22=     3.8451=         YCOMPD21 /     P(1)               +      0.0000
Y 8=     1.3475=         RNI(14) /            0.379900 +   0.0000 : Y23=  1591.6560=         YCOMPD22 *    WD(1)               +     -0.0000
Y 9= 4203.2969=         XNMAP 14 *           42.203995 +   0.0000 : Y39=     0.6112=           V-19   /    V-9                 +      0.0000
Y10=     1.9298=         THETA 14 **           0.500000 +   0.0000 : Y40=     0.9950=         0.000000 -             0.000000 +      0.9950
Y11= 8111.3164=         YCOMPD 9 * YCOMPD10             +   0.0000 : Y41=    33.4856=          HP(14)  *             0.005000 +      0.0000
Y12=    10.0264=          FAR(9)  -            0.000000 +  10.0000 : Y42=     0.9985=           T(24)  -     T(23)               +      0.0000
Y15=     0.0000=        0.000000 -            0.000000 +   0.0000 : Y43=11231.0234=           XN(1)  *              4.490000 +      0.0000

T 1=  375.0002  X=YCOMPD15 Z=          W=           ID=03/11/91 E=2 : T 3=      0.4271  X=RMAP(14) Z=XNMAP  14 W=          ID=LPT X MN E=1
T 2= 2184.6997  X=  XM       Z=XNMAP   1 W=           ID=BYP AREA E=3 : T 4=      0.9950  X=YCOMPD23 Z=  XM       W=          ID=INLETREC E=1

P 1=YCOMPD41--> HPX(1)   : P 4=YTABLE 4--> DEFF

     --VARY-- ---HI--- ---LO---  (+)   OBJECT = TARGET    (+) LIM
C19= AREA(26)  2817.00  2183.00 1.00  AREA(26) YTABLE 2 0.00 L=1

MODE=YCOMPD 3  PLA=  2355.000  ADDPLA=     0.000  PLA LIMIT= PLA
IDES=0  NVAR=10  MAX ERR# 2=   3.WD+10/WS = 0.00036  MATRX= 0  LOOP= 14
IOMT  LOOPS=  1  MAX ERROR =       0.      = 0.00000

                          B L E E D S    A N D    L E A K A G E S
                          ---------------------------------------
        FR - TO %W(FR)  %W(1)       W     T-R       P        H    DH/DHT :       FR - TO %W(FR)  %W(1)       W     T-R       P        H    DH/DHT
B 3=   3 - 12 0.0520 0.0036     1.489 1083.4   93.369  261.81 0.7000 : B 7=   3 - OB 0.0000 0.0000     0.000 1001.1   72.068  241.27 0.6000
B 5=   3 - 17 0.0090 0.0006     0.258  707.4   23.482  169.35 0.2500 : B 9=   3 - OB 0.0321 0.0022     0.919  918.1   54.358  220.72 0.5000
 STA   3 TOTL 0.0931 0.0064     2.666

        FR - TO %W(FR)  %W(1)       W     T-R       P        H    DH/DHT :       FR - TO %W(FR)  %W(1)       W     T-R       P        H    DH/DHT
B 1=   6 -  9 0.0577 0.0036     1.499 1325.2 178.365  323.46 1.0000 : B 6=   6 - 21 0.0000 0.0000     0.000 1325.2 178.365  323.46 1.0000
B 2=   6 - 11 0.0385 0.0024     1.000 1325.2 178.365  388.30 1.0000 : B 8=   6 - OB 0.0038 0.0002     0.099 1325.2 178.365  323.46 1.0000
B 4=   6 - 15 0.0070 0.0004     0.182 1325.2 181.421  323.46 0.2500
 STA   6 TOTL 0.1070 0.0067     2.779

        FR - TO %W(FR)  %W(1)       W     T-R       P        H    DH/DHT
B10=  22 - OB 0.0000 0.0000     0.000  493.7    7.518  117.98 1.0000
 STA  22 TOTL 0.0000 0.0000     0.000

                        C O M P O N E N T    P E R F O R M A N C E
                        ------------------------------------------
  N  ID        BETA        XN        XN-MAP      HP      HPX/PHP  SF(N.2)     W-MAP   EFF-MAP    R-MAP    SMRELL    FLOW ID     EFF ID   MAPTYP
  1 FAN       1.0003  2501.342     98.922   6662.95     33.49   0.0000   962.297   0.8762    1.5086    21.376   QUIETENG   QUIETENG      1
  3 HPC       1.0040 11060.852     99.729   8005.98    100.20   0.0000    89.118   0.8357   22.2905    20.573    0.   0.     0.   0.      1
 10 HPT       0.0000 11060.852    100.302   8105.65     91.73   0.0000     1.000   0.8931    4.0658     6.211   JAN.2690   JAN.2690      1
 14 LPT       0.0000  2501.342     99.595   6697.13      0.00   0.0000     1.000   0.9246    5.1259     6.538   ANALYTIC   ANALYTIC      1
 14 LPT                          RNISF(1,14),(2,14),(3,14),(4,14)=   1.00164  1.00393   1.00000   1.00000

                            N O Z Z L E    P E R F O R M A N C E
                            ------------------------------------
  NOZZLE       (N)  TYP      FG         FN        RJ      CFG       CD     AREA(TH)  V-EXIT  SF(TH,2) SF(EX,2)   CFGT ID      CDT ID   MAPTYP
PRI (8-9)      18    1    1422.84    767.74   1.8424  0.9955   0.9657     294.19  1628.9     0.257    0.000  CFG MDXX   CD  MDXX      1
SEC (18-19)    25    1   12234.46   3415.99   1.9783  0.9960   0.9812    2185.20   995.6     1.947    0.000  CFG MDXX   CD  MDXX      1

                     F I N A L    E N G I N E    P E R F O R M A N C E
                     -------------------------------------------------
 BPR(1) RMIX(1) GAINMX(1) ANGMIX(1)     BPR(2) RMIX(2) GAINMX(2) ANGMIX(2)
13.4614  1.0738  0.0000     0.0000      0.0000  0.0000  0.0000     0.0000

    FG      FRAM     WFE    FARST    EPR     WAENG    WACOR   RCOA    FNR1   FNGF
 13657.3  9473.6  2201.4  .06775   1.274  413.939 1027.086  33.21  11192. 1.0000

    FN      SFC      WFT     FHV    NODISS    EFFTH     FN/WA  EFFOA   WFTR1  WFTGF
  4183.7  0.5262  2201.4  18550.     0      0.4091  10.1071 0.8455   6349. 1.0000

WARNING: TABLE(S) EXTRAPOLATED.

NPTOT = 48      NP1 = 16      NP2 = 16      NP3 = 16

FMT1
(/,2F10.0,F10.2,2F10.1,3F10.2,/,F10.1,2F10.3,F10.4,2F10.1,       ,          2F10.2
IPUNCH =    412          1       1385        450       1251       1553        827
           1178        734        122        123        530       1287       1257
            797       1148
 NAMES =   CASE       ALT         XM       DTAMB     V-KTAS   YCOMPD15    PAMB
         T-AMB(R)   HPX(3)    BLD(9)    BLD(10)      ERAM      WD(1)     WCOR(1)
            P(1)      T(1)


        13.      33000.       0.75        0.0      436.3       0.00       3.80     400.99
      100.2       0.032      0.000     0.9950      413.9     1027.1       5.49     446.23


FMT2
(F10.2,4F10.1,F10.2,F10.4,F10.2,/,8F10.2,)
IPUNCH =    314        651        665       1557       1323       1556       1558
            901        895        888       1174       1167         30         23
           1313       1306
 NAMES =   BPR(1)      FG       F-RAM   YCOMPD19    WFT       YCOMPD18  YCOMPD20
           RC-OA     R(25)     R(18)      T(27)     T(20)    AREA(27)  AREA(20)
           WD(27)    WD(20)

      13.46     13657.3     9473.6     4079.2     2201.4     104.50     0.5396      33.21
       1.98        1.84     412.06    1166.80    2185.20     294.19     385.32      28.23

FMT3
(2F10.1,F10.2,4F10.4,F10.1/F10.3,F10.1,6F10.0,)
IPUNCH =   1459       1448       1157        413        416        415        418
            698       1578        274       1554       1554       1554       1554
           1554       1554
 NAMES =   XN(14)     XN(3)      T(10)     CD-18     CFG-19      CD-8      CFG-9
           HP(1)    YCOMPD40  BLDP(9)  YCOMPD16  YCOMPD16  YCOMPD16  YCOMPD16
         YCOMPD16  YCOMPD16

     2501.3     11060.9    2814.62     0.9812     0.9960     0.9657     0.9955     6662.9
      0.995        54.4     99999.     99999.     99999.     99999.     99999.     99999.
```

```
TERMAP (VER 12)  TITLE=  NASA LOW NOISE MODEL (FLOW SCALE DOWN OF MDXX BPR=14 SHORT BYP DUCT MODEL)      DATE= 05-26-92 CASE=  14.0
(CMS  04-06-92) STITLE= 35000 FT, 0.75 MN, MAX CLIMB, RIT=2355 F                                        TIME= 16:15:20 PAGE=    20

   ALT    PAMB   TAMBF  TAMBR   DTAMB DTAMTP PRELHM  KTAS    KCAS    XM     RPR   DEFF   ERAM     P1    T1R   DEFTIP ERAMTP  PTIP  TTIPR
 35000.  3.458 -65.82 393.85    0.0    0.0    0.0  432.4   253.4  0.750  1.446 0.9950 0.9950  4.999 438.29 0.0000 0.0000  0.000   0.0

(N) ID    NSI    T-R      P       W-COR      W       R       EFF      FAR      AREA   XMN      PS     THETA  DELTA     H     SF-N,1  (N)
--- --    ---    ---      -       -----      -       -       ---      ---      ----   ---      --     -----  -----     -     ------  ---
 1 FAN     0    438.3    4.999 1037.976  384.097  1.3878  0.8917  0.00000     0.0  0.000    0.000   0.845  0.340   104.70  1.0191    1
 2 DELP    0    486.6    6.938   55.353   26.979  0.9898  0.0000  0.00000   384.3  0.252    6.637   0.938  0.472   116.27  0.2349    2
 3 HPC   110    486.6    6.867   55.934   26.984 25.0256  0.8546  0.00000     0.0  0.000    0.000   0.938  0.467   116.27  1.0241    3
 4 COOL    0   1317.7  171.861    3.336   24.472  0.0000  0.0000  0.00000     0.0  0.000    0.000   2.541 11.694   321.53  0.0000    4
   DELP    0   1317.7  171.861    3.336   24.472  1.0000  0.0000  0.00000    23.7  0.250  164.740   2.541 11.694   321.53  0.0000    5
   DELP    0   1317.7  171.861    3.336   24.472  0.9778  0.0000  0.00000    20.6  0.291  162.317   2.541 11.694   321.53  0.4000    6
   HX C    0   1317.7  168.043    3.046   21.854  1.0000  0.0000  0.00000    26.7  0.200  163.545   2.541 11.435   321.53  0.0000    7
   BURN    0   1302.4  168.043    3.029   21.854  0.9818  0.9990  0.00000    26.5  0.200  163.542   2.511 11.435   317.57  0.6799    8
   COOL    0   2899.8  164.983    4.725   22.432  0.0000  0.0000  0.02649     0.0  0.000    0.000   5.591 11.226   789.99  0.0000    9
   HPT     0   2814.6  164.983    5.093   23.844  4.8244  0.8971  0.02488     0.0  0.000    0.000   5.245 11.226   762.25  1.0046   10
   PWRK    0   2047.3   34.197   20.358   23.844  0.0000  0.0000  0.02488     0.0  0.000    0.000   3.947  2.327   533.37  0.0007   11
   COOL    0   2030.0   34.197   21.073   24.786  0.0000  0.0000  0.02391     0.0  0.000    0.000   3.914  2.327   527.77  0.0000   12
   DELP    0   1983.0   34.197   22.007   26.190  0.9970  0.0000  0.02260   196.0  0.200 - 33.312   3.823  2.327   513.42  0.1163   13
   LPT     0   1983.0   34.094   22.581   26.189  5.1466  0.9281  0.02260     0.0  0.000    0.000   3.724  2.320   513.43  1.0003   14
   COOL    0   1371.5    6.625   94.474   26.189  0.0000  0.0000  0.02260     0.0  0.000    0.000   2.644  0.451   342.86  0.0000   15
   DELP    0   1371.2    6.625   95.080   26.360  0.9923  0.0000  0.02245   406.6  0.454    5.784   2.644  0.451   342.72  0.0609   16
   COOL    0   1371.2    6.573   95.820   26.360  0.0000  0.0000  0.02245     0.0  0.000    0.000   2.644  0.447   342.72  0.0000   17
   NOZZ    0   1365.5    6.573   96.502   26.603  1.9009  0.0000  0.02224     1.0  0.000    0.000   2.633  0.447   341.12  0.0000   18
    TH8    0   1161.8    3.519  166.284   26.603  1.8681  0.0000  0.02224   294.2  1.000    3.519   2.240  0.239   287.10  0.9997   19
20  EX9    0   1161.8    3.519  166.284   26.603  1.0176  0.0000  0.02224   294.2  1.000    3.458   2.240  0.239   287.10  0.0000   20
--- --    ---    ---      -       -----      -       -       ---      ---      ----   ---      --     -----  -----     -     ------  ---
21 COOL    0    486.6    6.938  732.710  357.118  0.0000  0.0000  0.00000     0.0  0.000    0.000   0.938  0.472   116.27  0.0000   21
22 DELP    0    486.6    6.938  732.710  357.118  0.9963  0.0000  0.00000  3500.0  0.385    6.262   0.938  0.472   116.27  0.0378   22
23 HX H    0    486.6    6.912  735.421  357.118  1.0000  0.0185  0.00000  3500.0  0.387    6.233   0.938  0.470   116.27  0.0000   23
24 DELP    0    487.6    6.912  736.187  357.118  1.0000  0.0000  0.00000  3500.0  0.388    6.232   0.940  0.470   116.52  0.0000   24
25 NOZZ    0    487.6    6.912  736.187  357.118  1.9990  0.0000  0.00000     1.0  0.000    0.000   0.940  0.470   116.52  0.0000   25
26 TH18    0    406.1    3.649 1272.892  357.118  1.8946  0.0000  0.00000  2185.2  1.000    3.648   0.783  0.248    97.01  1.0003   26
27 EX19    0    406.1    3.649 1272.892  357.118  1.0551  0.0000  0.00000  2185.2  1.000    3.458   0.783  0.248    97.01  0.0000   27
--- --    ---    ---      -       -----      -       -       ---      ---      ----   ---      --     -----  -----     -     ------  ---

S 1= RC-OA   =    34.3781 : S 2=EMAP(7) =   -15.3381 : S 3= EFF(23)=     0.0185

Y 1=     0.8966= COMP POLY EFF AT STATION  1                       : Y16=99999.0000=           0.000000 -              0.000000 +99999.0000
Y 2=     0.9043= COMP POLY EFF AT STATION  3                       : Y17=     3.2642=            P(25)  -   PS(26)                +    0.0000
Y 3= 2354.9070=            T(10)  -         459.669922 +    0.0000 : Y18=    96.0982=          YCOMPD17 *           29.440002 +    0.0000
Y 4=  228.8794=            H(10)  -    H(11)           +    0.0000 : Y19= 3898.1001=             FN     - YCOMPD18            +    0.0000
Y 5=   43.6337=          YCOMPD 4 / THETA 10           +    0.0000 : Y20=     0.5345=            WFE    / YCOMPD19            +    0.0000
Y 6=  170.5674=            H(14)  -    H(15)           +    0.0000 : Y21=    20.9354=            T(1)   **           0.500000 +    0.0000
Y 7=   45.8081=          YCOMPD 6 / THETA 14           +    0.0000 : Y22=     4.1878=          YCOMPD21 /    P(1)               +    0.0000
Y 8=    1.2706=            RNI(14) /           0.379900 +   0.0000 : Y23= 1608.5305=          YCOMPD22 *    WD(1)              +   -0.0000
Y 9= 4234.8008=          XNMAP 14 *           42.203995 +   0.0000 : Y39=     0.6010=           V-19    /    V-9                +    0.0000
Y10=    1.9296=          THETA 14 **           0.500000 +   0.0000 : Y40=     0.9950=          0.000000 -            0.000000 +    0.9950
Y11= 8171.6484=          YCOMPD 9 * YCOMPD10           +    0.0000 : Y41=    31.6007=           HP(14)  *            0.005000 +    0.0000
Y12=   10.0265=            FAR(9)  -           0.000000 +  10.0000 : Y42=     1.0144=            T(24)  -    T(23)             +    0.0000
Y15=    0.0000=          0.000000 -            0.000000 +   0.0000 : Y43=11314.5664=            XN(1)  *            4.490000 +    0.0000

T 1=  375.0002  X=YCOMPD15 Z=            W=          ID=03/11/91 E=2 : T 3=      0.4289  X=RMAP(14) Z=XNMAP 14 W=          ID=LPT X MN E=1
T 2= 2184.6997  X=  XM      Z=XNMAP   1 W=          ID=BYP AREA E=3 : T 4=      0.9950  X=YCOMPD23 Z=  XM      W=          ID=INLETREC E=1

P 1=YCOMPD41--> HPX(1)   : P 4=YTABLE 4--> DEFF

    --VARY-- ---HI--- ---LO---  (+)   OBJECT = TARGET   (+) LIM
C19= AREA(26)  2817.00  2183.00 1.00  AREA(26) YTABLE 2 0.00 L=1

MODE=YCOMPD 3  PLA=  2355.000  ADDPLA=     0.000  PLA LIMIT= PLA
IDES=0  NVAR=10  MAX ERR# 1= 19.CONSTR.  = 0.00023  MATRX= 0  LOOP= 14
IOMT  LOOPS=  1  MAX ERROR =        0.   = 0.00000

                  B L E E D S   A N D   L E A K A G E S
                  -------------------------------------
     FR - TO %W(FR)  %W(1)       W     T-R      P        H    DH/DHT :      FR - TO %W(FR)  %W(1)       W     T-R      P        H    DH/DHT
B 3=  3 - 12 0.0520 0.0037     1.403 1076.0  87.681   259.95 0.7000 : B 7=  3 - OB 0.0000 0.0000     0.000  993.7   67.581   239.43 0.6000
  5=  3 - 17 0.0090 0.0006     0.243  700.1  21.846   167.59 0.2500 : B 9=  3 - OB 0.0321 0.0023     0.866  910.7   50.887   218.90 0.5000
 TA   3 TOTL 0.0931 0.0065     2.512

     FR - TO %W(FR)  %W(1)       W     T-R      P        H    DH/DHT :      FR - TO %W(FR)  %W(1)       W     T-R      P        H    DH/DHT
 1=   6 -  9 0.0577 0.0037     1.412 1317.7 168.043   321.53 1.0000 : B 6=  6 - 21 0.0000 0.0000     0.000 1317.7 168.043   321.53 1.0000
 2=   6 - 11 0.0385 0.0025     0.942 1317.7 168.043   386.07 1.0000 : B 8=  6 - OB 0.0038 0.0002     0.093 1317.7 168.043   321.53 1.0000
 4=   6 - 15 0.0070 0.0004     0.171 1317.7 170.906   321.53 0.2500
 TA   6 TOTL 0.1070 0.0068     2.619

     FR - TO %W(FR)  %W(1)       W     T-R      P        H    DH/DHT
 0=  22 - OB 0.0000 0.0000     0.000  486.6    6.912   116.27 1.0000
 TA  22 TOTL 0.0000 0.0000     0.000

                  C O M P O N E N T   P E R F O R M A N C E
                  -----------------------------------------
 N  ID       BETA       XN       XN-MAP      HP     HPX/PHP  SF(N,2)    W-MAP  EFF-MAP    R-MAP    SMRELL   FLOW ID    EFF ID  MAPTYP
 1 FAN     0.9912  2519.948    100.556   6289.02    31.60   0.0000   972.499   0.8750   1.5282   20.783  QUIETENG  QUIETENG     1
 3 HPC     0.9998 11035.555    100.225   7535.49   100.20   0.0000    90.699   0.8345  22.8427   20.155   0.  0.    0.  0.      1
10 HPT     0.0000 11035.555    100.074   7635.43    86.04   0.0000     1.000   0.8930   4.0636    6.204  JAN.2690  JAN.2690     1
14 LPT     0.0000  2519.948    100.341   6320.14     0.00   0.0000     1.000   0.9249   5.1466    6.558  ANALYTIC  ANALYTIC     1
14 LPT                      RNISF(1,14),(2,14),(3,14),(4,14)=   1.00135  1.00321  1.00000  1.00000

                     N O Z Z L E   P E R F O R M A N C E
                     -----------------------------------
 NOZZLE       (N)  TYP      FG         FN        RJ      CFG      CD     AREA(TH)  V-EXIT  SF(TH,2) SF(EX,2)   CFGT ID     CDT ID  MAPTYP
PRI (8-9)     18    1    1371.30    759.37   1.9009  0.9957  0.9691    294.19  1644.6     0.247    0.000  CFG MDXX  CD  MDXX      1
SEC (18-19)   25    1   11334.95   3234.83   1.9990  0.9961  0.9820   2165.20   988.4     1.858    0.000  CFG MDXX  CD  MDXX      1
                F I N A L   E N G I N E   P E R F O R M A N C E
                -----------------------------------------------
 EPR(1) RMIX(1) GAINMX(1) ANGMIX(1)     BPR(2) RMIX(2) GAINMX(2) ANGMIX(2)
13.2371  1.0516  0.0000     0.0000      0.0000  0.0000  0.0000     0.0000

   FG      FRAM    WFE   FARST   EPR     WAENG    WACOR   RCOA    FNR1   FNGF
12706.2  8712.1  2083.7 .06775  1.315  384.097 1037.976  34.38  11742. 1.0000

   FN      SFC     WFT    FHV   NODISS   EFFTH    FN/WA  EFFOA   WFTR1  WFTGF
 3994.2  0.5217  2083.7 18550.    0     0.4023  10.3989 0.8443   6664. 1.0000

WARNING: TABLE(S) EXTRAPOLATED. NON-ZERO NSI(S).

NPTOT = 48      NP1 = 16      NP2 = 16      NP3 = 16

FMT1
(/,2F10.0,F10.2,2F10.1,3F10.2,/,F10.1,2F10.3,F10.4,2F10.1,      ,       2F10.2
IPUNCH =    412         1      1385       450      1251      1553       827
           1178       734       122       123       530      1287      1257
            797      1148
 NAMES =  CASE      ALT        XM       DTAMB    V-KTAS  YCOMPD15   PAMB
        T-AMB(R)  HPX(3)   BLD(9)   BLD(10)    ERAM      WD(1)    WCOR(1)
          P(1)      T(1)


      14.     35000.      0.75       0.0      432.4      0.00      3.46    393.85
   100.2       0.032     0.000    0.9950      384.1    1038.0      5.00    438.29


FMT2
(F10.2,4F10.1,F10.2,F10.4,F10.2,/,8F10.2,)
IPUNCH =    314       651       665      1557      1323      1556      1558
            901       895       888      1174      1167        30        23
           1313      1306
 NAMES =  BPR(1)     FG       F-RAM   YCOMPD19    WFT     YCOMPD18 YCOMPD20
          RC-OA     R(25)     R(18)     T(27)     T(20)   AREA(27) AREA(20)
          WD(27)    WD(20)

    13.24   12706.2    8712.1    3898.1    2083.7     96.10    0.5345     34.38
     2.00      1.90    406.14   1161.78   2185.20    294.19    357.12     26.60

FMT3
(2F10.1,F10.2-4F10.4,F10.1/F10.3,F10.1,6F10.0,)
IPUNCH =   1459      1448      1157       413       416       415       418
            698      1578       274      1554      1554      1554      1554
           1554      1554
 NAMES =  XN(14)    XN(3)     T(10)     CD-18    CFG-19    CD-8      CFG-9
          HP(1)   YCOMPD40  BLDP(9)  YCOMPD16  YCOMPD16  YCOMPD16  YCOMPD16
        YCOMPD16  YCOMPD16

   2519.9   11035.6   2814.58    0.9820    0.9961    0.9691    0.9957    6289.0
    0.995      50.9    99999.    99999.    99999.    99999.    99999.    99999.
```

```
TERMAP (VER 12)  TITLE=  NASA LOW NOISE MODEL (FLOW SCALE DOWN OF MDXX BPR=14 SHORT BYP DUCT MODEL)        DATE= 05-26-92 CASE=  15.0
(CMS  04-06-92) STITLE= 37000 FT. 0.75 MN, MAX CLIMB, RIT=2355 F                                       TIME= 16:15:20 PAGE=    21

   ALT    PAMB   TAMBF  TAMBR  DTAMB DTAMTP PRELHM  KTAS   KCAS    XM     RPR   DEFF   ERAM     P1    T1R   DEFTIP ERAMTP  PTIP  TTIPR
 37000.  3.142 -69.70 389.97    0.0    0.0    0.0  430.2  242.0  0.750  1.446 0.9950 0.9950  4.542 433.97 0.0000 0.0000  0.000   0.0
```

(N)	ID	NSI	T-R	P	W-COR	W	R	EFF	FAR	AREA	XMN	PS	THETA	DELTA	H	SF-N,1	(N)
1	FAN	0	434.0	4.542	1043.749	352.669	1.3957	0.8909	0.00000	0.0	0.000	0.000	0.837	0.309	103.67	1.0191	1
2	DELP	0	482.7	6.339	55.845	24.970	0.9896	0.0000	0.00000	384.3	0.255	6.060	0.931	0.431	115.34	0.2349	2
3	HPC	110	482.7	6.274	56.437	24.973	25.3486	0.8542	0.00000	0.0	0.000	0.000	0.931	0.427	115.34	1.0241	3
4	COOL	0	1312.7	159.028	3.330	22.648	0.0000	0.0000	0.00000	0.0	0.000	0.000	2.531	10.821	320.23	0.0000	4
5	DELP	0	1312.7	159.028	3.330	22.648	1.0000	0.0000	0.00000	23.7	0.250	152.464	2.531	10.821	320.23	0.0000	5
6	DELP	0	1312.7	159.028	3.330	22.648	0.9779	0.0000	0.00000	20.6	0.290	150.230	2.531	10.821	320.23	0.4000	6
7	HX C	0	1312.7	155.509	3.041	20.225	1.0000	0.0000	0.00000	26.7	0.200	151.362	2.531	10.582	320.23	0.0000	7
8	BURN	0	1297.4	155.509	3.023	20.225	0.9819	0.9990	0.00000	26.5	0.200	151.360	2.501	10.582	316.28	0.6799	8
9	COOL	0	2899.8	152.688	4.725	20.762	0.0000	0.0000	0.02656	0.0	0.000	0.000	5.591	10.390	790.09	0.0000	9
10	HPT	0	2814.4	152.688	5.093	22.070	4.8215	0.8969	0.02495	0.0	0.000	0.000	5.245	10.390	762.27	1.0046	10
11	PWRK	0	2047.6	31.668	20.349	22.070	0.0000	0.0000	0.02495	0.0	0.000	0.000	3.948	2.155	533.50	0.0007	11
12	COOL	0	2030.1	31.668	21.063	22.941	0.0000	0.0000	0.02398	0.0	0.000	0.000	3.914	2.155	527.84	0.0000	12
13	DELP	0	1982.9	31.668	21.994	24.240	0.9970	0.0000	0.02267	196.0	0.200	30.850	3.823	2.155	513.43	0.1163	13
14	LPT	0	1982.9	31.573	22.569	24.240	5.1626	0.9273	0.02267	0.0	0.000	0.000	3.723	2.148	513.43	1.0003	14
15	COOL	0	1371.0	6.116	94.704	24.240	0.0000	0.0000	0.02267	0.0	0.000	0.000	2.643	0.416	342.75	0.0000	15
16	DELP	0	1370.6	6.116	95.311	24.399	0.9922	0.0000	0.02252	406.6	0.455	5.335	2.643	0.416	342.60	0.0609	16
17	COOL	0	1370.6	6.068	96.057	24.399	0.0000	0.0000	0.02252	0.0	0.000	0.000	2.643	0.413	342.60	0.0000	17
18	NOZZ	0	1364.9	6.068	96.739	24.624	1.9314	0.0000	0.02231	1.0	0.000	0.000	2.632	0.413	341.00	0.0000	18
19	TH8	0	1161.3	3.248	166.695	24.624	1.8681	0.0000	0.02231	294.2	1.000	3.249	2.239	0.221	287.00	0.9997	19
20	EX9	0	1161.3	3.248	166.695	24.624	1.0339	0.0000	0.02231	294.2	1.000	3.142	2.239	0.221	287.00	0.0000	20
21	COOL	0	482.7	6.339	732.891	327.699	0.0000	0.0000	0.00000	0.0	0.000	0.000	0.931	0.431	115.34	0.0000	21
22	DELP	0	482.7	6.339	732.891	327.699	0.9963	0.0000	0.00000	3500.0	0.385	5.721	0.931	0.431	115.34	0.0378	22
23	HX H	0	482.7	6.316	735.604	327.699	1.0000	0.0185	0.00000	3500.0	0.387	5.695	0.931	0.430	115.34	0.0000	23
24	DELP	0	483.8	6.316	736.381	327.699	1.0000	0.0000	0.00000	3500.0	0.388	5.694	0.933	0.430	115.59	0.0000	24
25	NOZZ	0	483.8	6.316	736.381	327.699	2.0102	0.0000	0.00000	1.0	0.000	0.000	0.933	0.430	115.59	0.0000	25
26	TH18	0	402.9	3.334	1273.259	327.699	1.8946	0.0000	0.00000	2185.2	1.000	3.333	0.777	0.227	96.23	1.0000	26
27	EX19	0	402.9	3.334	1273.259	327.699	1.0610	0.0000	0.00000	2185.2	1.000	3.142	0.777	0.227	96.23	0.0000	27

```
S 1= RC-OA   =    35.0117 : S 2=EMAP(7) =  -15.3219 : S 3= EFF(23)=     0.0185

Y 1=     0.8959= COMP POLY EFF AT STATION  1                       : Y16=99999.0000=          0.000000 -                0.000000 +99999.0000
Y 2=     0.9042= COMP POLY EFF AT STATION  3                       : Y17=     2.9827=          P(25)    -   PS(26)                +     0.0000
Y 3= 2354.7175=           T(10)   -          459.669922 +   0.0000 : Y18=    87.8100=          YCOMPD17 *                29.440002 +     0.0000
Y 4=   228.7607=          H(10)   -    H(11)            +   0.0000 : Y19= 3633.6321=          FN       - YCOMPD18                +     0.0000
Y 5=    43.6154=        YCOMPD 4 / THETA 10             +   0.0000 : Y20=     0.5323=          WFE      / YCOMPD19                +     0.0000
Y 6=   170.6804=          H(14)   -    H(15)            +   0.0000 : Y21=    20.8320=          T(1)     **              0.500000 +     0.0000
Y 7=    45.8418=        YCOMPD 6 / THETA 14             +   0.0000 : Y22=     4.5864=          YCOMPD21 /   P(1)                 +     0.0000
Y 8=     1.1767=          RNI(14) /            0.379900 +   0.0000 : Y23= 1617.4768=          YCOMPD22 *   WD(1)                +    -0.0000
Y 9= 4256.7148=         XNMAP 14 *            42.203995 +   0.0000 : Y39=     0.5987=          V-19     /   V-9                  +     0.0000
Y10=     1.9296=         THETA 14 **            0.500000 +   0.0000 : Y40=     0.9950=          0.000000 -                0.000000 +     0.9950
Y11= 8213.6328=         YCOMPD 9 * YCOMPD10             +   0.0000 : Y41=    29.2687=          HP(14)   *                0.005000 +     0.0000
Y12=    10.0266=          FAR(9)  -            0.000000 +  10.0000 : Y42=     1.0212=          T(24)    -   T(23)                +     0.0000
Y15=     0.0000=         0.000000 -            0.000000 +   0.0000 : Y43=11372.6914=          XN(1)    *                4.490000 +     0.0000

T 1=  375.0002  X=YCOMPD15 Z=          W=         ID=03/11/91 E=2 : T 3=     0.4304  X=RMAP(14) Z=XNMAP 14 W=          ID=LPT X MN E=1
T 2= 2184.6997  X=  XM     Z=XNMAP  1 W=          ID=BYP AREA E=3 : T 4=     0.9950  X=YCOMPD23 Z=  XM     W=          ID=INLETREC E=1

P 1=YCOMPD41--> HPX(1)  : P 4=YTABLE 4--> DEFF

    --VARY-- ---HI--- ---LO---  (+)   OBJECT = TARGET   (+) LIM
C19= AREA(26)  2817.00  2183.00 1.00  AREA(26) YTABLE 2 0.00 L=1

MODE=YCOMPD 3  PLA=  2355.000  ADDPLA=     0.000  PLA LIMIT= PLA
IDES=0  NVAR=10  MAX ERR# 6= 10.HP+10*WD = 0.00027  MATRX= 0  LOOP= 14
IOMT  LOOPS=  1  MAX ERROR =        0.      = 0.00000

                        B L E E D S    A N D    L E A K A G E S
                        ----------------------------------------
      FR - TO %W(FR)  %W(1)       W     T-R      P        H    DH/DHT :        FR - TO %W(FR)  %W(1)        W     T-R      P        H    DH/DHT
B 3=   3 - 12 0.0520 0.0037     1.299 1071.2   80.994  258.77 0.7000 : B 7=   3 - OB 0.0000 0.0000     0.000   989.1  62.379  238.28 0.6000
B 5=   3 - 17 0.0090 0.0006     0.225  695.9   20.080  166.57 0.2500 : B 9=   3 - OB 0.0321 0.0023     0.802   906.2  46.927  217.79 0.5000
 STA   3 TOTL 0.0931 0.0066     2.325

      FR - TO %W(FR)  %W(1)       W     T-R      P        H    DH/DHT :        FR - TO %W(FR)  %W(1)        W     T-R      P        H    DH/DHT
B 1=   6 -  9 0.0577 0.0037     1.307 1312.7 155.509  320.23 1.0000 : B 6=   6 - 21 0.0000 0.0000     0.000 1312.7 155.509  320.23 1.0000
B 2=   6 - 11 0.0385 0.0025     0.872 1312.7 155.509  384.57 1.0000 : B 8=   6 - OB 0.0038 0.0002     0.086 1312.7 155.509  320.23 1.0000
B 4=   6 - 15 0.0070 0.0004     0.159 1312.7 158.148  320.23 0.2500
 STA   6 TOTL 0.1070 0.0069     2.423

      FR - TO %W(FR)  %W(1)       W     T-R      P        H    DH/DHT
B10=  22 - OB 0.0000 0.0000     0.000   482.7    6.316  115.34 1.0000
 STA  22 TOTL 0.0000 0.0000     0.000

                       C O M P O N E N T    P E R F O R M A N C E
                       ------------------------------------------
  N  ID       BETA       XN        XN-MAP      HP     HPX/PHP  SF(N,2)    W-MAP   EFF-MAP    R-MAP    SMRELL    FLOW ID     EFF ID   MAPTYP
  1 FAN      0.9861   2532.894    101.574   5825.22    29.27   0.0000   977.908   0.8742    1.5388    20.305   QUIETENG   QUIETENG     1
  3 HPC      0.9973  11017.508    100.464   6961.53   100.20   0.0000    91.515   0.8341   23.1364    19.913    0.  0.     0.  0.      1
 10 HPT      0.0000  11017.508     99.915   7063.71    79.37   0.0000     1.000   0.8928    4.0612     6.199   JAN.2690   JAN.2690     1
 14 LPT      0.0000   2532.894    100.861   5853.73     0.00   0.0000     1.000   0.9250    5.1626     6.572   ANALYTIC   ANALYTIC     1
 14 LPT                         RNISF(1,14),(2,14),(3,14),(4,14)=   1.00094   1.00221   1.00000   1.00000

                            N O Z Z L E    P E R F O R M A N C E
                            ------------------------------------
  NOZZLE        (N)  TYP      FG         FN       RJ      CFG      CD     AREA(TH)  V-EXIT  SF(TH,2) SF(EX,2)   CFGT ID     CDT ID   MAPTYP
PRI (8-9)       18    1     1283.47    719.90   1.9314  0.9958  0.9714    294.19   1644.3     0.241    0.000   CFG MDXX   CD  MDXX     1
SEC (18-19)     25    1    10397.64   3001.54   2.0102  0.9961  0.9822   2185.20    984.5     1.812    0.000   CFG MDXX   CD  MDXX     1

                     F I N A L    E N G I N E    P E R F O R M A N C E
                     -------------------------------------------------
  BPR(1) RMIX(1) GAINMX(1) ANGMIX(1)     BPR(2) RMIX(2) GAINMX(2) ANGMIX(2)
 13.1238  1.0408  0.0000    0.0000       0.0000  0.0000  0.0000     0.0000

    FG      FRAM     WFE    FARST    EPR     WAENG    WACOR    RCOA    FNR1   FNGF
 11681.1  7959.7  1934.1  .06775   1.336  352.669 1043.749   35.01  12041. 1.0000

    FN      SFC      WFT     FHV    NODISS    EFFTH    FN/WA  EFFOA   WFTR1  WFTGF
  3721.4  0.5197  1934.1  18550.      0      0.3972  10.5522 0.8439   6841. 1.0000

WARNING: TABLE(S) EXTRAPOLATED. NON-ZERO NSI(S).

NPTOT = 48      NP1 = 16      NP2 = 16      NP3 = 16

FMT1
(/,2F10.0,F10.2,2F10.1,3F10.2,/,F10.1,2F10.3,F10.4,2F10.1,     ,          2F10.2
IPUNCH =    412          1       1385        450       1251       1553        827
           1178        734        122        123        530       1287       1257
            797       1148
 NAMES =  CASE       ALT         XM       DTAMB     V-KTAS   YCOMPD15   PAMB
         T-AMB(R)   HPX(3)   BLD(9)    BLD(10)     ERAM       WD(1)    WCOR(1)
           P(1)       T(1)


      15.     37000.      0.75        0.0       430.2       0.00       3.14     389.97
    100.2      0.032     0.000     0.9950       352.7     1043.7       4.54     433.97


FMT2
(F10.2,4F10.1,F10.2,F10.4,F10.2,/,8F10.2,)
IPUNCH =    314        651        665       1557       1323       1556       1558
            901        895        888       1174       1167         30         23
           1313       1306
 NAMES =  BPR(1)      FG       F-RAM    YCOMPD19    WFT      YCOMPD18  YCOMPD20
          RC-OA      R(25)     R(18)     T(27)      T(20)   AREA(27)  AREA(20)
          WD(27)     WD(20)

    13.12    11681.1     7959.7    3633.6    1934.1      87.81     0.5323      35.01
     2.01       1.93     402.91   1161.33   2185.20     294.19     327.70      24.62

FMT3
(2F10.1,F10.2,4F10.4,F10.1/F10.3,F10.1,6F10.0,)
IPUNCH =   1459       1448       1157        413        416        415        418
            698       1578        274       1554       1554       1554       1554
           1554       1554
 NAMES =  XN(14)     XN(3)      T(10)    CD-18      CFG-19     CD-8       CFG-9
          HP(1)    YCOMPD40  BLDP(9)  YCOMPD16  YCOMPD16  YCOMPD16  YCOMPD16
        YCOMPD16  YCOMPD16

   2532.9    11017.5    2814.39     0.9822     0.9961     0.9714     0.9958     5825.2
    0.995       46.9     99999.     99999.     99999.     99999.     99999.     99999.
```

```
TERMAP (VER 12)  TITLE=  NASA LOW NOISE MODEL (FLOW SCALE DOWN OF MDXX BPR=14 SHORT BYP DUCT MODEL)        DATE= 05-26-92 CASE=  16.0
(CMS  04-06-92) STITLE= 37000 FT, 0.77 MN, MAX CRUISE, RIT=2250 F                                           TIME= 16:15:20 PAGE=    22
```

ALT	PAMB	TAMBF	TAMBR	DTAMB	DTAMTP	PRELHM	KTAS	KCAS	XM	RPR	DEFF	ERAM	P1	T1R	DEFTIP	ERAMTP	PTIP	TTIPR
37000.	3.142	-69.70	389.97	0.0	0.0	0.0	441.7	249.1	0.770	1.474	0.9950	0.9950	4.630	436.35	0.0000	0.0000	0.000	0.0

(N)	ID	NSI	T-R	P	W-COR	W	R	EFF	FAR	AREA	XMN	PS	THETA	DELTA	H	SF-N,1	(N)
1	FAN	0	436.4	4.630	1013.410	348.064	1.3539	0.8941	0.00000	0.0	0.000	0.000	0.841	0.315	104.24	1.0191	1
2	DELP	0	480.5	6.268	53.118	23.537	0.9907	0.0000	0.00000	384.3	0.241	6.019	0.927	0.427	114.82	0.2349	2
3	HPC	0	480.5	6.210	53.618	23.537	23.5919	0.8576	0.00000	0.0	0.000	0.000	0.927	0.423	114.82	1.0241	3
4	COOL	0	1278.1	146.495	3.353	21.294	0.0000	0.0000	0.00000	0.0	0.000	0.000	2.464	9.968	311.31	0.0000	4
5	DELP	0	1278.1	146.495	3.353	21.294	1.0000	0.0000	0.00000	23.7	0.251	140.358	2.464	9.968	311.31	0.0000	5
6	DELP	0	1278.1	146.495	3.353	21.294	0.9775	0.0000	0.00000	20.6	0.292	138.268	2.464	9.968	311.31	0.4000	6
7	HX C	0	1278.1	143.204	3.063	19.015	1.0000	0.0000	0.00000	26.7	0.201	139.327	2.464	9.744	311.31	0.0000	7
8	BURN	0	1263.4	143.204	3.046	19.015	0.9816	0.9990	0.00000	26.5	0.201	139.324	2.436	9.744	307.53	0.6799	8
9	COOL	0	2792.1	140.566	4.728	19.492	0.0000	0.0000	0.02505	0.0	0.000	0.000	5.383	9.565	755.59	0.0000	9
10	HPT	0	2710.3	140.566	5.093	20.719	4.8294	0.8971	0.02353	0.0	0.000	0.000	5.056	9.565	729.25	1.0046	10
11	PWRK	0	1965.9	29.107	20.366	20.719	0.0000	0.0000	0.02353	0.0	0.000	0.000	3.790	1.981	509.05	0.0007	11
12	COOL	0	1949.8	29.107	21.085	21.539	0.0000	0.0000	0.02262	0.0	0.000	0.000	3.759	1.981	503.89	0.0000	12
13	DELP	0	1904.9	29.107	22.025	22.762	0.9970	0.0000	0.02137	196.0	0.200	28.352	3.673	1.981	490.36	0.1163	13
14	LPT	0	1904.9	29.019	22.577	22.762	5.1125	0.9260	0.02137	0.0	0.000	0.000	3.581	1.975	490.37	1.0003	14
15	COOL	0	1316.4	5.676	93.891	22.762	0.0000	0.0000	0.02137	0.0	0.000	0.000	2.538	0.386	327.73	0.0000	15
16	DELP	0	1316.2	5.676	94.497	22.911	0.9924	0.0000	0.02123	406.6	0.449	4.967	2.538	0.386	327.62	0.0609	16
17	COOL	0	1316.2	5.633	95.221	22.911	0.0000	0.0000	0.02123	0.0	0.000	0.000	2.538	0.383	327.62	0.0000	17
18	NOZZ	0	1310.8	5.633	95.904	23.123	1.7928	0.0000	0.02103	1.0	0.000	0.000	2.527	0.383	326.12	0.0000	18
19	TH8	0	1125.8	3.142	159.342	23.123	1.7928	0.0000	0.02103	294.2	0.963	3.142	2.171	0.214	277.44	1.0000	19
20	EX9	0	1125.8	3.142	159.342	23.123	1.0000	0.0000	0.02103	294.2	0.963	3.142	2.171	0.214	277.44	0.0000	20
21	COOL	0	480.5	6.268	732.393	324.527	0.0000	0.0000	0.00000	0.0	0.000	0.000	0.927	0.427	114.82	0.0000	21
22	DELP	0	480.5	6.268	732.393	324.527	0.9963	0.0000	0.00000	3500.0	0.385	5.658	0.927	0.427	114.82	0.0378	22
23	HX H	0	480.5	6.245	735.100	324.527	1.0000	0.0185	0.00000	3500.0	0.387	5.632	0.927	0.425	114.82	0.0000	23
24	DELP	0	481.5	6.245	735.809	324.527	1.0000	0.0000	0.00000	3500.0	0.387	5.631	0.928	0.425	115.04	0.0000	24
25	NOZZ	0	481.5	6.245	735.809	324.527	1.9876	0.0000	0.00000	1.0	0.000	0.000	0.928	0.425	115.04	0.0000	25
26	TH18	0	401.0	3.296	1272.300	324.527	1.8947	0.0000	0.00000	2184.9	1.000	3.296	0.773	0.224	95.78	1.0000	26
27	EX19	0	401.0	3.296	1272.300	324.527	1.0490	0.0000	0.00000	2184.9	1.000	3.142	0.773	0.224	95.78	0.0000	27

```
S 1= RC-OA  =    31.6427 : S 2=EMAP(7) =  -14.7072 : S 3= EFF(23)=      0.0185

Y 1=      0.8985= COMP POLY EFF AT STATION  1                        : Y16=99999.0000=          0.000000 -              0.000000 +99999.0000
Y 2=      0.9056= COMP POLY EFF AT STATION  3                        : Y17=     2.9488=           P(25)   -   PS(26)              +     0.0000
Y 3= 2250.6099=           T(10)    -          459.669922 +   0.0000 : Y18=    86.8137=         YCOMPD17 *             29.440002 +     0.0000
Y 4=  220.2031=           H(10)    -    H(11)             +   0.0000 : Y19= 3161.1187=            FN    - YCOMPD18               +     0.0000
Y 5=   43.5549=         YCOMPD 4 / THETA 10               +   0.0000 : Y20=     0.5425=           WFE    / YCOMPD19               +     0.0000
Y 6=  162.6394=           H(14)    -    H(15)             +   0.0000 : Y21=    20.8890=            T(1)   **              0.500000 +     0.0000
Y 7=   45.4148=         YCOMPD 6 / THETA 14               +   0.0000 : Y22=     4.5120=          YCOMPD21 /     P(1)               +     0.0000
Y 8=    1.1299=           RNI(14) /               0.379900 +   0.0000 : Y23= 1570.4619=          YCOMPD22 *    WD(1)               +    -0.0000
Y 9= 4159.3125=          XNMAP 14 *              42.203995 +   0.0000 : Y39=     0.6290=           V-19    /   V-9                  +     0.0000
Y10=    1.8924=          THETA 14 **              0.500000 +   0.0000 : Y40=     0.9950=          0.000000 -              0.000000 +     0.9950
Y11= 7871.1055=         YCOMPD 9 * YCOMPD10               +   0.0000 : Y41=    26.1888=           HP(14)  *               0.005000 +     0.0000
Y12=   10.0251=           FAR(9)  -               0.000000 +  10.0000 : Y42=     0.9270=            T(24)  -     T(23)              +     0.0000
Y15=    0.0000=          0.000000 -               0.000000 +   0.0000 : Y43=10898.4219=            XN(1)  *               4.490000 +     0.0000

T 1=  375.0002  X=YCOMPD15 Z=            W=          ID=03/11/91 E=2 : T 3=     0.4268  X=RMAP(14) Z=XNMAP 14 W=          ID=LPT X MN E=1
T 2= 2184.6992  X=  XM       Z=XNMAP  1 W=           ID=BYP AREA E=3 : T 4=     0.9950  X=YCOMPD23 Z=  XM      W=          ID=INLETREC E=1

P 1=YCOMPD41--> HPX(1)   : P 4=YTABLE 4--> DEFF

     --VARY-- ---HI--- ---LO---  (+)   OBJECT = TARGET   (+) LIM
C19= AREA(26)  2817.00  2183.00 1.00  AREA(26) YTABLE 2 0.00 L=1

MODE=YCOMPD 3  PLA=  2250.000  ADDPLA=     0.000  PLA LIMIT= PLA
IDES=0  NVAR=10  MAX ERR# 6= 10.HP+10*WD = 0.00035  MATRX= 0  LOOP= 15
IOMT  LOOPS=  1  MAX ERROR =      0.      = 0.00000
```

B L E E D S   A N D   L E A K A G E S

	FR - TO	%W(FR)	%W(1)	W	T-R	P	H	DH/DHT
B 3=	3 - 12	0.0520	0.0035	1.224	1045.7	75.320	252.37	0.7000
B 5=	3 - 17	0.0090	0.0006	0.212	685.0	19.197	163.94	0.2500
STA	3 TOTL	0.0953	0.0064	2.243				
B 7=	3 - OB	0.0000	0.0000	0.000	966.7	58.257	232.72	0.6000
B 9=	3 - OB	0.0343	0.0023	0.807	887.0	44.049	213.07	0.5000

	FR - TO	%W(FR)	%W(1)	W	T-R	P	H	DH/DHT
B 1=	6 - 9	0.0577	0.0035	1.229	1278.1	143.204	311.31	1.0000
B 2=	6 - 11	0.0385	0.0024	0.820	1278.1	143.204	373.56	1.0000
B 4=	6 - 15	0.0070	0.0004	0.149	1278.1	145.672	311.31	0.2500
STA	6 TOTL	0.1070	0.0065	2.278				
B 6=	6 - 21	0.0000	0.0000	0.000	1278.1	143.204	311.31	1.0000
B 8=	6 - OB	0.0038	0.0002	0.081	1278.1	143.204	311.31	1.0000

	FR - TO	%W(FR)	%W(1)	W	T-R	P	H	DH/DHT
B10=	22 - OB	0.0000	0.0000	0.000	480.6	6.245	114.82	1.0000
STA	22 TOTL	0.0000	0.0000	0.000				

C O M P O N E N T   P E R F O R M A N C E

N	ID	BETA	XN	XN-MAP	HP	HPX/PHP	SF(N,2)	W-MAP	EFF-MAP	R-MAP	SMRELL	FLOW ID	EFF ID	MAPTYP
1	FAN	1.0166	2427.266	97.072	5211.28	26.19	0.0000	949.483	0.8773	1.4819	21.995	QUIETENG	QUIETENG	1
3	HPC	1.0094	10837.113	99.043	6284.96	100.20	0.0000	86.944	0.8374	21.5393	21.163	0. 0.	0. 0.	1
10	HPT	0.0000	10837.113	100.101	6382.82	72.20	0.0000	1.000	0.8930	4.0676	6.205	JAN.2690	JAN.2690	1
14	LPT	0.0000	2427.266	98.553	5237.77	0.00	0.0000	1.000	0.9242	5.1125	6.509	ANALYTIC	ANALYTIC	1
14	LPT			RNISF(1,14),(2,14),(3,14),(4,14)=				1.00071	1.00167	1.00000	1.00000			

N O Z Z L E   P E R F O R M A N C E

NOZZLE	(N)	TYP	FG	FN	RJ	CFG	CD	AREA(TH)	V-EXIT	SF(TH,2)	SF(EX,2)	CFGT ID	CDT ID	MAPTYP
PRI (8-9)	18	1	1116.84	571.45	1.7928	0.9953	0.9629	294.19	1561.3	0.273	0.000	CFG MDXX	CD MDXX	1
SEC (18-19)	25	1	10196.32	2676.48	1.9876	0.9960	0.9815	2184.86	982.1	2.075	0.000	CFG MDXX	CD MDXX	1

F I N A L   E N G I N E   P E R F O R M A N C E

BPR(1)	RMIX(1)	GAINMX(1)	ANGMIX(1)	BPR(2)	RMIX(2)	GAINMX(2)	ANGMIX(2)
13.7880	1.1087	0.0000	0.0000	0.0000	0.0000	0.0000	0.0000

FG	FRAM	WFE	FARST	EPR	WAENG	WACOR	RCOA	FNR1	FNGF
11313.2	8065.2	1715.0	.06775	1.217	348.064	1013.410	31.64	10310.	1.0000

FN	SFC	WFT	FHV	NODISS	EFFTH	FN/WA	EFFOA	WFTR1	WFTGF
3247.9	0.5280	1715.0	18550.	0	0.3976	9.3314	0.8482	5935.	1.0000

```
WARNING: TABLE(S) EXTRAPOLATED.

NPTOT = 48      NP1 = 16      NP2 = 16      NP3 = 16

FMT1
(/,2F10.0,F10.2,2F10.1,3F10.2,/,F10.1,2F10.3,F10.4,2F10.1,       ,          2F10.2
IPUNCH =   412          1        1385        450       1251       1553        827
          1178        734         122        123        530       1287       1257
           797       1148
 NAMES =  CASE        ALT          XM       DTAMB     V-KTAS   YCOMPD15    PAMB
        T-AMB(R)    HPX(3)     BLD(9)     BLD(10)     ERAM       WD(1)    WCOR(1)
           P(1)       T(1)

      16.      37000.        0.77        0.0       441.7        0.00        3.14      389.97
    100.2        0.034       0.000      0.9950     348.1      1013.4        4.63      436.35

FMT2
(F10.2,4F10.1,F10.2,F10.4,F10.2,/,8F10.2,)
IPUNCH =   314        651         665       1557       1323       1556       1558
           901        895         888       1174       1167         30         23
          1313       1306
 NAMES =  BPR(1)       FG        F-RAM    YCOMPD19     WFT      YCOMPD18  YCOMPD20
          RC-OA       R(25)      R(18)      T(27)      T(20)    AREA(27)  AREA(20)
          WD(27)     WD(20)

    13.79     11313.2      8065.2     3161.1     1715.0       86.81      0.5425      31.64
     1.99        1.79      401.01    1125.80    2184.86      294.19    324.53      23.12

FMT3
(2F10.1,F10.2,4F10.4,F10.1/F10.3,F10.1,6F10.0,)
IPUNCH =  1459       1448        1157        413        416        415        418
           698       1578         274       1554       1554       1554       1554
          1554       1554
 NAMES =  XN(14)     XN(3)       T(10)     CD-18      CFG-19     CD-8       CFG-9
          HP(1)    YCOMPD40   BLDP(9)   YCOMPD16   YCOMPD16   YCOMPD16   YCOMPD16
       YCOMPD16  YCOMPD16

   2427.3     10837.1     2710.28      0.9815      0.9960      0.9629      0.9953      5211.3
    0.995        44.0      99999.      99999.      99999.      99999.      99999.      99999.
```

```
TERMAP (VER 12)  TITLE=  NASA LOW NOISE MODEL (FLOW SCALE DOWN OF MDXX BPR=14 SHORT BYP DUCT MODEL)       DATE= 05-26-92 CASE=  17.0
(CMS  04-06-92) STITLE= 37000 FT, 0.77 MN, FLIGHT IDLE, FAN CORR N=65 PCT                                    TIME= 16:15:20 PAGE=     23
```

ALT	PAMB	TAMBF	TAMBR	DTAMB	DTAMTP	PRELHM	KTAS	KCAS	XM	RPR	DEFF	ERAM	P1	T1R	DEFTIP	ERAMTP	PTIP	TTIPR
37000.	3.142	-69.70	389.97	0.0	0.0	0.0	441.7	249.1	0.770	1.474	0.9950	0.9950	4.630	436.35	0.0000	0.0000	0.000	0.0

(N) ID	NSI	T-R	P	W-COR	W	R	EFF	FAR	AREA	XMN	PS	THETA	DELTA	H	SF-N,1	(N)
1 FAN	220	436.4	4.630	777.394	267.002	1.0809	0.8452	0.00000	0.0	0.000	0.000	0.841	0.315	104.24	1.0191	1
2 DELP	0	448.0	5.004	28.030	10.270	0.9975	0.0000	0.00000	384.3	0.124	4.951	0.864	0.341	107.02	0.2349	2
3 HPC	0	448.0	4.992	28.101	10.270	10.5514	0.8134	0.00000	0.0	0.000	0.000	0.864	0.340	107.02	1.0241	3
4 COOL	0	971.5	52.667	3.557	9.314	0.0000	0.0000	0.00000	0.0	0.000	0.000	1.873	3.584	233.90	0.0000	4
5 DELP	0	971.4	52.667	3.557	9.314	1.0000	0.0000	0.00000	23.7	0.266	50.171	1.873	3.584	233.90	0.0000	5
6 DELP	0	971.4	52.667	3.557	9.314	0.9745	0.0000	0.00000	20.6	0.310	49.313	1.873	3.584	233.90	0.4000	6
7 HX C	0	971.4	51.326	3.259	8.317	1.0000	0.0000	0.00000	26.7	0.213	49.747	1.873	3.492	233.90	0.0000	7
8 BURN	0	961.8	51.326	3.243	8.317	0.9790	0.9990	0.00000	26.5	0.213	49.743	1.854	3.492	231.51	0.6799	8
9 COOL	0	1923.4	50.250	4.751	8.436	0.0000	0.0000	0.01428	0.0	0.000	0.000	3.708	3.419	491.69	0.0000	9
10 HPT	0	1870.3	50.250	5.083	8.974	4.7842	0.8989	0.01341	0.0	0.000	0.000	3.523	3.419	476.25	1.0046	10
11 PWRK	0	1322.3	10.503	20.048	8.974	0.0000	0.0000	0.01341	0.0	0.000	0.000	2.549	0.715	326.88	0.0007	11
12 COOL	0	1316.1	10.503	20.800	9.332	0.0000	0.0000	0.01289	0.0	0.000	0.000	2.537	0.715	325.07	0.0000	12
13 DELP	0	1290.3	10.503	21.774	9.866	0.9971	0.0000	0.01218	196.0	0.195	10.238	2.488	0.715	318.08	0.1163	13
14 LPT	0	1290.3	10.472	22.098	9.866	2.9851	0.9012	0.01218	0.0	0.000	0.000	2.454	0.713	318.08	1.0003	14
15 COOL	0	996.5	3.508	57.288	9.866	0.0000	0.0000	0.01218	0.0	0.000	0.000	1.921	0.239	242.46	0.0000	15
16 DELP	0	996.3	3.508	57.662	9.932	0.9974	0.0000	0.01210	406.6	0.251	3.361	1.921	0.239	242.40	0.0609	16
17 COOL	0	996.3	3.499	57.809	9.932	0.0000	0.0000	0.01210	0.0	0.000	0.000	1.921	0.238	242.41	0.0000	17
18 NOZZ	110	992.7	3.499	58.239	10.024	1.1137	0.0000	0.01199	1.0	0.000	0.000	1.914	0.238	241.45	0.0000	18
19 TH8	0	964.2	3.142	63.926	10.024	1.1137	0.0000	0.01199	294.2	0.397	3.143	1.859	0.214	234.28	1.0000	19
20 EX9	0	964.2	3.142	63.926	10.024	1.0000	0.0000	0.01199	294.2	0.397	3.142	1.859	0.214	234.28	0.0000	20
21 COOL	0	448.0	5.004	700.699	256.732	0.0000	0.0000	0.00000	0.0	0.000	0.000	0.864	0.341	107.02	0.0000	21
22 DELP	0	448.0	5.004	700.700	256.732	0.9967	0.0000	0.00000	3500.0	0.365	4.563	0.864	0.341	107.02	0.0378	22
23 HX H	0	448.0	4.987	703.043	256.732	1.0000	0.0185	0.00000	3500.0	0.367	4.545	0.864	0.339	107.02	0.0000	23
24 DELP	0	448.3	4.987	703.298	256.732	1.0000	0.0000	0.00000	3500.0	0.367	4.544	0.864	0.339	107.09	0.0000	24
25 NOZZ	0	448.3	4.987	703.298	256.732	1.5874	0.0000	0.00000	1.0	0.000	0.000	0.864	0.339	107.10	0.0000	25
26 TH18	0	392.7	3.142	1044.920	256.732	1.5874	0.0000	0.00000	2184.8	0.840	3.142	0.757	0.214	93.80	1.0000	26
27 EX19	0	392.7	3.142	1044.920	256.732	1.0000	0.0000	0.00000	2184.8	0.840	3.142	0.757	0.214	93.80	0.0000	27

```
S 1= RC-OA  =    11.3761 : S 2=EMAP(7) =    -9.6304 : S 3= EFF(23)=     0.0185

Y 1=      0.8469= COMP POLY EFF AT STATION  1                           : Y16=99999.0000=            0.000000 -            0.000000 +99999.0000
Y 2=      0.8635= COMP POLY EFF AT STATION  3                           : Y17=     1.8456=              P(25)   -   PS(26)            +     0.0000
Y 3= 1410.6050=            T(10)    -          459.669922 +     0.0000 : Y18=    54.3358=           YCOMPD17 *           29.440002 +     0.0000
Y 4=   149.3730=           H(10)    -    H(11)            +     0.0000 : Y19=   419.9580=              FN     - YCOMPD18           +     0.0000
Y 5=    42.4000=         YCOMPD 4 / THETA 10              +     0.0000 : Y20=     1.0179=              WFE    / YCOMPD19           +     0.0000
Y 6=    75.6158=           H(14)    -    H(15)            +     0.0000 : Y21=    20.8890=              T(1)   **            0.500000 +     0.0000
Y 7=    30.8128=         YCOMPD 6 / THETA 14              +     0.0000 : Y22=     4.5120=           YCOMPD21 /    P(1)             +     0.0000
Y 8=     0.6291=          RNI(14) /              0.379900 +     0.0000 : Y23= 1204.7114=           YCOMPD22 *    WD(1)            +    -0.0000
Y 9= 3364.5347=          XNMAP 14 *             42.203995 +     0.0000 : Y39=     1.3617=              V-19   /   V-9              +     0.0000
Y10=     1.5665=          THETA 14 **             0.500000 +     0.0000 : Y40=     0.9950=           0.000000 -            0.000000 +     0.9950
Y11= 5270.6641=         YCOMPD 9 * YCOMPD10               +     0.0000 : Y41=     5.2777=              HP(14) *             0.005000 +     0.0000
Y12=    10.0143=           FAR(9)   -              0.000000 +    10.0000 : Y42=     0.3245=              T(24)  -    T(23)          +     0.0000
Y15=     0.0000=         0.000000 -                0.000000 +     0.0000 : Y43= 7297.8242=              XN(1)  *             4.490000 +     0.0000

T 1=  375.0002  X=YCOMPD15 Z=         W=          ID=03/11/91 E=2 : T 3=     0.2297  X=RMAP(14) Z=XNMAP 14 W=           ID=LPT X MN E=1
T 2= 2184.6973  X=  XM      Z=XNMAP  1 W=          ID=BYP AREA E=1 : T 4=     0.9950  X=YCOMPD23 Z=  XM      W=           ID=INLETREC E=1

P 1=YCOMPD41--> HPX(1)   : P 4=YTABLE 4--> DEFF

    --VARY-- ---HI--- ---LO---  (+)   OBJECT = TARGET   (+) LIM
C19= AREA(26)  2817.00  2183.00 1.00  AREA(26) YTABLE 2 0.00 L=1

MODE=XNMAP  1  PLA=    65.000  ADDPLA=     0.000  PLA LIMIT= PLA
IDES=0  NVAR=10  MAX ERR# 9= 19.PS+A/P+A = 0.00017  MATRX= 1  LOOP= 16
IOMT  LOOPS=  1  MAX ERROR =        0.      = 0.00000
```

B L E E D S   A N D   L E A K A G E S

```
      FR - TO %W(FR)  %W(1)       W      T-R      P        H     DH/DHT :       FR - TO %W(FR)  %W(1)       W      T-R      P        H     DH/DHT
B 3=   3 - 12 0.0520 0.0020    0.534  816.5   30.838  195.83 0.7000 : B 7=   3 - OB 0.0000 0.0000    0.000  764.3   25.201  183.15 0.6000
B 5=   3 - 17 0.0090 0.0003    0.092  580.3   10.914  138.74 0.2500 : B 9=   3 - OB 0.0321 0.0012    0.330  712.0   20.298  170.46 0.5000
 STA   3 TOTL 0.0931 0.0036    0.956

      FR - TO %W(FR)  %W(1)       W      T-R      P        H     DH/DHT :       FR - TO %W(FR)  %W(1)       W      T-R      P        H     DH/DHT
B 1=   6 -  9 0.0577 0.0020    0.537  971.4   51.326  233.90 1.0000 : B 6=   6 - 21 0.0000 0.0000    0.000  971.4   51.326  233.90 1.0000
B 2=   6 - 11 0.0385 0.0013    0.359  971.4   51.326  280.00 1.0000 : B 8=   6 - OB 0.0038 0.0001    0.035  971.4   51.326  233.90 1.0000
B 4=   6 - 15 0.0070 0.0002    0.065  971.4   52.332  233.90 0.2500
 STA   6 TOTL 0.1070 0.0037    0.997

      FR - TO %W(FR)  %W(1)       W      T-R      P        H     DH/DHT
B10=  22 - OB 0.0000 0.0000    0.000  448.0    4.987  107.02 1.0000
 STA  22 TOTL 0.0000 0.0000    0.000
```

C O M P O N E N T   P E R F O R M A N C E

```
 N  ID      BETA       XN       XN-MAP      HP     HPX/PHP  SF(N,2)   W-MAP   EFF-MAP    R-MAP    SMRELL    FLOW ID     EFF ID   MAPTYP
 1 FAN     1.2528  1625.351    65.002   1050.37     5.28    0.0000  728.355   0.8294    1.1101    66.479   OUIETENG   OUIETENG     1
 3 HPC     1.0321  9326.816    88.285   1772.90   100.20    0.0000   45.567   0.7943    9.6836    29.759    0.  0.     0.  0.       1
10 HPT     0.0000  9326.816   103.204   1873.13    23.39    0.0000    0.998   0.8948    4.0314     6.295   JAN.2690   JAN.2690     1
14 LPT     0.0000  1625.351    79.721   1055.55     0.00    0.0000    0.986   0.9110    2.9851     5.896   ANALYTIC   ANALYTIC     1
14 LPT                        RNISF(1,14),(2,14),(3,14),(4,14)=  0.99360  0.98892   1.00000   1.00000
```

N O Z Z L E   P E R F O R M A N C E

```
 NOZZLE      (N)  TYP     FG        FN       RJ      CFG      CD     AREA(TH)  V-EXIT  SF(TH,2) SF(EX,2)  CFGT ID    CDT ID  MAPTYP
PRI (8-9)    18    1    185.26   -52.71   1.1137  0.9922  0.9308    294.19   599.3     1.787    0.000   CFG MDXX  CD  MDXX     1
SEC (18-19)  25    1   6475.92   527.01   1.5874  0.9945  0.9602   2184.80   816.1    13.818    0.000   CFG MDXX  CD  MDXX     1
```

F I N A L   E N G I N E   P E R F O R M A N C E

```
 BPR(1) RMIX(1) GAINMX(1) ANGMIX(1)    BPR(2) RMIX(2) GAINMX(2) ANGMIX(2)
24.9986  1.4253  0.0000    0.0000      0.0000  0.0000  0.0000    0.0000

   FG     FRAM     WFE   FARST   EPR    WAENG    WACOR    RCOA    FNR1   FNGF
 6661.2  6186.9   427.5 .06775  0.756  267.002  777.394  11.38   1506. 1.0000

   FN     SFC      WFT    FHV   NODISS   EFFTH    FN/WA  EFFOA   WFTR1  WFTGF
  474.3  0.9013   427.5 18550.    0     0.2373   1.7764 0.8097   1479. 1.0000

WARNING: TABLE(S) EXTRAPOLATED. NON-ZERO NSI(S).

NPTOT = 48      NP1 = 16      NP2 = 16      NP3 = 16

FMT1
(/,2F10.0,F10.2,2F10.1,3F10.2,/,F10.1,2F10.3,F10.4,2F10.1,      ,          2F10.2
IPUNCH =   412         1        1385       450       1251      1553       827
          1178       734        122        123        530      1287      1257
           797      1148
 NAMES =  CASE       ALT         XM       DTAMB     V-KTAS   YCOMPD15   PAMB
        T-AMB(R)   HPX(3)    BLD(9)    BLD(10)     ERAM       WD(1)   WCOR(1)
          P(1)       T(1)


      17.     37000.      0.77        0.0      441.7       0.00       3.14     389.97
    100.2      0.032     0.000     0.9950      267.0      777.4       4.63     436.35


FMT2
(F10.2,4F10.1,F10.2,F10.4,F10.2,/,8F10.2,)
IPUNCH =   314       651        665      1557       1323      1556      1558
           901       895        888      1174       1167        30        23
          1313      1306
 NAMES =  BPR(1)     FG        F-RAM   YCOMPD19    WFT      YCOMPD18  YCOMPD20
          RC-OA     R(25)     R(18)     T(27)      T(20)    AREA(27)  AREA(20)
          WD(27)    WD(20)

    25.00     6661.2     6186.9     420.0      427.5      54.34     1.0179     11.38
     1.59       1.11     392.72    964.19    2184.80     294.19     256.73     10.02

FMT3
(2F10.1,F10.2,4F10.4,F10.1/F10.3,F10.1,6F10.0,)
IPUNCH =  1459      1448       1157       413        416        415        418
           698      1578        274      1554       1554       1554       1554
          1554      1554
 NAMES =  XN(14)    XN(3)      T(10)     CD-18     CFG-19      CD-8      CFG-9
          HP(1)   YCOMPD40  BLDP(9)   YCOMPD16  YCOMPD16  YCOMPD16  YCOMPD16
        YCOMPD16  YCOMPD16

   1625.4     9326.8    1870.27    0.9602     0.9945     0.9308     0.9922     1050.4
    0.995       20.3     99999.    99999.     99999.     99999.     99999.     99999.
```

```
TERMAP (VER 12)  TITLE=  NASA LOW NOISE MODEL (FLOW SCALE DOWN OF MDXX BPR=14 SHORT BYP DUCT MODEL)        DATE= 05-26-92 CASE=  18.0
(CMS  04-06-92) STITLE= 32000 FT, 0.81 MN, FLIGHT IDLE, FAN CORR N=65 PCT                                    TIME= 16:15:20 PAGE=    24
```

ALT	PAMB	TAMBF	TAMBR	DTAMB	DTAMTP	PRELHM	KTAS	KCAS	XM	RPR	DEFF	ERAM	P1	T1R	DEFTIP	ERAMTP	PTIP	TTIPR
32000.	3.981	-55.12	404.55	0.0	0.0	0.0	473.3	295.1	0.810	1.533	0.9950	0.9950	6.102	457.79	0.0000	0.0000	0.000	0.0

(N)	ID	NSI	T-R	P	W-COR	W	R	EFF	FAR	AREA	XMN	PS	THETA	DELTA	H	SF-N.1	(N)
1	FAN	220	457.8	6.102	780.606	344.980	1.0739	0.8386	0.00000	0.0	0.000	0.000	0.883	0.415	109.37	1.0191	1
2	DELP	0	469.0	6.552	27.135	12.723	0.9976	0.0000	0.00000	384.3	0.120	6.487	0.904	0.446	112.06	0.2349	2
3	HPC	0	469.0	6.537	27.199	12.723	10.0562	0.8082	0.00000	0.0	0.000	0.000	0.904	0.445	112.06	1.0241	3
4	COOL	0	1004.3	65.738	3.589	11.538	0.0000	0.0000	0.00000	0.0	0.000	0.000	1.936	4.473	242.05	0.0000	4
5	DELP	0	1004.3	65.738	3.589	11.538	1.0000	0.0000	0.00000	23.7	0.269	62.561	1.936	4.473	242.05	0.0000	5
6	DELP	0	1004.3	65.738	3.589	11.538	0.9740	0.0000	0.00000	20.6	0.313	61.468	1.936	4.473	242.05	0.4000	6
7	HX C	0	1004.3	64.030	3.291	10.304	1.0000	0.0000	0.00000	26.7	0.215	62.020	1.936	4.357	242.05	0.0000	7
8	BURN	0	994.4	64.030	3.275	10.304	0.9786	0.9990	0.00000	26.5	0.216	62.015	1.917	4.357	239.60	0.6799	8
9	COOL	0	1945.0	62.660	4.746	10.450	0.0000	0.0000	0.01417	0.0	0.000	0.000	3.750	4.264	497.73	0.0000	9
10	HPT	0	1892.4	62.660	5.080	11.115	4.7860	0.8996	0.01331	0.0	0.000	0.000	3.564	4.264	482.41	1.0046	10
11	PWRK	0	1338.2	13.092	20.041	11.115	0.0000	0.0000	0.01331	0.0	0.000	0.000	2.580	0.891	331.06	0.0007	11
12	COOL	0	1332.8	13.092	20.800	11.559	0.0000	0.0000	0.01279	0.0	0.000	0.000	2.570	0.891	329.48	0.0000	12
13	DELP	0	1307.7	13.092	21.782	12.221	0.9971	0.0000	0.01209	196.0	0.195	12.761	2.521	0.891	322.63	0.1163	13
14	LPT	0	1307.7	13.054	22.112	12.221	2.9457	0.9074	0.01209	0.0	0.000	0.000	2.486	0.888	322.63	1.0003	14
15	COOL	0	1011.5	4.431	56.596	12.221	0.0000	0.0000	0.01209	0.0	0.000	0.000	1.950	0.302	246.23	0.0000	15
16	DELP	0	1011.5	4.431	56.969	12.301	0.9975	0.0000	0.01201	406.6	0.248	4.250	1.950	0.302	246.20	0.0609	16
17	COOL	0	1011.5	4.420	57.111	12.301	0.0000	0.0000	0.01201	0.0	0.000	0.000	1.950	0.301	246.21	0.0000	17
18	NOZZ	110	1007.8	4.420	57.540	12.416	1.1103	0.0000	0.01190	1.0	0.000	0.000	1.943	0.301	245.27	0.0000	18
19	TH8	0	979.8	3.981	62.994	12.416	1.1103	0.0000	0.01190	294.2	0.392	3.983	1.889	0.271	238.19	1.0000	19
20	EX9	0	979.8	3.981	62.994	12.416	1.0000	0.0000	0.01190	294.2	0.392	3.981	1.889	0.271	238.19	0.0000	20
21	COOL	0	469.0	6.552	708.644	332.257	0.0000	0.0000	0.00000	0.0	0.000	0.000	0.904	0.446	112.06	0.0000	21
22	DELP	0	469.0	6.552	708.644	332.257	0.9966	0.0000	0.00000	3500.0	0.370	5.960	0.904	0.446	112.06	0.0378	22
23	HX H	0	469.0	6.530	711.075	332.257	1.0000	0.0185	0.00000	3500.0	0.372	5.935	0.904	0.444	112.06	0.0000	23
24	DELP	0	469.4	6.530	711.317	332.257	1.0000	0.0000	0.00000	3500.0	0.372	5.935	0.905	0.444	112.14	0.0000	24
25	NOZZ	0	469.4	6.530	711.317	332.257	1.6403	0.0000	0.00000	1.0	0.000	0.000	0.905	0.444	112.14	0.0000	25
26	TH18	0	407.4	3.981	1086.990	332.257	1.6403	0.0000	0.00000	2184.7	0.871	3.981	0.785	0.271	97.30	1.0000	26
27	EX19	0	407.4	3.981	1086.990	332.257	1.0000	0.0000	0.00000	2184.7	0.871	3.981	0.785	0.271	97.30	0.0000	27

```
S 1= RC-OA  =   10.7736 : S 2=EMAP(7) =   -9.8378 : S 3= EFF(23)=    0.0185

Y 1=     0.8403= COMP POLY EFF AT STATION  1                        : Y16=99999.0000=          0.000000 -              0.000000 +99999.0000
Y 2=     0.8588= COMP POLY EFF AT STATION  3                        : Y17=     2.5489=          P(25)   -   PS(26)              +    0.0000
Y 3= 1432.7429=            T(10)   -        459.669922 +    0.0000 : Y18=    75.0401=          YCOMPD17 *          29.440002 +    0.0000
Y 4=  151.3479=            H(10)   -    H(11)          +    0.0000 : Y19=   442.0916=          FN       - YCOMPD18           +    0.0000
Y 5=   42.4693=          YCOMPD 4 / THETA 10           +    0.0000 : Y20=     1.1888=          WFE      / YCOMPD19           +    0.0000
Y 6=   76.3954=            H(14)   -    H(15)          +    0.0000 : Y21=    21.3960=          T(1)     **          0.500000 +    0.0000
Y 7=   30.7256=          YCOMPD 6 / THETA 14           +    0.0000 : Y22=     3.5066=          YCOMPD21 /    P(1)             +    0.0000
Y 8=     0.7724=           RNI(14) /           0.379900 +    0.0000 : Y23=  1209.6899=          YCOMPD22 *    WD(1)            +   -0.0000
Y 9= 3423.6038=          XNMAP 14 *           42.203995 +    0.0000 : Y39=     1.4477=          V-19     /    V-9              +    0.0000
Y10=     1.5768=          THETA 14 **           0.500000 +    0.0000 : Y40=     0.9950=          0.000000 -             0.000000 +    0.9950
Y11= 5398.4219=          YCOMPD 9 * YCOMPD10            +    0.0000 : Y41=     6.6045=          HP(14)   *             0.005000 +    0.0000
Y12=    10.0142=           FAR(9)  -           0.000000 +   10.0000 : Y42=     0.3186=          T(24)    -     T(23)            +    0.0000
Y15=     0.0000=          0.000000 -           0.000000 +    0.0000 : Y43=  7474.7187=          XN(1)    *             4.490000 +    0.0000

T 1=  375.0002  X=YCOMPD15 Z=           W=          ID=03/11/91 E=2 : T 3=     0.2278  X=RMAP(14) Z=XNMAP  14 W=          ID=LPT X MN E=1
T 2= 2184.6985  X=  XM      Z=XNMAP   1 W=          ID=BYP AREA E=1 : T 4=     0.9950  X=YCOMPD23 Z=  XM       W=          ID=INLETREC E=1

P 1=YCOMPD41--> HPX(1)   : P 4=YTABLE 4--> DEFF

     --VARY-- ---HI--- ---LO---  (+)    OBJECT = TARGET    (+) LIM
C19= AREA(26)  2817.00  2183.00 1.00   AREA(26) YTABLE 2 0.00 L=1

MODE=XNMAP  1  PLA=     65.000  ADDPLA=      0.000  PLA LIMIT= PLA
IDES=0  NVAR=10  MAX ERR# 9= 19.PS+A/P+A = 0.00020  MATRX= 2  LOOP= 18
IOMT  LOOPS=  1  MAX ERROR = STA.14.RNIX = 0.00000

                    B L E E D S     A N D     L E A K A G E S

      FR - TO %W(FR)  %W(1)      W     T-R      P        H    DH/DHT :        FR - TO %W(FR)  %W(1)       W     T-R      P        H    DH/DHT
B 3=   3 - 12 0.0520 0.0019    0.662  846.1  38.827   203.05 0.7000 : B 7=   3 - OB 0.0000 0.0000    0.000  792.8   31.843  190.05 0.6000
B 5=   3 - 17 0.0090 0.0003    0.115  604.5  14.023   144.56 0.2500 : B 9=   3 - OB 0.0321 0.0012    0.408  739.2   25.751  177.05 0.5000
 STA   3 TOTL 0.0931 0.0034    1.184

      FR - TO %W(FR)  %W(1)      W     T-R      P        H    DH/DHT :        FR - TO %W(FR)  %W(1)       W     T-R      P        H    DH/DHT
B 1=   6 -  9 0.0577 0.0019    0.666 1004.3  64.030   242.05 1.0000 : B 6=   6 - 21 0.0000 0.0000    0.000 1004.3   64.030  242.05 1.0000
B 2=   6 - 11 0.0385 0.0013    0.444 1004.3  64.030   289.72 1.0000 : B 8=   6 - OB 0.0038 0.0001    0.044 1004.3   64.030  242.05 1.0000
B 4=   6 - 15 0.0070 0.0002    0.081 1004.3  65.311   242.05 0.2500
 STA   6 TOTL 0.1070 0.0036    1.235

      FR - TO %W(FR)  %W(1)      W     T-R      P        H    DH/DHT
B10=  22 - OB 0.0000 0.0000    0.000  469.0   6.530   112.06 1.0000
 STA  22 TOTL 0.0000 0.0000    0.000
```

C O M P O N E N T   P E R F O R M A N C E

N	ID	BETA	XN	XN-MAP	HP	HPX/PHP	SF(N,2)	W-MAP	EFF-MAP	R-MAP	SMRELL	FLOW ID	EFF ID	MAPTYP
1	FAN	1.2768	1664.748	65.000	1314.25	6.60	0.0000	731.365	0.8229	1.1006	68.621	QUIETENG	QUIETENG	1
3	HPC	1.0356	9484.258	87.736	2249.95	100.20	0.0000	44.105	0.7892	9.2334	31.203	0. 0.	0. 0.	1
10	HPT	0.0000	9484.258	104.345	2350.20	29.96	0.0000	0.998	0.8955	4.0328	6.328	JAN.2690	JAN.2690	1
14	LPT	0.0000	1664.748	81.120	1320.90	0.00	0.0000	0.984	0.9127	2.9457	5.947	ANALYTIC	ANALYTIC	1
14	LPT			RNISF(1,14),(2,14),(3,14),(4,14)=				0.99656	0.99393	1.00000	1.00000			

N O Z Z L E   P E R F O R M A N C E

NOZZLE	(N)	TYP	FG	FN	RJ	CFG	CD	AREA(TH)	V-EXIT	SF(TH,2)	SF(EX,2)	CFGT ID	CDT ID	MAPTYP
PRI (8-9)	18	1	227.96	-87.90	1.1103	0.9922	0.9306	294.19	595.4	2.076	0.000	CFG MDXX	CD MDXX	1
SEC (18-19)	25	1	8853.96	605.04	1.6403	0.9947	0.9632	2184.74	861.9	16.102	0.000	CFG MDXX	CD MDXX	1

F I N A L   E N G I N E   P E R F O R M A N C E

BPR(1)	RMIX(1)	GAINMX(1)	ANGMIX(1)	BPR(2)	RMIX(2)	GAINMX(2)	ANGMIX(2)
26.1152	1.4773	0.0000	0.0000	0.0000	0.0000	0.0000	0.0000

FG	FRAM	WFE	FARST	EPR	WAENG	WACOR	RCOA	FNR1	FNGF
9081.9	8564.8	525.6	.06775	0.724	344.980	780.606	10.77	1246.	1.0000

FN	SFC	WFT	FHV	NODISS	EFFTH	FN/WA	EFFOA	WFTR1	WFTGF
517.1	1.0163	525.6	18550.	0	0.2295	1.4990	0.8047	1347.	1.0000

```
WARNING: TABLE(S) EXTRAPOLATED. NON-ZERO NSI(S).

NPTOT = 48      NP1 = 16      NP2 = 16      NP3 = 16

FMT1
(/,2F10.0,F10.2,2F10.1,3F10.2,/,F10.1,2F10.3,F10.4,2F10.1,        ,          2F10.2
IPUNCH =    412          1       1385        450       1251       1553        827
           1178        734        122        123        530       1287       1257
            797       1148
 NAMES =  CASE       ALT         XM       DTAMB     V-KTAS   YCOMPD15   PAMB
        T-AMB(R)   HPX(3)    BLD(9)    BLD(10)     ERAM       WD(1)    WCOR(1)
           P(1)       T(1)


      18.     32000.       0.81        0.0      473.3       0.00       3.98     404.55
   100.2       0.032      0.000     0.9950      345.0      780.6       6.10     457.79


FMT2
(F10.2,4F10.1,F10.2,F10.4,F10.2,/,8F10.2,)
IPUNCH =    314        651        665       1557       1323       1556       1558
            901        895        888       1174       1167         30         23
           1313       1306
 NAMES =  BPR(1)      FG        F-RAM   YCOMPD19     WFT      YCOMPD18 YCOMPD20
          RC-OA      R(25)      R(18)      T(27)      T(20)   AREA(27) AREA(20)
          WD(27)     WD(20)

    26.12     9081.9     8564.8      442.1      525.6      75.04     1.1888      10.77
     1.64       1.11     407.38     979.80    2184.74     294.19     332.26      12.42

FMT3
(2F10.1,F10.2,4F10.4,F10.1/F10.3,F10.1,6F10.0,)
IPUNCH =   1459       1448       1157        413        416        415        418
            698       1578        274       1554       1554       1554       1554
           1554       1554
 NAMES =  XN(14)     XN(3)      T(10)     CD-18     CFG-19     CD-8       CFG-9
          HP(1)   YCOMPD40  BLDP(9)  YCOMPD16  YCOMPD16  YCOMPD16  YCOMPD16
        YCOMPD16  YCOMPD16

   1664.7     9484.3    1892.41     0.9632     0.9947     0.9306     0.9922     1314.3
    0.995       25.8     99999.     99999.     99999.     99999.     99999.     99999.
```

```
TERMAP (VER 12)  TITLE=  NASA LOW NOISE MODEL (FLOW SCALE DOWN OF MDXX BPR=14 SHORT BYP DUCT MODEL)        DATE= 05-26-92 CASE=  19.0
(CMS  04-06-92) STITLE= 29000 FT, 0.81 MN, FLIGHT IDLE, FAN CORR N=65 PCT                                   TIME= 16:15:20 PAGE=    25

   ALT    PAMB   TAMBF  TAMBR   DTAMS DTAMTP PRELHM  KTAS    KCAS    XM      RPR   DEFF    ERAM     P1     T1R    DEFTIP ERAMTP  PTIP  TTIPR
 29000.  4.566 -44.42 415.25    0.0    0.0    0.0  479.5   315.0  0.810  1.533 0.9950 0.9950  6.999 469.89 0.0000 0.0000  0.000   0.0

(N) ID     NSI     T-R       P       W-COR       W        R        EFF       FAR       AREA    XMN       PS     THETA  DELTA     H      SF-N,1   (N)
--- --     ---     ---       -       -----       -        -        ---       ---       ----    ---       --     -----  -----     -      ------   ---
 1 FAN     220    469.9    6.999   780.730  390.624  1.0736   0.8384  0.00000      0.0  0.000     0.000  0.906  0.476   112.27  1.0191     1
 2 DELP      0    481.4    7.514    27.176   14.423  0.9976   0.0000  0.00000    384.3  0.120     7.438  0.928  0.511   115.02  0.2349     2
 3 HPC       0    481.4    7.496    27.240   14.422 10.0402   0.8081  0.00000      0.0  0.000     0.000  0.928  0.510   115.02  1.0241     3
 4 COOL      0   1029.4   75.261     3.598   13.080  0.0000   0.0000  0.00000      0.0  0.000     0.000  1.985  5.121   248.31  0.0000     4
 5 DELP      0   1029.4   75.261     3.598   13.080  1.0000   0.0000  0.00000     23.7  0.270    71.605  1.985  5.121   248.31  0.0000     5
 6 DELP      0   1029.4   75.261     3.598   13.080  0.9739   0.0000  0.00000     20.6  0.314    70.346  1.985  5.121   248.31  0.4000     6
 7 HX C      0   1029.4   73.295     3.299   11.680  1.0000   0.0000  0.00000     26.7  0.216    70.982  1.985  4.987   248.31  0.0000     7
 8 BURN      0   1019.4   73.295     3.283   11.680  0.9785   0.9990  0.00000     26.5  0.216    70.976  1.965  4.987   245.80  0.6799     8
 9 COOL      0   1979.1   71.718     4.742   11.848  0.0000   0.0000  0.01437      0.0  0.000     0.000  3.816  4.880   507.49  0.0000     9
10 HPT       0   1926.0   71.718     5.079   12.603  4.7898   0.8999  0.01350      0.0  0.000     0.000  3.625  4.880   491.97  1.0046    10
11 PWRK      0   1363.1   14.973    20.053   12.603  0.0000   0.0000  0.01350      0.0  0.000     0.000  2.628  1.019   337.72  0.0007    11
12 COOL      0   1357.9   14.973    20.814   13.106  0.0000   0.0000  0.01297      0.0  0.000     0.000  2.618  1.019   336.17  0.0000    12
13 DELP      0   1332.6   14.973    21.799   13.856  0.9971   0.0000  0.01226    196.0  0.195    14.594  2.569  1.019   329.25  0.1163    13
14 LPT       0   1332.6   14.929    22.139   13.856  2.9410   0.9102  0.01226      0.0  0.000     0.000  2.533  1.016   329.24  1.0003    14
15 COOL      0   1030.9    5.076    56.553   13.856  0.0000   0.0000  0.01226      0.0  0.000     0.000  1.988  0.345   251.17  0.0000    15
16 DELP      0   1030.9    5.076    56.926   13.948  0.9975   0.0000  0.01218    406.6  0.247     4.869  1.988  0.345   251.15  0.0609    16
17 COOL      0   1030.9    5.064    57.068   13.948  0.0000   0.0000  0.01218      0.0  0.000     0.000  1.988  0.345   251.15  0.0000    17
18 NOZZ    110   1027.2    5.064    57.497   14.077  1.1089   0.0000  0.01207      1.0  0.000     0.000  1.980  0.345   250.21  0.0000    18
19  TH8      0    998.8    4.566    62.869   14.077  1.1089   0.0000  0.01207    294.2  0.391     4.570  1.926  0.311   243.02  1.0000    19
20  EX9      0    998.8    4.566    62.869   14.077  1.0000   0.0000  0.01207    294.2  0.391     4.566  1.926  0.311   243.02  0.0000    20
--- --     ---     ---       -       -----       -        -        ---       ---       ----    ---       --     -----  -----     -      ------   ---
21 COOL      0    481.4    7.514   708.876  376.201  0.0000   0.0000  0.00000      0.0  0.000     0.000  0.928  0.511   115.02  0.0000    21
22 DELP      0    481.4    7.514   708.875  376.201  0.9966   0.0000  0.00000   3500.0  0.370     6.834  0.928  0.511   115.02  0.0378    22
23 HX H      0    481.4    7.488   711.309  376.201  1.0000   0.0185  0.00000   3500.0  0.372     6.806  0.928  0.510   115.02  0.0000    23
24 DELP      0    481.7    7.488   711.551  376.201  1.0000   0.0000  0.00000   3500.0  0.372     6.805  0.929  0.510   115.10  0.0000    24
25 NOZZ      0    481.7    7.488   711.551  376.201  1.6398   0.0000  0.00000      1.0  0.000     0.000  0.929  0.510   115.10  0.0000    25
26 TH18      0    418.1    4.566  1086.965  376.201  1.6398   0.0000  0.00000   2184.8  0.871     4.564  0.806  0.311    99.86  1.0000    26
27 EX19      0    418.1    4.566  1086.965  376.201  1.0000   0.0000  0.00000   2184.8  0.871     4.566  0.806  0.311    99.86  0.0000    27
--- --     ---     ---       -       -----       -        -        ---       ---       ----    ---       --     -----  -----     -      ------   ---

S 1= RC-OA   =    10.7537 : S 2=EMAP(7) =   -10.0698 : S 3= EFF(23)=     0.0185

Y 1=      0.8400= COMP POLY EFF AT STATION  1                       : Y16=99999.0000=            0.000000 -              0.000000 +99999.0000
Y 2=      0.8587= COMP POLY EFF AT STATION  3                       : Y17=     2.9239=            P(25)  -   PS(26)               +     0.0000
Y 3= 1466.3154=             T(10)   -          459.669922 +   0.0000 : Y18=    86.0804=           YCOMPD17 *             29.440002 +     0.0000
Y 4=  154.2534=             H(10)   -    H(11)            +   0.0000 : Y19=   509.6807=            FN      - YCOMPD18            +     0.0000
Y 5=   42.5503=           YCOMPD 4 / THETA 10             +   0.0000 : Y20=     1.1857=            WFE     / YCOMPD19            +     0.0000
Y 6=   78.0686=             H(14)   -    H(15)            +   0.0000 : Y21=    21.6769=             T(1)   **             0.500000 +     0.0000
Y 7=   30.8264=           YCOMPD 6 / THETA 14             +   0.0000 : Y22=     3.0973=           YCOMPD21 /    P(1)                +     0.0000
Y 8=    0.8647=             RNI(14) /              0.379900 +   0.0000 : Y23= 1209.8809=           YCOMPD22 *   WD(1)                +    -0.0000
Y 9= 3436.8125=           XNMAP 14 *             42.203995 +   0.0000 : Y39=     1.4565=            V-19    /   V-9                  +     0.0000
Y10=    1.5914=           THETA 14 **             0.500000 +   0.0000 : Y40=     0.9950=           0.000000 -              0.000000 +     0.9950
Y11= 5469.3047=           YCOMPD 9 * YCOMPD10             +   0.0000 : Y41=     7.6524=            HP(14)  *              0.005000 +     0.0000
Y12=   10.0144=             FAR(9)  -              0.000000 +  10.0000 : Y42=     0.3274=            T(24)  -    T(23)               +     0.0000
Y15=    0.0000=           0.000000 -               0.000000 +   0.0000 : Y43= 7572.8633=            XN(1)   *              4.490000 +     0.0000

T 1=   375.0002  X=YCOMPD15 Z=           W=          ID=03/11/91 E=2 : T 3=      0.2277  X=RMAP(14) Z=XNMAP  14 W=          ID=LPT X MN E=1
T 2=  2184.6985  X=  XM      Z=XNMAP   1 W=          ID=BYP AREA E=1 : T 4=      0.9950  X=YCOMPD23 Z=   XM      W=          ID=INLETREC E=1

P 1=YCOMPD41--> HPX(1)   : P 4=YTABLE 4--> DEFF

    --VARY-- ---HI--- ---LO---  (+)   OBJECT = TARGET    (+) LIM
C19= AREA(26)  2817.00  2183.00 1.00  AREA(26) YTABLE 2 0.00 L=1

MODE=XNMAP  1  PLA=      65.000  ADDPLA=      0.000  PLA LIMIT= PLA
IDES=0  NVAR=10  MAX ERR# 9= 19.PS+A/P+A = 0.00038  MATRX= 1  LOOP= 16
IOMT  LOOPS=  1  MAX ERROR = STA.14.RNIX = 0.00000

                      B L E E D S    A N D    L E A K A G E S
                      ---------------------------------------
      FR - TO %W(FR)  %W(1)      W     T-R      P       H    DH/DHT :       FR - TO %W(FR)  %W(1)      W     T-R      P       H    DH/DHT
B 3=   3 - 12 0.0520 0.0019   0.750  867.6  44.464  208.32 0.7000 : B 7=   3 - OB 0.0000 0.0000   0.000  813.1  36.470  195.00 0.6000
B 5=   3 - 17 0.0090 0.0003   0.130  620.3  16.069  148.34 0.2500 : B 9=   3 - OB 0.0321 0.0012   0.463  758.2  29.497  181.67 0.5000
 STA   3 TOTL 0.0931 0.0034   1.343

      FR - TO %W(FR)  %W(1)      W     T-R      P       H    DH/DHT :       FR - TO %W(FR)  %W(1)      W     T-R      P       H    DH/DHT
B 1=   6 -  9 0.0577 0.0019   0.755 1029.4  73.295  248.31 1.0000 : B 6=   6 - 21 0.0000 0.0000   0.000 1029.4  73.295  248.31 1.0000
B 2=   6 - 11 0.0385 0.0013   0.504 1029.4  73.295  297.27 1.0000 : B 8=   6 - OB 0.0038 0.0001   0.050 1029.4  73.295  248.31 1.0000
B 4=   6 - 15 0.0070 0.0002   0.092 1029.4  74.770  248.31 0.2500
 STA   6 TOTL 0.1070 0.0036   1.400

      FR - TO %W(FR)  %W(1)      W     T-R      P       H    DH/DHT
B10=  22 - OB 0.0000 0.0000   0.000  481.4   7.488  115.02 1.0000
 STA  22 TOTL 0.0000 0.0000   0.000

                     C O M P O N E N T    P E R F O R M A N C E
                     -------------------------------------------
  N  ID        BETA       XN       XN-MAP      HP     HPX/PHP  SF(N,2)    W-MAP   EFF-MAP    R-MAP    SMRELL    FLOW ID     EFF ID   MAPTYP
  1 FAN      1.2777  1686.607    65.000   1522.94     7.65    0.0000   731.480   0.8227   1.1002   68.703   QUIETENG   QUIETENG      1
  3 HPC      1.0370  9611.148    87.761   2615.39   100.20    0.0000    44.172   0.7891   9.2188   31.634    0.   0.    0.   0.      1
 10 HPT      0.0000  9611.148   104.840   2715.60    34.88    0.0000     0.998   0.8958   4.0359    6.342   JAN.2690   JAN.2690      1
 14 LPT      0.0000  1686.607    81.433   1530.47     0.00    0.0000     0.983   0.9130   2.9410    5.958   ANALYTIC   ANALYTIC      1
 14 LPT                          RNISF(1,14),(2,14),(3,14),(4,14)=     0.99814   0.99668  1.00000  1.00000

                        N O Z Z L E    P E R F O R M A N C E
                        ------------------------------------
  NOZZLE      (N)  TYP      FG        FN        RJ      CFG      CD     AREA(TH)  V-EXIT  SF(TH,2) SF(EX,2)   CFGT ID    CDT ID  MAPTYP
PRI (8-9)     18    1     260.38   -102.40   1.1089  0.9922  0.9306    294.19    599.8     2.085    0.000   CFG MDXX  CD  MDXX     1
SEC (18-19)   25    1   10160.77    698.16   1.6398  0.9947  0.9632   2184.80    873.6    16.050    0.000   CFG MDXX  CD  MDXX     1

                 F I N A L    E N G I N E    P E R F O R M A N C E
                 -------------------------------------------------
  BPR(1) RMIX(1) GAINMX(1) ANGMIX(1)     BPR(2) RMIX(2) GAINMX(2) ANGMIX(2)
 26.0842  1.4788  0.0000    0.0000       0.0000  0.0000  0.0000     0.0000

    FG      FRAM     WFE   FARST   EPR     WAENG    WACOR   RCOA    FNR1   FNGF
 10421.1  9825.4   604.3 .06775  0.724  390.624  780.730  10.75    1251. 1.0000

    FN      SFC      WFT    FHV   NODISS   EFFTH    FN/WA  EFFOA   WFTR1  WFTGF
   595.8  1.0144   604.3 18550.    0     0.2330   1.5252 0.8046    1333. 1.0000

WARNING: TABLE(S) EXTRAPOLATED. NON-ZERO NSI(S).

NPTOT = 48      NP1 = 16      NP2 = 16      NP3 = 16

FMT1
(/,2F10.0,F10.2,2F10.1,3F10.2,/,F10.1,2F10.3,F10.4,2F10.1,      ,          2F10.2
IPUNCH =    412         1      1385       450      1251      1553       827
           1178       734       122       123       530      1287      1257
            797      1148
 NAMES =  CASE      ALT        XM       DTAMB     V-KTAS   YCOMPD15   PAMB
         T-AMB(R)  HPX(3)   BLD(9)    BLD(10)    ERAM      WD(1)    WCOR(1)
           P(1)     T(1)


      19.    29000.      0.81       0.0       479.5      0.00       4.57    415.25
    100.2     0.032     0.000    0.9950       390.6     780.7       7.00    469.89


FMT2
(F10.2,4F10.1,F10.2,F10.4,F10.2,/,8F10.2,)
IPUNCH =    314       651       665      1557      1323      1556      1558
            901       895       888      1174      1167        30        23
           1313      1306
 NAMES =  BPR(1)    FG        F-RAM   YCOMPD19   WFT      YCOMPD18  YCOMPD20
          RC-OA     R(25)     R(18)     T(27)     T(20)   AREA(27)  AREA(20)
          WD(27)    WD(20)

    26.08   10421.1    9825.4     509.7     604.3     86.08    1.1857     10.75
     1.64      1.11    418.06    998.82   2184.80    294.19    376.20     14.08

FMT3
(2F10.1,F10.2,4F10.4,F10.1/F10.3,F10.1,6F10.0,)
IPUNCH =   1459      1448      1157       413       416       415       418
            698      1578       274      1554      1554      1554      1554
           1554      1554
 NAMES =  XN(14)    XN(3)     T(10)    CD-18     CFG-19    CD-8      CFG-9
           HP(1)   YCOMPD40  BLDP(9)  YCOMPD16  YCOMPD16  YCOMPD16  YCOMPD16
        YCOMPD16  YCOMPD16

   1686.6    9611.1   1925.99    0.9632    0.9947    0.9306    0.9922    1522.9
    0.995      29.5    99999.    99999.    99999.    99999.    99999.    99999.
```

```
TERMAP (VER 12)  TITLE=  NASA LOW NOISE MODEL (FLOW SCALE DOWN OF MDXX BPR=14 SHORT BYP DUCT MODEL)        DATE= 05-26-92 CASE=  20.0
(CMS  04-06-92) STITLE= 20000 FT, 0.67 MN, FLIGHT IDLE, FAN CORR N=60 PCT                                   TIME= 16:15:20 PAGE=    26

   ALT    PAMB   TAMBF  TAMBR   DTAMB DTAMTP PRELHM  KTAS    KCAS    XM      RPR   DEFF    ERAM     PI     TIR   DEFTIP ERAMTP   PTIP  TTIPR
 20000.  6.753 -12.32 447.35    0.0    0.0    0.0  411.7   309.3  0.670  1.345 0.9950 0.9950  9.081 487.61 0.0000 0.0000  0.000    0.0

(N) ID    NSI    T-R        P       W-COR       W         R        EFF      FAR       AREA    XMN       PS     THETA  DELTA     H     SF-N,1  (N)
--- --    ---    ---        -       -----       -         -        ---      ---       ----    ---       --     -----  -----     -     ------  ---
  1 FAN     0   487.6     9.081   737.093   469.728   1.0748   0.8331   0.00000     0.0   0.000     0.000   0.940  0.618  116.51  1.0191    1
  2 DELP    0   499.8   - 9.760    27.925    18.892   0.9975   0.0000   0.00000   384.3   0.124     9.656   0.964  0.664  119.43  0.2349    2
  3 HPC     0   499.8     9.735    27.995    18.892  10.3512   0.8117   0.00000     0.0   0.000     0.000   0.964  0.662  119.43  1.0241    3
  4 COOL    0  1074.7   100.772     3.597    17.133   0.0000   0.0000   0.00000     0.0   0.000     0.000   2.072  6.857  259.64  0.0000    4
  5 DELP    0  1074.7   100.772     3.597    17.133   1.0000   0.0000   0.00000    23.7   0.270    95.881   2.072  6.857  259.63  0.0000    5
  6 DELP    0  1074.7   100.772     3.597    17.133   0.9739   0.0000   0.00000    20.6   0.315    94.196   2.072  6.857  259.63  0.4000    6
  7 HX C    0  1074.7    98.142     3.298    15.300   1.0000   0.0000   0.00000    26.7   0.216    95.047   2.072  6.678  259.63  0.0000    7
  8 BURN    0  1064.1    98.142     3.282    15.300   0.9785   0.9990   0.00000    26.5   0.216    95.040   2.052  6.678  256.98  0.6799    8
  9 COOL    0  2060.2    96.033     4.737    15.530   0.0000   0.0000   0.01507     0.0   0.000     0.000   3.972  6.535  531.05  0.0000    9
 10 HPT     0  2005.3    96.033     5.078    16.519   4.7684   0.9002   0.01416     0.0   0.000     0.000   3.770  6.535  514.81  1.0046   10
 11 PWRK    0  1424.5    20.139    19.976    16.519   0.0000   0.0000   0.01416     0.0   0.000     0.000   2.746  1.370  354.28  0.0007   11
 12 COOL    0  1419.0    20.139    20.734    17.179   0.0000   0.0000   0.01361     0.0   0.000     0.000   2.736  1.370  352.62  0.0000   12
 13 DELP    0  1392.5    20.139    21.715    18.161   0.9971   0.0000   0.01286   196.0   0.195    19.633   2.685  1.370  345.32  0.1163   13
 14 LPT     0  1392.5    20.081    22.075    18.161   2.7163   0.9060   0.01286     0.0   0.000     0.000   2.643  1.366  345.31  1.0003   14
 15 COOL    0  1101.5     7.393    52.613    18.161   0.0000   0.0000   0.01286     0.0   0.000     0.000   2.124  0.503  269.31  0.0000   15
 16 DELP    0  1101.3     7.393    52.956    18.281   0.9979   0.0000   0.01277   406.6   0.229     7.133   2.123  0.503  269.24  0.0609   16
 17 COOL    0  1101.3     7.377    53.070    18.281   0.0000   0.0000   0.01277     0.0   0.000     0.000   2.123  0.502  269.24  0.0000   17
 18 NOZZ  110  1097.4     7.377    53.466    18.451   1.0923   0.0000   0.01266     1.0   0.000     0.000   2.116  0.502  268.19  0.0000   18
 19   TH8   0  1071.8     6.753    57.717    18.451   1.0923   0.0000   0.01266   294.2   0.360     6.753   2.066  0.460  261.67  1.0000   19
 20   EX9   0  1071.8     6.753    57.717    18.451   1.0000   0.0000   0.01266   294.2   0.360     6.753   2.066  0.460  261.67  0.0000   20
--- --    ---    ---        -       -----       -         -        ---      ---       ----    ---       --     -----  -----     -     ------  ---
 21 COOL    0   499.8     9.760   666.414   450.836   0.0000   0.0000   0.00000     0.0   0.000     0.000   0.964  0.664  119.43  0.0000   21
 22 DELP    0   499.8     9.760   666.414   450.836   0.9970   0.0000   0.00000  3500.0   0.344     8.990   0.964  0.664  119.43  0.0378   22
 23 HX H    0   499.8     9.731   668.407   450.836   1.0000   0.0185   0.00000  3500.0   0.346     8.958   0.964  0.662  119.43  0.0000   23
 24 DELP    0   500.2     9.731   668.659   450.836   1.0000   0.0000   0.00000  3500.0   0.346     8.958   0.964  0.662  119.52  0.0000   24
 25 NOZZ    0   500.2     9.731   668.659   450.836   1.4408   0.0000   0.00000     1.0   0.000     0.000   0.964  0.662  119.52  0.0000   25
 26 TH18    0   450.5     6.753   914.357   450.836   1.4408   0.0000   0.00000  2184.7   0.741     6.753   0.869  0.460  107.63  1.0000   26
 27 EX19    0   450.5     6.753   914.357   450.836   1.0000   0.0000   0.00000  2184.7   0.741     6.753   0.869  0.460  107.63  0.0000   27
--- --    ---    ---        -       -----       -         -        ---      ---       ----    ---       --     -----  -----     -     ------  ---

S 1= RC-OA  =    11.0975 : S 2=EMAP(7) =  -10.5695 : S 3= EFF(23)=     0.0185

Y 1=     0.8348= COMP POLY EFF AT STATION  1                    : Y16=99999.0000=          0.000000 -               0.000000 +99999.0000
Y 2=     0.8619= COMP POLY EFF AT STATION  3                    : Y17=     2.9771=          P(25)   -    PS(26)               +     0.0000
Y 3= 1545.5972=          T(10)    -        459.669922 +    0.0000 : Y18=    87.6457=         YCOMPD17 *              29.440002 +     0.0000
Y 4=  160.5266=          H(10)    -    H(11)             +    0.0000 : Y19=   839.8809=          FN      - YCOMPD18               +     0.0000
Y 5=   42.5753=        YCOMPD 4 / THETA 10              +    0.0000 : Y20=     0.9884=          WFE     / YCOMPD19               +     0.0000
Y 6=   75.9995=          H(14)    -    H(15)             +    0.0000 : Y21=    22.0818=          T(1)    **              0.500000 +     0.0000
Y 7=   28.7536=        YCOMPD 6 / THETA 14              +    0.0000 : Y22=     2.4317=         YCOMPD21 /    P(1)                 +     0.0000
Y 8=    1.1068=         RNI(14) /             0.379900 +    0.0000 : Y23= 1142.2598=         YCOMPD22 *   WD(1)                 +    -0.0000
Y 9= 3163.3630=        XNMAP 14 *            42.203995 +    0.0000 : Y39=     1.3505=          V-19    /   V-9                   +     0.0000
Y10=    1.6258=        THETA 14 **            0.500000 +    0.0000 : Y40=     0.9950=         0.000000 -               0.000000 +     0.9950
Y11= 5142.9023=        YCOMPD 9 * YCOMPD10              +    0.0000 : Y41=     9.7640=          HP(14)  *               0.005000 +     0.0000
Y12=   10.0151=         FAR(9)   -             0.000000 +   10.0000 : Y42=     0.3772=          T(24)   -    T(23)                +     0.0000
Y15=    0.0000=        0.000000 -             0.000000 +    0.0000 : Y43= 7120.9180=          XN(1)   *               4.490000 +     0.0000

T 1=  375.0002  X=YCOMPD15 Z=          W=          ID=03/11/91 E=2 : T 3=     0.2036   X=RMAP(14) Z=XNMAP 14 W=          ID=LPT X MN E=1
T 2= 2184.6973  X=  XM      Z=XNMAP  1 W=          ID=BYP AREA E=1 : T 4=     0.9950   X=YCOMPD23 Z=  XM      W=          ID=INLETREC E=1

P 1=YCOMPD41--> HPX(1)   : P 4=YTABLE 4--> DEFF

     --VARY-- ---HI--- ---LO---  (+)   OBJECT = TARGET   (+) LIM
C19= AREA(26)  2817.00  2183.00 1.00  AREA(26) YTABLE 2 0.00 L=1

MODE=XNMAP  1  PLA=     60.000  ADDPLA=     0.000  PLA LIMIT= PLA
IDES=0  NVAR=10  MAX ERR# 8= 14.HP+10*WD = 0.00014  MATRX= 0  LOOP= 23
IOMT  LOOPS=  1  MAX ERROR =        0.      = 0.00000

                 B L E E D S    A N D    L E A K A G E S
                 ---------------------------------------
      FR - TO %W(FR)  %W(1)       W      T-R      P        H    DH/DHT :        FR - TO %W(FR)  %W(1)       W      T-R      P        H    DH/DHT
B 3=   3 - 12 0.0520 0.0021     0.982  905.3   59.201   217.57 0.7000 : B 7=   3 - OB 0.0000 0.0000     0.000  848.1   48.447   203.55 0.6000
B 5=   3 - 17 0.0090 0.0004     0.170  645.8   21.121   154.48 0.2500 : B 9=   3 - OB 0.0321 0.0013     0.606  790.6   39.083   189.53 0.5000
 STA   3 TOTL 0.0931 0.0037     1.759

      FR - TO %W(FR)  %W(1)       W      T-R      P        H    DH/DHT :        FR - TO %W(FR)  %W(1)       W      T-R      P        H    DH/DHT
B 1=   6 -  9 0.0577 0.0021     0.989 1074.7   98.142   259.63 1.0000 : B 6=   6 - 21 0.0000 0.0000     0.000 1074.7   98.142   259.63 1.0000
B 2=   6 - 11 0.0385 0.0014     0.660 1074.7   98.142   310.99 1.0000 : B 8=   6 - OB 0.0038 0.0001     0.065 1074.7   98.142   259.63 1.0000
B 4=   6 - 15 0.0070 0.0003     0.120 1074.7  100.114   259.63 0.2500
 STA   6 TOTL 0.1070 0.0039     1.833

      FR - TO %W(FR)  %W(1)       W      T-R      P        H    DH/DHT
B10=  22 - OB 0.0000 0.0000     0.000  499.8    9.731   119.43 1.0000
 STA  22 TOTL 0.0000 0.0000     0.000

                C O M P O N E N T    P E R F O R M A N C E
                ------------------------------------------
  N  ID        BETA       XN       XN-MAP       HP      HPX/PHP  SF(N,2)     W-MAP   EFF-MAP    R-MAP    SMRELL   FLOW ID     EFF ID   MAPTYP
  1 FAN       1.2071   1585.951    60.000    1942.73      9.76    0.0000   690.597   0.8175    1.1018    69.229  QUIETENG   QUIETENG      1
  3 HPC       1.0384   9844.344    88.219    3603.56    100.20    0.0000    45.395   0.7926    9.5016    31.684   0.  0.     0.  0.        1
 10 HPT       0.0000   9844.344   105.296    3703.89     47.93    0.0000     0.997   0.8961    4.0187     6.355  JAN.2690   JAN.2690      1
 14 LPT       0.0000   1585.951    74.954    1952.80      0.00    0.0000     0.978   0.9045    2.7163     5.725  ANALYTIC   ANALYTIC      1
 14 LPT                           RNISF(1,14),(2,14),(3,14),(4,14)=   1.00059   1.00139   1.00000   1.00000

                     N O Z Z L E    P E R F O R M A N C E
                     ------------------------------------
  NOZZLE       (N)  TYP      FG         FN        RJ     CFG      CD     AREA(TH)  V-EXIT  SF(TH,2) SF(EX,2)   CFGT ID    CDT ID   MAPTYP
PRI (8-9)      18    1     325.10     -82.87   1.0923  0.9921  0.9298    294.19    571.4     1.962    0.000   CFG MDXX   CD  MDXX     1
SEC (18-19)    25    1   10746.07    1010.39   1.4408  0.9938  0.9517   2184.70    771.7    15.047    0.000   CFG MDXX   CD  MDXX     1

             F I N A L    E N G I N E    P E R F O R M A N C E
             -------------------------------------------------
  EPR(1) RMIX(1) GAINMX(1) ANGMIX(1)     BPR(2) RMIX(2) GAINMX(2) ANGMIX(2)
 23.8642  1.3191  0.0000    0.0000       0.0000  0.0000  0.0000    0.0000

    FG      FRAM     WFE   FARST    EPR     WAENG    WACOR    RCOA    FNR1   FNGF
 11071.2 10143.6   830.1 .06775  0.812  469.728  737.093   11.10    1501. 1.0000

    FN     SFC      WFT    FHV    NODISS   EFFTH     FN/WA  EFFOA    WFTR1  WFTGF
   927.5  0.8950   830.1 18550.    0      0.2228    1.9746 0.8078    1386. 1.0000

WARNING: TABLE(S) EXTRAPOLATED. NON-ZERO NSI(S).

NPTOT = 48     NP1 = 16     NP2 = 16     NP3 = 16

FMT1
(/.2F10.0,F10.2,2F10.1,3F10.2,/,F10.1,2F10.3,F10.4,2F10.1,        ,             2F10.2
IPUNCH =    412         1      1385       450      1251      1553       827
           1178       734       122       123       530      1287      1257
            797      1148
 NAMES =  CASE       ALT        XM      DTAMB    V-KTAS   YCOMPD15   PAMB
         T-AMB(R)   HPX(3)   BLD(9)   BLD(10)    ERAM       WD(1)    WCOR(1)
           P(1)      T(1)


      20.    20000.      0.67       0.0      411.7      0.00      6.75    447.35
    100.2     0.032     0.000    0.9950      469.7     737.1      9.08    487.61


FMT2
(F10.2,4F10.1,F10.2,F10.4,F10.2,/,8F10.2,)
IPUNCH =    314       651       665      1557      1323      1556      1558
            901       895       888      1174      1167        30        23
           1313      1306
 NAMES =  BPR(1)     FG        F-RAM   YCOMPD19   WFT      YCOMPD18 YCOMPD20
          RC-OA      R(25)     R(18)     T(27)     T(20)   AREA(27) AREA(20)
          WD(27)     WD(20)

    23.86   11071.2   10143.6     839.9     830.1     87.65    0.9884     11.10
     1.44      1.09    450.54   1071.80   2184.70    294.19    450.84     18.45

FMT3
(2F10.1,F10.2,4F10.4,F10.1/F10.3,F10.1,6F10.0,)
IPUNCH =   1459      1448      1157       413       416       415       418
            698      1578       274      1554      1554      1554      1554
           1554      1554
 NAMES =  XN(14)    XN(3)      T(10)    CD-18    CFG-19    CD-8      CFG-9
          HP(1)   YCOMPD40  BLDP(9)  YCOMPD16  YCOMPD16  YCOMPD16  YCOMPD16
        YCOMPD16  YCOMPD16

   1586.0    9844.3   2005.27    0.9517    0.9938    0.9298    0.9921    1942.7
    0.995      39.1    99999.    99999.    99999.    99999.    99999.    99999.
```

```
TERMAP (VER 12)  TITLE=  NASA LOW NOISE MODEL (FLOW SCALE DOWN OF MDXX BPR=14 SHORT BYP DUCT MODEL)        DATE= 05-26-92 CASE=   21.0
(CMS  04-06-92) STITLE= 10000 FT, 0.56 MN, FLIGHT IDLE, FAN CORR N=50 PCT                                 TIME= 16:15:20 PAGE=     27

   ALT    PAMB    TAMBF  TAMBR   DTAMB DTAMTP PRELHM  KTAS    KCAS    XM     RPR    DEFF   ERAM     P1     T1R   DEFTIP ERAMTP   PTIP  TTIPR
 10000. 10.107   23.34 483.01     0.0    0.0    0.0  357.5   310.8  0.560  1.231 0.9950 0.9950 12.442 513.36 0.0000 0.0000  0.000    0.0
```

(N)	ID	NSI	T-R	P	W-COR	W	R	EFF	FAR	AREA	XMN	PS	THETA	DELTA	H	SF-N,1	(N)
1	FAN	0	513.4	12.442	641.627	546.015	1.0437	0.7826	0.00000	0.0	0.000	0.000	0.990	0.847	122.68	1.0191	1
2	DELP	0	521.4	12.986	22.727	20.030	0.9984	0.0000	0.00000	384.3	0.100	12.895	1.005	0.884	124.62	0.2349	2
3	HPC	0	521.4	12.965	22.765	20.030	8.0952	0.7790	0.00000	0.0	0.000	0.000	1.005	0.882	124.62	1.0241	3
4	COOL	0	1059.5	104.952	3.635	18.165	0.0000	0.0000	0.00000	0.0	0.000	0.000	2.043	7.141	255.82	0.0000	4
5	DELP	0	1059.5	104.952	3.635	18.165	1.0000	0.0000	0.00000	23.7	0.273	99.741	2.043	7.141	255.82	0.0000	5
6	DELP	0	1059.5	104.952	3.635	18.165	0.9733	0.0000	0.00000	20.6	0.318	97.943	2.043	7.141	255.82	0.4000	6
7	HX C	0	1059.5	102.149	3.335	16.221	1.0000	0.0000	0.00000	26.7	0.219	98.851	2.043	6.951	255.82	0.0000	7
8	BURN	0	1049.6	102.149	3.320	16.221	0.9780	0.9990	0.00000	26.5	0.219	98.841	2.024	6.951	253.35	0.6799	8
9	COOL	0	1987.2	99.900	4.737	16.450	0.0000	0.0000	0.01408	0.0	0.000	0.000	3.831	6.798	509.62	0.0000	9
10	HPT	0	1935.2	99.900	5.075	17.498	4.5340	0.8992	0.01322	0.0	0.000	0.000	3.642	6.798	494.41	1.0046	10
11	PWRK	0	1387.0	22.034	19.085	17.498	0.0000	0.0000	0.01322	0.0	0.000	0.000	2.674	1.499	343.98	0.0007	11
12	COOL	0	1382.0	22.034	19.812	18.197	0.0000	0.0000	0.01271	0.0	0.000	0.000	2.665	1.499	342.48	0.0000	12
13	DELP	0	1357.2	22.034	20.757	19.238	0.9973	0.0000	0.01201	196.0	0.186	21.529	2.617	1.499	335.66	0.1163	13
14	LPT	0	1357.2	21.975	21.082	19.238	2.0720	0.8961	0.01201	0.0	0.000	0.000	2.578	1.495	335.65	1.0003	14
15	COOL	0	1145.6	10.606	39.619	19.238	0.0000	0.0000	0.01201	0.0	0.000	0.000	2.209	0.722	280.43	0.0000	15
16	DELP	0	1145.0	10.606	39.871	19.366	0.9988	0.0000	0.01193	406.6	0.171	10.398	2.208	0.722	280.27	0.0609	16
17	COOL	0	1145.0	10.593	39.919	19.366	0.0000	0.0000	0.01193	0.0	0.000	0.000	2.208	0.721	280.27	0.0000	17
18	NOZZ	110	1140.7	10.593	40.215	19.546	1.0481	0.0000	0.01182	1.0	0.000	0.000	2.199	0.721	279.13	0.0000	18
19	TH8	0	1126.6	10.107	41.889	19.546	1.0481	0.0000	0.01182	294.2	0.262	10.104	2.172	0.688	275.51	1.0000	19
20	EX9	0	1126.6	10.107	41.889	19.546	1.0000	0.0000	0.01182	294.2	0.262	10.107	2.172	0.688	275.51	0.0000	20
21	COOL	0	521.4	12.986	596.831	525.985	0.0000	0.0000	0.00000	0.0	0.000	0.000	1.005	0.884	124.62	0.0000	21
22	DELP	0	521.4	12.986	596.831	525.985	0.9977	0.0000	0.00000	3500.0	0.304	12.181	1.005	0.884	124.62	0.0378	22
23	HX H	0	521.4	12.956	598.234	525.985	1.0000	0.0185	0.00000	3500.0	0.305	12.148	1.005	0.882	124.62	0.0000	23
24	DELP	0	521.8	12.956	598.418	525.985	1.0000	0.0000	0.00000	3500.0	0.305	12.148	1.006	0.882	124.69	0.0000	24
25	NOZZ	0	521.8	12.956	598.418	525.985	1.2819	0.0000	0.00000	1.0	0.000	0.000	1.006	0.882	124.69	0.0000	25
26	TH18	0	486.0	10.107	740.329	525.985	1.2819	0.0000	0.00000	2184.7	0.606	10.107	0.937	0.688	116.11	1.0000	26
27	EX19	0	486.0	10.107	740.329	525.985	1.0000	0.0000	0.00000	2184.7	0.606	10.107	0.937	0.688	116.11	0.0000	27

```
S 1= RC-OA  =     8.4353 : S 2=EMAP(7) =   -9.8804 : S 3= EFF(23)=     0.0185

Y 1=      0.7839= COMP POLY EFF AT STATION  1                          : Y16=99999.0000=          0.000000 -               0.000000 +99999.0000
Y 2=      0.8327= COMP POLY EFF AT STATION  3                          : Y17=     2.8490=           P(25)   -   PS(26)            +     0.0000
Y 3= 1475.5232=             T(10)    -        459.669922 +    0.0000 : Y18=    83.8755=         YCOMPD17 *           29.440002 +     0.0000
Y 4=  150.4358=             H(10)    -    H(11)            +    0.0000 : Y19=   573.8994=            FN     - YCOMPD18            +     0.0000
Y 5=   41.3018=          YCOMPD 4 / THETA 10               +    0.0000 : Y20=     1.4323=           WFE     / YCOMPD19            +     0.0000
Y 6=   55.2234=             H(14)    -    H(15)            +    0.0000 : Y21=    22.6574=            T(1)   **           0.500000 +     0.0000
Y 7=   21.4204=          YCOMPD 6 / THETA 14               +    0.0000 : Y22=     1.8210=         YCOMPD21 /    P(1)                +     0.0000
Y 8=    1.2468=           RNI(14) /             0.379900 +    0.0000 : Y23=   994.3164=         YCOMPD22 *    WD(1)               +    -0.0000
Y 9= 2738.7722=          XNMAP 14 *            42.203995 +    0.0000 : Y39=     1.5381=           V-19    /    V-9                 +     0.0000
Y10=    1.6056=          THETA 14 **            0.500000 +    0.0000 : Y40=     0.9950=         0.000000 -               0.000000 +     0.9950
Y11= 4397.4727=          YCOMPD 9 * YCOMPD10               +    0.0000 : Y41=     7.5158=          HP(14)   *               0.005000 +     0.0000
Y12=   10.0141=           FAR(9)   -            0.000000 +   10.0000 : Y42=     0.3201=           T(24)   -    T(23)               +     0.0000
Y15=    0.0000=         0.000000 -              0.000000 +    0.0000 : Y43=  6088.7891=           XN(1)   *               4.490000 +     0.0000

T 1=  375.0002  X=YCOMPD15 Z=          W=          ID=03/11/91 E=2 : T 3=    0.1409  X=RMAP(14) Z=XNMAP 14 W=          ID=LPT X MN E=1
T 2= 2184.6985  X=  XM      Z=XNMAP  1 W=          ID=BYP AREA E=1 : T 4=    0.9950  X=YCOMPD23 Z=  XM     W=          ID=INLETREC E=1

P 1=YCOMPD41--> HPX(1)   : P 4=YTABLE 4--> DEFF

    --VARY-- ---HI--- ---LO---  (+)   OBJECT = TARGET   (+) LIM
C19= AREA(26)  2817.00  2183.00 1.00  AREA(26) YTABLE 2 0.00 L=1

MODE=XNMAP  1  PLA=     50.000  ADDPLA=     0.000  PLA LIMIT= PLA
IDES=0  NVAR=10  MAX ERR# 8= 14.HP+10*WD = 0.00019  MATRX= 2  LOOP= 22
IOMT  LOOPS=  1  MAX ERROR =       0.      = 0.00000

                    B L E E D S    A N D    L E A K A G E S
                    ---------------------------------------
      FR - TO %W(FR)  %W(1)     W     T-R      P       H   DH/DHT :       FR - TO %W(FR)  %W(1)       W     T-R      P       H   DH/DHT
B 3=  3 - 12 0.0520 0.0019   1.042  900.8  64.568  216.46 0.7000 : B 7=  3 - OB 0.0000 0.0000    0.000  847.3  53.834  203.34 0.6000
B 5=  3 - 17 0.0090 0.0003   0.180  657.9  25.576  157.42 0.2500 : B 9=  3 - OB 0.0321 0.0012    0.643  793.5  44.344  190.22 0.5000
 STA  3 TOTL 0.0931 0.0034   1.865

      FR - TO %W(FR)  %W(1)     W     T-R      P       H   DH/DHT :       FR - TO %W(FR)  %W(1)       W     T-R      P       H   DH/DHT
B 1=  6 -  9 0.0577 0.0019   1.048 1059.5 102.149  255.82 1.0000 : B 6=  6 - 21 0.0000 0.0000    0.000 1059.5 102.149  255.82 1.0000
B 2=  6 - 11 0.0385 0.0013   0.699 1059.5 102.149  305.00 1.0000 : B 8=  6 - OB 0.0038 0.0001    0.069 1059.5 102.149  255.82 1.0000
B 4=  6 - 15 0.0070 0.0002   0.127 1059.5 104.251  255.82 0.2500
 STA  6 TOTL 0.1070 0.0036   1.944

      FR - TO %W(FR)  %W(1)     W     T-R      P       H   DH/DHT
B10= 22 - OB 0.0000 0.0000   0.000  521.4  12.956  124.62 1.0000
 STA 22 TOTL 0.0000 0.0000   0.000

                    C O M P O N E N T    P E R F O R M A N C E
                    ------------------------------------------
  N  ID      BETA       XN       XN-MAP      HP     HPX/PHP  SF(N,2)    W-MAP  EFF-MAP    R-MAP    SMRELL    FLOW ID     EFF ID   MAPTYP
  1 FAN     1.1658  1356.078    50.000   1495.96     7.52    0.0000   601.153   0.7680   1.0596    75.882   QUIETENG   QUIETENG     1
  3 HPC     1.0346  9633.156    84.517   3575.48   100.20    0.0000    36.914   0.7607   7.4505    32.600    0.   0.    0.   0.     1
 10 HPT     0.0000  9633.156   104.832   3675.61    48.66    0.0000     0.997   0.8951   3.8309     6.342   JAN.2690   JAN.2690     1
 14 LPT     0.0000  1356.078    64.894   1503.16     0.00    0.0000     0.933   0.8932   2.0720     5.350   ANALYTIC   ANALYTIC     1
 14 LPT                         RNISF(1,14),(2,14),(3,14),(4,14)=   1.00125  1.00297  1.00000   1.00000

                    N O Z Z L E    P E R F O R M A N C E
                    ------------------------------------
  NOZZLE       (N)  TYP      FG        FN       RJ     CFG      CD    AREA(TH)  V-EXIT  SF(TH,2) SF(EX,2)   CFGT ID     CDT ID   MAPTYP
PRI (8-9)      18    1     256.81   -118.84  1.0481  0.9919  0.9276    294.19   426.2     4.126    0.000  CFG MDXX  CD  MDXX      1
SEC (18-19)    25    1   10641.45    776.62  1.2819  0.9930  0.9421   2184.70   655.5    31.427    0.000  CFG MDXX  CD  MDXX      1

                    F I N A L    E N G I N E    P E R F O R M A N C E
                    -------------------------------------------------
 BPR(1) RMIX(1) GAINMX(1) ANGMIX(1)     BPR(2) RMIX(2) GAINMX(2) ANGMIX(2)
26.2604  1.2230  0.0000    0.0000       0.0000  0.0000  0.0000    0.0000

   FG      FRAM     WFE   FARST   EPR     WAENG    WACOR   RCOA    FNR1   FNGF
10898.3 10240.5   822.0 .06775  0.851  546.015  641.627   8.44    777. 1.0000

   FN      SFC     WFT    FHV   NODISS   EFFTH    FN/WA  EFFOA   WFTR1  WFTGF
 657.8  1.2496   822.0 18550.    0      0.1449  1.2047 0.7757    976. 1.0000

WARNING: TABLE(S) EXTRAPOLATED. NON-ZERO NSI(S).

NPTOT = 48      NP1 = 16      NP2 = 16      NP3 = 16

FMT1
(/,2F10.0,F10.2,2F10.1,3F10.2,/,F10.1,2F10.3,F10.4,2F10.1,      ,          2F10.2
IPUNCH =   412         1      1385       450      1251      1553       827
          1178       734       122       123       530      1287      1257
           797      1148
 NAMES =  CASE       ALT        XM      DTAMB    V-KTAS   YCOMPD15   PAMB
        T-AMB(R)   HPX(3)    BLD(9)   BLD(10)    ERAM      WD(1)    WCOR(1)
          P(1)       T(1)


       21.      10000.      0.56       0.0       357.5      0.00     10.11     483.01
     100.2       0.032     0.000    0.9950       546.0     641.6     12.44     513.36


FMT2
(F10.2,4F10.1,F10.2,F10.4,F10.2,/,8F10.2,)
IPUNCH =   314       651       665      1557      1323      1556      1558
           901       895       888      1174      1167        30        23
          1313      1306
 NAMES =  BPR(1)      FG     F-RAM   YCOMPD19    WFT     YCOMPD18 YCOMPD20
          RC-OA      R(25)    R(18)     T(27)     T(20)   AREA(27) AREA(20)
          WD(27)    WD(20)

     26.26    10898.3   10240.5     573.9     822.0     83.88    1.4323      8.44
      1.28       1.05    485.95   1126.62   2184.70    294.19    525.99     19.55

FMT3
(2F10.1,F10.2,4F10.4,F10.1/F10.3,F10.1,6F10.0,)
IPUNCH =  1459      1448      1157       413       416       415       418
           698      1578       274      1554      1554      1554      1554
          1554      1554
 NAMES =  XN(14)    XN(3)      T(10)    CD-18    CFG-19    CD-8      CFG-9
           HP(1)  YCOMPD40 BLDP(9)  YCOMPD16 YCOMPD16 YCOMPD16 YCOMPD16
        YCOMPD16 YCOMPD16

    1356.1    9633.2   1935.19    0.9421    0.9930    0.9276    0.9919    1496.0
     0.995      44.3    99999.    99999.    99999.    99999.    99999.    99999.
```

```
TERMAP (VER 12)  TITLE=  NASA LOW NOISE MODEL (FLOW SCALE DOWN OF MDXX BPR=14 SHORT BYP DUCT MODEL)       DATE= 05-26-92 CASE=  22.0
(CMS  04-06-92) STITLE= 10000 FT, 0.45 MN, FLIGHT IDLE, FAN CORR N=45 PCT                                TIME= 16:15:20 PAGE=    28

   ALT    PAMB    TAMBF  TAMBR  DTAMB DTAMTP PRELHM  KTAS   KCAS    XM    RPR   DEFF   ERAM    P1    T1R   DEFTIP ERAMTP  PTIP  TTIPR
 10000. 10.107   23.34 483.01    0.0    0.0    0.0  287.3  248.8  0.450  1.143 0.9950 0.9950 11.555 502.61 0.0000 0.0000 0.000   0.0
```

(N)	ID	NSI	T-R	P	W-COR	W	R	EFF	FAR	AREA	XMN	PS	THETA	DELTA	H	SF-N,1	(N)
1	FAN	0	502.6	11.555	566.806	452.732	1.0423	0.8111	0.00000	0.0	0.000	0.000	0.969	0.786	120.10	1.0191	1
2	DELP	0	510.0	12.044	21.573	17.830	0.9985	0.0000	0.00000	384.3	0.095	11.968	0.983	0.820	121.87	0.2349	2
3	HPC	0	510.0	12.026	21.605	17.830	7.6592	0.7722	0.00000	0.0	0.000	0.000	0.983	0.818	121.88	1.0241	3
4	COOL	0	1023.5	92.112	3.624	16.170	0.0000	0.0000	0.00000	0.0	0.000	0.000	1.973	6.268	246.84	0.0000	4
5	DELP	0	1023.5	92.112	3.624	16.170	1.0000	0.0000	0.00000	23.7	0.272	87.569	1.973	6.268	246.84	0.0000	5
6	DELP	0	1023.5	92.112	3.624	16.170	0.9735	0.0000	0.00000	20.6	0.317	86.002	1.973	6.268	246.84	0.4000	6
7	HX C	0	1023.5	89.668	3.325	14.440	1.0000	0.0000	0.00000	26.7	0.218	86.793	1.973	6.101	246.84	0.0000	7
8	BURN	0	1014.1	89.668	3.309	14.440	0.9781	0.9990	0.00000	26.5	0.218	86.785	1.955	6.101	244.50	0.6799	8
9	COOL	0	1935.9	87.708	4.739	14.638	0.0000	0.0000	0.01374	0.0	0.000	0.000	3.733	5.968	494.92	0.0000	9
10	HPT	0	1884.8	87.708	5.073	15.571	4.4085	0.8984	0.01291	0.0	0.000	0.000	3.550	5.968	480.06	1.0046	10
11	PWRK	0	1357.5	19.895	18.608	15.571	0.0000	0.0000	0.01291	0.0	0.000	0.000	2.617	1.354	336.04	0.0007	11
12	COOL	0	1352.0	19.895	19.313	16.194	0.0000	0.0000	0.01241	0.0	0.000	0.000	2.607	1.354	334.42	0.0000	12
13	DELP	0	1327.2	19.895	20.230	17.121	0.9975	0.0000	0.01173	196.0	0.181	19.463	2.559	1.354	327.65	0.1163	13
14	LPT	0	1327.2	19.845	20.533	17.121	1.8907	0.8821	0.01173	0.0	0.000	0.000	2.523	1.350	327.65	1.0003	14
15	COOL	0	1146.5	10.496	35.639	17.121	0.0000	0.0000	0.01173	0.0	0.000	0.000	2.210	0.714	280.60	0.0000	15
16	DELP	0	1145.7	10.496	35.863	17.234	0.9990	0.0000	0.01165	406.6	0.153	10.331	2.209	0.714	280.38	0.0609	16
17	COOL	0	1145.7	10.486	35.897	17.234	0.0000	0.0000	0.01165	0.0	0.000	0.000	2.209	0.714	280.38	0.0000	17
18	NOZZ	110	1141.3	10.486	36.161	17.394	1.0376	0.0000	0.01154	1.0	0.000	0.000	2.200	0.714	279.20	0.0000	18
19	TH8	0	1130.0	10.107	37.334	17.394	1.0376	0.0000	0.01154	294.2	0.234	10.114	2.179	0.688	276.32	1.0000	19
20	EX9	0	1130.0	10.107	37.334	17.394	1.0000	0.0000	0.01154	294.2	0.234	10.107	2.179	0.688	276.32	0.0000	20
21	COOL	0	510.0	12.044	526.204	434.902	0.0000	0.0000	0.00000	0.0	0.000	0.000	0.983	0.820	121.87	0.0000	21
22	DELP	0	510.0	12.044	526.204	434.902	0.9982	0.0000	0.00000	3500.0	0.264	11.473	0.983	0.820	121.87	0.0378	22
23	HX H	0	510.0	12.023	527.150	434.902	1.0000	0.0185	0.00000	3500.0	0.265	11.450	0.983	0.818	121.88	0.0000	23
24	DELP	0	510.3	12.023	527.319	434.902	1.0000	0.0000	0.00000	3500.0	0.265	11.450	0.984	0.818	121.95	0.0000	24
25	NOZZ	110	510.3	12.023	527.319	434.902	1.1896	0.0000	0.00000	1.0	0.000	0.000	0.984	0.818	121.95	0.0000	25
26	TH18	0	485.6	10.107	611.894	434.902	1.1896	0.0000	0.00000	2184.7	0.504	10.106	0.936	0.688	116.02	1.0000	26
27	EX19	0	485.6	10.107	611.894	434.902	1.0000	0.0000	0.00000	2184.7	0.504	10.107	0.936	0.688	116.02	0.0000	27

```
S 1= RC-OA  =    7.9715 : S 2=EMAP(7) =   -9.4295 : S 3= EFF(23)=     0.0185

Y 1=     0.8122= COMP POLY EFF AT STATION  1                            : Y16=99999.0000=        0.000000 -              0.000000 +99999.0000
Y 2=     0.8263= COMP POLY EFF AT STATION  3                            : Y17=     1.9164=         P(25)   -   PS(26)            +     0.0000
Y 3= 1425.1431=              T(10)   -          459.669922 +    0.0000 : Y18=    56.4176=       YCOMPD17 *            29.440002 +     0.0000
Y 4=  144.0146=              H(10)   -    H(11)            +    0.0000 : Y19=   635.0286=          FN     - YCOMPD18            +     0.0000
Y 5=   40.5669=          YCOMPD 4  / THETA 10              +    0.0000 : Y20=     1.1251=         WFE     / YCOMPD19            +     0.0000
Y 6=   47.0505=              H(14)   -    H(15)            +    0.0000 : Y21=    22.4190=          T(1)   **             0.500000 +     0.0000
Y 7=   18.6508=          YCOMPD 6  / THETA 14              +    0.0000 : Y22=     1.9402=       YCOMPD21 /    P(1)                +     0.0000
Y 8=    1.1547=            RNI(14) /             0.379900 +    0.0000 : Y23=   878.3684=       YCOMPD22 *   WD(1)                +    -0.0000
Y 9= 2465.5637=          XNMAP 14  *            42.203995 +    0.0000 : Y39=     1.4330=         V-19     /   V-9                 +     0.0000
Y10=    1.5883=          THETA 14  **            0.500000 +    0.0000 : Y40=     0.9950=       0.000000 -              0.000000 +     0.9950
Y11= 3916.0659=          YCOMPD 9  * YCOMPD10              +    0.0000 : Y41=     5.6985=        HP(14)   *              0.005000 +     0.0000
Y12=   10.0137=            FAR(9)  -             0.000000 +   10.0000 : Y42=     0.3276=         T(24)   -     T(23)             +     0.0000
Y15=    0.0000=          0.000000 -             0.000000 +    0.0000 : Y43=  5422.2266=         XN(1)   *              4.490000 +     0.0000

T 1=  375.0002  X=YCOMPD15 Z=          W=           ID=03/11/91 E=2  : T 3=      0.1396  X=RMAP(14) Z=XNMAP 14 W=            ID=LPT X MN E=1
T 2= 2184.6985  X=   XM     Z=XNMAP  1 W=           ID=BYP AREA E=1  : T 4=      0.9950  X=YCOMPD23 Z=   XM     W=            ID=INLETREC E=1

P 1=YCOMPD41--> HPX(1)   : P 4=YTABLE 4--> DEFF

     --VARY-- ---HI--- ---LO---  (+)   OBJECT = TARGET   (+) LIM
C19= AREA(26)  2817.00  2183.00 1.00  AREA(26) YTABLE 2 0.00 L=1

MODE=XNMAP  1  PLA=     45.000  ADDPLA=      0.000  PLA LIMIT= PLA
IDES=0  NVAR=10  MAX ERR# 9= 19.PS+A/P+A = 0.00037  MATRX= 2  LOOP= 31
IOMT  LOOPS=  1  MAX ERROR = STA.14.RNIX = 0.00021

                         B L E E D S    A N D    L E A K A G E S
                         ---------------------------------------
      FR - TO %W(FR)  %W(1)      W     T-R      P       H    DH/DHT :        FR - TO %W(FR)  %W(1)      W     T-R      P        H    DH/DHT
B 3=   3 - 12 0.0520 0.0020   0.927  871.8   57.271  209.35 0.7000 : B 7=   3 - OB 0.0000 0.0000   0.000  820.7   47.954  196.86 0.6000
B 5=   3 - 17 0.0090 0.0004   0.160  640.1   23.229  153.12 0.2500 : B 9=   3 - OB 0.0321 0.0013   0.572  769.3   39.688  184.36 0.5000
 STA   3 TOTL 0.0931 0.0037   1.660

      FR - TO %W(FR)  %W(1)      W     T-R      P       H    DH/DHT :        FR - TO %W(FR)  %W(1)      W     T-R      P        H    DH/DHT
B 1=   6 -  9 0.0577 0.0021   0.933 1023.5   89.668  246.84 1.0000 : B 6=   6 - 21 0.0000 0.0000   0.000 1023.5   89.668  246.84 1.0000
B 2=   6 - 11 0.0385 0.0014   0.623 1023.5   89.668  293.90 1.0000 : B 8=   6 - OB 0.0038 0.0001   0.061 1023.5   89.668  246.84 1.0000
B 4=   6 - 15 0.0070 0.0003   0.113 1023.5   91.501  246.84 0.2500
 STA   6 TOTL 0.1070 0.0038   1.730

      FR - TO %W(FR)  %W(1)      W     T-R      P       H    DH/DHT
B10=  22 - OB 0.0000 0.0000   0.000  510.0   12.023  121.88 1.0000
 STA  22 TOTL 0.0000 0.0000   0.000

                      C O M P O N E N T    P E R F O R M A N C E
                      ------------------------------------------
  N  ID       BETA      XN       XN-MAP      HP     HPX/PHP  SF(N.2)     W-MAP   EFF-MAP    R-MAP   SMRELL    FLOW ID     EFF ID   MAPTYP
  1 FAN     1.0928  1207.623    45.000   1134.03     5.70    0.0000   531.052   0.7959   1.0576   71.505  QUIETENG   QUIETENG      1
  3 HPC     1.0316  9422.559    83.592   3031.53   100.20    0.0000    35.034   0.7540   7.0542   31.998   0.  0.      0.  0.       1
 10 HPT     0.0000  9422.559   103.865   3131.29    41.45    0.0000     0.996   0.8943   3.7304    6.314  JAN.2690   JAN.2690      1
 14 LPT     0.0000  1207.623    58.420   1139.71     0.00    0.0000     0.910   0.8802   1.8907    5.103  ANALYTIC   ANALYTIC      1
 14 LPT                      RNISF(1,14),(2,14),(3,14),(4,14)=   1.00083  1.00196  1.00000  1.00000

                         N O Z Z L E    P E R F O R M A N C E
                         ------------------------------------
  NOZZLE       (N)  TYP      FG        FN       RJ      CFG      CD     AREA(TH)  V-EXIT  SF(TH.2) SF(EX.2)   CFGT ID    CDT ID   MAPTYP
PRI (8-9)      18    1     203.91    -64.81  1.0376  0.9919  0.9271    294.19    380.3     3.979    0.000   CFG MDXX  CD  MDXX     1
SEC (18-19)    25    1    7310.64    756.25  1.1896  0.9926  0.9364   2184.70    544.9    29.701    0.000   CFG MDXX  CD  MDXX     1

                 F I N A L    E N G I N E    P E R F O R M A N C E
                 -------------------------------------------------
  BPR(1) RMIX(1) GAINMX(1) ANGMIX(1)     BPR(2) RMIX(2) GAINMX(2) ANGMIX(2)
 24.3914  1.1465  0.0000    0.0000       0.0000  0.0000  0.0000    0.0000

    FG      FRAM    WFE   FARST    EPR     WAENG    WACOR   RCOA    FNR1   FNGF
  7514.6  6823.1   714.5 .06775  0.907  452.732  566.806   7.97    879. 1.0000

    FN      SFC     WFT    FHV   NODISS   EFFTH    FN/WA  EFFOA   WFTR1  WFTGF
   691.4  1.0333   714.5 18550.    0     0.1367   1.5273 0.7700    923. 1.0000

WARNING: TABLE(S) EXTRAPOLATED. NON-ZERO NSI(S).

NPTOT = 48      NP1 = 16      NP2 = 16      NP3 = 16

FMT1
(/,2F10.0,F10.2,2F10.1,3F10.2,/,F10.1,2F10.3,F10.4,2F10.1,     ,          2F10.2
IPUNCH =    412         1       1385       450      1251      1553       827
           1178       734        122       123       530      1287      1257
            797      1148
 NAMES =   CASE      ALT         XM      DTAMB    V-KTAS   YCOMPD15    PAMB
          T-AMB(R)  HPX(3)    BLD(9)   BLD(10)    ERAM      WD(1)    WCOR(1)
            P(1)     T(1)


       22.      10000.       0.45       0.0      287.3      0.00      10.11     483.01
     100.2       0.032      0.000     0.9950     452.7     566.8      11.56     502.61


FMT2
(F10.2,4F10.1,F10.2,F10.4,F10.2,/,8F10.2,)
IPUNCH =    314       651        665      1557      1323      1556      1558
            901       895        888      1174      1167        30        23
           1313      1306
 NAMES =   BPR(1)     FG       F-RAM   YCOMPD19    WFT     YCOMPD18  YCOMPD20
           RC-OA     R(25)     R(18)     T(27)     T(20)   AREA(27)  AREA(20)
           WD(27)    WD(20)

     24.39     7514.6     6823.1     635.0     714.5      56.42     1.1251      7.97
      1.19       1.04     485.58   1130.03   2184.70     294.19     434.90     17.39

FMT3
(2F10.1,F10.2,4F10.4,F10.1/F10.3,F10.1,6F10.0,)
IPUNCH =   1459      1448       1157       413       416       415       418
            698      1578        274      1554      1554      1554      1554
           1554      1554
 NAMES =   XN(14)    XN(3)      T(10)     CD-18    CFG-19     CD-8     CFG-9
           HP(1)   YCOMPD40  BLDP(9)  YCOMPD16  YCOMPD16  YCOMPD16  YCOMPD16
          YCOMPD16 YCOMPD16

    1207.6     9422.6    1884.81    0.9364    0.9926    0.9271    0.9919    1134.0
     0.995       39.7     99999.    99999.    99999.    99999.    99999.    99999.
```

```
TERMAP (VER 12)  TITLE=  NASA LOW NOISE MODEL (FLOW SCALE DOWN OF MDXX BPR=14 SHORT BYP DUCT MODEL)       DATE= 05-26-92 CASE=  23.0
(CMS  04-06-92) STITLE= 1500 FT, 0.39 MN, FLIGHT IDLE, FAN CORR N=42 PCT                                   TIME= 16:15:20 PAGE=    29

   ALT   PAMB   TAMBF  TAMBR  DTAMB DTAMTP PRELHM  KTAS   KCAS   XM     RPR   DEFF   ERAM    PI     TIR   DEFTIP ERAMTP  PTIP  TTIPR
 1500. 13.917  53.65 513.32    0.0    0.0    0.0  256.7  251.3  0.390  1.105 0.9950 0.9950 15.378 528.96 0.0000 0.0000  0.000   0.0

(N) ID    NSI     T-R        P      W-COR        W        R       EFF      FAR      AREA    XMN      PS     THETA  DELTA     H    SF-N,1  (N)
--- --    ---     ---        -      -----        -        -       ---      ---      ----    ---      --     -----  -----     -    ------  ---
 1 FAN      0    529.0    15.378   521.872   540.745  1.0391   0.8104  0.00000      0.0  0.000     0.000  1.020  1.046  126.42  1.0191    1
 2 DELP     0    536.2    15.979    20.639    22.073  0.9986   0.0000  0.00000    384.3  0.091    15.887  1.034  1.087  128.15  0.2349    2
 3 HPC      0    536.2    15.958    20.668    22.073  7.2666   0.7656  0.00000      0.0  0.000     0.000  1.034  1.086  128.15  1.0241    3
 4 COOL     0   1060.7   115.958     3.628    20.018  0.0000   0.0000  0.00000      0.0  0.000     0.000  2.045  7.890  256.14  0.0000    4
 5 DELP     0   1060.7   115.958     3.628    20.018  1.0000   0.0000  0.00000     23.7  0.272   110.225  2.045  7.890  256.14  0.0000    5
 6 DELP     0   1060.7   115.958     3.628    20.018  0.9734   0.0000  0.00000     20.6  0.318   108.247  2.045  7.890  256.13  0.4000    6
 7 HX C     0   1060.7   112.874     3.328    17.876  1.0000   0.0000  0.00000     26.7  0.218   109.246  2.045  7.680  256.13  0.0000    7
 8 BURN     0   1051.1   112.874     3.313    17.876  0.9781   0.9990  0.00000     26.5  0.219   109.234  2.027  7.680  253.72  0.6799    8
 9 COOL     0   1992.9   110.399     4.730    18.129  0.0000   0.0000  0.01415      0.0  0.000     0.000  3.842  7.512  511.29  0.0000    9
10 HPT      0   1940.7   110.399     5.068    19.284  4.3055   0.8984  0.01329      0.0  0.000     0.000  3.652  7.512  496.01  1.0046   10
11 PWRK     0   1407.8    25.641    18.208    19.284  0.0000   0.0000  0.01329      0.0  0.000     0.000  2.714  1.745  349.52  0.0007   11
12 COOL     0   1402.0    25.641    18.897    20.054  0.0000   0.0000  0.01277      0.0  0.000     0.000  2.703  1.745  347.80  0.0000   12
13 DELP     0   1376.4    25.641    19.795    21.202  0.9976   0.0000  0.01207    196.0  0.177    25.108  2.654  1.745  340.76  0.1163   13
14 LPT      0   1376.4    25.579    20.107    21.202  1.7791   0.8769  0.01207      0.0  0.000     0.000  2.614  1.741  340.75  1.0003   14
15 COOL     0   1207.7    14.377    33.071    21.202  0.0000   0.0000  0.01207      0.0  0.000     0.000  2.329  0.978  296.51  0.0000   15
16 DELP     0   1206.8    14.377    33.277    21.342  0.9992   0.0000  0.01199    406.6  0.142    14.183  2.327  0.978  296.25  0.0609   16
17 COOL     0   1206.8    14.366    33.304    21.342  0.0000   0.0000  0.01199      0.0  0.000     0.000  2.327  0.978  296.25  0.0000   17
18 NOZZ   110   1202.1    14.366    33.548    21.541  1.0322   0.0000  0.01188      1.0  0.000     0.000  2.318  0.978  294.99  0.0000   18
19   TH8    0   1192.1    13.917    34.485    21.541  1.0322   0.0000  0.01188    294.2  0.216    13.915  2.298  0.947  292.38  1.0000   19
20   EX9    0   1192.1    13.917    34.485    21.541  1.0000   0.0000  0.01188    294.2  0.216    13.917  2.298  0.947  292.38  0.0000   20
--- --    ---     ---        -     -----         -        -       ---      ---     ----    ---       --    -----  -----     -    ------  ---
21 COOL     0    536.2    15.979   484.991   518.672  0.0000   0.0000  0.00000      0.0  0.000     0.000  1.034  1.087  128.15  0.0000   21
22 DELP     0    536.2    15.979   484.991   518.672  0.9985   0.0000  0.00000   3500.0  0.242    15.341  1.034  1.087  128.15  0.0378   22
23 HX H     0    536.2    15.955   485.725   518.672  1.0000   0.0185  0.00000   3500.0  0.242    15.316  1.034  1.086  128.15  0.0000   23
24 DELP     0    536.5    15.955   485.883   518.672  1.0000   0.0000  0.00000   3500.0  0.242    15.316  1.034  1.086  128.23  0.0000   24
25 NOZZ   110    536.5    15.955   485.883   518.672  1.1465   0.0000  0.00000      1.0  0.000     0.000  1.034  1.086  128.23  0.0000   25
26 TH18     0    515.9    13.917   546.262   518.672  1.1465   0.0000  0.00000   2209.3  0.446    13.916  0.995  0.947  123.29  1.0000   26
27 EX19     0    515.9    13.917   546.262   518.672  1.0000   0.0000  0.00000   2209.3  0.446    13.917  0.995  0.947  123.29  0.0000   27
--- --    ---     ---        -     -----         -        -       ---      ---     ----    ---       --    -----  -----     -    ------  ---

S 1= RC-OA   =    7.5406 : S 2=EMAP(7) =    -9.6390 : S 3= EFF(23)=     0.0185

Y 1=     0.8115= COMP POLY EFF AT STATION  1                          : Y16=99999.0000=          0.000000 -            0.000000 +99999.0000
Y 2=     0.8200= COMP POLY EFF AT STATION  3                          : Y17=     2.0394=          P(25)   -   PS(26)           +     0.0000
Y 3= 1481.0315=            T(10)   -          459.669922 +    0.0000 : Y18=    60.0405=        YCOMPD17 *             29.440002 +     0.0000
Y 4=   146.4854=           H(10)   -    H(11)            +    0.0000 : Y19=   851.9504=          FN      - YCOMPD18             +     0.0000
Y 5=    40.1070=         YCOMPD 4 / THETA 10             +    0.0000 : Y20=     1.0687=         WFE      / YCOMPD19             +     0.0000
Y 6=    44.2402=           H(14)   -    H(15)            +    0.0000 : Y21=    22.9991=          T(1)   **              0.500000 +     0.0000
Y 7=    16.9273=         YCOMPD 6 / THETA 14             +    0.0000 : Y22=     1.4956=        YCOMPD21 /    P(1)                +     0.0000
Y 8=     1.4285=           RNI(14) /            0.379900 +    0.0000 : Y23=   808.7354=        YCOMPD22 *    WD(1)               +    -0.0000
Y 9= 2319.3528=          XNMAP 14 *           42.203995 +    0.0000 : Y39=     1.3765=          V-19    /    V-9                 +     0.0000
Y10=     1.6166=          THETA 14 **           0.500000 +    0.0000 : Y40=     0.9950=        0.000000 -              0.000000 +     0.9950
Y11= 3749.5718=          YCOMPD 9 * YCOMPD10             +    0.0000 : Y41=     6.6356=          HP(14)  *              0.005000 +     0.0000
Y12=    10.0141=           FAR(9)  -             0.000000 +   10.0000 : Y42=     0.3489=          T(24)   -     T(23)            +     0.0000
Y15=     0.0000=         0.000000 -             0.000000 +    0.0000 : Y43= 5191.6992=          XN(1)   *              4.490000 +     0.0000

T 1=  375.0002  X=YCOMPD15 Z=            W=          ID=03/11/91 E=2 : T 3=     0.1248  X=RMAP(14) Z=XNMAP 14 W=           ID=LPT X MN E=1
T 2= 2209.1565  X=  XM      Z=XNMAP   1 W=          ID=BYP AREA E=1 : T 4=     0.9950  X=YCOMPD23 Z=  XM     W=           ID=INLETREC E=1

P 1=YCOMPD41--> HPX(1)   : P 4=YTABLE 4--> DEFF

    --VARY-- ---HI--- ---LO---  (+)   OBJECT = TARGET   (+) LIM
C19= AREA(26)  2817.00  2183.00 1.00  AREA(26) YTABLE 2 0.00 L=1

MODE=XNMAP  1  PLA=    42.000  ADDPLA=     0.000  PLA LIMIT= PLA
IDES=0  NVAR=10  MAX ERR# 8= 14.HP+10*WD = 0.00011  MATRX= 1  LOOP= 15
IOMT  LOOPS=  1  MAX ERROR =        0.     = 0.00000

                      B L E E D S    A N D    L E A K A G E S
                      ---------------------------------------
     FR - TO %W(FR)  %W(1)      W     T-R      P       H    DH/DHT :      FR - TO %W(FR)  %W(1)      W     T-R      P       H    DH/DHT
B 3=  3 - 12 0.0520 0.0021   1.148  906.0  72.829  217.74 0.7000 : B 7=  3 - OB 0.0000 0.0000   0.000  853.8  61.229  204.94 0.6000
B 5=  3 - 17 0.0090 0.0004   0.199  669.2  30.213  160.14 0.2500 : B 9=  3 - OB 0.0321 0.0013   0.709  801.3  50.904  192.14 0.5000
 STA  3 TOTL 0.0931 0.0038   2.055

     FR - TO %W(FR)  %W(1)      W     T-R      P       H    DH/DHT :      FR - TO %W(FR)  %W(1)      W     T-R      P       H    DH/DHT
B 1=  6 -  9 0.0577 0.0021   1.155 1060.7 112.874  256.13 1.0000 : B 6=  6 - 21 0.0000 0.0000   0.000 1060.7 112.874  256.13 1.0000
B 2=  6 - 11 0.0385 0.0014   0.771 1060.7 112.874  304.66 1.0000 : B 8=  6 - OB 0.0038 0.0001   0.076 1060.7 112.874  256.13 1.0000
B 4=  6 - 15 0.0070 0.0003   0.140 1060.7 115.187  256.13 0.2500
 STA  6 TOTL 0.1070 0.0040   2.142

     FR - TO %W(FR)  %W(1)      W     T-R      P       H    DH/DHT
B10= 22 - OB 0.0000 0.0000   0.000  536.2  15.955  128.15 1.0000
 STA 22 TOTL 0.0000 0.0000   0.000

                     C O M P O N E N T    P E R F O R M A N C E
                     -------------------------------------------
  N  ID       BETA       XN       XN-MAP      HP     HPX/PHP  SF(N-2)    W-MAP  EFF-MAP    R-MAP    SMRELL   FLOW ID     EFF ID   MAPTYP
  1 FAN     1.0632  1156.281    42.000   1320.32      6.64   0.0000  488.952   0.7952   1.0533   68.605  QUIETENG  QUIETENG      1
  3 HPC     1.0310  9568.504    82.790   3843.63    100.20   0.0000   33.513   0.7476   6.6972   32.201   0.  0.     0.  0.        1
 10 HPT     0.0000  9568.504   103.986   3943.73     52.91   0.0000    0.995   0.8943   3.6479    6.317  JAN.2690  JAN.2690      1
 14 LPT     0.0000  1156.281    54.956   1327.13      0.00   0.0000    0.890   0.8727   1.7791    4.973  ANALYTIC  ANALYTIC      1
 14 LPT                        RNISF(1,14),(2,14),(3,14),(4,14)=  1.00190  1.00459  1.00000  1.00000

                        N O Z Z L E    P E R F O R M A N C E
                        ------------------------------------
  NOZZLE      (N)  TYP     FG       FN      RJ     CFG      CD    AREA(TH)  V-EXIT  SF(TH,2) SF(EX,2)   CFGT ID    CDT ID   MAPTYP
PRI (8-9)     18    1    239.85   -57.36  1.0322  0.9919  0.9269   294.19   361.2     4.126    0.000   CFG MDXX  CD  MDXX      1
SEC (18-19)   25    1   7953.33   969.36  1.1465  0.9924  0.9339  2209.34   497.2    31.280    0.000   CFG MDXX  CD  MDXX      1
                  F I N A L    E N G I N E    P E R F O R M A N C E
                  -------------------------------------------------
 BPR(1) RMIX(1) GAINMX(1) ANGMIX(1)    BPR(2) RMIX(2) GAINMX(2) ANGMIX(2)
23.4983  1.1107  0.0000     0.0000     0.0000  0.0000  0.0000     0.0000

   FG      FRAM     WFE   FARST   EPR     WAENG    WACOR    RCOA    FNR1   FNGF
 8193.2  7281.2   910.5 .06775  0.934  540.745  521.872    7.54    872. 1.0000

   FN      SFC      WFT    FHV   NODISS   EFFTH     FN/WA  EFFOA   WFTR1  WFTGF
  912.0  0.9984   910.5 18550.    0     0.1256   1.6865 0.7637    862. 1.0000

WARNING: TABLE(S) EXTRAPOLATED. NON-ZERO NSI(S).

NPTOT = 48      NP1 = 16      NP2 = 16      NP3 = 16

FMT1
(/,2F10.0,F10.2,2F10.1,3F10.2,/,F10.1,2F10.3,F10.4,2F10.1,     ,          2F10.2
IPUNCH =    412         1      1385       450      1251      1553       827
           1178       734       122       123       530      1287      1257
            797      1148
 NAMES =  CASE       ALT        XM      DTAMB     V-KTAS  YCOMPD15   PAMB
         T-AMB(R)  HPX(3)   BLD(9)    BLD(10)    ERAM      WD(1)    WCOR(1)
           P(1)      T(1)


      23.      1500.      0.39       0.0      256.7      0.00     13.92    513.32
    100.2      0.032     0.000    0.9950      540.7     521.9     15.38    528.96


FMT2
(F10.2,4F10.1,F10.2,F10.4,F10.2,/,8F10.2,)
IPUNCH =    314       651       665      1557      1323      1556      1558
            901       895       888      1174      1167        30        23
           1313      1306
 NAMES =  BPR(1)     FG       F-RAM   YCOMPD19   WFT      YCOMPD18  YCOMPD20
          RC-OA     R(25)     R(18)     T(27)     T(20)   AREA(27)  AREA(20)
          WD(27)    WD(20)

    23.50     8193.2    7281.2     852.0     910.5     60.04    1.0687      7.54
     1.15       1.03    515.92   1192.06   2209.34    294.19    518.67     21.54

FMT3
(2F10.1,F10.2,4F10.4,F10.1/F10.3,F10.1,6F10.0,)
IPUNCH =   1459      1448      1157       413       416       415       418
            698      1578       274      1554      1554      1554      1554
           1554      1554
 NAMES =  XN(14)    XN(3)     T(10)    CD-18     CFG-19    CD-8      CFG-9
          HP(1)   YCOMPD40 BLDP(9)  YCOMPD16 YCOMPD16 YCOMPD16 YCOMPD16
        YCOMPD16 YCOMPD16

   1156.3     9568.5   1940.70    0.9339    0.9924    0.9269    0.9919    1320.3
    0.995       50.9    99999.    99999.    99999.    99999.    99999.    99999.
```

```
TERMAP (VER 12)  TITLE=  NASA LOW NOISE MODEL (FLOW SCALE DOWN OF MDXX BPR=14 SHORT BYP DUCT MODEL)        DATE= 05-26-92 CASE=  24.0
(CMS  04-06-92) STITLE= SEA LEVEL, 0.20 MN,  ? ,  FN=1000 LBS                                              TIME= 16:15:20 PAGE=    30

   ALT    PAMB   TAMBF  TAMBR  DTAMB DTAMTP PRELHM  KTAS   KCAS    XM     RPR   DEFF    ERAM    P1     T1R   DEFTIP ERAMTP  PTIP  TTIPR
    0. 14.696  59.00 518.67    0.0    0.0    0.0  132.3  132.2  0.200  1.023 0.9950 0.9950 15.036 522.83 0.0000 0.0000  0.000    0.0

(N) ID    NSI    T-R       P      W-COR      W        R        EFF       FAR       AREA   XMN      PS     THETA  DELTA     H     SF-N,1  (N)
--- --    ---    ---       -      -----      -        -        ---       ---       ----   ---      --     -----  -----     -     ------  ---
 1 FAN      0   522.8   15.036  418.357  426.333  1.0297  0.8146  0.00000      0.0  0.000    0.000  1.008  1.023  124.95  1.0191    1
 2 DELP     0   528.2   15.483   17.444   18.212  0.9990  0.0000  0.00000    384.3  0.077   15.420  1.018  1.054  126.24  0.2349    2
 3 HPC      0   528.2   15.468   17.461   18.212  6.0658  0.7434  0.00000      0.0  0.000    0.000  1.018  1.053  126.24  1.0241    3
 4 COOL     0  1000.1   93.828    3.592   16.516  0.0000  0.0000  0.00000      0.0  0.000    0.000  1.928  6.385  241.02  0.0000    4
 5 DELP     0  1000.1   93.828    3.592   16.516  1.0000  0.0000  0.00000     23.7  0.269   89.286  1.928  6.385  241.02  0.0000    5
 6 DELP     0  1000.1   93.828    3.592   16.516  0.9740  0.0000  0.00000     20.6  0.314   87.723  1.928  6.385  241.02  0.4000    6
 7 HX C     0  1000.1   91.386    3.294   14.749  1.0000  0.0000  0.00000     26.7  0.216   88.512  1.928  6.218  241.02  0.0000    7
 8 BURN     0   991.5   91.386    3.279   14.749  0.9785  0.9990  0.00000     26.5  0.216   88.502  1.912  6.218  238.86  0.6799    8
 9 COOL     0  1915.4   89.425    4.722   14.952  0.0000  0.0000  0.01373      0.0  0.000    0.000  3.693  6.085  489.12  0.0000    9
10 HPT      0  1864.1   89.425    5.053   15.904  3.9169  0.8962  0.01290      0.0  0.000    0.000  3.512  6.085  474.26  1.0046   10
11 PWRK     0  1378.8   22.831   16.691   15.904  0.0000  0.0000  0.01290      0.0  0.000    0.000  2.658  1.554  341.67  0.0007   11
12 COOL     0  1371.2   22.831   17.311   16.540  0.0000  0.0000  0.01240      0.0  0.000    0.000  2.644  1.554  339.50  0.0000   12
13 DELP     0  1344.8   22.831   18.125   17.487  0.9980  0.0000  0.01172    196.0  0.161   22.434  2.593  1.554  332.30  0.1163   13
14 LPT    220  1344.8   22.785   18.393   17.487  1.5193  0.8687  0.01172      0.0  0.000    0.000  2.555  1.550  332.30  1.0003   14
15 COOL     0  1223.8   14.996   26.323   17.487  0.0000  0.0000  0.01172      0.0  0.000    0.000  2.359  1.020  300.58  0.0000   15
16 DELP     0  1222.4   14.996   26.482   17.603  0.9995  0.0000  0.01164    406.6  0.112   14.868  2.357  1.020  300.19  0.0609   16
17 COOL     0  1222.4   14.989   26.496   17.603  0.0000  0.0000  0.01164      0.0  0.000    0.000  2.357  1.020  300.20  0.0000   17
18 NOZZ   110  1217.3   14.989   26.687   17.766  1.0199  0.0000  0.01153      1.0  0.000    0.000  2.347  1.020  298.86  0.0000   18
19  TH8     0  1211.0   14.696   27.147   17.766  1.0199  0.0000  0.01153    294.2  0.170   14.702  2.335  1.000  297.22  1.0000   19
20  EX9     0  1211.0   14.696   27.147   17.766  1.0000  0.0000  0.01153    294.2  0.170   14.696  2.335  1.000  297.22  0.0000   20
--- --    ---    ---       -      -----      -        -        ---       ---       ----   ---      --     -----  -----     -     ------  ---
21 COOL     0   528.2   15.483  390.921  408.121  0.0000  0.0000  0.00000      0.0  0.000    0.000  1.018  1.054  126.24  0.0000   21
22 DELP     0   528.2   15.483  390.921  408.121  0.9990  0.0000  0.00000   3500.0  0.193   15.088  1.018  1.054  126.24  0.0378   22
23 HX H     0   528.2   15.468  391.299  408.121  1.0000  0.0185  0.00000   3500.0  0.193   15.073  1.018  1.053  126.24  0.0000   23
24 DELP     0   528.6   15.468  391.420  408.121  1.0000  0.0000  0.00000   3500.0  0.193   15.072  1.019  1.053  126.32  0.0000   24
25 NOZZ   110   528.6   15.468  391.420  408.121  1.0526  0.0000  0.00000      1.0  0.000    0.000  1.019  1.053  126.32  0.0000   25
26 TH18     0   520.9   14.696  408.980  408.121  1.0526  0.0000  0.00000   2733.7  0.272   14.696  1.004  1.000  124.48  1.0000   26
27 EX19     0   520.9   14.696  408.980  408.121  1.0000  0.0000  0.00000   2733.7  0.272   14.696  1.004  1.000  124.48  0.0000   27
--- --    ---    ---       -      -----      -        -        ---       ---       ----   ---      --     -----  -----     -     ------  ---

S 1= RC-OA  =     6.2401 : S 2=EMAP(7) =    -8.6662 : S 3= EFF(23)=     0.0185

Y 1=      0.8154= COMP POLY EFF AT STATION  1                              : Y16=99999.0000=          0.000000 -            0.000000 +99999.0000
Y 2=      0.7984= COMP POLY EFF AT STATION  3                              : Y17=     0.7725=           P(25)  -   PS(26)            +     0.0000
Y 3= 1404.4761=            T(10)   -           459.669922 +     0.0000 : Y18=    22.7416=          YCOMPD17 *           29.440002 +     0.0000
Y 4=  132.5823=            H(10)   -     H(11)             +     0.0000 : Y19= 1000.0088=            FN     - YCOMPD18             +     0.0000
Y 5=   37.7515=          YCOMPD 4 / THETA 10               +     0.0000 : Y20=     0.7290=           WFE     / YCOMPD19             +     0.0000
Y 6=   31.7166=            H(14)   -     H(15)             +     0.0000 : Y21=    22.8654=            T(1)   **           0.500000 +     0.0000
Y 7=   12.4117=          YCOMPD 6 / THETA 14               +     0.0000 : Y22=     1.5207=          YCOMPD21 /    P(1)             +     0.0000
Y 8=    1.3061=           RNI(14) /            0.379900 +     0.0000 : Y23=   648.3186=          YCOMPD22 *   WD(1)             +    -0.0000
Y 9= 1946.2302=          XNMAP 14 *           42.203995 +     0.0000 : Y39=     1.0607=            V-19   /   V-9               +     0.0000
Y10=    1.5986=          THETA 14 **           0.500000 +     0.0000 : Y40=     0.9950=          0.000000 -            0.000000 +     0.9950
Y11= 3111.1514=          YCOMPD 9 * YCOMPD10               +     0.0000 : Y41=     3.9236=           HP(14)  *            0.005000 +     0.0000
Y12=   10.0137=           FAR(9)  -            0.000000 +    10.0000 : Y42=     0.3269=            T(24)  -     T(23)             +     0.0000
Y15=    0.0000=          0.000000 -            0.000000 +     0.0000 : Y43= 4307.7344=            XN(1)  *            4.490000 +     0.0000

T 1=  375.0002  X=YCOMPD15 Z=           W=          ID=03/11/91 E=2 : T 3=     0.1055  X=RMAP(14) Z=XNMAP 14 W=          ID=LPT X MN E=3
T 2= 2733.6594  X=  XM      Z=XNMAP   1 W=          ID=BYP AREA E=1 : T 4=     0.9950  X=YCOMPD23 Z=  XM     W=          ID=INLETREC E=1

P 1=YCOMPD41--> HPX(1)  : P 4=YTABLE 4--> DEFF

     --VARY-- ---HI--- ---LO---  (+)   OBJECT = TARGET   (+) LIM
C19= AREA(26)  2817.00  2183.00 1.00  AREA(26) YTABLE 2 0.00 L=1

MODE=YCOMPD19  PLA=  1000.000  ADDPLA=    0.000  PLA LIMIT= PLA
IDES=0  NVAR=10  MAX ERR# 9= 19.PS+A/P+A = 0.00021  MATRX= 2  LOOP= 21
IOMT  LOOPS=  1  MAX ERROR =        0.      = 0.00000

                     B L E E D S    A N D    L E A K A G E S
                     -----------------------------------------
      FR - TO %W(FR)  %W(1)      W     T-R      P       H   DH/DHT :      FR - TO %W(FR)  %W(1)       W     T-R      P        H   DH/DHT
B 3=   3 - 12 0.0520 0.0022    0.947  860.5  61.052  206.58 0.7000 : B 7=  3 - OB 0.0000 0.0000    0.000  813.5  52.059  195.11 0.6000
B 5=   3 - 17 0.0090 0.0004    0.164  647.6  27.378  154.94 0.2500 : B 9=  3 - OB 0.0321 0.0014    0.585  766.3  43.964  183.63 0.5000
 STA   3 TOTL 0.0931 0.0040    1.696

      FR - TO %W(FR)  %W(1)      W     T-R      P       H   DH/DHT :      FR - TO %W(FR)  %W(1)       W     T-R      P        H   DH/DHT
B 1=   6 -  9 0.0577 0.0022    0.953 1000.1  91.386  241.02 1.0000 : B 6=  6 - 21 0.0000 0.0000    0.000 1000.1  91.386  241.02 1.0000
B 2=   6 - 11 0.0385 0.0015    0.636 1000.1  91.386  285.16 1.0000 : B 8=  6 - OB 0.0038 0.0001    0.063 1000.1  91.386  241.02 1.0000
B 4=   6 - 15 0.0070 0.0003    0.116 1000.1  93.217  241.02 0.2500
 STA   6 TOTL 0.1070 0.0041    1.767

      FR - TO %W(FR)  %W(1)      W     T-R      P       H   DH/DHT
B10=  22 - OB 0.0000 0.0000    0.000  528.2  15.468  126.24 1.0000
 STA  22 TOTL 0.0000 0.0000    0.000

                    C O M P O N E N T    P E R F O R M A N C E
                    -------------------------------------------
  N  ID       BETA       XN       XN-MAP       HP    HPX/PHP  SF(N.2)    W-MAP  EFF-MAP    R-MAP   SMRELL    FLOW ID    EFF ID  MAPTYP
  1 FAN     1.0206    959.407     35.053    780.79     3.92    0.0000  391.967   0.7993   1.0405   58.626  QUIETENG  QUIETENG      1
  3 HPC     1.0243   9127.031     79.561   2843.78   100.20    0.0000   28.314   0.7259   5.6055   30.316    0.  0.    0.  0.      1
 10 HPT     0.0000   9127.031    101.151   2943.60    39.72    0.0000    0.992   0.8921   3.3366    6.235  JAN.2690  JAN.2690      1
 14 LPT     0.0000    959.407     46.115    784.71     0.00    0.0000    0.814   0.8654   1.5193    4.641  ANALYTIC  ANALYTIC      1
 14 LPT                      RNISF(1,14),(2,14),(3,14),(4,14)=  1.00149  1.00355  1.00000  1.00000

                       N O Z Z L E    P E R F O R M A N C E
                       -------------------------------------
 NOZZLE      (N)  TYP      FG         FN       RJ     CFG      CD     AREA(TH)  V-EXIT  SF(TH.2) SF(EX.2)   CFGT ID    CDT ID  MAPTYP
PRI (8-9)    18    1     156.96      30.55   1.0199  0.9918  0.9263    294.19   286.6     3.884     0.000  CFG MDXX  CD  MDXX     1
SEC (18-19)  25    1    3824.99     992.20   1.0526  0.9919  0.9286   2733.66   304.0    36.243     0.000  CFG MDXX  CD  MDXX     1
                 F I N A L    E N G I N E    P E R F O R M A N C E
                 -------------------------------------------------
 BPR(1) RMIX(1) GAINMX(1) ANGMIX(1)     BPR(2) RMIX(2) GAINMX(2) ANGMIX(2)
22.4095  1.0320  0.0000    0.0000       0.0000  0.0000  0.0000    0.0000

    FG     FRAM     WFE   FARST   EPR    WAENG    WACOR    RCOA    FNR1   FNGF
 3982.0  2959.2   729.0 .06775  0.997  426.333  418.357    6.24   1000. 1.0000

    FN     SFC      WFT    FHV   NODISS   EFFTH    FN/WA  EFFOA   WFTR1  WFTGF
 1022.8  0.7128   729.0 18550.    0     0.0952   2.3989 0.7423    710. 1.0000

WARNING: TABLE(S) EXTRAPOLATED. NON-ZERO NSI(S).

NPTOT = 48      NP1 = 16      NP2 = 16      NP3 = 16

FMT1
(/,2F10.0,F10.2,2F10.1,3F10.2,/,F10.1,2F10.3,F10.4,2F10.1,      ,         2F10.2
IPUNCH =    412         1      1385       450      1251      1553       827
           1178       734       122       123       530      1287      1257
            797      1148
 NAMES =   CASE      ALT         XM     DTAMB    V-KTAS  YCOMPD15   PAMB
         T-AMB(R)  HPX(3)   BLD(9)   BLD(10)     ERAM     WD(1)   WCOR(1)
            P(1)      T(1)


      24.        0.       0.20       0.0      132.3      0.00     14.70    518.67
    100.2     0.032      0.000    0.9950      426.3     418.4     15.04    522.83


FMT2
(F10.2,4F10.1,F10.2,F10.4,F10.2,/,8F10.2,)
IPUNCH =    314       651       665      1557      1323      1556      1558
            901       895       888      1174      1167        30        23
           1313      1306
 NAMES =   BPR(1)     FG      F-RAM   YCOMPD19   WFT      YCOMPD18 YCOMPD20
           RC-OA     R(25)    R(18)     T(27)     T(20)   AREA(27) AREA(20)
           WD(27)    WD(20)

    22.41    3982.0    2959.2    1000.0     729.0     22.74    0.7290      6.24
     1.05      1.02    520.86   1211.02   2733.66    294.19    408.12     17.77

FMT3
(2F10.1,F10.2,4F10.4,F10.1/F10.3,F10.1,6F10.0,)
IPUNCH =   1459      1448      1157       413       416       415       418
            698      1578       274      1554      1554      1554      1554
           1554      1554
 NAMES =   XN(14)    XN(3)     T(10)    CD-18    CFG-19    CD-8      CFG-9
            HP(1)  YCOMPD40 BLDP(9)  YCOMPD16 YCOMPD16 YCOMPD16 YCOMPD16
         YCOMPD16 YCOMPD16

    959.4    9127.0   1864.15    0.9286    0.9919    0.9263    0.9918     780.8
    0.995      44.0    99999.    99999.    99999.    99999.    99999.    99999.
```

REPORT DOCUMENTATION PAGE

Form Approved
OMB No. 0704-0188

Public reporting burden for this collection of information is estimated to average 1 hour per response, including the time for reviewing instructions, searching existing data sources, gathering and maintaining the data needed, and completing and reviewing the collection of information. Send comments regarding this burden estimate or any other aspect of this collection of information, including suggestions for reducing this burden, to Washington Headquarters Services, Directorate for Information Operations and Reports, 1215 Jefferson Davis Highway, Suite 1204, Arlington, VA 22202-4302, and to the Office of Management and Budget, Paperwork Reduction Project (0704-0188), Washington, DC 20503.

1. AGENCY USE ONLY (*Leave blank*)	2. REPORT DATE	3. REPORT TYPE AND DATES COVERED
	November 2003	Final Contractor Report

4. TITLE AND SUBTITLE

Ultra High Bypass Ratio Low Noise Engine Study

5. FUNDING NUMBERS

WBS–22–781–30–12
NAS3–25950, Task Order 5

6. AUTHOR(S)

W.N. Dalton III

7. PERFORMING ORGANIZATION NAME(S) AND ADDRESS(ES)

Allison Gas Turbine Division
General Motors Corporation
Indianapolis, Indiana 46206–0420

8. PERFORMING ORGANIZATION REPORT NUMBER

E–14085

9. SPONSORING/MONITORING AGENCY NAME(S) AND ADDRESS(ES)

National Aeronautics and Space Administration
Washington, DC 20546–0001

10. SPONSORING/MONITORING AGENCY REPORT NUMBER

NASA CR—2003-212523
Allison EDR 16083

11. SUPPLEMENTARY NOTES

Project Manager, Dennis Huff, Structures and Acoustics Division, NASA Glenn Research Center, organization code 5940, 216–433–3913.

12a. DISTRIBUTION/AVAILABILITY STATEMENT

Unclassified - Unlimited
Subject Category: 07 Distribution: Nonstandard

Available electronically at http://gltrs.grc.nasa.gov

This publication is available from the NASA Center for AeroSpace Information, 301–621–0390.

12b. DISTRIBUTION CODE

13. ABSTRACT ***(Maximum 200 words)***

A study was conducted to identify engine cycle and technologies needed for a regional aircraft which could be capable of achieving a 10 EPNdB reduction in community noise level relative to current FAR36 Stage 3 limits. The study was directed toward 100-passenger regional aircraft with engine configurations in the 15,000 pound thrust class. The study focused on Ultra High Bypass Ratio (UHBR) cycles due to low exhaust jet velocities and reduced fan tip speeds. The baseline engine for this study employed a gear-driven, 1000 ft/sec tip speed fan and had a cruise bypass ratio of 14:1. A revised engine configuration employing fan and turbine design improvements are predicted to be 9.2 dB below current takeoff limits and 12.8 dB below current approach limits. An economic analysis was also done by estimating Direct Operating Cost (DOC).

14. SUBJECT TERMS

Engine noise reduction; Turbofan engines; Ultra high bypass ratio; Fans; Aerodynamics; Aeroacoustics

15. NUMBER OF PAGES

188

16. PRICE CODE

17. SECURITY CLASSIFICATION OF REPORT	18. SECURITY CLASSIFICATION OF THIS PAGE	19. SECURITY CLASSIFICATION OF ABSTRACT	20. LIMITATION OF ABSTRACT
Unclassified	Unclassified	Unclassified	