NASA/TM—2002-212095 AIAA–2003–7362

The Revamping of an Ignition Test Facility

Kimberly A. Kearns
Glenn Research Center, Cleveland, Ohio

December 2002

The NASA STI Program Office . . . in Profile

Since its founding, NASA has been dedicated to the advancement of aeronautics and space science. The NASA Scientific and Technical Information (STI) Program Office plays a key part in helping NASA maintain this important role.

The NASA STI Program Office is operated by Langley Research Center, the Lead Center for NASA's scientific and technical information. The NASA STI Program Office provides access to the NASA STI Database, the largest collection of aeronautical and space science STI in the world. The Program Office is also NASA's institutional mechanism for disseminating the results of its research and development activities. These results are published by NASA in the NASA STI Report Series, which includes the following report types:

- TECHNICAL PUBLICATION. Reports of completed research or a major significant phase of research that present the results of NASA programs and include extensive data or theoretical analysis. Includes compilations of significant scientific and technical data and information deemed to be of continuing reference value. NASA's counterpart of peer-reviewed formal professional papers but has less stringent limitations on manuscript length and extent of graphic presentations.

- TECHNICAL MEMORANDUM. Scientific and technical findings that are preliminary or of specialized interest, e.g., quick release reports, working papers, and bibliographies that contain minimal annotation. Does not contain extensive analysis.

- CONTRACTOR REPORT. Scientific and technical findings by NASA-sponsored contractors and grantees.

- CONFERENCE PUBLICATION. Collected papers from scientific and technical conferences, symposia, seminars, or other meetings sponsored or cosponsored by NASA.

- SPECIAL PUBLICATION. Scientific, technical, or historical information from NASA programs, projects, and missions, often concerned with subjects having substantial public interest.

- TECHNICAL TRANSLATION. English-language translations of foreign scientific and technical material pertinent to NASA's mission.

Specialized services that complement the STI Program Office's diverse offerings include creating custom thesauri, building customized databases, organizing and publishing research results . . . even providing videos.

For more information about the NASA STI Program Office, see the following:

- Access the NASA STI Program Home Page at ***http://www.sti.nasa.gov***

- E-mail your question via the Internet to help@sti.nasa.gov

- Fax your question to the NASA Access Help Desk at 301–621–0134

- Telephone the NASA Access Help Desk at 301–621–0390

- Write to:
  NASA Access Help Desk
  NASA Center for AeroSpace Information
  7121 Standard Drive
  Hanover, MD 21076

NASA/TM—2002-212095 AIAA–2003–7362

The Revamping of an Ignition Test Facility

Kimberly A. Kearns
Glenn Research Center, Cleveland, Ohio

Prepared for the
41st Aerospace Sciences Meeting and Exhibit
sponsored by the American Institute of Aeronautics and Astronautics
Reno, Nevada, January 6–9, 2003

National Aeronautics and
Space Administration

Glenn Research Center

December 2002

Acknowledgments

Thank you to Roger Scheman, Joe Zoeckler, Luke Ogorzaly, Chris Hegedus, Paul Asmondy, Karl Hagelin, and the outstanding crew members at the Research Combustion Laboratory who are too numerous to mention.

This report is a preprint of a paper intended for presentation at a conference. Because of changes that may be made before formal publication, this preprint is made available with the understanding that it will not be cited or reproduced without the permission of the author.

Trade names or manufacturers' names are used in this report for identification only. This usage does not constitute an official endorsement, either expressed or implied, by the National Aeronautics and Space Administration.

The Aerospace Propulsion and Power Program at NASA Glenn Research Center sponsored this work.

Available from

NASA Center for Aerospace Information
7121 Standard Drive
Hanover, MD 21076

National Technical Information Service
5285 Port Royal Road
Springfield, VA 22100

Available electronically at http://gltrs.grc.nasa.gov

THE REVAMPING OF AN IGNITION TEST FACILITY

Kimberly A. Kearns
National Aeronautics and Space Administration
Glenn Research Center
Cleveland, Ohio 44135

ABSTRACT

The revamping of an Ignition Test Facility, located in the Research Combustion Laboratory at the NASA Glenn Research Center, is presented. The history of how the test cell has adapted efficiently to a variety of test programs is discussed. The addition of a second test stand for ignition and small-scale rocket testing is detailed. An overview of the facility and the current test programs is offered. Planned upgrades for the future are outlined.

INTRODUCTION

During the spring of 2000, a decision was made to construct an ignition and small-scale rocket test stand at an Ignition Test Facility located in the Research Combustion Laboratory (RCL) at the NASA Glenn Research Center. This new stand would be constructed next to an existing test stand as part of the refurbishment of Cell 21.

The major drivers for this decision were to increase testing throughput and add flexibility by operating two test stands with interchangeable fuel and oxidizer supplies. The additional test stand, Stand B, built along side the original, was needed to support an upcoming three-year test program, the Pulse Detonation Engine Testbed (PDE). This test program needed a semi-permanent home due to the varied phases of the PDE testbed and the length of time the PDE hardware would exist in the test cell. The original test stand, Stand A, used for all previous testing, was being setup to support a Ceramic Rocket Engine (CRI), and could be used for other short-term programs. By expanding and revamping the test cell, the desire was to continue to do ignition work, but also to support research in small thrusters, combustion technology, and advanced materials applications. By adding more fuels, oxidizers, gases and liquids, and increasing flow rate capacity, it was hoped Cell 21 could support a multiple combination of programs.

Cell 21 has a long history of supporting widely varying research programs, seldom running the same fuels or oxidizers from test to test. Adapting the cell to a variety of test programs led to many quick changes, crossed actuation lines, and ad hoc installations. The electrical inputs and outputs, and control panel circuits also were used and reused for multiple research programs. The current renovation of the cell was designed to eliminate the discontinuous systems created by the past programs and to end the cannibalization of circuits and installations and make engineering future systems easier.

HISTORY

Cell 21 is an older test cell, built forty to fifty years ago, originally designed to be a Rocket Thruster Test Facility. In the mid-80s, the cell was gutted, and a small vacuum chamber was installed, along with an altitude exhaust system, low-flow gaseous oxygen (GOX) and low-flow gaseous hydrogen (GH_2) feed systems. A small RP–1 (kerosene) system was also implemented. The plan was to perform ignition work at altitude conditions; in reality, only a few programs used the altitude capability. Other systems began to spring up around these: metallized propellant (MP) and carbon monoxide ignition. Then a purged laser equipment room was built inside the cell for spray characterization studies and plume analysis. This was dismantled later to make room for the Combustion Wave Ignition (CWI) and eventually the X–33 ignition system test.

The X–33 program required significant changes to the cell. A 30-gallon liquid nitrogen (LN_2)-bath jacketed liquid oxygen (LOX) run tank along with a 30-gallon liquid hydrogen (LH_2) system were installed. The test rig itself was located outdoors behind the cell. Many actuation valves needed to be relocated or have new actuation lines run to them.

After the X–33 ignition system program was completed, the single test stand was built up to support a torch igniter test using LOX and ethanol. Because of the low LOX flow rates and run pressures, and a need for close-coupled, conditioned LOX at the igniter, a small 1800-cc run tank was mounted directly to the stand, as seen in Figure 1. The tank exterior was wrapped with LN_2 coolant coils with the LOX lines extending through an LN_2 bath (approx. 1.8 gallons).

Insulation material then was wrapped around the coolant coils. The small run tank was filled from a 50-gallon LOX dewar at 50 psig installed adjacent to the now disconnected 30-gallon LN_2-bath jacketed run tank. The rest of the X–33 rig eventually was dismantled, but not before parts of the system were stripped and reused for the LOX/Ethanol test.

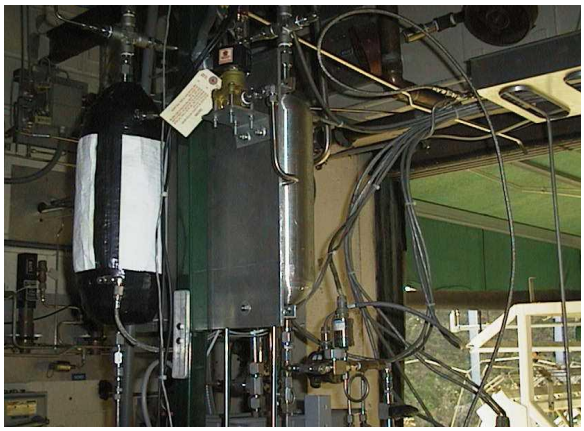

Figure 1.—LOX/Ethanol run tanks on stand; the X–33 ignition rig can be seen outside the door.

The original stand in Cell 21 was part of the vacuum chamber. The LOX/Ethanol test was mounted on a mobile cart stand in front of this fixed stand. See Figure 2. The CRI test, using LOX and gaseous methane, was designed to demonstrate the fabrication and operation of a rocket engine made of ceramic materials. This test was to start before a new stand would be needed and was designed to use several of the existing components left from the LOX/Ethanol program. As a result, the cart was left in place. A new fixed stand was built in its place as time permitted. The CRI test originally built up on the cart was relocated to the permanent stand.

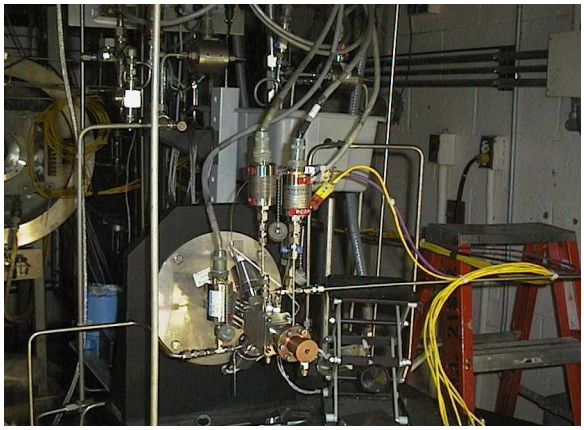

Figure 2.—LOX/Ethanol and altitude ignition stands.

MODIFICATION REQUIREMENTS

To increase testing throughput, Cell 21 was modified to provide two sea level test stands, Stand A and Stand B. Figure 3 shows the layout of the test cell. Original objectives included re-introducing several past capabilities and introducing new capabilities. The desire was to do ignition work, but also to support research in small thrusters, combustion technology, and advanced materials applications.

Some of the specific goals were to add more fuels (RP-1(kerosene) and gaseous methane), and more oxidizers (such as revamping the large LOX tank), re-introduce a pump-driven water system, build a permanent LN_2 station, and install larger regulators and larger line sizes for GOX and GH_2.

The test rigs were separated from the facility valves by a steel bulkhead. The test stand was designed so that all valves considered facility valves, main purges, main vents, main shutoff valves, venturis, and a bank of solenoids to run these valves, were installed on the facility-side of the bulkhead. All oxidizers and fuels have a shut off valve at the supply, another shut off valve behind the bulkhead in the test cell, and then an optional fire valve located on the test stand to service the test article.

The test stand, any specialized test article electronics, and solenoids to operate the fire valves, were installed on the test stand side of the bulkhead. Any resulting piping modifications required for specific test programs would be made on this side of the bulkhead, minimizing the changes required to get the next test operational. The feed lines, valves and venturi stations were installed on the facility side of the bulkhead, with the goal being to keep all systems up to the bulkhead permanent. The gaseous nitrogen (GN_2) purge systems were located between the two test stands to keep from having duplicate systems.

NEW TEST STAND DESIGN

Test Stand A was designed to support testing with GH_2, GOX, LOX, gaseous methane and liquid RP-1. Test Stand B initially was designed to support only GH_2 and "air", provided by bringing GOX and nitrogen to the stand and mixing them. The new bulkhead was designed with a doorway through it to allow personnel access to both stands. Both stands were located far enough from the rear overhead roll-up door to allow for portable test stands to be placed in front of either of them. An existing bulkhead located

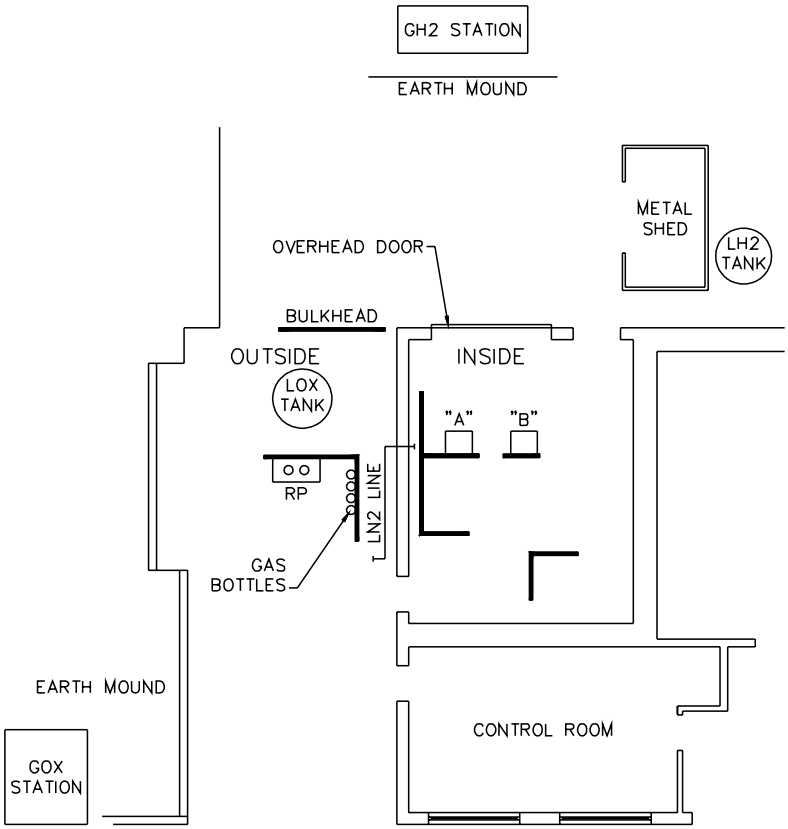

Figure 3.—Test cell layout.

outside by the LOX tank remains in place. A new bulkhead was installed to support the methane and RP–1 fuel tanks. Figures 4 and 5 show the views behind and in front of the bulkhead, respectively.

FACILITY OVERVIEW

Tube trailers, pressurized to 2400 psig, supply the GOX and GH_2. The GH_2 tank contains 70,000 SCF (1.98 million standard liters) and the GOX tank contains 50,000 SCF (1.4 million standard liters). Figure 6 shows a simplified schematic of a gas feed system. Each supply line splits at the outside wall of the test cell into three lines that supply the shutoff valves behind the bulkhead. All six lines use dome-loaded pressure regulators to deliver a constant pressure to a critical flow orifice or venturi. Relief valves protect all six lines and are set depending on program. The lines continue through the sidewall of the test cell and run to the supply shutoff valve behind the bulkhead. The smaller two lines for both the oxygen and hydrogen, including vent valves, are located on the bulkhead behind Test Stand A. The larger size lines for both the hydrogen and oxygen, including vent valves, are located on the bulkhead behind Test Stand B.

Traditionally, the secondary legs are considered the medium range lines, and with 3/8" tubing and regulators with Cv = 1.3, are used the most. The third legs have been recently installed and are the largest; these lines contain larger regulators

Figure 4.-New bulkhead looking from the facility side.

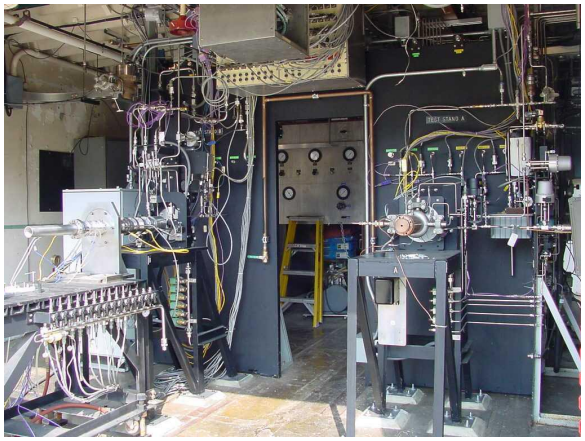

Figure 5.—Test stands B and A looking from the outside in.

(Cv = 3.3) and ¾" lines. The primary legs are usually reserved for ignition, pressurization or other specialized needs. They are also 3/8" lines and regulators with Cv = 0.46.

Each of the three line sizes supplies either Stand A or Stand B; the lines run to both stands but only one is active at a time. Each line has one supply shutoff valve behind the bulkhead. The switch between Test Stand A and Test Stand B is accomplished by resetting an elbow in the line downstream of the valve to operate one test stand or the other.

The PDE is currently installed on Stand B. The objective of the PDE Program is to establish the feasibility of PDE based Hybrid-Cycle and Combined-Cycle propulsion systems to meet NASA's Aviation and Space Access goals. The PDE program started in March 2001. This program required re-introduction of GH_2 into the cell and a large flow rate of "air". Due to the researcher's requirements to run oxygen-rich at times, it was decided to combine GN_2 (at 0.62 lbm/sec) and GOX (at 0.18 lbm/sec) from the existing tube trailers to achieve the desired airflow of 0.80 lbm/sec. This was accomplished by utilizing the larger line sizes installed for both hydrogen and oxygen. By adding a tee off the nitrogen building supply (used for actuation and purging), nitrogen was supplied to the cell using one of the hydrogen legs.

In addition to the gaseous methane, which was used to support the CRI testing, the bottle rack located outside the test cell could be used for other gaseous fuels as well. As seen in Figure 3, the rack is located adjacent to Cell 21 and can hold four cylinders. It is separated from the cell by a steel bulkhead and aligned parallel with the sidewall of Cell 21.

A LOX storage dewar and the large run tank from the X–33 program are located outdoors, adjacent to the cell. These are separated from the gaseous fuel and RP–1 tanks by another steel bulkhead. The small accumulator-size LOX run tank was retained from the LOX/Ethanol program and is located adjacent to the test hardware inside the cell.

Table 1.—Maximum Flow Rates of Fuels and Oxidizers

	Maximum flow rate, (lbm/s)
Liquid Hydrogen	0.3
Liquid Oxygen	2.0
Gaseous Hydrogen	0.3
Gaseous Oxygen	1.0
Ethanol	0.1
Gaseous Methane	0.5
RP–1	0.5

All feed systems are protected from over-pressurization by relief valves and are designed to fail-safe in the event of an emergency shutdown or power failure. A manually-operated CO2 system provides fire protection for the stands. The test cell is equipped with various combustible gas detectors with alarms. In addition, there is one low-oxygen alarm to warn the operator if a large leak or LN_2 boil-off should create an asphyxiation hazard. A large overhead door is opened during testing and a roof-mounted ventilation fan is run continuously during testing.

Current fuels and oxidizers and their maximum flow rates are shown in Table 1. These limits are defined by the goals of the cell. Past research programs have used other fuels such as carbon monoxide, aluminum powder, and gelled RP–1/aluminum. Capability still exists to resuscitate some of these systems in a reasonable timeframe.

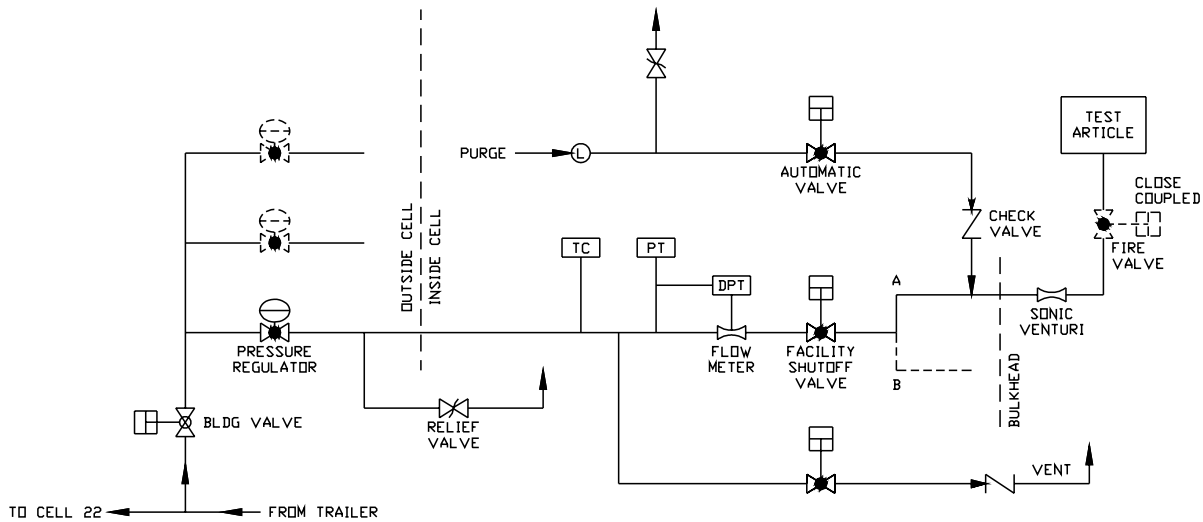

Figure 6.—Gas feed system.

The gaseous tube trailers mentioned previously are shared with the adjacent facility, Cell 22, on an alternating basis. This means that only one of these cells can run at a time. Control panel power also is shared. However, during the off-run days, each cell is accessible while the other cell is running.

ELECTRONIC SYSTEMS

Controls, Instrumentation, & Data Acquisition

Automatic valve operation and data trigger control reside in the Modicon Quantum Programmable Logic Controller (PLC). The current PLC operates with an overall scan rate less than 10 mSec, which allows discrete output timing resolution to 0.01 second. There are three 10-slot racks for Input/Output (I/O), with a total I/O capability in excess of 600 points.

Typical instrumentation includes strain gage pressure transducers; Type T (copper-constantan), Type K (chromel-alumel), Type E (chromel-constantan) thermocouples; turbine flow meters; silicon diode temperature sensors; and photographic recording. An automatic abort system consists of ten-channel analog comparator circuitry with a response time of less than 30 mSec.

The cell data acquisition system is configured for 128 channels of data acquisition programmed with Labview™ Version 5.1. It uses National Instruments Signal Conditioning extensions for Instrumentation (SCXI™) chassis architecture and features 8th order lowpass elliptical signal conditioning modules. The Labview™ program is configured for zeroing, maximum engineering unit, and zero offset calibrations for increased accuracy. It currently supports 500 Hz data recording rate per channel with capabilities to 1 kHz with channel number limitations and polynomial post-processing. An instrument patching system allows versatility of displays such as digital panel meters and 16-channel chart recorders for trend analysis. Figure 7 shows a simplified instrumentation block diagram.

Post-processing of raw data from the acquisition system is available on separate PCs coded in Visual Fortran. An Excel-based user interface is used for creating spreadsheets and graphing functions.

Within the past year, and for temporary use with the PDE, a new high-speed data system was introduced into the cell, the Concurrent Computer Corporation Model 740 High Speed Data Acquisition™ system. Prior to this, dynamic pressure transducers required for the PDE testing could only be wired to and recorded on either a spectrum analyzer or oscilloscope. Neither one has the capability to distinguish every detonation peak when running at 45-50 Hz. The Concurrent can support a 950 MHz sampling rate per channel at either a 16-channel or 32-channel set. The PDE program required the use of five channels.

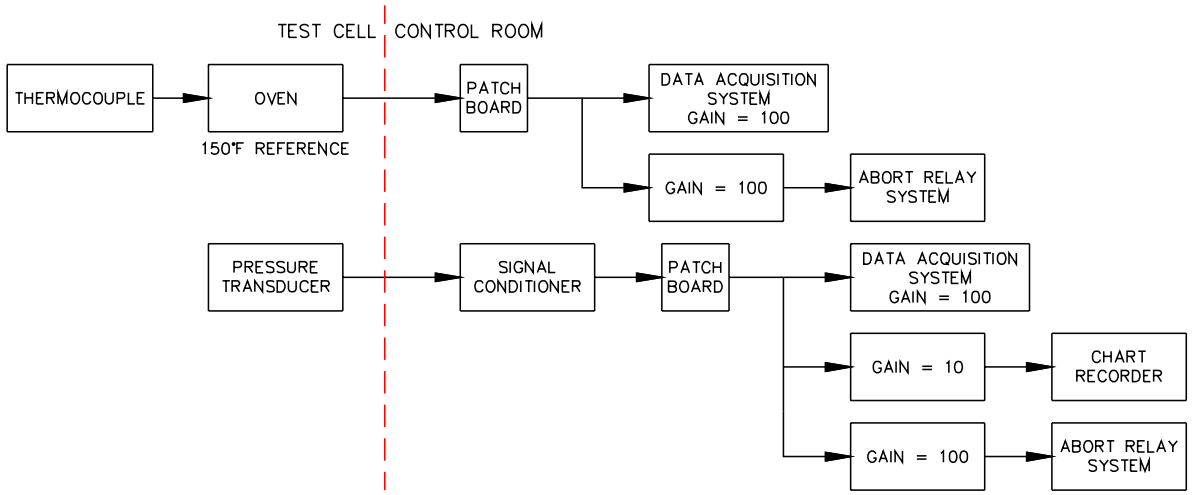

Figure 7.—Instrumentation block diagram.

The Concurrent system uses two UNIX computers. The first computer is used to provide high-speed data acquisition. The system hardware consists of a 32-channel high-speed data acquisition board, a timing board, a UNIX file system hard drive, and a multi-drive disk system. Proprietary software applications to perform the data acquisition within a shell window are accessed via scripts. The PLC controller sends a trigger signal to start the actual acquisition process once the system is armed. The multi-drive disk system is used to allow high data streaming storage data during the capture phase in a binary format. Once capture activity is completed, a script is run automatically to convert the data to a format that can be stored on a standard hard drive containing a standard UNIX file system.

The second computer is a dual 700 MHz INTEL™ processor PC with 512 MB of RAM running a version of the Linux operating system and X windows. Its purpose is to display the captured data using the MATLAB™ software application by depicting the data in time history graphical format. The Linux system is networked to the data computer via the NFS protocol. A menu presented within a shell window on the Linux PC is used to invoke a data scan arm and trigger command on the PowerMAX™ computer. Another script is run to start a Java process once the data capture is complete. The Java process uses a proprietary library command set to access the data file and convert the format into one acceptable to MATLAB™. MATLAB™ uses standard plot routines within its toolboxes and libraries to display the data for review and/or to print a hard copy.

Specialized Controls

During the LOX/Ethanol testing, a Variable Ignition System (VIS)™, manufactured by Unison Industries, was procured to vary the valve and spark timing and the spark exciter frequency and energy levels. The version of PLC in place at the time could not provide the desired time resolution for the control sequence. Overall, the control capability needed to facilitate a rapid 80-millisecond startup and 8-millisecond shutdown response of the igniter. Run devices controlled were the LOX valve, ethanol valve, and the spark. The variable ignition system operates from a computer program loaded on a PC located in the Control Room. The exact timing program gets downloaded to a unit in the test cell prior to firing the engine.

A variation of the Unison spark exciter system was procured for the PDE test on Stand B. This system was necessary because of the high-speed action required of the hydrogen and air valves, in addition to the spark. The current PLC system in use for timing other valves in and out could not produce the quick cycle time required for the PDE firing. Valves can be activated as many times as is necessary within a single period, and it is possible to spark more than once within the same period. However, the system always requires a charging time before all spark events. One spark plug is installed on the hardware and fired at the cycle rate of the device (~35 Hz). Spark energy is 500 mJ per spark. See Figure 8.

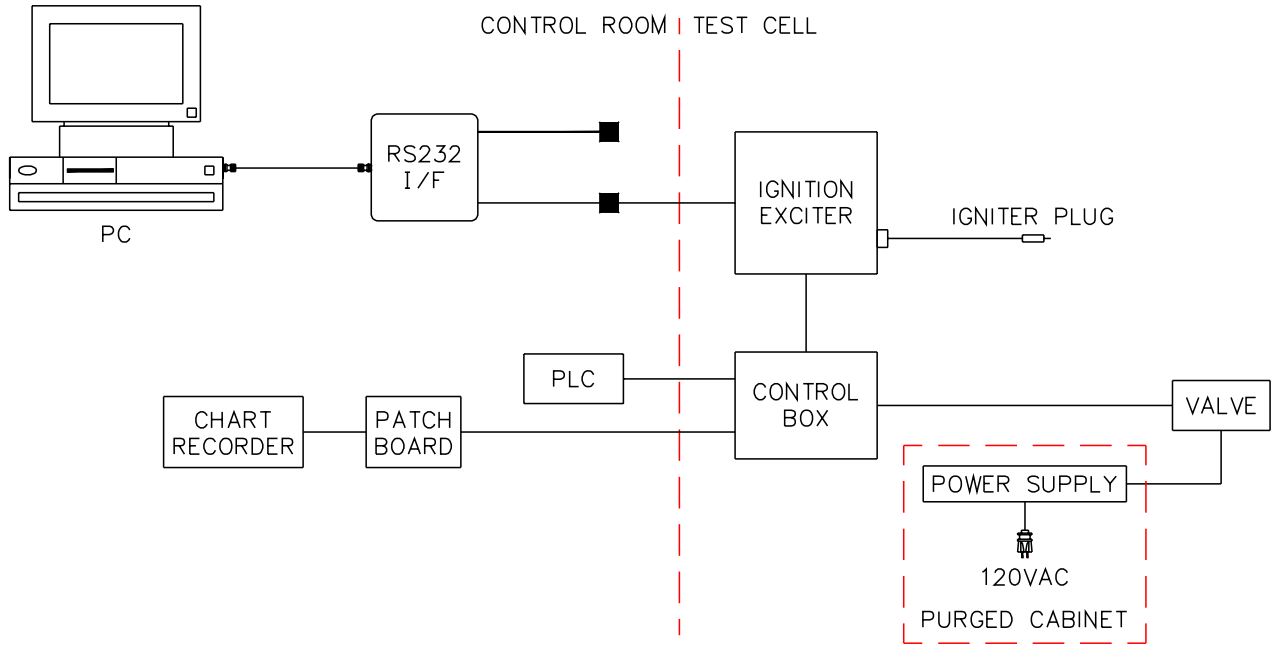

Figure 8.—Ignition system block diagram.

Power supplies, which are installed in a purged cabinet in the test cell and enabled by a pushbutton on the control console, supply the power for the high-speed valves. They are 24VDC power supplies, but are adjusted to supply approximately 8-9VDC. This is the voltage range that yielded optimal valve performance at 35 Hz. The 120VAC power to the power supplies is applied at the start of a run cycle and is shut off one second into the post-run cycle. The Unison spark power supply can supply 3kV to the spark plug.

The Unison's timing sequence is programmed on a PC using proprietary development software. The sequence then is downloaded to the controller unit installed in the cell on the PDE test stand. After the download and prior to hitting the START button on the control console, the operator passes control to the Unison by keying in 'GO' on the PC. In this state, the Unison waits for a 'RUN/GO' signal from the PLC. The PLC output is 24VDC. A circuit in the cell converts this signal into a low trigger 'RUN' command, which initiates the programmed run sequence. The 'RUN' signal is fed into the PDE Valve Interface Box that is mounted above the test stand.

While the Unison is sequencing, a series of hexadecimal digits appears on the PC running the Unison software. These digits represent the voltage levels divided by 10 at the time immediately preceding the spark event. If the system is working properly these codes should be between E6-E3.

There is a 'SPARK CONFIRMATION' signal that is fed out of the PDE Valve Interface Box and displayed on the chart recorder. This signal means that the Unison charged for the spark event. It is possible, however, that the system charged, but a spark did not take place because of a malfunctioning spark plug.

CURRENT TEST PROGRAMS

Stand A

Ceramic Engine

CRI originally consisted of three phases: Phase I: Ceramic Rocket Injector (CRI); Phase II: Ceramic Rocket Chamber and Nozzle; Phase III: Combined Ceramic Rocket Injector, Chamber, and Nozzle. Each of these phases will be described below.

In the first phase of this effort, two rocket engine injectors of standard designs (triplet and co-axial) were to be fabricated out of silicon nitride (Si_3N_4) and tested with a copper heat sink engine. The propellants are LOX (0.224 lbm/sec) and gaseous methane (0.064 lbm/sec). The faceplate of the co-axial injector will be porous, and between 5 to 10 percent of

the methane will flow through the face to provide cooling.

The research hardware is a good match for a Mars ascent engine, one potential beneficiary of this technology. The chamber pressure is set at 200 psia. Sea level thrust is between 50 and 100 lbf that is well within the capabilities of Cell 21.

Phase I Test Plans have each injector tested at several mixture ratios in addition to the nominal value of 3.5. Depending on the success of tests at nominal pressure, a few tests at chamber pressures up to 300 psia and thrust up to 110 lbf may also be conducted. Initial duration of individual tests will be 3 seconds, but later test durations will be stretched to the limits of the heat sink chamber and nozzle.

After successful demonstration of the injector, original Phase II plans were to fabricate a Si_3N_4 chamber and nozzle and to test with a metal injector. Test conditions were to be similar to those in Phase I. Phase III will fabricate a one-piece rocket engine, where the injector, chamber, and nozzle are an integral Si_3N_4 piece.

The initial injector was fabricated using a layer technique. The chamber/nozzle configuration was being fabricated using a mold-cast technique. However, significant effort has been expended on connecting and sealing the ceramic injector to a metal chamber; a skill/technique not needed for the final objective. Meanwhile, progress has been made in fabricating a Si_3N_4 injector using the mold-and-cast technique. If this technique can be used for the relatively complex injector, then the testing will progress directly to the single component engine test originally planned for Phase III.

Stand B

On Test Stand B, the PDE testbed has served as a platform for additional test series: the PDE Ejector, an RP–1 Combustion Wave Ignition (CWI), a liquid hydrocarbon (HC) PDE experiment, and the current PDE NOx Sampling Testing. Each of these testing series will be described below.

PDE Ejector

The PDE Ejector test uses the existing C21 PDE as the unsteady driver. The initial tests were single detonations, followed by short multiple detonation firings, and building up to the desired longer durations.

The test hardware was connected to the last section of existing PDE in the “short” configuration (the one used for higher detonation frequencies) and, at 42 inches in length, terminated just short of the existing test cell roll-up door. A new smooth wall PDE tube section was fabricated for use as the driver “nozzle”. Movable ramps were placed inside a rectangular pressure housing to form the ejector contour. A fixed pressure was maintained upstream of the ejector throat using GN_2 supplied from a 70,000 cubic foot temporary tube trailer station, located in the alleyway outside. The GN_2 was fed to the ejector through 50 feet of 1-1/2” Sch 40 pipe.

A 3-foot square thrust plate and 200-lbf load cell were mounted just outside the test cell roll-up door and bolted to the concrete pad. The maximum design flow for the ejector was 8.2 lbm/sec of GN_2, plus the 0.82 lbm/sec of PDE exhaust produced at 35 Hz.

After configuring the ejector for a given test and setting up the facility for PDE operation, the GN_2 ejector flow supply was set up manually. Flow traveled through the ejector prior to the start of the test. A newly acquired water pump was installed in the cell to supply the necessary cooling for the dynamic transducers, although the pump was never utilized due to the shortened run times. This test also required the use of absolute pressure transducers on the GN_2 line. A vacuum pump was brought in each day to calibrate them.

RP–1/CWI and HC PDE

Both the RP–1/CWI and HC PDE phases of the PDE testing used RP–1 and GOX. The objective of the RP–1/CWI test series was demonstrate the production of nearly simultaneous ignition sources at two physically separated locations using GOX and liquid RP–1 as the oxidizer and fuel. The objective of the HC PDE test series was a low cost effort to provide repetitive detonations using a hydrocarbon fuel.

The RP–1 was fed to the cell using a newly installed 9-gallon run tank and 5 feet of 3/8" piping. The RP–1 run tank was pressurized by a newly installed Tescom regulator, using an existing loader. The maximum flow rate of RP–1 is 0.05 lbm/sec. The run tank is located outside, adjacent to Cell 21. It is separated from the cell by a steel bulkhead.

Maximum use was made of existing PDE testbed, PDE hardware, instrumentation, and control systems. The test article was a modification of the existing PDE testbed. The current injector configuration

was removed and replaced with an injector head assembly.

At the top of the injector head assembly, a modified commercial fog nozzle was mounted by brazing. It was used to produce a very fine spray of RP–1. A cross member on the nozzle provided connections for the GOX and RP–1 feed lines. High-speed pressure transducers (PCB™s) were used to detect detonation/deflagration speeds to verify proper operation of the device. Three existing Flodyne valves used during the PDE baseline testing controlled the flow of RP–1 to the device.

For the RP–1/CWI test series, straight detonation tubes were attached to the new injector head assembly. These tubes were subsequently removed for the HC PDE portion of the program.

PDE NOx Sampling Testing

The purpose of the current PDE NOx sampling testing is to assess pollutant formation in a PDE using accepted sampling practices. The setup includes a sampling oven, a two-channel nitrogen oxides analyzer, and a vacuum pump to be installed in what used to be a storage shed in the back of the test cell. No new fuels or oxidizers are required for this phase of testing, but the shed does need to have the electrical power modified and a 30' heated line run to it for the sample collecting.

Due to the number of new valves that need to be controlled during the sampling process, WonderWare InTouch™ will be introduced into the cell for valve control.

OBSERVATIONS

The existence of two test stands in Cell 21 with interchangeable fuel and oxidizer supplies has proven to be very successful. One stand is home to a long-term program while shorter-term programs occupy the other stand. Both test stands have been active at the same time even though they were not designed to run at the same time. This gives the test cell a lot of unforeseen versatility

The PDE program continues on Stand B and is being built-up to support the next phase of testing. Stand A has been modified to checkout a Coupon Degradation Injector (CDI) program to be done in Cell 22 eventually. From CRI to CDI, very few changes or modifications were needed. CDI is running GOX, GH_2, and is using a hydrogen/oxygen spark igniter. The methane bottles from CRI were disconnected and relocated and the regulator was reconnected to the medium-range hydrogen line. On the oxygen side, the LOX tank was disconnected and the GOX used as the pressurizing agent is now the oxidizer.

The use of both test stands at the same time added flexibility to the cell as well. By juggling the like systems from one stand to the other, testing on Stand A one day then Stand B the next became possible. The oxygen igniter purge was "borrowed" from the CRI test on Stand A to purge the RP–1 system on Stand B during the last phase of PDE testing. Additionally, the loader used to operate the hydrogen igniter system on Stand A was put into service to operate the RP–1 regulator on Stand B. The ease with which the purge and loader were swapped back and forth on corresponding test days from the PDE CWI test on Stand B to the CDI test on Stand A meant a substantial number of active test days for the cell.

When the two test stands were erected, the intent was to eliminate the sharing of circuits and minimize the cross-use of actuation lines. It is hoped that reusing existing systems installed for one purpose to operate differing systems can be eliminated. As long as like systems operate like systems, purges stay purges, and the solenoids on the test stand stay dedicated to the test stand, the discontinuous systems of the past will no longer be the operating norm.

The FUTURE

The phased approach of the current expansion of the test cell continues. The RP–1 system has been brought back into service ahead of schedule. Stand B can operate GOX, GH_2, RP–1, simulated "air", and the altitude exhaust system, originally installed for ignition systems testing, is still functional. In February 2002, the altitude ejectors were reinstated to support a test feasibility exercise. The vacuum chamber has been removed and put in storage, but plans are being developed to reintroduce this capability.

Stand A currently supports GOX, GH_2, LOX, gaseous methane, and ethanol. The LH_2 system that was disconnected after the X–33 currently is being revamped and reconnected for future use. Reinstallation of the larger LOX tank pressurization components and longer duration test programs are on the list of improvements as well.

In addition, evaluation and upgrade of the CO_2 fire suppression system is needed. Improvements planned for the entire RCL are replacement of the central liquid CO_2 tank; completion of new telephone

system; and new signs for the barricades with updated phone numbers and improved communications instructions

Other plans for the test cell include replacement of existing pressure control hardware with state-of-the-art equipment, control room changes and control panel reorganization, and expanding the use of WonderWare InTouch™.

WonderWare InTouch™ is slowly being incorporated into the cell. Initially, InTouch™ will be used primarily for controlling hardware associated with the PDE NOx Sampling testing. As time permits, the plan is to remove most of the hardware control consoles in Cell 21's control room and implement valve operation and data trigger control using InTouch™. It is anticipated that InTouch™ will save time, money, and control room space allowing Cell 21 to improve its versatility and functionality even further.

REFERENCES

Green, J. M., "A Versatile Rocket Engine Hot Gas Facility", AIAA–94–2487, June, 1994.

Galecki, D.L., "Ignition and Combustion of Metallized Propellants", AIAA–89–2883, July, 1989.

REPORT DOCUMENTATION PAGE

Form Approved
OMB No. 0704-0188

Public reporting burden for this collection of information is estimated to average 1 hour per response, including the time for reviewing instructions, searching existing data sources, gathering and maintaining the data needed, and completing and reviewing the collection of information. Send comments regarding this burden estimate or any other aspect of this collection of information, including suggestions for reducing this burden, to Washington Headquarters Services, Directorate for Information Operations and Reports, 1215 Jefferson Davis Highway, Suite 1204, Arlington, VA 22202-4302, and to the Office of Management and Budget, Paperwork Reduction Project (0704-0188), Washington, DC 20503.

1. AGENCY USE ONLY (*Leave blank*)

2. REPORT DATE
December 2002

3. REPORT TYPE AND DATES COVERED
Technical Memorandum

4. TITLE AND SUBTITLE
The Revamping of an Ignition Test Facility

5. FUNDING NUMBERS
WBS–22–708–48–04

6. AUTHOR(S)
Kimberly A. Kearns

7. PERFORMING ORGANIZATION NAME(S) AND ADDRESS(ES)
National Aeronautics and Space Administration
John H. Glenn Research Center at Lewis Field
Cleveland, Ohio 44135–3191

8. PERFORMING ORGANIZATION REPORT NUMBER
E–13747

9. SPONSORING/MONITORING AGENCY NAME(S) AND ADDRESS(ES)
National Aeronautics and Space Administration
Washington, DC 20546–0001

10. SPONSORING/MONITORING AGENCY REPORT NUMBER
NASA TM—2002-212095
AIAA–2003–7362

11. SUPPLEMENTARY NOTES
Prepared for the 41st Aerospace Sciences Meeting and Exhibit sponsored by the American Institute of Aeronautics and Astronautics, Reno, Nevada, January 6–9, 2003. Responsible person, Kimberly A. Kearns, organization code 7555, 216–433–3145.

12a. DISTRIBUTION/AVAILABILITY STATEMENT
Unclassified - Unlimited
Subject Category: 20 Distribution: Nonstandard
Available electronically at http://gltrs.grc.nasa.gov
This publication is available from the NASA Center for AeroSpace Information, 301–621–0390.

12b. DISTRIBUTION CODE

13. ABSTRACT ***(Maximum 200 words)***

The revamping of an Ignition Test Facility, located in the Research Combustion Laboratory at the NASA Glenn Research Center, is presented. The history of how the test cell has adapted efficiently to a variety of test programs is discussed. The addition of a second test stand for ignition and small-scale rocket testing is detailed. An overview of the facility and the current test programs is offered. Planned upgrades for the future are outlined.

14. SUBJECT TERMS
Test facilities; Cryogenic rocket propellants; Low thrust propulsion; Ignition systems; Test stands; Ground tests; X–33 reusable launch vehicle; RP–1 rocket propellants; Flow velocity; Research facilities

15. NUMBER OF PAGES
16

16. PRICE CODE

17. SECURITY CLASSIFICATION OF REPORT
Unclassified

18. SECURITY CLASSIFICATION OF THIS PAGE
Unclassified

19. SECURITY CLASSIFICATION OF ABSTRACT
Unclassified

20. LIMITATION OF ABSTRACT