NASA/TM—2000-210368

Effect of Roller Profile on Cylindrical Roller Bearing Life Prediction

Joseph V. Poplawski
J.V. Poplawski and Associates, Bethlehem, Pennsylvania

Erwin V. Zaretsky
Glenn Research Center, Cleveland, Ohio

Steven M. Peters
J.V. Poplawski and Associates, Bethlehem, Pennsylvania

August 2000

The NASA STI Program Office . . . in Profile

Since its founding, NASA has been dedicated to the advancement of aeronautics and space science. The NASA Scientific and Technical Information (STI) Program Office plays a key part in helping NASA maintain this important role.

The NASA STI Program Office is operated by Langley Research Center, the Lead Center for NASA's scientific and technical information. The NASA STI Program Office provides access to the NASA STI Database, the largest collection of aeronautical and space science STI in the world. The Program Office is also NASA's institutional mechanism for disseminating the results of its research and development activities. These results are published by NASA in the NASA STI Report Series, which includes the following report types:

- TECHNICAL PUBLICATION. Reports of completed research or a major significant phase of research that present the results of NASA programs and include extensive data or theoretical analysis. Includes compilations of significant scientific and technical data and information deemed to be of continuing reference value. NASA's counterpart of peer-reviewed formal professional papers but has less stringent limitations on manuscript length and extent of graphic presentations.

- TECHNICAL MEMORANDUM. Scientific and technical findings that are preliminary or of specialized interest, e.g., quick release reports, working papers, and bibliographies that contain minimal annotation. Does not contain extensive analysis.

- CONTRACTOR REPORT. Scientific and technical findings by NASA-sponsored contractors and grantees.

- CONFERENCE PUBLICATION. Collected papers from scientific and technical conferences, symposia, seminars, or other meetings sponsored or cosponsored by NASA.

- SPECIAL PUBLICATION. Scientific, technical, or historical information from NASA programs, projects, and missions, often concerned with subjects having substantial public interest.

- TECHNICAL TRANSLATION. English-language translations of foreign scientific and technical material pertinent to NASA's mission.

Specialized services that complement the STI Program Office's diverse offerings include creating custom thesauri, building customized data bases, organizing and publishing research results . . . even providing videos.

For more information about the NASA STI Program Office, see the following:

- Access the NASA STI Program Home Page at ***http://www.sti.nasa.gov***

- E-mail your question via the Internet to help@sti.nasa.gov

- Fax your question to the NASA Access Help Desk at (301) 621-0134

- Telephone the NASA Access Help Desk at (301) 621-0390

- Write to:
  NASA Access Help Desk
  NASA Center for AeroSpace Information
  7121 Standard Drive
  Hanover, MD 21076

NASA/TM—2000-210368

Effect of Roller Profile on Cylindrical Roller Bearing Life Prediction

Joseph V. Poplawski
J.V. Poplawski and Associates, Bethlehem, Pennsylvania

Erwin V. Zaretsky
Glenn Research Center, Cleveland, Ohio

Steven M. Peters
J.V. Poplawski and Associates, Bethlehem, Pennsylvania

Prepared for the
2000 Annual Meeting
sponsored by the Society of Tribologists and Lubrication Engineers
Nashville, Tennessee, May 7–11, 2000

National Aeronautics and
Space Administration

Glenn Research Center

August 2000

Available from

NASA Center for Aerospace Information
7121 Standard Drive
Hanover, MD 21076
Price Code: A03

National Technical Information Service
5285 Port Royal Road
Springfield, VA 22100
Price Code: A03

Available electronically at http://gltrs.grc.nasa.gov/GLTRS

Effect of Roller Profile on Cylindrical Roller Bearing Life Prediction

Joseph V. Poplawski
J.V. Poplawski & Associates
Bethlehem, Pennsylvania

Erwin V. Zaretsky
National Aeronautics and Space Administration
Glenn Research Center
Cleveland, Ohio

Steven M. Peters
J.V. Poplawski & Associates
Bethlehem, Pennsylvania

Four roller profiles used in cylindrical roller bearing design and manufacture were analyzed using both a closed form solution and finite element analysis (FEA) for stress and life. The roller profiles analyzed were flat, tapered end, aerospace, and fully crowned loaded against a flat raceway. Four rolling-element bearing life models were chosen for this analysis and compared. These were those of Weibull, Lundberg and Palmgren, Ioannides and Harris, and Zaretsky. The flat roller profile without edge loading has the longest predicted life. However, edge loading can reduce life by as much as 98 percent. The end tapered profile produced the highest lives but not significantly different than the aerospace profile. The fully crowned profile produces the lowest lives. The resultant predicted life at each stress condition not only depends on the life equation used but also on the Weibull slope assumed. For Weibull slopes of 1.5 and 2, both Lundberg-Palmgren and Iaonnides-Harris equations predict lower lives than the ANSI/ABMA/ISO standards. Based upon the Hertz stresses for line contact, the accepted load-life exponent of 10/3 results in a maximum Hertz stress-life exponent equal to 6.6. This value is inconsistent with that experienced in the field.

SYMBOLS

A	material-life factor
C	dynamic load capacity, N (lbf)
c	critical shear stress-life exponent
d	roller diameter, m (in.)
e	Weibull slope
F	probability of failure, fraction or percent
$f(x)$	probability of survival function
h	exponent
L	life, number of stress cycles or hr
L_A	adjusted life, number of stresses cycles or hr
L_{IH}	adjusted life based on fatigue limit, number of stress cycles or hr
L_{10}	10-percent life or life at which 90 percent of a population survives, number of stress cycles or hr
L_β	characteristic life or life at which 63.2 percent of a population fails, number of stress cycles
l_f	roller flat length, m (in.)
l_L	total length of raceway, m (in.)
l_r	effective roller length, m (in.)

l_t	total roller length, m (in.)
N	life, number of stress cycles
n	maximum Hertz stress-life exponent or number of components, elemental volumes
P	normal or equivalent radial load, N, (lbf)
p	load-life exponent
r_c	corner radius, m (in.)
r_r	crown radius, m (in.)
S	probability of survival, fraction or percent
S_{max}	maximum Hertz stress, GPa (ksi)
S_r	residual stress, GPa (ksi)
V	stressed volume, m^3 ($in.^3$)
x	exponent
X	load, time, or stress
Z	depth to maximum critical shear stress, m (in.)
σ	stress or strength, GPa (ksi)
σ_u	location parameter, GPa (ksi)
σ_{VM}	vonMises stress, GPa (ksi)
τ	critical shear stress, GPa (ksi)
τ_{max}	maximum shear stress, GPa (ksi)
τ_o	orthogonal shear stress, GPa (ksi)
τ_u	fatigue limit, GPa (ksi)

Subscripts

i	i^{th} component or stressed volume
n	number of components or elemental volumes
ref	reference point, stress, volume, or life
sys	system or component probability of survival or life
v	related to stressed volume
β	designates characteristic life or stress

INTRODUCTION

This basis for the ANSI/AFBMA and ISO life predictions (1-3) for cylindrical roller bearings is the theory of G. Lundberg and A. Palmgren (4,5). Their life theory is based upon the work of Weibull (6-8). Subsequently, others have published modifications of Lundberg and Palmgren (4,5). Among these are the theories of Ioannides and Harris (9) and Zaretsky (10-12).

Zaretsky, Poplawski, and Peters (13) comparing the results of the different life theories and discussing their implication in the design and analysis of ball bearings presented a critical analysis. For an inverse ninth-power relation between life and maximum Hertz stress for “point contact” (ball on raceway), the Lundberg-Palmgren theory qualitatively predicts life

best. However, for an inverse 12th power relation between life and maximum Hertz stress, the Zaretsky modified theory is best. Using a "fatigue-limiting stress" such as proposed by Ioannides and Harris (9) without modifying factors significantly over predicts the life of ball bearings (Zaretsky, et al. (13)).

A. Palmgren (14,15) in 1924 suggested a probabilistic approach to predicting the lives of machine components and, more specifically, rolling-elements bearings. On the basis of his test results, he suggested that an acceptable life is defined as the time at which 10 percent of a population of bearings will have failed or 90 percent will have survived. He also noted that there was an apparent size effect on life, that is, larger bearings with the same equivalent load as smaller bearings had shorter lives than the smaller bearings.

From Lundberg and Palmgren (4), the L_{10} life of a bearing can be determined from the equation:

$$L_{10} = [C/P]^p \tag{1}$$

where L_{10} is the bearing life in millions of race revolutions, C is the dynamic load capacity of the bearing or the theoretical load that will produce a life of one-million race revolutions with a 90 percent probability of survival, P is the applied equivalent radial load and p is the load-life exponent.

Predicting the lives of roller bearings is more complex than that of ball bearings. This is because the roller geometry is a variable in the design of these bearings. Because of the deleterious effects on life due to edge loading, the rollers have a full crown or a partial crown rather than a flat roller profile. As a result the Hertz contact in most roller bearings is a hybrid between "line contact" (flat roller profile on a plain) and "point contact." Lundberg and Palmgren (5) state that with line contact between both rings the exponent $p = 4$. They further state that with point contact between both rings the exponent p equal 3. They observe that, as a rule, the contacts between the rollers and the raceways transform from a point to line contact at some load. Accordingly, the load-life exponent p varies from 3 to 4 for different loading intervals within the same roller bearing. In this regard, Lundberg and Palmgren suggest that a suitable value of load-life exponent p is 10/3. They further suggest that it be applied to all cylindrical roller bearings for mixed point and line contact. This value of p has become the accepted value used in the ANSI/ABMA and ISO Standards (1-3).

The relationship between load and maximum Hertz stress is $S_{max} \sim P^x$ where S_{max} is the maximum Hertz stress and x is an exponent. For line contact $x = 2$ and for point contact $x = 3$ (16). Hence, for line contact the theoretical resultant relation between maximum Hertz stress and life is $L \sim S^{-8}_{max}$. Based upon a load-life exponent p of 10/3 and, depending on what assumption is made, the resulting stress-life exponent n can either be 6 2/3 or 10 for line or point contact, respectively. Tests and analysis by Rumbarger and Jones (17) for oscillatory straight needle roller bearings resulted in a load-life exponent of 4, which for those bearings established a Hertz stress-life exponent of 8. However, there is no controlled data that is published to establish with reasonable certainty the correct value of the Hertz stress-life exponent for cylindrical roller bearings. From Parker and Zaretsky (18) for point contact, values of the Hertz stress-life exponent experimentally range from 8.4 to 12.4.

Jones (19) recognized that defining the state of stress in a roller-race contact is difficult. As a result, in his computer program he segmented the roller into thin slices. He calculated the Hertz stress in each segment by treating the segment as a thin roller. However, Jones (19) does not relate the Hertz stresses in the contact to life but uses a 4th power load-life exponent. Hence, the predictive life is not reflective of the actual stresses in the bearing.

As was discussed by Zaretsky et al. (13), varying the Hertz stress-life exponent n can significantly affect bearing life predictions. For roller bearings, a 20-percent variation in Hertz stress can result in a nearly a two to one difference in life prediction depending on whether an exponent of 6 2/3 or 10 was selected in the calculations. Conversely, if a load-life relation is used independent of stress, a similar variation can occur between the actual life and the predicted value. For a given load, different roller geometries result in significantly different Hertz stresses and thus life. Both Lundberg and Palmgren (4,5) and Jones (19), which is based upon Lundberg and Palmgren under predict roller bearing life.

In view of the aforementioned discussion, the objectives of the work reported herein were the following:

(1) Determine the three dimensional volumetric stress field between a square roller with different crown profiles and a flat raceway using finite element analysis.
(2) Evaluate and compare the various life theories for cylindrical roller bearings with different roller geometry.
(3) Determine what effect the presumption of a fatigue limit has on cylindrical roller bearing life prediction.

LIFE THEORIES

Weibull Equation

Fracture Strength—In 1939 W. Weibull (6,7) published two papers that describe a statistical approach to determine the strength of solids. Weibull postulated that the dispersion in material strength for a homogeneous group of test specimens could be expressed according to the following relation:

$$\ln \ln(1/S) = e \ln\left[X / X_\beta\right] \tag{2}$$

where $X = \sigma$ and $X_\beta = \sigma_\beta$ (see Appendix A).

Equation (2) relates specimen survival S to the fracture (or rupture) strength σ. When ln ln(1/S) is used as the ordinate and ln σ as the abscissa and fracture (and fatigue) data are assumed to plot as a straight line. The slope (tangent) of this line is referred to as the Weibull slope or Weibull modulus usually designated by the letter e or m. The plot itself is referred to as a Weibull plot.

By using a Weibull plot, it becomes possible to estimate a cumulative distribution of an infinite population from an extremely small sample size. The Weibull slope is indicative of the dispersion of the data and its density (statistical) distribution. Weibull slopes of 1, 2, and 3.57 are indicative of exponential, Rayleigh, and normal (Gaussian) distributions, respectively (8).

The scatter in the data is inversely proportional to the Weibull slope, that is, the lower the value of the Weibull slope, the larger the scatter in the data and vice versa. The Weibull slope is also liable to statistical variation depending on the sample size (database) making up the distribution (20). The smaller the sample size the greater the statistical variation in the slope.

Weibull (6,7) related the material strength to the volume of the material subjected to stress. If we imagine the solid to be divided in an arbitrary manner into n volume elements, the probability of survival for the entire solid can be obtained by multiplying the individual survivabilities together as follows:

$$S = S_1 \cdot S_2 \cdot S_3 \cdots S_n \tag{3}$$

where the probability of failure F is

$$F = 1 - S \tag{4}$$

Weibull (6,7) further related the probability of survival S, the material strength σ, and the stressed volume V, according to the following relation:

$$\ln \frac{1}{S} = \int_V f(X) dV \tag{5}$$

where

$$f(X) = \sigma^e \tag{6}$$

For a given probability of survival S,

$$\sigma \sim \left[\frac{1}{V}\right]^{1/e} \tag{7}$$

From Eq. (7) for the same probability of survival the components with the larger stressed volume will have the lower strength (or shorter life).

Fatigue Life—In conversations with E.V. Zaretsky on January 22, 1964, W. Weibull related how he had suggested to his contemporaries A. Palmgren and G. Lundberg in Gothenburg, Sweden to use his equation to predict bearing (fatigue) life where

$$f(X) = \tau^c N^e \tag{8}$$

and where τ is the critical shear stress and N is the number of stress cycles to failure.

In the past we have credited this relation to Weibull. However, there is no documentation of the above nor any publication to the authors' knowledge of the application of Eq. (8) by Weibull in the open literature. However, in Ref. (13) we did apply Eq. (8) to Eq. (5) where

$$N \sim \left[\frac{1}{\tau}\right]^{c/e}\left[\frac{1}{V}\right]^{1/e} \tag{9}$$

The parameter c/e is the stress-life exponent. This implies that the inverse relation of life with stress is a function of the life scatter or data dispersion.

From Hertz theory V and τ can be expressed as a function of $S_{\max}$ (13) and substituting L for N

$$L = A\left[\frac{1}{\tau}\right]^{c/e}\left[\frac{1}{V}\right]^{1/e} \sim \frac{1}{S_{\max}^{n}} \tag{10}$$

From (13), solving for the value of the exponent n for line contact (roller on raceway) from Eq. (10) gives

$$n = \frac{c+1}{e} \tag{11a}$$

For point contact (ball on raceway)

$$n = \frac{c+2}{e} \tag{11b}$$

It should be noted that before the Lundberg-Palmgren life theory (4) was published, Palmgren (21) had already published Eq. (1) relating bearing life to the inverse of load P to an exponent p. The values for the exponents c and e selected by Lundberg and Palmgren were empirical and made to conform to the values of p previously published by Palmgren. In order to retain the value of p used by Palmgren, the values for the Weibull slope e must be 1.11 and c/e must be 9.3. If these values from Lundberg and Palmgren for c and e are retained, then from Eqs. (11a) and (11b), n equals 10.2 and 11.1 for line and point contact, respectively. (Experience has shown that the Weibull slope e for most bearing fatigue data varies from 1 to 2.)

Using a finite-element analysis (FEA) first used for rolling-element bearings by Ioannides and Harris (9), the computed life of individual stressed volumes can be integrated as follows:

$$\ln\frac{1}{2} \sim N^{e}\int_{V}\tau^{c}\,dV \tag{12}$$

Equation (12) can be rewritten to represent each individual stressed volume and associate stresses as follows:

$$\left[\frac{L_i}{L_{\text{ref}}}\right] = \left[\frac{\tau_{\text{ref}}}{\tau_i}\right]^{c/e}\left[\frac{V_{\text{ref}}}{V_i}\right]^{1/e} \tag{13}$$

where from Eq. (10), the material factor

$$A = L_{ref}\left[\tau_{ref}\right]^{c/e}\left[V_{ref}\right]^{1/e} \tag{14}$$

From Lundberg and Palmgren (4) (see Appendix B) the lives of the individual stressed volumes at a given probability of survival are summarized as follows:

$$\left[\frac{1}{L}\right]^{e} = \sum_{i=1}^{n}\left[\frac{1}{L_i}\right]^{e} \tag{15}$$

By replacing X in Eq. (2) with L, the probability of survival S and the life L can be related to S_{ref} and L_{ref} as follows:

$$S = S_{ref}^{(L_{ref}/L)^e} \tag{16}$$

Lundberg-Palmgren Equation

In 1947, G. Lundberg and A. Palmgren (4) applied Weibull analysis to the prediction of rolling-element bearing fatigue life. The Lundberg-Palmgren theory expressed $f(X)$ in Eq. (5) as

$$f(X) = \frac{\tau^c N^e}{Z^h} \tag{17}$$

where τ is the critical shear stress, N is the number of stress cycles to failure, and Z is the depth to the maximum critical shear stress in a concentrated (Hertzian) contact. From Eqs. (5) and (12)

$$N \sim \left[\frac{1}{\tau}\right]^{c/e} \left[\frac{1}{V}\right]^{1/e} [Z]^{h/e} \tag{18}$$

From Hertz theory (16), V, τ, and Z can be expressed as a function of S_{max}, and substituting L for N

$$L = A\left(\frac{1}{\tau}\right)^{c/e} \left(\frac{1}{V}\right)^{1/e} [\mathrm{Z}]^{h/e} \sim \frac{1}{S_{max}^n} \tag{19}$$

Substituting these values into Eq. (12) and solving for the exponent n for line contact gives

$$n = \frac{c+1-h}{e} \tag{20a}$$

and for point contact

$$n = \frac{c+2-h}{e} \tag{20b}$$

From Lundberg and Palmgren (4), using the values of c and e previously discussed and h = 2.33, then from Eqs. (2a) and (20b), n equals 8.1 and 9 for line and point contact, respectively.

For the Lundberg-Palmgren theory, using a finite-element analysis (FEA), the lives of the individual stressed volumes can be computed as follows:

$$\ln\frac{1}{S} \sim N^e \int_V \frac{\tau^c}{Z^h} dV \tag{21}$$

As was done for Eq. (12), Eq. (21) was rewritten to represent each individual stressed volume and associate stresses as follows:

$$\left[\frac{L_i}{L_{ref}}\right] = \left[\frac{\tau_{ref}}{\tau_i}\right]^{c/e} \left[\frac{V_{ref}}{V_i}\right]^{1/e} \left[\frac{Z_i}{Z_{ref}}\right]^{h/e} \tag{22}$$

where from Eq. (19), the material factor

$$A = L_{\text{ref}}\left[\tau_{\text{ref}}\right]^{c/e}\left[V_{\text{ref}}\right]^{1/e} = \left[Z_{\text{ref}}\right]^{h/e} \tag{23}$$

Using Eq. (15), the lives of the individual stressed volumes are summarized to obtain the component life L.

Ioannides-Harris Equation

Ioannides and Harris (9), using Weibull (6,7) and Lundberg and Palmgren (4,5) introduced a fatigue-limiting stress where from Eq. (5)

$$f(X) = \frac{\left(\tau - \tau_u\right)^c N^e}{Z^h} \tag{24}$$

The equation is identical to that of Lundberg and Palmgren (Eq. (18)) except for the introduction of a fatigue-limiting stress where

$$N \sim \left(\frac{1}{\tau - \tau_u}\right)^{c/e}\left[\frac{1}{V}\right]^{1/e}[Z]^{h/e} \tag{25}$$

Equation (25) can be expressed a function of $S_{\max}$ where

$$L = A\left(\frac{1}{\tau - \tau_u}\right)^{c/e}\left[\frac{1}{V}\right]^{1/e}[Z]^{h/e} \sim \frac{1}{S_{\max}^{n(\tau_u)}} \tag{26}$$

Ioannides and Harris (9) use the same values of Lundberg and Palmgren for e, c, and h. If τ_u equal 0, then the values of the exponent n are identical to those of Lundberg and Palmgren (Eqs. (20a) and (20b)). However, for values of $\tau_u > 0$, n is also a function of $(\tau - \tau_u)$.

Ioannides and Harris (9) using finite element analysis (FEA) integrated the computed life of elemental stress volumes to predict bearing life. Their equation relates each elemental volume as follows:

$$\ln\frac{1}{S} \sim N^e \int_V \frac{\left(\tau - \tau_u\right)^c}{Z^h} dV \tag{27}$$

Equation (27) can be rewritten to represent each individual stressed volume and associated stresses as follows:

$$\left[\frac{L_i}{L_{\text{ref}}}\right] = \left[\frac{\left(\tau - \tau_u\right)_{\text{ref}}}{\left(\tau - \tau_u\right)_{\text{i}}}\right]^{c/e}\left[\frac{V_{\text{ref}}}{V_i}\right]^{1/e}\left[\frac{Z_i}{Z_{\text{ref}}}\right]^{h/e} \tag{28}$$

If we let $\tau_{\text{ref}} = (\tau - \tau_u)_{\text{ref}}$ then the value of A for Eq. (26) is the same as Eq. (23). The value of A from Eq. (23) is then used to calculate the individual lives for each stressed volume. Using Eq. (15), the lives of the individual stressed volumes are summarized to obtain the component life L.

Zaretsky Equation

Both the Weibull and Lundberg-Palmgren equations above relate the critical shear stress-life exponent c to the Weibull slope e. The parameter c/e thus becomes, in essence, the effective critical shear stress-life exponent, implying that the critical shear stress-life exponent depends on bearing life scatter or dispersion of the data. A search of the literature for a wide variety of materials and for nonrolling-element fatigue reveals that most stress-life exponents vary from 6 to 12. The exponent appears to be independent of scatter or dispersion in the data. Hence, Zaretsky (12) has rewritten the Weibull equation to reflect that observation by making the exponent c independent of the Weibull slope e, where

$$f(X) = \tau^{ce} N^e \tag{29}$$

From Eqs. (5) and (29)

$$N \sim \left[\frac{1}{\tau}\right]^{c}\left[\frac{1}{V}\right]^{1/e} \tag{30}$$

Equation (30) differs from the Weibull Eq. (9) and the Lundberg-Palmgren Eq. (4) in the exponent of the critical stress τ. Zaretsky assumes based upon experience that the value of the stress-exponent $c = 9$. Lundberg and Palmgren (4) assumed that once initiated, the time a crack takes to propagate to the surface and form a fatigue spall is a function of the depth to the critical shear stress Z. Hence, by implication, bearing fatigue life is crack propagation time dependent. However, rolling-element fatigue life can be categorized as "high-cycle fatigue." Crack propagation is an extremely small time fraction for the total life or running time of the bearing. The Lundberg-Palmgren relation implies that the opposite is true. To decouple the dependence of bearing life and crack propagation rate, Zaretsky (13) dispensed with the Lundberg-Palmgren relation of $L \sim Z^{h/e}$ in Eq. (30). (It should be noted that at the time (1947) Lundberg and Palmgren published their theory, the concepts of "high cycle" and "low cycle" fatigue were only then beginning to be formulated.)

Equation (30) can be written as

$$L = A\left(\frac{1}{\tau}\right)^{c}\left(\frac{1}{V}\right)^{1/e} \sim \frac{1}{S_{\max}^{n}} \tag{31}$$

From Ref. (13), solving for the value of the exponent n, for line contact from Eq. (31) gives

$$n = c + \frac{1}{e} \tag{32a}$$

and for point contact

$$n = c + \frac{2}{e} \tag{32b}$$

where $c = 9$ and $e = 1.11$, $n = 9.9$ for line contact and $n = 10.8$ for point contact.

Zaretsky (10) as well as Ioannides and Harris (9) proposed a generalized Weibull-based methodology for structural life prediction that uses a discrete-stressed-volume approach. August and Zaretsky (11) extended this methodology by developing a technique for predicting component life and survivability that is based on finite element stress analysis. Zaretsky, like Ioannides and Harris, integrates the complete life of elemental stressed volumes as follows:

$$\ln\frac{1}{S} \sim N^{e}\int_{V}\tau^{ce}dV \tag{33}$$

And, as with Ioannides and Harris, an elemental reference volume and stress is required. Equation (33) is rewritten as follows:

$$\left[\frac{L_i}{L_{\text{ref}}}\right] = \left[\frac{\tau_{\text{ref}}}{\tau_i}\right]^{c}\left[\frac{V_{\text{ref}}}{V_i}\right]^{1/e} \tag{34}$$

where from Eq. (31), the material factor

$$A = L_{\text{ref}}\left[\tau_{\text{ref}}\right]^{c}\left[V_{\text{ref}}\right]^{1/e} \tag{35}$$

The lives of the individual stressed elements are summarized in accordance with Eq. (15).

Although Zaretsky (12) does not propose a fatigue-limiting stress, he does not exclude that concept either. However, his approach is entirely different from that of Ioannides and Harris (9). For critical stresses less than the fatigue-limiting stress, the life for the elemental stressed volume is assumed to be infinite. Thus, the stressed volume of the component would be affected where $L = 1/V^{1/e}$. As an example, a reduction in stressed volume of 50 percent results in an increase in life by a factor of 1.9.

ROLLER TYPE AND PROCEDURE

Roller Geometry

A schematic of a nonlocating cylindrical roller bearing is shown in Fig. 1. This bearing type allows axial movement of the inner or outer ring to accommodate axial thermal expansion of the shaft and tolerance build up in an assembly. Because roller bearings have greater rolling-element surface area in contact with the inner and outer races, they generally support greater loads than comparably sized ball bearings. Cylindrical roller bearings are designed primarily to carry heavy radial loads. If properly designed, they can be operated with nominal thrust loads of up to 5 percent of their radial load with no apparent degradation of performance.

Although roller bearings support greater loads than ball bearings, roller bearings are more sensitive to misalignment and/or edge loading. The effect of edge loading on "straight" rollers on load or stress profile is shown in Fig. 2. The higher stresses result in reduced bearing life due to rolling-element fatigue. Angular misalignment between the shaft and housing also causes nonuniform stress distribution on the rollers. Poor alignment of the bearings on the shaft is another reason for misaligned inner and outer rings. Moment loading on the shaft can also misalign the bearing. In order to minimize the effect of misalignment and edge loading on bearing life, the rollers are profiled as shown in Fig. 3, usually with a full or partial crown. The effect of a partial crown on load or stress profile is shown in Fig. 2.

The limiting speed of a cylindrical roller depends on roller length-to-diameter ratio, precision grade, roller guidance, cage type and material, type of lubrication, shaft and housing accuracy, and heat dissipation of the overall mounting. For general use, roller dimensions having an effective roller length l_r equal to roller diameter d, referred to as a "square" roller, provides the best balance of load and speed capacities. The speed limitation of a roller bearing having "square" rollers is considered equal to that of a comparable series ball bearing.

In Fig. 3, the roller effective length l_r is the length presumed to be in contact with the races under loading. Generally, the roller effective length can be written as follows:

$$l_r = l_t - 2r_c \tag{36}$$

where r_c is the roller corner radius or the grinding undercut, whichever is larger.

To compare the effect of various roller profiles shown in Fig. 3 on cylindrical roller bearing life prediction, we selected a simple roller-race geometry model for evaluation. The model assumes a plurality of normally loaded 12.7-mm (0.5-in.) diameter rollers running in a linear, raceway having a length l_L. A schematic of the roller-race model is shown in Fig. 4. The effective roller length l_r is equal to the roller diameter, 12.7 mm (0.5 in.). Four roller profiles were studied. These were (a) flat (straight) cylindrical roller with and without edge loading; (b) partially (end) tapered roller profile having a taper angle of 0.20° with a flat length of 8 mm (0.314 in.); (c) aerospace (partially crowned) roller with a flat length of 8 mm (0.314 in.) and a 965-mm (38-in.) radius; and (d) fully crowned roller having a 965-mm (38-in.) crown radius. Three maximum Hertz stresses were chosen for comparisons with each roller geometry. These were nominally 1.4, 1.9, and 2.4 GPa (200, 275, and 350 ksi). The normal loads to produce these stresses were different for each roller profile. The loads, stresses, and dimensions used for each roller profile of Fig. 3 in the roller-race model of Fig. 4 are summarized in Table 1.

Finite Element Stress Analysis and Life Prediction

A three-dimensional, finite-element analysis (FEA) for the geometry of the roller-race model used in the studies (Fig. 4) is shown in Fig. 5. The model geometry takes advantage of the symmetric nature of the Hertzian contact for the case of no significant surface shear stresses or misalignment.

The quarter section of the contact area face was divided into ~162 elements. Element size ranged from 0.0991×0.0330 mm (0.0039×0.0013 in.) to 0.1278×0.03175 mm (0.00503×0.00125 in.) depending on the Hertzian stress level. Element thickness in the depth direction was 0.0254 mm (0.0010 in.) until a depth z/b of about 1.0. Beyond that depth the element thickness was gradually increased. A typical model contained ~3500 to 5900 solid isoparametric elements depending on the Hertz stress. The model for 2.4-GPa (350-ksi) maximum Hertz stress had ~5800 elements and 7000 nodes, giving about 18 000 degrees of freedom after applying constraint boundary conditions. The analysis was performed on a 450-MHz personal computer with the COSMOS/M commercially available FEA software.

We checked the FEA model results against calculated values by using classical Hertz contact stress theory (13). The FEA-predicted principal normal stresses and the in-plane shear stress τ_{45} agreed within 3 percent of theory over the Hertz stress range studied.

Three stress distributions that have been discussed over the years as being the "critical stress" in determining bearing fatigue life. These three stresses were examined as the "stress of choice" within this paper. They were (a) the orthogonal shear stress used by Lundberg and Palmgren; (b) in-plane shear stress τ_{45}; and the Von Mises effective or equivalent stress field. Figure 6(a) shows the three-dimensional orthogonal shear stress field for a aerospace roller with edge loading.

Figure 6(b) shows the corresponding Von Mises stress distribution. A maximum stress of about 0.84 GPa (122 ksi) occurred 0.114 mm (0.005 in.) below the surface for a 1.4-GPa (200-ksi) maximum Hertz stress.

The results of the FEA runs at the three Hertz stresses at each roller profile were saved as databases to be used in evaluating the life theories examined in this paper. For purposes of analysis, only the life of the race will be considered at each load condition. The L_{10} life at 2.4 GPa (350 ksi) for a flat roller geometry assuming no edge loading and using ANSI/ABMA/ISO standards is normalized and assumed to be 1.

The component life and survivability for each of the life equations were predicted using results of the finite-element analysis. By establishing a unit or gage volume V_{ref}, a depth to the gage volume Z_{ref} and a reference stress τ_{ref} all related to a reference life L_{ref}, a material factor A for each of the life equations can be calculated for Weibull, Eq. (14); Lundberg-Palmgren, Eq. (23); Ioannides-Harris, Eq. (23); and Zaretsky, Eq. (35).

By using the appropriate life equations and critical shear stress results and respective elemental volumes from the finite-element analysis, L and S values for each element are computed. Hence, the probability of survival for the entire analysis model can be obtained by using Eq. (3) to multiply the individual survivabilities. By using Eq. (15), the L_{10} life of the component can be determined.

These equations provide relative or normalized values for L and S in relation to reference values chosen from the selected reference element. Generally, reference values of 1.0 and 0.9 are assigned to the L_{ref} and S_{ref} variables, respectively, in the equations. These values imply a relative or normalized life of unity and a probability of survival of 90 percent for the reference element or volume V_{ref}. A reference element or volume can be chosen at random. However, we have primarily used the element with the highest resultant stress at a reference depth below the surface, Z_{ref}. The value of V_{ref} selected by us was 5.32×10^{-14} m^3 (3.244×10^{-9} in.^{3}). The corresponding value of Z_{ref} is 210×10^{-6} m (8.25×10^{-3} in.). The exponent c and the Weibull slope e are parameters specific to the material. For the Weibull, Lundberg-Palmgren, and Ioannides-Harris equations, c = 10.3. For the Zaretsky equation, c = 9. The Weibull slope e is assumed to be 1.11 The exponent h is assumed to be 2.33. Three reference critical stresses τ_{ref} corresponding to V_{ref} were used in the analysis and evaluated. These were the maximum shear stress, τ_{45}; the orthogonal shear stress; and Von Mises stress whose respective values were 0.82 GPa (119 ksi); 0.64 GPa (93.3 ksi); and 1.57 GPa (228.1 ksi). (A primer detailing this methodology is presented in Ref. (22).)

RESULTS AND DISCUSSION

Life Theory Comparison

Using a closed form Hertzian solution (16) and assuming no edge stresses, normal loads were calculated for the flat roller geometry that would produce maximum Hertz stresses of nominally 1.4, 1.9, and 2.4 GPa (200, 275, and 350 ksi). These loads and stresses are summarized in Table 1. Based on these normal loads and the lamina method of Jones (19), the maximum Hertz stresses for the end tapered, aerospace, and crowned roller geometries were determined. For these calculations, the roller diameter and length were both 12.7 mm (0.5 in.). It was assumed that the rollers had no corner radius, that is, the corner radius r_c was zero. The contact width for all the roller profiles was equal to the roller length except for the crowned roller profile at the 4239 N (953 lb) normal load that produced a contact length of 90 percent the roller width.

Weibull Slope (Table 2).—For line and point contact, the maximum Hertz stress-life relationship was determined for the Weibull, Lundberg-Palmgren, Ioannides-Harris, and Zaretsky equations as a function of the Weibull slope or Weibull modulus. These results are summarized in Table 2. The ANSI/ABMA/ISO standards use a load-life exponent p of 10/3 (3.33) for line contact and 3 for point contact. From Lundberg and Palmgren (4) the load-life exponent p for line contact should be 4 that results in a maximum Hertz stress-life exponent n of 8.1 for line contact (see Eq. (20a)). This value of n while low is consistent with available but limited data (13, 18). Based upon the Hertz stresses for line contact and the load-life exponent p of 3.33, results in a value of n equal to 6.6. This is inconsistent with the available database and can account in part for the lower life predictions than that experienced in the field.

Lundberg and Palmgren's justification for a p of 10/3 was that a roller bearing can experience "mixed contact," that is, one raceway can experience "line contact" and the other raceway "point contact" (5). This may be true in limited roller bearing designs but it is certainly not consistent with the vast majority of cylindrical roller and tapered roller bearings designed and used today.

Referring back to the 1945 edition of A. Palmgren's book (21), he uses a value of p = 3 for both point and line contact. The value of p = 3.33 appears to come initially from an unreported database discussed in Palmgren's 1924 paper (14,15).

For mixed contact for a given normal load, the race having point contact will have the lowest life, which will dominate the resultant life of the bearing. The resultant bearing life will be less than the life of the raceway having the point contact. Accordingly, we have calculated that the load-life exponent p in that case will have a value of ~3.3 where the Weibull slope is 1.11. This verifies the recommendation of Lundberg and Palmgren for mixed contacts. However, it is our opinion that the value of p should be not less than 4 for cylindrical roller bearings where line contact occurs on both raceways.

As currently practiced and as discussed above, both the load-life and stress-life relations are based upon the value of the Weibull slope which for rolling-element bearings is assumed to be 1.11. For Lundberg and Palmgren this assumption resulted in their analysis matching preexisting life equations (21) and their nonpublished bearing life database. However, as shown in Table 2, both the load-life and stress-life relations of Weibull, Lundberg and Palmgren, and Ioannides and Harris reflect a strong dependence on the Weibull slope. The existing rolling-element fatigue data reported by Parker and Zaretsky (18) reflect slopes in the range of 1 to 2 and some cases higher or lower. If the slope were factored into the equations then, as shown in Table 2, the stress-life (load-life) exponent significantly decreases with increases in Weibull slope whereby the relation no longer matches reality. Accordingly, the Zaretsky equation that decouples the dependence of the critical shear stress-life relation and the Weibull slope shows only a slight variation of the maximum Hertz stress-life exponent n and Weibull slope. The value of n varies between 9.5 and 9.9 for line contact and 10 and 10.8 for point contact for Weibull slopes between 2 and 1.11.

Life Prediction (Table 3).—It was calculated by us for cylindrical roller bearings comprising rollers having a diameter of 12.7 mm (0.5 in.) and a length of 12.7 mm (0.5 in.) that the dynamic load capacity of these bearings produced maximum Hertz stresses of approximately 3.96 to 4.31 GPa (575 to 625 ksi). Accordingly, a maximum Hertz stress of 4.14 GPa can reasonably be chosen as a representative stress for the dynamic load capacity. Also, the stress of 4.14 GPa (600 ksi) is the highest stress that can be placed on a hardened steel roller-race contact without plastic deformation of the contact.

Applying the four life equations and the ANSI/ABMA/ISO standards to the flat roller geometry and assuming no edge loading, the theoretical lives normalized to a maximum Hertz stress of 4.14 GPa (600 ksi) for each roller geometry was calculated. The relative life results were subsequently normalized to the flat roller geometry based upon the ANSI/ABMA/ISO standards and a maximum Hertz stress of 2.4 GPa (350 ksi). These results are shown in Table 3.

The resultant predicted life at each stress condition strongly depends on the equation used but also the Weibull slope assumed. As we previously discussed, the least variation in predicted life with Weibull slope comes with the Zaretsky equation (Eq. (31)). At all conditions calculated, the ANSI/ABMA/ISO standards result in the lowest lives. Except for the Weibull slope of 1.11 at which the Weibull equation predicts the highest lives, the highest lives are predicted by the Zaretsky equation. For Weibull slopes of 1.5 and 2, both the Lundberg-Palmgren and Ioannides-Harris (where $\tau_u = 0$) equations predict lower lives than the ANSI/ABMA/ISO standards.

Fatigue Limit (Table 4).—As we previously discussed, Ioannides and Harris advocates the use of a fatigue limit τ_u in the Lundberg-Palmgren equation where

$$L_{IH} \approx L\left[\tau/\left(\tau - \tau_u\right)\right]^{c/e} \tag{37}$$

and where L_{IH} is the life with the fatigue limit τ_u, L is the life without a fatigue limit τ_u and τ_o is the critical shearing stress. For a flat roller, assuming no edge loading and a Weibull slope of 1.11, lives were calculated for assumed values of τ_u equal to 138, 276, and 276×10^{-6} GPa (20, 40 and 60 ksi). The results are summarized in Table 4(a). For each value of τ_u of Table 4, a resultant maximum Hertz stress-life exponent, n was calculated. It should be noted that there are no definitive data in the literature to support the existence of a fatigue limit for through hardened bearing steels. However, if a fatigue limit were to exist, the probability of fatigue induced failure in the operating range of most rolling-element bearings would virtually not exist as a practical matter.

The analysis described above was repeated using a finite element analysis (FEA). These results are summarized in Table 4(b). For the FEA results, the predicted lives increased with increases in fatigue limit as with the closed form solution but to a lesser amount. Also, the resultant Hertz-stress life exponents were higher for the same maximum Hertz stress and assumed fatigue limits with the FEA analysis. What is important to note is that in all cases the values predicted with and without the assumption of a fatigue limit exceeds those predicted using the ANSI/ABMA/ISO standards.

We have concluded that Ioannides and Harris (9) have confused the existence of compressive residual stresses for that of a fatigue limit. In 1965 Zaretsky, et al. (23) published the following relation

$$\left(\tau_{\max}\right)_r = -\tau_{\max} - \frac{1}{2}\left(\pm S_r\right) \tag{38}$$

where τ_{max} is the maximum shear stress, $(\tau_{max})_r$ is the maximum shear stress modified by the residual stress, and S_r is the residual stress, the positive or negative sign indicating a tensile or compressive residual stress, respectively. Accordingly, a

compressive stress would reduce the maximum shear stress and increase the fatigue life according to the inverse relation of life and stress to the ninth power. The modified or adjusted life L_A would be

$$L_A = L\left[\tau_{\max} \Big/ \left(\tau_{\max} - \frac{1}{2} S_r\right)\right]^9 \tag{39}$$

If in Eq. (37) we let τ_u equal 1/2 S_r and c/e equal 9, the two equations become identical. The resultant maximum Hertz stress-life exponents n for a τ_u of 138×10^{-6} GPa (20 ksi) in Table 4 are certainly consistent with a residual stress of 276×10^{-6} GPa (40 ksi).

Roller Profile Comparison

Roller Profile (Tables).—Four roller profiles previously described were analyzed using both a closed form solution and finite element analysis (FEA) for stress and life. The Ioannides-Harris analysis without a fatigue limit is identical to Lundberg-Palmgren analysis and the Weibull analysis is similar to that of Zaretsky if the exponents are chosen to be identical. Because of this, only the Lundberg-Palmgren and the Zaretsky equations were used for this comparison. The closed form solution considers only the maximum Hertz stress and the stressed volume as defined by Lundberg and Palmgren where

$$V = \frac{1}{2}\left(l_r \cdot l_L \cdot Z\right) \tag{40}$$

It does not consider the effects of stress concentrations and the entire subsurface stressed volume.

The theoretical lives for each roller geometry were calculated and normalized to a maximum Hertz stress of 4.14 GPa (600 ksi). The relative life results were subsequently normalized to the flat roller geometry based upon the ANSI/ABMA/ISO standard and a maximum Hertz stress of 2.4 GPa (350 ksi).

The results for the closed form solution without edge loading are summarized in Table 5(a). The Hertz stress-life exponents n of 8.1 and 9.9 were from those summarized in Table 2 and calculated for line contact and a Weibull slope of 1.11 from Lundberg and Palmgren and Zaretsky. The values of life calculated by Zaretsky's method exceed those for Lundberg and Palmgren. Both methods predict lives exceeding those of the standard.

With the closed form solution and not considering edge or stress concentrations, the flat roller profile has the longest predicted life followed by the end-tapered profile, the aerospace profile and the crowned profile, respectively. The full crowned profile produces the lowest lives. While there are life differences between the end tapered profile and the aerospace profile, these differences may not be significant.

The FEA results consider the entire volume stressed under the Hertzian contact and the stress distribution including stress concentrations and edge loading. These results are summarized in Table 5(b). This analysis would strongly suggest that the flat roller geometry is least effective of the four profiles analyzed. Except for the flat roller profile, the lives predicted with the FEA method exceed those with the closed form solution. As with the closed form solution, the end tapered profile produced the highest lives but not significantly different from that of the aerospace profile. Certainly, for critical applications where life and reliability are factors, these two profiles should be those of preference.

Effect of Edge Loading.—The use of blended or profiled rollers is dictated by the fact that the ends or edges of a flat roller will have edge stresses as illustrated in Fig. 2 that can reduce roller bearing life. In order to evaluate the effect of edge loading on the flat roller contact a finite element analysis (FEA) of stress and life was conducted considering a smooth stress distribution with no end loading for a flat roller profile and one with end loading as summarized in Table 5(b). The results were normalized to the ANSI/ABMA/ISO standards at a nominal maximum Hertz stress of 2.4 GPa (350 ksi) and are summarized in Table 6. The relative lives from the standard are presented for comparison purposes. As previously discussed the method of Zaretsky results in a higher life prediction.

The effect of edge loading on the flat roller profile, as expected, is to reduce life by as much as 98 and 82 percent at the higher and lower load, respectively. The actual percentage calculated depends on the analysis used. However, except for the values at the higher stresses of 2.4 and 1.9 GPa (350 and 275 ksi), the predicted life even with edge loading, will exceed that predicted with the ANSI/ABMA/ISO standard. As with the previous analysis for roller profile the FEA analysis appears to reflect a higher maximum Hertz stress-life exponent n then normally accepted. There is lacking in the open literature and, perhaps in the files of the bearing companies, a definitive database at lower Hertzian stress (less than GPa (300 ksi)) for which any of these analyses can be benchmarked.

GENERAL COMMENTS

The basis for the ANSI/ABMA and ISO life prediction for cylindrical roller bearings is the life theory of G. Lundberg and A. Palmgren published in 1947 and 1952 (4,5). Based upon an unpublished database, Palmgren in 1924 (14) assumed roller bearing life based on a modified line contact is inversely proportional to radial load to the 10/3 power. In their 1952 publication Lundberg and Palmgren calculate a 10/3 exponent for roller bearings where one raceway has point contact and the other raceway has line contact. Palmgren, in the third edition of his book, published in 1959 (21) states,

> "Pure line contact occurs only in certain exceptional cases. In many types of roller bearings, at least one track is slightly crowned, so that in the case of zero load there is point contact, which, as the load increases, becomes line contact. The exponent values $p = 3$ and $p = 4$ are therefore the limit values for roller bearings. As it is desirable to have a uniform method of calculation for all designs of roller bearings under all conditions, it is of advantage to introduce a mean value of the exponent for all types, namely $p = 10/3$. The basic dynamic load rating (capacity) of the roller bearings must then be adapted so that the error is small in the most common range, L = 100 millions to L = 10,000 millions of (race) revolutions."

The 10/3 exponent has been incorporated into the ANSI/ABMA/ISO standards first published in 1953. While Palmgren's assumption of point and line contact may have been correct for many types of roller bearings then in use by the bearing company employing him, it is no longer the case for most roller bearings manufactured today and most certainly for cylindrical roller bearings. Experience and the analysis presented herein suggests that the 10/3-power exponent is incorrect and under predicts roller bearing life. Accordingly, it is our recommendation that the ANSI/ ABMA/ISO standards for roller bearings be revised to reflect for cylindrical roller bearings a load-life exponent $p = 4$ with consideration be given to increasing this value to $p = 5$.

In 1985 S. Ioannides and T.A. Harris (9) published what they claimed was a "new life" theory incorporating a fatigue limit. The concept of a fatigue limit for rolling-element bearings was first introduced by Palmgren (14) in 1924 and then abandoned by him by the time he wrote the first edition of his book (21). Lundberg and Palmgren do not consider the concept of a fatigue limit in their 1947 life theory (4). What Ioannides and Harris (9) do is to tack onto the 1947 life theory of Lundberg and Palmgren (4) a relationship incorporating a fatigue limit as discussed in our paper herein above. However, this relationship is the same as the 1965 relation of Zaretsky et al. (23) to account for the effect of compressive residual stress on rolling-element fatigue life. Hence, the fatigue limit of Ioannides and Harris is nothing more than one-half the value of a compressive residual stress, if any, that exists in the steel. To assume anything else will result in an over prediction of rolling-element fatigue life.

The first suggestion and methodology to use finite element analysis for rolling-element bearing life prediction comes from Ioannides and Harris (9) in the application of their "new life" theory. The FEA analysis was applied by us both in this paper and in our previous paper (13) for each of the life equations discussed above. Qualitatively, the FEA analysis provides the same ordering of life prediction as does the closed form solution. The closed form solution first used by Lundberg and Palmgren by implication assumes that the defined stress volume incorporates the maximum value of the critical shearing stress. Whereas, using FEA, the distribution of shearing stresses throughout the entire subsurface Hertzian contact is considered resulting for the most part in a higher life prediction. Because the FEA analysis is sensitive to edge loading and stress concentrations, it is our opinion that it may provide a more accurate quantitative life prediction than the closed form solution regardless of the life theory used. However, in some cases the resultant maximum Hertz stress-life exponent n ranged from ~14 to 18 and in a single case, $n = 29$. These values were higher than we anticipated. Unfortunately, a valid database does not exist to either validate or invalidate the analysis. It is our recommendation that until the various FEA analysis are verified with either experimental or field data, the more conservative life values be relied upon.

SUMMARY OF RESULTS

Four roller profiles used in cylindrical roller bearing design and manufacture were analyzed using both a closed form solution and finite element analysis (FEA) for stress and life. The roller profiles analyzed were flat, tapered end, aerospace and fully crowned. The roller profiles normally used vary with manufacturer. Four rolling-element bearing life models were chosen for this analysis and compared. These were those of Weibull, Lundberg and Palmgren, Ioannides and Harris, and Zaretsky. The effect of a fatigue limit on roller bearing life was evaluated. The Ioannides-Harris analysis without a fatigue limit is identical to the Lundberg and Palmgren analysis and the Weibull analysis is similar to that of Zaretsky if the exponents are chosen to be identical. The roller geometries were evaluated at the normal loads that produced nominal maximum Hertz stresses on a flat raceway of 1.4, 1.9, and 2.4GPa (200, 275, and 350 ksi). The theoretical relative lives were compared to the ANSI/ABMA/ISO life prediction standards for cylindrical roller bearings at 2.4 GPa (350 ksi). The

maximum Hertz stress-life exponents were determined for the individual roller profiles and the resultant individual lives were compared. The following results were obtained:

1. With the closed form solution and not considering edge or stress concentrations, the flat roller profile has the longest predicted life followed by the end-tapered profile, the aerospace profile and the crowned profile, respectively. The full crowned profile produces the lowest lives. While there are life differences between the end tapered profile and the aerospace profile, these differences may not be significant. For the FEA solution which considered stress concentrations the end tapered profile produced the highest lives but not significantly different from that of the aerospace profile followed by the crowned profile and the flat roller profile, respectively.
2. The effect of edge loading on the flat roller profile is to reduce life at the higher load by as much as 98 and 82 percent at the lower load. The actual percentage calculated depends on the analysis used.
3. The resultant predicted life at each stress condition not only depends on the life equation used but also on the Weibull slope assumed. The least variation in predicted life with Weibull slope comes with the Zaretsky equation. At all conditions calculated for a Weibull slope of 1.11, the ANSI/ABMA/ISO standard result in the lowest lives. Except for the Weibull slope of 1.11 at which the Weibull equation predicts the highest lives, the highest lives are predicted by the Zaretsky equation. For Weibull slopes of 1.5 and 2, both the Lundberg-Palmgren and Ioannides-Harris (where τ_u equal 0) equations predict lower lives than the ANSI/ ABMA/ISO standard.
4. Based upon the Hertz stresses for line contact, the load-life exponent p of 10/3, results in a maximum Hertz stress-life exponent n equal to 6.6. This value is inconsistent that experienced in the field. Lundberg and Palmgren's justification for a p of 10/3 was that a roller bearing can experience "mixed contact," that is, one raceway can experience "line contact" and the other raceway "point contact." This is certainly not consistent with the vast majority of cylindrical roller and tapered roller bearings designed and used today.

Appendix A—Derivation of Weibull Distribution Function

As presented in Melis et al. (24) and according to Weibull (6) any distribution function can be written as

$$F(X) = 1 - \exp - \left[f(X) \right] \tag{A1}$$

where $F(X)$ is the probability of an event (failure) occurring. Conversely, from the above the probability of an event not occurring (survival) can be written as

$$1 - F(X) = \exp - \left[f(X) \right] \tag{A2a}$$

or

$$1 - F = \exp - \left[f(X) \right] \tag{A2b}$$

where $F = F(X)$ and $(1 - F) = S$, the probability of survival.

If we have n independent components, each with a probability of the event (failure) not occurring being $(1 - F)$, the probability of the event not occurring in the combined total of all components can be expressed from Eq. (A2b) as

$$\left(1 - F^n\right) = \exp - \left[nf(X) \right] \tag{A3}$$

Equation (A3) gives the appropriate mathematical expression for the principle of the weakest link in a chain or, more generally, for the size effect on failures in solids. As an example of the application of Eq. (A3), we assume a chain consisting of several links. Also, we assume that by testing we find the probability of failure F at any load X applied to a "single" link. If we want to find the probability of failure F_n of a chain consisting of n links, we must assume that if one link has failed the whole chain fails. In other words, if any single part of a component fails, the whole component has failed. Accordingly, the probability of nonfailure of the chain $(1 - F_n)$, is equal to the probability of the simultaneous nonfailure of all the links. Thus,

$$1 - F_n = (1 - F)^n \tag{A4a}$$

or

$$S_n = S^n \tag{A4b}$$

Or, where the probabilities of failure (or survival) of each link are not necessarily equal (i.e., $S_1 \neq S_2 \neq S_3 \neq \ldots$), Eq. (A4b) can be expressed as

$$S_n = S_1 \cdot S_2 \cdot S_3 \cdot \ldots \tag{A4c}$$

This is the same as Eq. (2) of the main text.

From Eq. (A3) for a uniform distribution of stresses throughout a volume V

$$F_v = 1 - \exp - \left[Vf(\sigma) \right] \tag{A5a}$$

or

$$S = 1 - F_v = \exp - \left[Vf(\sigma) \right] \tag{A5b}$$

Equation (A5b) can be expressed as follows:

$$\ln \ln\left[\frac{1}{S}\right] = \ln f(\sigma) + \ln V \tag{A6}$$

It follows that if ln ln(1/S) is plotted as an ordinate and ln$f$(σ) as an abscissa in a system of rectangular coordinates, a variation of volume V of the test specimen will imply only a parallel displacement but no deformation of the distribution function. Weibull (6) assumed the form

$$f(\sigma) = \left[\frac{\sigma - \sigma_u}{\sigma_\beta}\right]^e \tag{A7}$$

and Eq. (A6) becomes

$$\ln \ln\left[\frac{1}{S}\right] = e \ln\left(\sigma - \sigma_u\right) - e \ln \sigma_\beta + \ln V \tag{A8}$$

If σ_u, which is the location parameter, is assumed to be zero and V is normalized whereby ln$V$ is zero, Eq. (A8) can be written as

$$\ln \ln\left[\frac{1}{S}\right] = e \ln\left[\frac{\sigma}{\sigma_\beta}\right] \tag{A9}$$

Equation (A9) is identical to Eq. (2) of the main text.

The form of Eq. (A9) where σ_u is assumed to be zero is referred to as "two-parameter Weibull." Where σ_u is not assumed to be zero, the form of the equation is referred to as "three-parameter Weibull."

Appendix B—Derivation of System Life Equation

As discussed and presented in (24), G. Lundberg and A. Palmgren (4) in 1947, using the Weibull equation for rolling-element bearing life analysis, first derived the relationship between individual component lives and system life. The following derivation is based on but is not identical to the Lundberg-Palmgren (4) analysis.

From Appendix A, Eq. (A9), the Weibull equation can be written as

$$\ln \ln\left[\frac{1}{S_{sys}}\right] = e \ln\left[\frac{N}{N_\beta}\right] \tag{B1}$$

where N is the number of cycles to failure.

Referring to the sketch of a Weibull plot in Fig. 7, the slope e can be defined as follows:

$$e = \frac{\ln \ln\left[\frac{1}{S_{sys}}\right] - \ln \ln\left[\frac{1}{S_{ref}}\right]}{\ln N - \ln N_{ref}} \tag{B2a}$$

or

$$\frac{\ln\left[\frac{1}{S_{sys}}\right]}{\ln\left[\frac{1}{S_{ref}}\right]} = \left[\frac{N}{N_{ref}}\right]^e \tag{B2b}$$

From Eqs. (B1) and (B2b)

$$\ln\left[\frac{1}{S_{sys}}\right] = \left[\ln \frac{1}{S_{ref}}\right]\left[\frac{N}{N_{ref}}\right]^e = \left[\frac{N}{N_\beta}\right]^e \tag{B3}$$

and

$$S_{sys} = \exp - \left[\frac{N}{N_\beta}\right]^e \tag{B4}$$

Referring to Fig. 8, for a given time or life N, each component or stressed volume in a system will have a different reliability S. From Eq. (A4c) for a series reliability system

$$S_{sys} = S_1 \cdot S_2 \cdot S_3 \cdot \ldots \tag{B5}$$

Combining Eqs. (B4) and (B5) gives

$$\exp - \left[\frac{N}{N_\beta}\right]^e = \exp - \left[\frac{N}{N_{\beta 1}}\right]^e \times \exp - \left[\frac{N}{N_{\beta 2}}\right]^e \times \exp - \left[\frac{N}{N_{\beta 3}}\right]^e \times \ldots \tag{B6a}$$

or

$$\exp -\left[\frac{N}{N_\beta}\right]^e = \exp -\left\{\left[\frac{N}{N_{\beta 1}}\right]^e + \left[\frac{N}{N_{\beta 2}}\right]^e + \left[\frac{N}{N_{\beta 3}}\right]^e + \ldots\right\} \tag{B6b}$$

It is assumed that the Weibull slope e is the same for all components. From Eq. (B6b)

$$-\left[\frac{N}{N_\beta}\right]^e = -\left\{\left[\frac{N}{N_{\beta 1}}\right]^e + \left[\frac{N}{N_{\beta 2}}\right]^e + \left[\frac{N}{N_{\beta 3}}\right]^e + \ldots\right\} \tag{B7a}$$

Factoring out N from Eq. (B7a) gives

$$\left[\frac{1}{N_\beta}\right]^e = \left[\frac{1}{N_{\beta 1}}\right]^e + \left[\frac{1}{N_{\beta 2}}\right]^e + \left[\frac{1}{N_{\beta 3}}\right]^e + \ldots \tag{B7b}$$

From Eq. (B3) the characteristic lives $N_{\beta 1}$, $N_{\beta 2}$, $N_{\beta 3}$, etc., can be replaced with the respective lives N_1, N_2, N_3, etc., at S_{ref} (or the lives of each component that have the same probability of survival S_{ref}) as follows:

$$\left[\ln\frac{1}{S_{\text{ref}}}\right]\left[\frac{1}{N_{\text{ref}}}\right]^e = \left[\ln\frac{1}{S_{\text{ref}}}\right]\left[\frac{1}{N_1}\right]^e + \left[\ln\frac{1}{S_{\text{ref}}}\right]\left[\frac{1}{N_2}\right]^e + \left[\ln\frac{1}{S_{\text{ref}}}\right]\left[\frac{1}{N_3}\right]^e + \ldots \tag{B8}$$

where, in general, from Eq. (B3)

$$\left[\frac{1}{N_\beta}\right]^e = \left[\ln\frac{1}{S_{\text{ref}}}\right]\left[\frac{1}{N_{\text{ref}}}\right]^e \tag{B9a}$$

and

$$\left[\frac{1}{N_{\beta 1}}\right]^e = \left[\ln\frac{1}{S_{\text{ref}}}\right]\left[\frac{1}{N_1}\right]^e, \text{ etc.} \tag{B9b}$$

Factoring out ln $(1/S_{\text{ref}})$ from Eq. (B8) gives

$$\frac{1}{N_{\text{ref}}} = \left\{\left[\frac{1}{N_1}\right]^e + \left[\frac{1}{N_2}\right]^e + \left[\frac{1}{N_3}\right]^e + \ldots\right\}^{1/e} \tag{B10}$$

or rewriting Eq. (B10) results in

$$\left[\frac{1}{N}\right]^e = \sum_{i=1}^{n}\left[\frac{1}{N_i}\right]^e \tag{B11}$$

Equation (B11) is identical to Eq. (21) of the text.

REFERENCES

1. Anon., "Load Rating and Fatigue Life for Ball Bearings," ANSI/ABMA 9-1990, The American Bearing Manufacturers Association, Washington, DC, 1990.
2. Anon., "Load Ratings and Fatigue Life for Roller Bearings," ANSI/ABMA 11-1990, The American Bearing Manufacturers Association, Washington, DC, 1990.
3. Anon., "Rolling Bearings – Dynamic Load Ratings and Rating Life," ISO 281:1990(E), International Organization for Standardization, 1990.
4. Lundberg, G. and Palmgren, A. "Dynamic Capacity of Rolling Bearings," Acta Polytechnica Mechanical Engineering Series, 1, 3, Stockholm, 1947.
5. Lundberg, G. and Palmgren, A., "Dynamic Capacity of Roller Bearings," Handingar Proceedings, No. 210, The Royal Swedish Academy of Engineering Sciences, Stockholm, 1952.
6. Weibull, W., "The Phenomenon of Rupture in Solids," Ingeniors Vetenskaps Akademien, No. 153, 1939.
7. Weibull, W., "A Statistical Distribution of Wide Applicability," Journal of Applied Mechanics, 18, 3, 1951, pp. 292–297.
8. Weibull, W., "Efficient Methods for Estimating Fatigue Life Distribution of Rolling Bearings," Rolling Contact Phenomenon, edited by J.B. Bidwell, Elsevier, New York, 1962, pp. 252–265.
9. Ioannides, E. and Harris, T.A., "A New Fatigue Life Model for Rolling Bearings," Journal of Tribology, 107, 3, July 1985, pp. 367–378.
10. Zaretsky, E.V., "Fatigue Criterion to System Design, Life and Reliability," Journal of Propulsion and Power, 3, 1, Jan.-Feb. 1987, pp. 76–83.
11. August, R., and Zaretsky, E.V., "Incorporating Finite Element Analysis into Component Life and Reliability," Journal of Mechanical Design, 115, 4, Oct. 1993, pp. 706–710.
12. Zaretsky, E.V., "Design for Life, Plan for Death," Machine Design, 66, 15, Aug. 1994, pp. 55–59.
13. Zaretsky, E.V., Poplawski, J.V., and Peters, S.M., "Comparison of Life Theories for Rolling-Element Bearings," STLE Trans., 39, 2, April 1996, pp. 237–248, 501–503, 1996.
14. Palmgren, A., "The Service Life of Ball Bearings," *Zectsckrift des Vereines Deutscher Ingenieure*, 68, 14, 1924, pp. 339–341.
15. Zaretsky, E.V., "A. Palmgren Revisited-A Basis for Bearing Life Prediction," *Lubrication Engineering*, J. STLE, 54, 2, Feb. 1998, pp. 18–24.
16. Jones, A.B., Analysis of Stresses and Deflections, Vols. 1 and 2, New Departure, 1946.
17. Rumbarger, J.H., and Jones, A.B., "Dynamic Capacity of Oscillating Rolling Bearings," Journal of Lubrication Technology, 90, 1, Jan. 1998, pp. 130–138, 1968.
18. Parker, R.J., and Zaretsky, E.V., "Reevaluation of the Stress Life Relation in Rolling-Element Bearings," NASA TN D–6745, 1972.
19. Jones, A.B., "A General Theory for Elastically Constrained Ball and Radial Roller Bearings Under Arbitrary Load and Speed Conditions," Journal of Basic Engineering, 82, 2, April 1960, pp. 695–703.
20. Johnson, L.G., *The Statistical Treatment of Fatigue Experiments*, Elsevier, New York, 1964.
24. Palmgren, A., *Ball and Roller Bearing Engineering*, First Ed., SKF Industries, Philadelphia, 1945. Third Ed., SKF Industries, Philadelphia, 1959.
22. Zaretsky, E.V., "Fatigue Criterion to System Design, Life and Reliability-A Primer, NASA TM–106022, 1992.
23. Zaretsky, E.V., Parker, R.J., Anderson, W.J., and Miller, S.T., "Effect of Component Differential Hardness on Residual Stress and Rolling-Contact Fatigue," NASA TN D–2664, 1965.
25. Melis, M.E., Zaretsky, E.V., and August, R., "Probabilistic Analysis of Aircraft Gas Turbine Disk Life and Reliability," J. Propulsion and Power, Trans. AIAA, 15, 5, Sept.-Oct. 1999, pp. 658–666.

TABLE 1.—MAXIMUM HERTZ STRESS AS FUNCTION OF NORMAL LOAD AND ROLLER PROFILE
[Roller Dia., 12.7 mm (0.5 in.); roller length, 12.7 mm (0.5 in.).]

(a) Constant normal load

Normal load, P, N, (lbs)	Flat[1]	End tapered[2]	Aerospace[2]	Crowned[1]
	Maximum Hertz stress, GPa, (ksi)			
4239 (953)	1.38 (200)	1.53 (222)	1.57 (227)	1.84 (267)
8016 (1802)	1.90 (275)	2.02 (293)	2.05 (298)	2.29 (333)
12980 (2918)	2.41 (350)	2.52 (365)	2.54 (369)	2.76 (400)

(b) Constant Hertz stress

Maximum Hertz stress, GPa, (ksi)	Normal load, P, N, (lbs)			
1.38 (200)	4239 (953)	3327 (748)	3158 (710)	1557 (350)
1.9 (275)	8016 (1802)	6993 (1572)	6699 (1506)	3955 (889)
2.4 (350)	12980 (2918)	11824 (2658)	11521 (2590)	8154 (1833)

[1]Based on closed form solution.
[2]Based on laminated roller analysis.

TABLE 2.—MAXIMUM HERTZ STRESS-LIFE EXPONENT AS FUNCTION OF WEIBULL SLOPE FOR FOUR LIFE EQUATIONS[1]

Equation	Weibull slope	Stress-life exponent, *n*		Load-life exponent, *p*	
		Line contact	Point contact	Line contact	Point contact
ANSI/ ABMA/ISO	1.11	6.6	9	3.33	3
Weibull eq. (10)	1.11	10.2	11.1	5.1	3.7
	1.5	7.5	8.2	3.8	2.7
	2.0	5.7	6.2	2.9	2.1
Lundberg-Palmgren, eq. (19)	1.11	8.1	9	4.1	3
	1.5	6.0	6.7	3	2.2
	2.0	4.5	5.0	2.3	1.7
Ioannides-Harris, eq. (26)	1.11	8.1	9	4.1	3
	1.5	6.0	6.7	3	2.2
	2.0	4.5	5.0	2.3	1.7
Zaretsky, eq. (31)	1.11	9.9	10.8	5	3.6
	1.5	9.7	10.3	4.9	3.4
	2.0	9.5	10.0	4.8	3.3

[1]No fatigue limit assumed, τ_u equal 0.

TABLE 3.—COMPARISON OF RELATIVE LIFE FROM FOUR LIFE EQUATIONS FOR FLAT ROLLER WITH NO EDGE LOADING[1]

Maximum Hertz stress, GPa (ksi)[2]	ANSI/ ABMA/ ISO Standard[3]	Relative theoretical life			
		Weibull eq. (10)	Lundberg-Palmgren eq. (19)	Ioannides-Harris[4] eq. (26)	Zaretsky eq. (31)
Weibull slope, 1.11					
1.4 (200)	40	2096	209	209	1509
1.9 (275)	4.9	79	16	16	65
2.4 (350)	1	6.4	2.2	2.2	5.9
Weibull slope, 1.5					
1.4 (200)	40	108	21	21	1210
1.9 (275)	4.9	9.9	3.1	3.1	551
2.4 (350)	1	1.6	0.7	0.7	5.3
Weibull slope, 2.0					
1.4 (200)	40	15	4	4	971
1.9 (275)	4.9	2.4	2.4	2.4	47
2.4 (350)	1	0.6	0.3	0.3	4.8

[1]Normalized to 4.14 GPa (600 ksi).
[2]Refer to Table 1 for values of load.
[3]Based on Weibull slope equal 1.11.
[4]No fatigue limit assumed, τ_u equal 0.

TABLE 4.—EFFECT OF FATIGUE LIMIT ON RELATIVE LIFE OF FLAT ROLLER WITH NO EDGE LOADING USING IOANNIDES-HARRIS EQUATION[1]
[Weibull Slope, 1.11.]

Maximum Hertz stress, GPa (ksi)[2]	Relative theoretical life, L, and resultant stress-life exponent, n									
	ANSI/ABMA/ISO standard		Closed form solution							
			Fatigue limit, τ_u, GPa (ksi)							
			0		138×10^{-6} (20)		276×10^{-6} (40)		414×10^{-6} (60)	
	L	[3]n	L	[3]n	L	[3]n	L	[3]n	L	[3]n
			(a) Ioannides-Harris, eq. (26)							
1.4 (200)	40	6.6	209	8.1	9074	11.4	5.7×10^{6}	18.4	[4]∞	[4]∞
1.9 (275)	4.9	6.6	16	8.1	209	10.7	7545	15.7	2.8×10^{6}	25.6
2.4 (350)	1	– –	2.2	– –	16	– –	190	– – –	5815	– – –
			(b) Finite element analysis							
1.4 (200)	4.0	6.6	661	12.2	8267	16	1.5×10^{5}	20.5	9.7×10^{6}	27.8
1.9 (275)	49	6.6	37	14.1	215	19.1	2234	27	47165	38.5
2.4 (350)	1	– –	2.2	– –	4.7	– –	10	– –	22	– – –

[1]Normalized to maximum Hertz stress of 4.14 GPa (600 ksi) without a fatigue limit.
[2]Refer to Table 1 for values of load.
[3]Normalized to maximum Hertz stress of 2.4 GPa (350 ksi).
[4]Infinite life.

TABLE 5.—EFFECT OF ROLLER PROFILE ON RELATIVE LIFE[1]
[Weibull slope, 1.11, critical shear stress, τ_{45}.]

Maximum Hertz stress, GPa, (ksi)[2]	ANSI/ ABMA/ISO standard		(a) Closed form solution without edge loading															
			Lundberg-Palmgren (eq. (19))								Zaretsky (eq. (31))							
			Flat		End tapered		Aerospace		Crowned		Flat		End tapered		Aerospace		Crowned	
	Life	[3]n	Life	[3]n	Life	[3]n	Life	[3]n	Life	[3]n	Life	[3]n	Life	[3]n	Life	[3]n	Life	[3]n
1.4 (200)	40	6.6	209	8.1	90	8.1	75	8.1	20	8.1	1509	9.9	537	9.9	431	9.9	86	9.9
1.9 (275)	4.9	6.6	16	8.1	9.5	8.1	8.3	8.1	3.4	8.1	65	9.9	34	9.9	29	9.9	9.7	9.9
2.4 (350)	1	– –	2.2	– –	1.6	– –	1.5	– –	0.8	– –	5.9	– –	3.9	– –	3.5	– –	1.6	– –
(b) Finite Element Analysis (FEA) with edge loading																		
1.4 (200)	40	6.6	71	15.5	630	13.9	528	10.7	96	10.7	296	15.7	824	12.6	756	10.6	120	28.6
1.9 (275)	4.9	6.6	1.2	15.9	33	17.9	33	11.2	13	15.2	4.9	16.3	43	14.9	35	9.3	12	8.7
2.4 (350)	1	– –	0.05	– – –	0.93	– – –	3.5	– – –	0.65	– – –	0.19	– – –	2.2	– – –	5.4	– – –	2.2	– – –

[1]Normalized to maximum Hertz stress of 4.14 GPa (600 ksi).
[2]Table 1 for values of load.
[3]Normalized to maximum Hertz stress of 2.4 GPa (350 ksi).

TABLE 6.—EFFECT OF EDGE STRESSES ON RELATIVE LIFE OF FLAT ROLLER BASED ON FINITE ELEMENT ANALYSIS[1]

[Weibull Slope, 1.11; critical shear stress, τ_{45}.]

Maximum Hertz stress, GPa (ksi)[2]	ANSI/ABMA/ISO standard		Lundberg-Palmgren (eq. (19))		Zaretsky (eq. (31))	
	Relative theoretical life, L, and resultant stress-life exponent, n					
	L	[3]n	L	[3]n	L	[3]n
			No edge stresses			
1.4 (200)	40	6.6	667	12.2	1648	13
1.9 (275)	4.9	6.6	37	14.1	62	14.1
2.4 (350)	1	– –	2.2	– – –	3.7	– – –
			Edge stresses			
1.4 (200)	40	6.6	71	15.5	296	15.7
1.9 (275)	4.9	6.6	1.2	15.9	4.9	16.3
2.4 (350)	1	– –	0.05	– – –	0.19	– – –

[1]Normalized to maximum Hertz stress of 4.14 GPa (600 ksi).
[2]Refer to Table 1 for values of load.
[3]Normalized to maximum Hertz stress of 2.4 GPa (350 ksi).

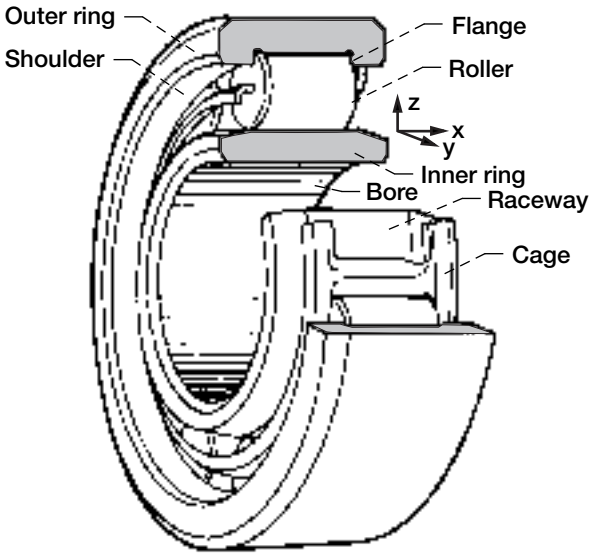

Figure 1.—Cylindrical roller bearing with nonlocating inner raceway. Bearing accommodates axial movement by not restraining rollers axially on inner raceway. Similar bearing with flanged inner ring allows axial roller movement on outer raceway.

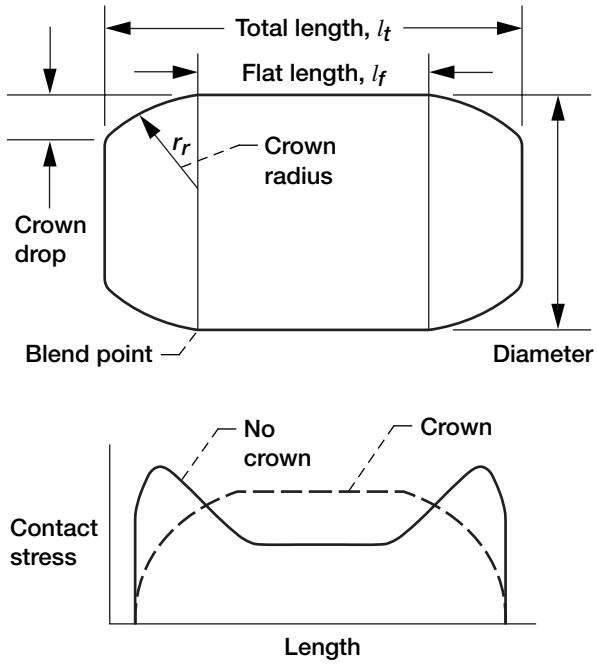

Figure 2.—Roller profile influence on stress pattern.

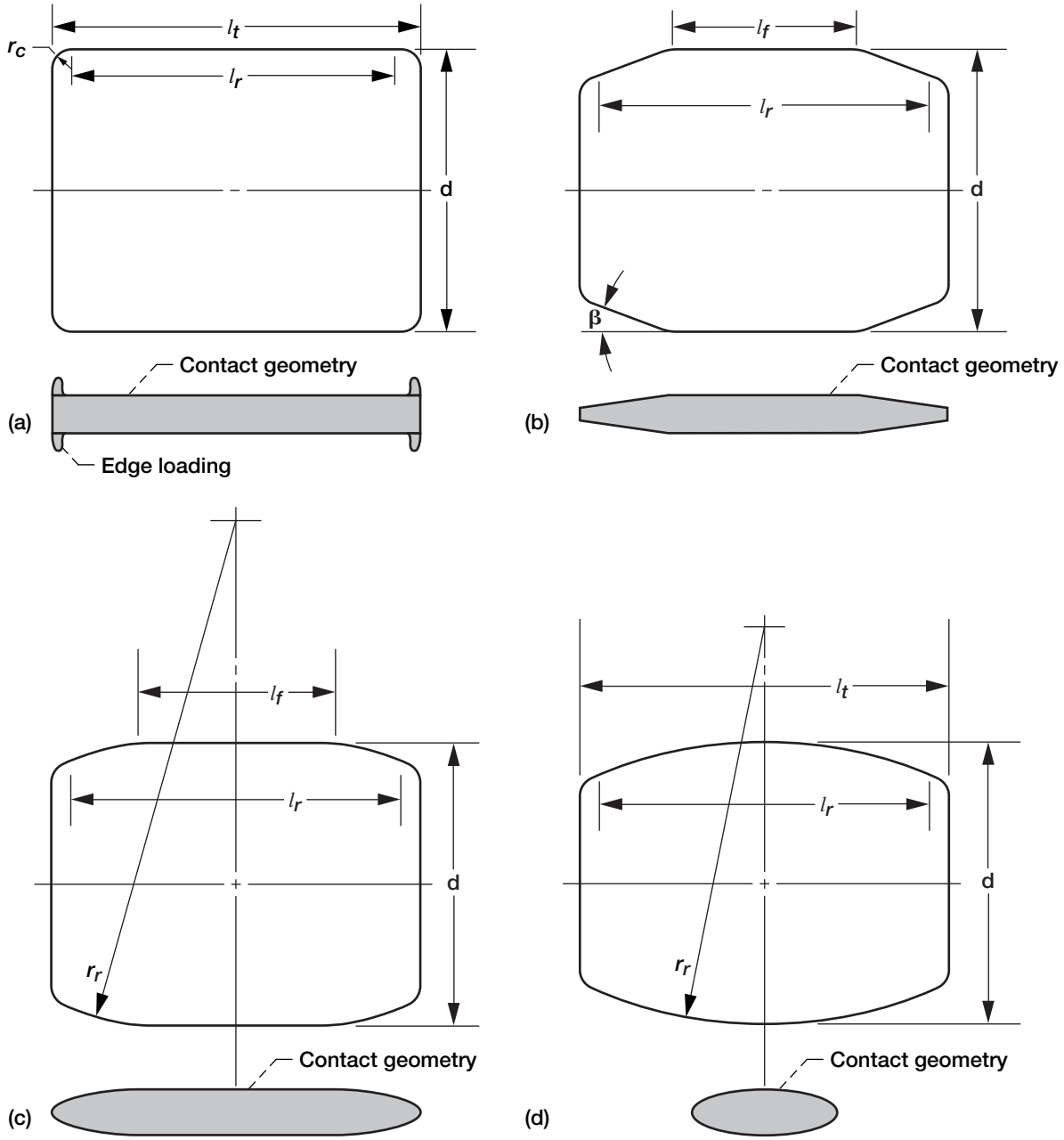

Figure 3.—Roller profile types and Hertzian contact geometry. (a) Flat roller profile. (b) Tapered crown roller profile. (c) Aerospace crown roller profile. (d) Full crown roller profile.

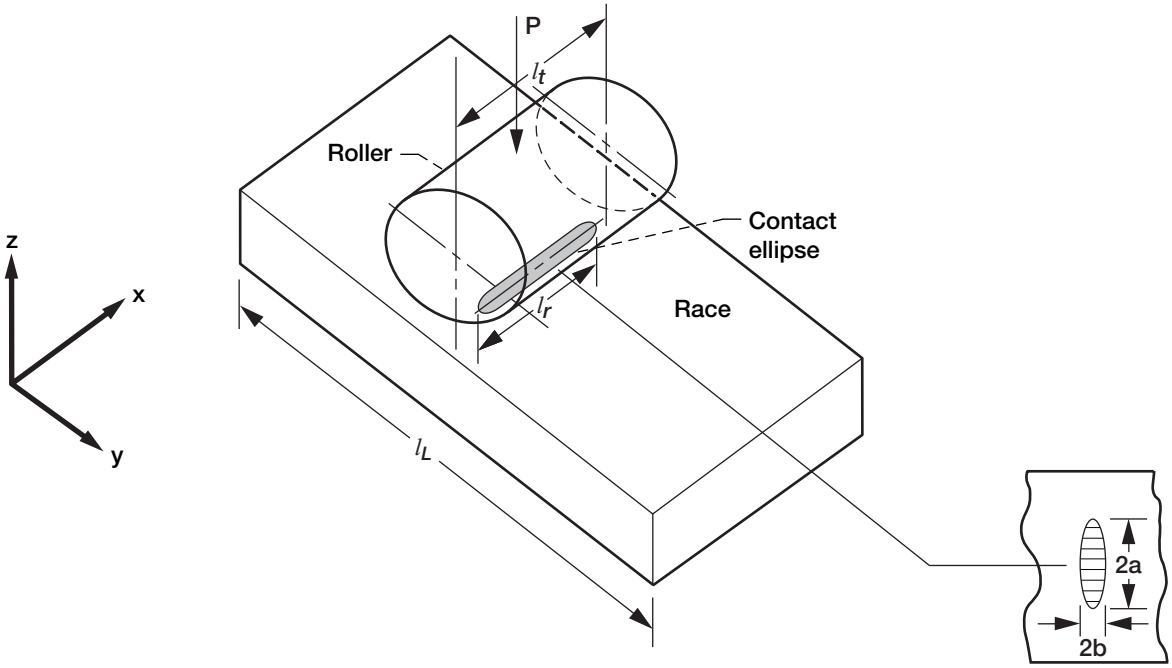

Figure 4.—Schematic of loaded crowned roller on race.

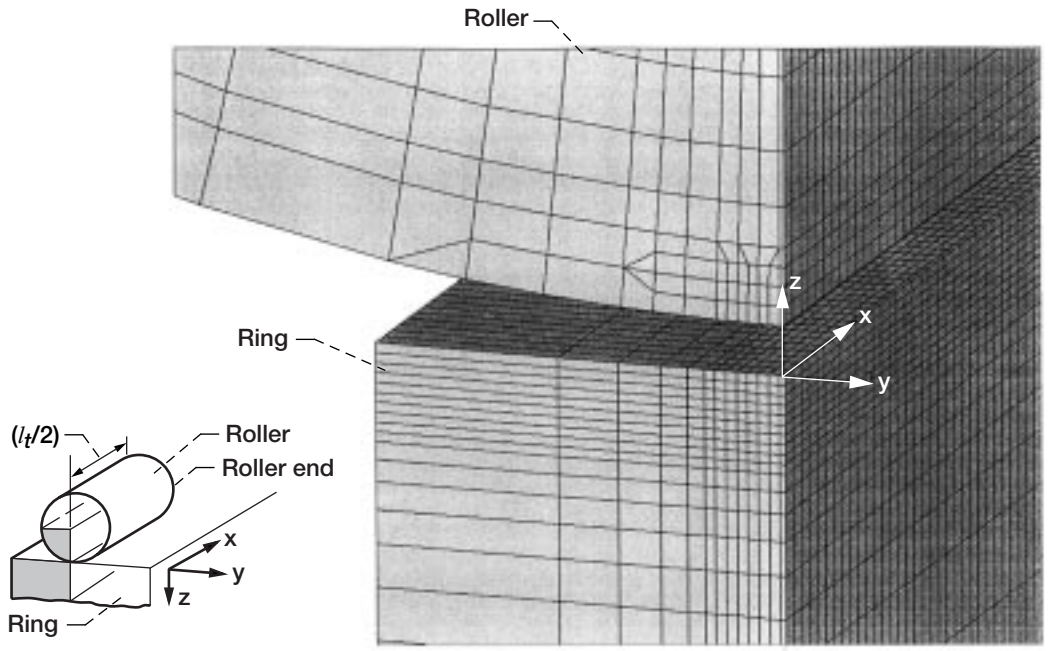

Figure 5.—Quarter section finite-element model of roller-race contact.

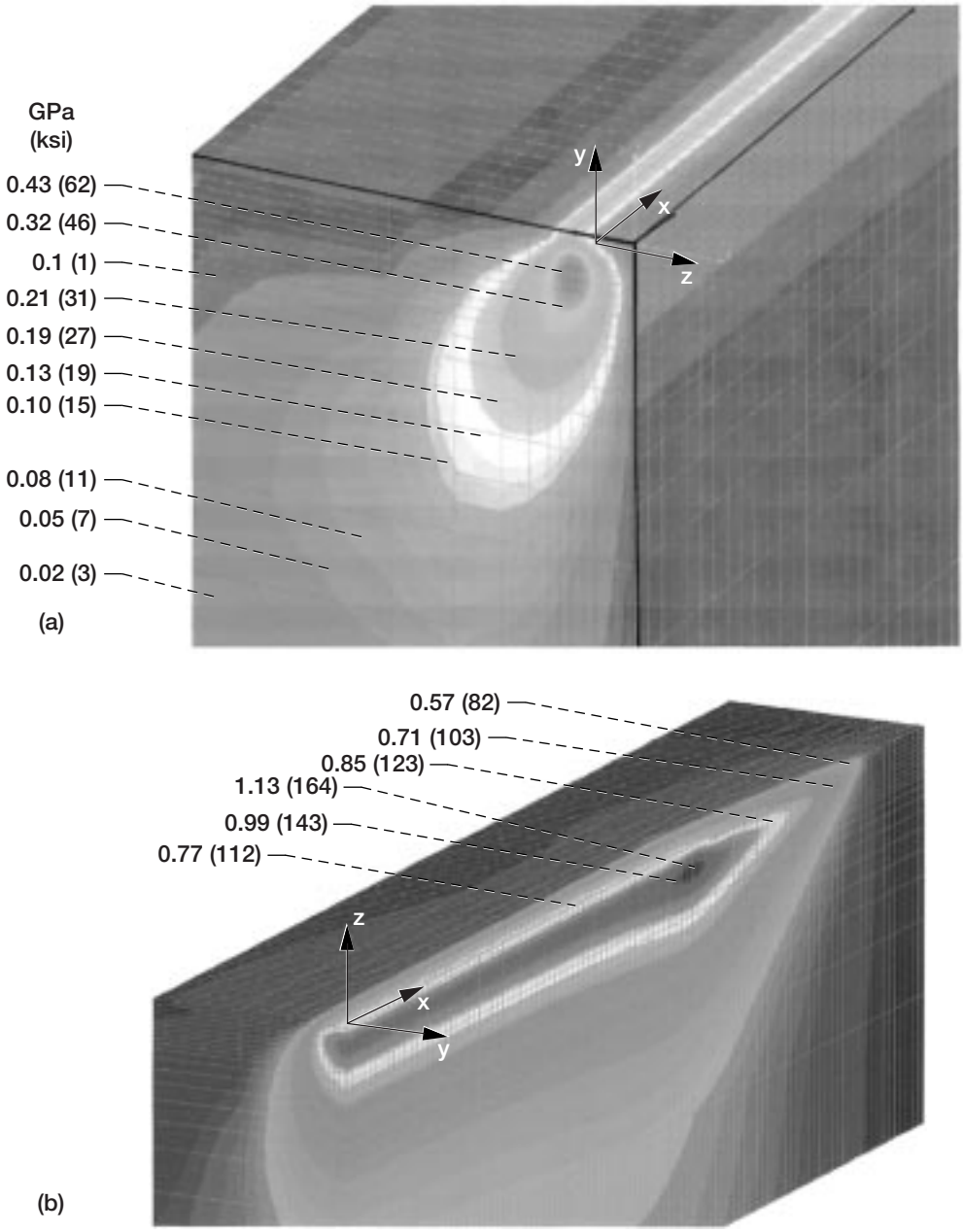

Figure 6.—FEA stress profile of quarter section of raceway for roller with aerospace (partial) crown. Maximum Hertz stress, 1.9 (275) GPa (ksi). (a) Orthogonal shear stress. (b) Von Mises stress.

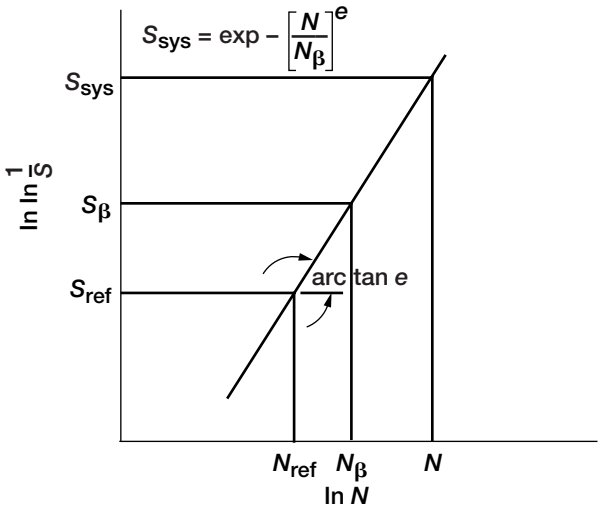

Figure 7.—Sketch of Weibull plot where (Weibull) slope or tangent of line is e. S_β is probability of survival of 36.8 percent at which $N = N_\beta$ or $N/N_\beta = 1$.

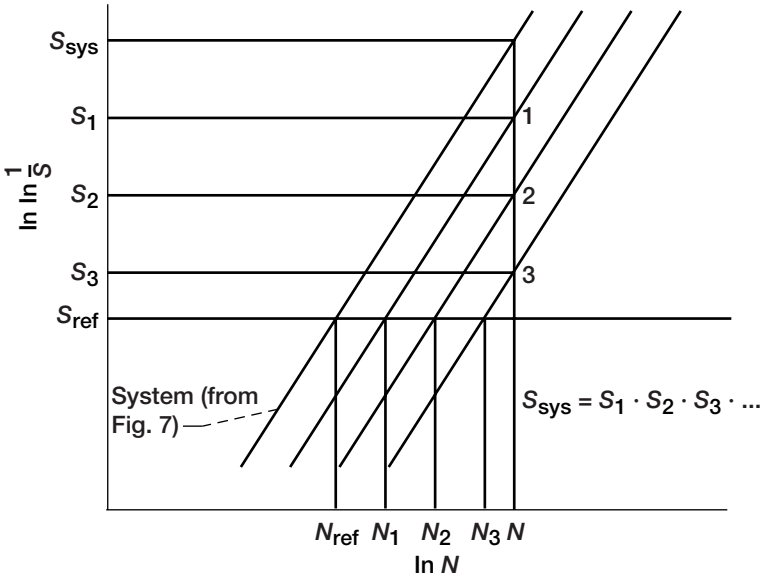

Figure 8.—Sketch of multiple Weibull plots where each numbered plot represents cumulative distribution of each component in system and system Weibull plot represents combined distribution of plots 1, 2, 3, etc. (All plots are assumed to have same Weibull slope e.)

REPORT DOCUMENTATION PAGE

Form Approved
OMB No. 0704-0188

Public reporting burden for this collection of information is estimated to average 1 hour per response, including the time for reviewing instructions, searching existing data sources, gathering and maintaining the data needed, and completing and reviewing the collection of information. Send comments regarding this burden estimate or any other aspect of this collection of information, including suggestions for reducing this burden, to Washington Headquarters Services, Directorate for Information Operations and Reports, 1215 Jefferson Davis Highway, Suite 1204, Arlington, VA 22202-4302, and to the Office of Management and Budget, Paperwork Reduction Project (0704-0188), Washington, DC 20503.

1. AGENCY USE ONLY (*Leave blank*)

2. REPORT DATE
August 2000

3. REPORT TYPE AND DATES COVERED
Technical Memorandum

4. TITLE AND SUBTITLE
Effect of Roller Profile on Cylindrical Roller Bearing Life Prediction

5. FUNDING NUMBERS
WU–253–02–98–00

6. AUTHOR(S)
Joseph V. Poplawski, Erwin V. Zaretsky, and Steven M. Peters

7. PERFORMING ORGANIZATION NAME(S) AND ADDRESS(ES)
National Aeronautics and Space Administration
John H. Glenn Research Center at Lewis Field
Cleveland, Ohio 44135–3191

8. PERFORMING ORGANIZATION REPORT NUMBER
E–12037

9. SPONSORING/MONITORING AGENCY NAME(S) AND ADDRESS(ES)
National Aeronautics and Space Administration
Washington, DC 20546–0001

10. SPONSORING/MONITORING AGENCY REPORT NUMBER
NASA TM—2000-210368

11. SUPPLEMENTARY NOTES
Prepared for the 2000 Annual Meeting sponsored by the Society of Tribologists and Lubrication Engineers, Nashville, Tennessee, May 7–11, 2000. Joseph V. Poplawski and Steven M. Peters, J.V. Poplawski and Associates, 528 N. New Street, Bethlehem, Pennsylvania; Erwin V. Zaretsky, NASA Glenn Research Center. Responsible person, Erwin V. Zaretsky, organization code 5900, (216) 433–3241.

12a. DISTRIBUTION/AVAILABILITY STATEMENT
Unclassified - Unlimited
Subject Categories: 37 and 39 Distribution: Nonstandard

This publication is available from the NASA Center for AeroSpace Information, (301) 621–0390.

12b. DISTRIBUTION CODE

13. ABSTRACT ***(Maximum 200 words)***

Four roller profiles used in cylindrical roller bearing design and manufacture were analyzed using both a closed form solution and finite element analysis (FEA) for stress and life. The roller profiles analyzed were flat, tapered end, aerospace, and fully crowned loaded against a flat raceway. Four rolling-element bearing life models were chosen for this analysis and compared. These were those of Weibull, Lundberg and Palmgren, Ioannides and Harris, and Zaretsky. The flat roller profile without edge loading has the longest predicted life. However, edge loading can reduce life by as much as 98 percent. The end tapered profile produced the highest lives but not significantly different than the aerospace profile. The fully crowned profile produces the lowest lives. The resultant predicted life at each stress condition not only depends on the life equation used but also on the Weibull slope assumed. For Weibull slopes of 1.5 and 2, both Lundberg-Palmgren and Iaonnides-Harris equations predict lower lives than the ANSI/ABMA/ISO standards. Based upon the Hertz stresses for line contact, the accepted load-life exponent of 10/3 results in a maximum Hertz stress-life exponent equal to 6.6. This value is inconsistent with that experienced in the field.

14. SUBJECT TERMS
Rolling-element bearings; Life prediction methods; Rolling-element fatigue; Stress analysis

15. NUMBER OF PAGES
32

16. PRICE CODE
A03

17. SECURITY CLASSIFICATION OF REPORT	18. SECURITY CLASSIFICATION OF THIS PAGE	19. SECURITY CLASSIFICATION OF ABSTRACT	20. LIMITATION OF ABSTRACT
Unclassified	Unclassified	Unclassified	