NASA Technical Memorandum 106153

A Multi-Zone "Muffle" Furnace Design

Neil D. Rowe
Lewis Research Center
Cleveland, Ohio

and

Martin Kisel
Analex Corporation
Brook Park, Ohio

May 1993

NASA

A MULTI - ZONE "MUFFLE" FURNACE DESIGN

Neil D. Rowe
National Aeronautics and Space Administration
Lewis Research Center
Cleveland, Ohio 44135

and

Martin Kisel
Analex Corporation
3001 Aerospace Parkway
Brook Park, Ohio 44142

SUMMARY

A Multi-Zone Muffle-Tube Furnace was designed, built, and tested for the purpose of providing an in-house experience base with tubular furnaces for materials processing in microgravity. As such, it must not only provide the desired temperatures and controlled thermal gradients at several discrete zones along its length but must also be capable of sustaining the rigors of a Space Shuttle launch. The furnace is insulated to minimize radial and axial heat losses. It is contained in a water-cooled enclosure for purposes of dissipating un-wanted residual heat, keeping the outer surfaces of the furnace at a "touch-safe" temperature, and providing a rugged housing. This report describes the salient features of the furnace, testing procedures and results, and concluding remarks evaluating the overall design.

INTRODUCTION

With the advent of material processing programs in a space microgravity environment such as Crystal Growth, Diffusion Studies, Directional Solidification of Materials such as GaAs, Float Zone Studies, etc., the need arose to develop a furnace composed of a large number of heater coils (probably up to thirty) arranged in series on a muffle or core tube, and independently controlled by a digital computer. The coils provide a constant thermal profile with respect to the furnace core. They must also provide a means for obtaining desired thermal gradients within coil zones during processing. This is accomplished by controlling individual heater elements electronically. The furnace would operate in a microgravity environment aboard vehicles such as Shuttle Orbiter (Mid-Deck), Spacelab, and eventually Space Station Freedom. It should have multi-user capability incorporating a means of conveniently adjusting the furnace's thermal profile, thereby accommodating several Principal Investigators flying on a single mission. Space flight constraints dictate that the furnace should have minimum weight and volume and should operate within allocated power and cooling requirements. Simplicity, with due regard for serviceability, assembly and dis-assembly, component replacement, and safety are important considerations of the design.

HARDWARE DESCRIPTION

An inherent feature of a muffle type furnace is the continuous, un-interrupted length of the tube which forms its core. This provides a uniform heating configuration without steps or differences in contour, material composition, tube wall thickness, and surface finish. The core requires support along its entire length and on the ends due to mechanical and thermal loads imposed on it during vehicle launch and furnace operation. The sketch in figure 1 is a cross section of the furnace showing the internal construction. The end components are solid circular pieces of insulating material and aluminum. They provide the end closures which reduces the axial heat loss and serves to support and connect to the outer cylindrical water-cooled shell to form a rugged encapsulated structure. The pieces immediately surrounding the core are of a "split-ring" design to facilitate furnace assembly and dis-assembly and to provide a means for installing heater and thermocouple wires. The sketch in figure 2 shows the heater wire coils and thermocouples and how they are attached to the muffle tube core.

An important design consideration that was adhered to as the design progressed was accessibility and replaceability of internal components, especially the heater wire sub-assemblies and the thermocouples, which tend to degrade or burn out after a period of use. In previous muffle-tube designs the core tube was wrapped with the heater wires and then those wires were permanently embedded in a ceramic paste. This formed a potted muffle-tube assembly and the entire unit had to be discarded and replaced if a heater wire broke or burned out. With this design the heater wires (Kanthal-A1) are not permanently potted in place but are merely wrapped around the core tube into spiral grooves machined into the outer surface of the tube. Each zone is wrapped separately and has its own "in" and "out" leads. In this way, power to each individual zone can be regulated up or down as desired. Also, the heater wires for each zone can be replaced without disturbing the heater wires from the other zones. The thermocouples (Inconel sheathed Type "K", closed ball, grounded) can also be easily replaced since they are only held in place by thin inconel wire bands and sheet metal tabs. The leads of the heaters and the thermocouples are "Sandwiched" between the insulation components and brought out along the split centerlines to "Micarta" terminal blocks attached to the outer aluminum housing of the furnace.

Other Unique features of this design are:

1.) The outer cylindrical shell consists of two halves split along a horizontal centerline. The "clamshell" construction is formed by casting aluminum in a mold around flattened stainless steel tubes which contain the water coolant flow. Stainless steel is required by the Space Shuttle to prevent contamination of their coolant system. The use of aluminum provides a lighter construction with good heat transfer characteristics.

2.) Coiled compression springs at each end of the muffle-tube to provide enough axial support during launch but still allow for thermal expansion of the tube during furnace operation.

3.) Aluminum radiator "fins" which separate the heated zones and can be reconfigured with different thicknesses and internal diameters to alter the heat rejection characteristics of each of the heated zones of the core.

4.) Light weight rigid insulation in areas that require structural support and will not need to be replaced and more flexible "blanket" type insulation that will more readily conform to cavities and may need more frequent replacement.

5.) A fixture, as shown in figure 3, is very useful when assembling or dis-assembling the unit and for replacing, repairing, or re-configuring the inner components.

Figures 4, 5, 6 and 7 are photographs showing the components of the furnace before assembly. Figures 8 shows the furnace in its assembled configuration ready for operation or testing. The four-zone unit complete with heaters, thermocouples, and a "dummy load" (i.e., a cylindrical piece of Boron Nitride material which represents a test specimen having similar structure and density), weighs twenty nine pounds. Most of this weight is in the outer shell and can be substantially reduced for flight application by judiciously machining away material in thick sections.

THERMAL TESTING

The "Muffle" furnace was tested to determine power consumption as a function of temperature and to accomplish a linear gradient profile. The test scenario was developed to minimize the cycling of the heater wires until all test profiles were complete to avoid damage to the muffle windings. The test sample inside the furnace was a one inch diameter Boron Nitride cylinder. Eight holes were drilled longitudinally to insert thermocouples through the top of the furnace and into the Boron Nitride cylinder to estimate an axial thermal gradient in the sample. The hole size was 0.062" and two 0.040" thermocouples, 180 degrees apart, were located in each zone. A complete description of the computer controlled test facility, including a schematic, is included in the Appendix.

The thermal testing began by slowly (~5°C/hr) ramping the temperature of the heaters up to 500°C. This temperature was held constant for several hours and then ramped down to 100°C before turning power off. An attempt was made to try to control the sample temperature using a simple proportional-integral-derivative (PID) feedback algorithm (Ref. 1) which uses the difference between the desired setpoint and the sample temperature as the error signal. PID settings from similar furnace tests were used as a starting point and then modified to try to improve the control stability. The sample temperature never reached the setpoint after ~ 1 hour. Sixteen test runs were made in an attempt to tune the PID settings to achieve control of the sample temperatures, including adding the derivative term. The oscillations around the setpoint varied but the best results were still ±5°C. Figure 9 shows an example of the heater thermocouples oscillation for a typical test. Figure 10 shows the variation of sample thermocouples which were the control points for these tests. The apparent phase shift noted for the zone one thermocouple does not appear to have any real physical significance. The oscillations in temperature would eventually damp out if the test were run for a longer time.

The procedure for run #17 controlled the heater wall temperature, as was done previously, (control of thermocouples located near the heater windings) in an attempt to reach the sample temperatures desired. Four temperatures were chosen that were used in previous furnace test plans to obtain a plot of temperature vs. power. The first test was to ramp (~10°C/hr) the temperature of the 4 heaters to 500°C, soak for 1 hour, ramp the heaters to 627°C, soak for 1 hour then turn power off and let the furnace cool to room temperature. The next test was to ramp to 755°C, soak 1 hour, ramp to 900°C, soak for 1 hour and turn power off. These tests were repeated for verification of data. The results are summarized in a graph of sample temperature vs. power consumption in Figure 11.

The next series of tests was done to try to obtain a gradient in the sample. Again heater wall temperatures were controlled and by trial and error varied in an attempt to achieve the desired sample temperatures. A total of six tests were made in an attempt to obtain a 10°C/cm gradient in the sample. In all tests, the gradient was less then 5°C/cm and the linear slope of the setpoints was not obtained in the sample. See figure 12 for one example of the heater temperature and sample temperatures for an attempted gradient case.

It is suspected that the problem in attaining a linear gradient is that excessive insulating material was used between the muffle tube and the conducting fin. As a result the heat could not be removed in an efficient way and the heater temperature of one zone was coupling with the adjacent zone.

Figures 13 and 14 represent the difference in sample and heater temperatures and the power distribution for some isothermal heater wall temperature cases. It may seem disturbing that the apparent heater wall temperature is lower than the sample temperature. However, this may be due to the fact that the thermocouples that indicate the heater temperature are not physically attached to the wire. It is suspected that this is the reason for the difficulty in reaching a steady state while controlling from the sample. The location of the thermocouple would cause a time delay in the control response which was difficult to compensate for with the PID parameters. It is anticipated that with more tuning test runs, the correct PID settings could be determined.

In reviewing these results, it was concluded that the furnace design should be modified to correct the problems discussed above before further testing. The data obtained indicates no inherent problems with the overall approach but changes are needed to accomplish controllable thermal gradients.

Reference 1: Eckman, D.P., 1958, Automatic Process Control, John Wiley & Sons, Inc., New York, p. 59-77

DYNAMIC (VIBRATION) TESTING

Following the thermal testing the assembled furnace unit, complete with heaters, thermocouple instrumentation, and a "dummy load" was vibration tested in the LeRC Structural Dynamics Lab. The test configuration and control and feed-back instrumentation is shown in figure 15.

The purpose of the tests was to evaluate the ability of the unit, especially the internal components such as the insulation and heater and thermocouple wires, to survive the random vibration environment associated with an STS launch. The 6.5 grms power spectral density curve used as the basis for the tests is an envelope for the random vibration launch environment for the STS middeck, which is the probable location where such a furnace might be installed.

The unit was vibrated in the lateral direction first (hereafter referred to as the "y-axis") and then in the axial direction (hereafter referred to as the "z-axis"). Initially a sine sweep test was run at 9.5 g's and then random vibration tests were run at total acceleration levels of 6.5, 9.2, and 13.0 g's RMS (13.0 g's RMS in the "z-axis" only which is considered worst-case).

During "y-axis" testing of the unit, dust plumes were observed rising from the split line of the outer shell aluminum housing at the point where the heater and thermocouple wire leads protrude and also at the joint between the outer shell and the top end cap of the assembly. These plumes, though barely visible, were observed during both the 6.5 and 9.2 g's RMS vibration runs. Post test inspection revealed only minor damage to the aluminum oxide material. It was concluded that the abrasions, though very slight, could be eliminated or at least minimized by inserting felt material thus eliminating the scraping between metal and ceramic surfaces.

During "z-axis" testing, the only visible plume occurred briefly during the 13.2 g's RMS run. Post test inspection revealed only minor abrasions.

Continuity tests were performed on the heater and thermocouple wires after each run in each axis and all results were positive.

The vibration testing verified that the Muffle-Tube Furnace configuration can successfully operate in the expected and worst-case launch environment.

CONCLUDING REMARKS

It was demonstrated that a Multi-Zone "Muffle" Furnace can be designed and built to satisfy research requirements for materials processing in a microgravity environment. Such a furnace can be made to withstand the vibrations produced during a shuttle launch without significant damage that would affect its operation. The furnace was cycled several times up to 900°C without any apparent detrimental affects on the heater wires, thermocouples, or insulation. The only issue which remains to be verified is the ability of the furnace to produce distinct and controllable thermal gradients in the zones. Indications are that changing the insulating material composition, changing the heater wire wrap geometry (i.e., wrapping the wires closer together in each zone and leaving a larger un-wrapped gap between zones to decrease the amount of heat "coupling" or "over-lap" from one zone to the adjacent zone), and altering the geometry of the aluminum radiation fins would appreciably improve the probability of obtaining the desired temperature profile and thermal gradients.

APPENDIX

Description of the Furnace Test Facility

The schematic contained in Fig. 16 identifies the overall configuration and the individual components making up the computer-controlled test facility used in this development project. Detailed specifications for each major component are available from manufactures listed in Ref. 2.

The process being controlled in the system of Fig. 16 is a four-zone "Muffle" furnace prototype. The electrical power to each heating element comes from an in-house fabricated power control card which mounts a Copley Controls Model 215A servo amplifier. These amplifiers utilize pulse-width modulation (pwm) and are claimed to be 98% efficient. Although these amplifiers are primarily used for dc motor control, they were adapted to use as heating element drivers by connecting a toroidal inductor in series with each heating element. These inductors were supplied by the amplifier manufacturer. It is to be noted that the input to this amplifier is a voltage (0-10 volts, in our case) and the output is a dc-current (0-10 amps) the value of which is regulated against changes in the amplifier's supply voltage (nominally 28 volts). This current regulating capability is only possible because the pwm switching frequency is at a relatively high value of 22 khz. If a low switching frequency is used (e.g., 10 to 30 hz) it is not possible to regulate the current output against supply voltage variations.

The raw power supplied to each amplifier comes from a HP 6269B adjustable regulated dc power supply. The supply's output can be manually varied while the furnace is operational and no apparent temperature changes are detected. This is a result of the current regulating capability of the power amplifiers.

Power amplifier control inputs (0 to 10 volts) come from the outputs of a Metrabyte 6- channel D/A converter card (DDA-06) plugged into the motherboard of the PC-compatible computer used to control the process. Each channel has its own data register which the computer treats like any other memory location in its address space.

For feedback control purposes, a temperature measurement must be made at some point in each active zone of the furnace. These temperature measurements were made using Type K thermocouples located in one of two locations. The first is inside the test sample in the furnace which has holes drilled axially to allow thermocouples to be inserted. The lengths of these holes were such that each active zone had one corresponding temperature in the sample. The other location was a metal tab, strapped to the muffle tube near the heating wire, which had a thermocouple welded to it. This is referred to as a wall temperature measurement.

The thermocouple mv-output signals were cold-junction compensated and multiplexed to a digital voltmeter using a 44422A printed circuit board plugged into the backplane of a HP 3497A data acquisition unit. A similar multiplexer board was used to multiplex the power amplifiers' output voltages to the data acquisition unit. These voltage measurements were used to calculate the

instantaneous power flow into each heating element and also the electrical resistance of each element. The heater and thermocouple voltage measurement values were transferred to the control computer over an IEEE-488 data bus.

The control computer is a typical 286-based, PC-AT clone mounted in a standard 19-inch equipment rack. The control program was written using Modula-2 and serves to store all required data in a specified file on disc and determines power amplifier output settings using a very simple proportional-integral-derivative feedback control algorithm.

Reference 2: Copley Controls Corp. DC-Servo Amplifier Model #215 A; Keithley Model DDA-06 Data Acquisition and Control Unit; Hewlett Packard Model HP6269B Power Supply; Zenith Data Systems Computer System Model #DOD Z-248; Hewlett Packard Model HP3497A Data Acquisition System with Model 44422A 20 Channel Relay Multiplexer Assembly.

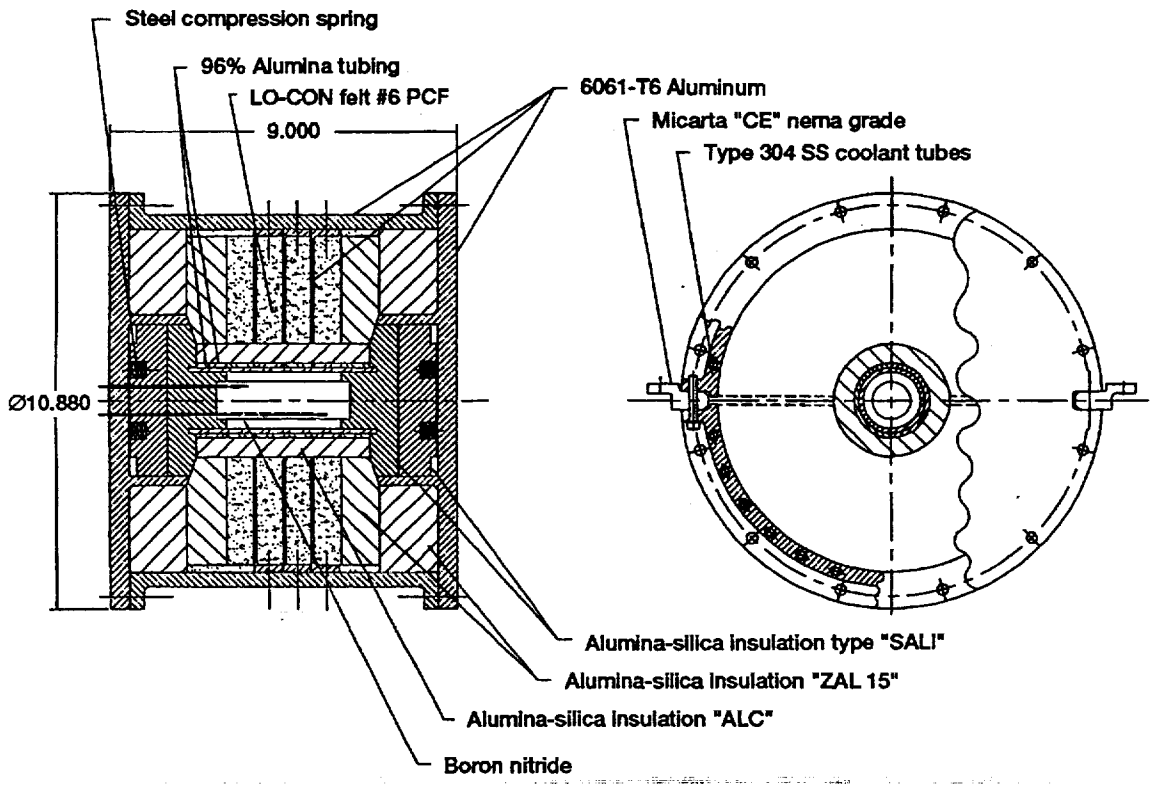

Figure 1.—Four zone "Muffle" furnace configuration.

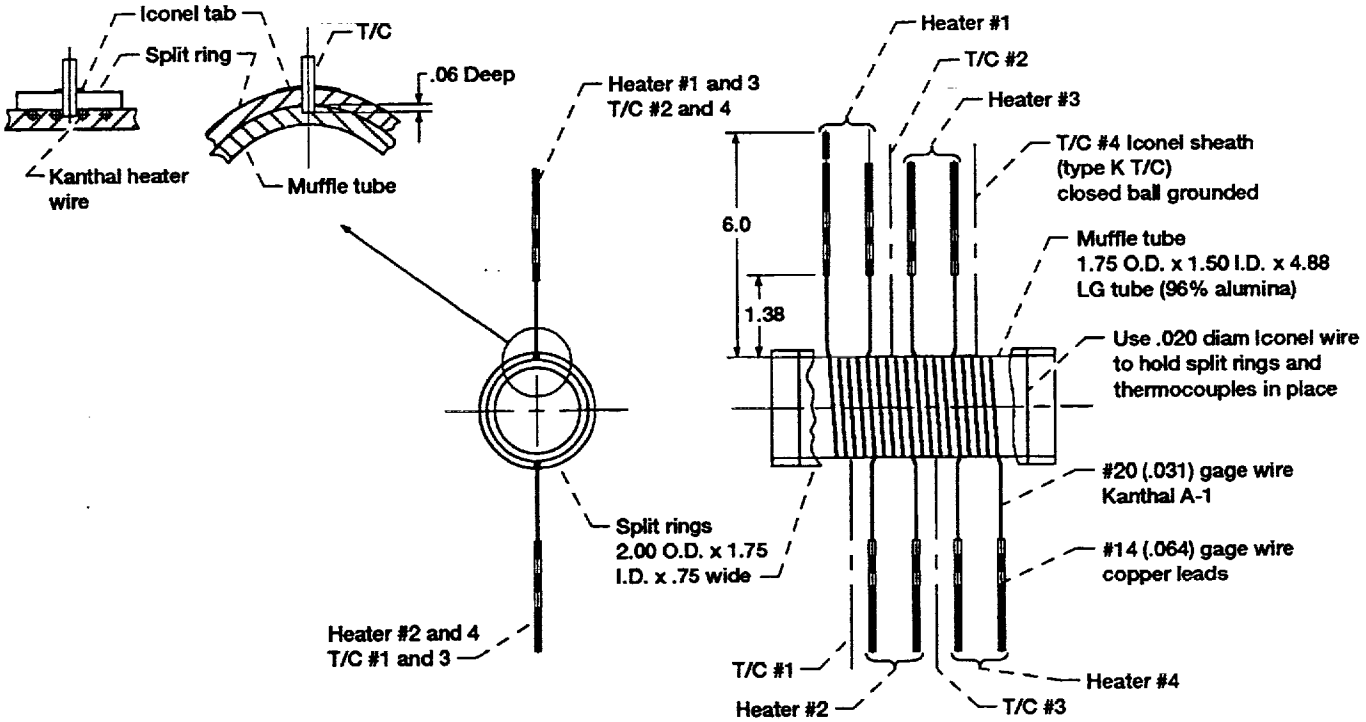

(a) Orientation of heaters and thermocouples.

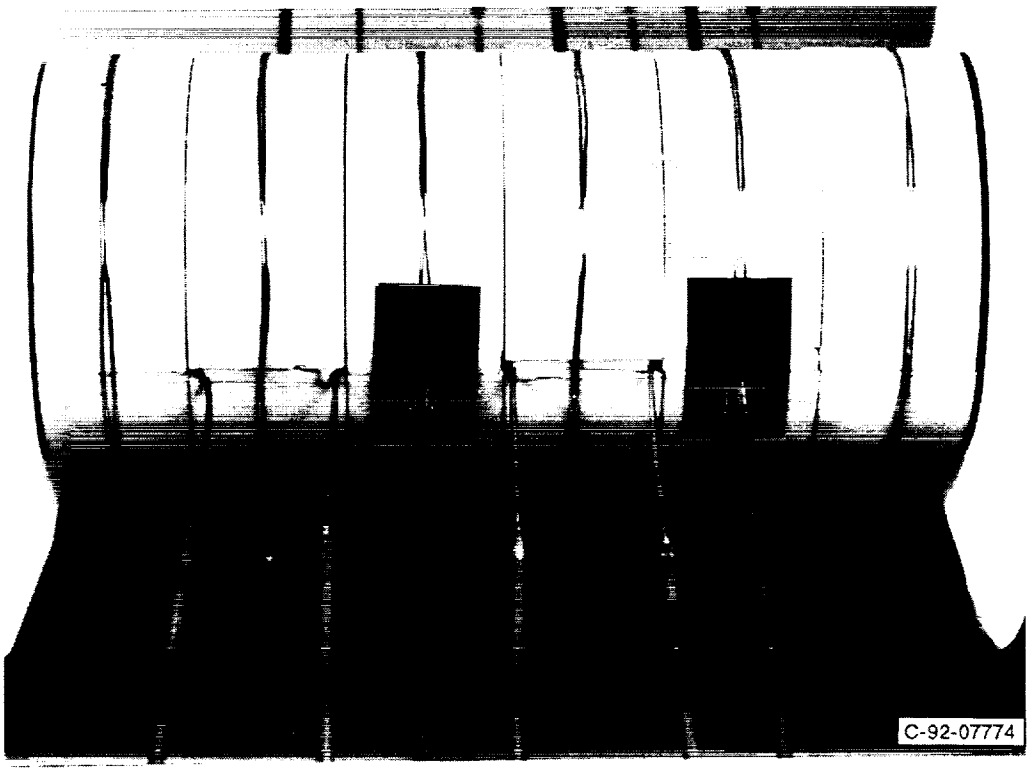

(b) Actual hardware closeup photo.

Figure 2.—Heaters and thermocouples.

ORIGINAL PAGE
BLACK AND WHITE PHOTOGRAPH

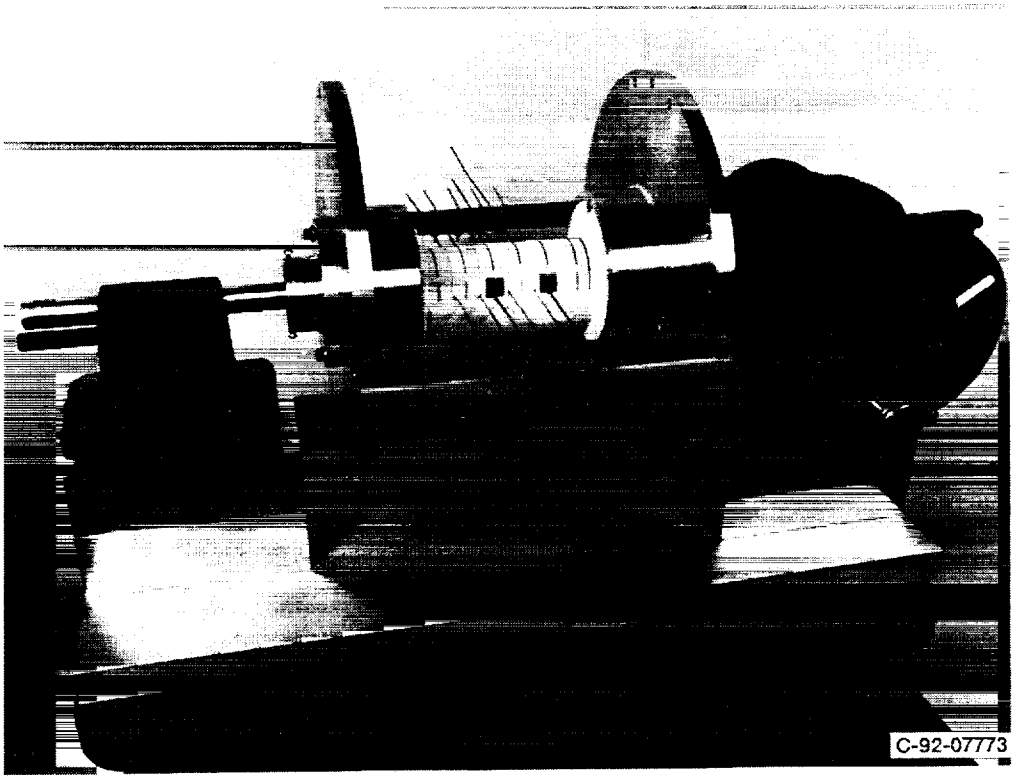

Figure 3.—Assembly and servicing fixture.

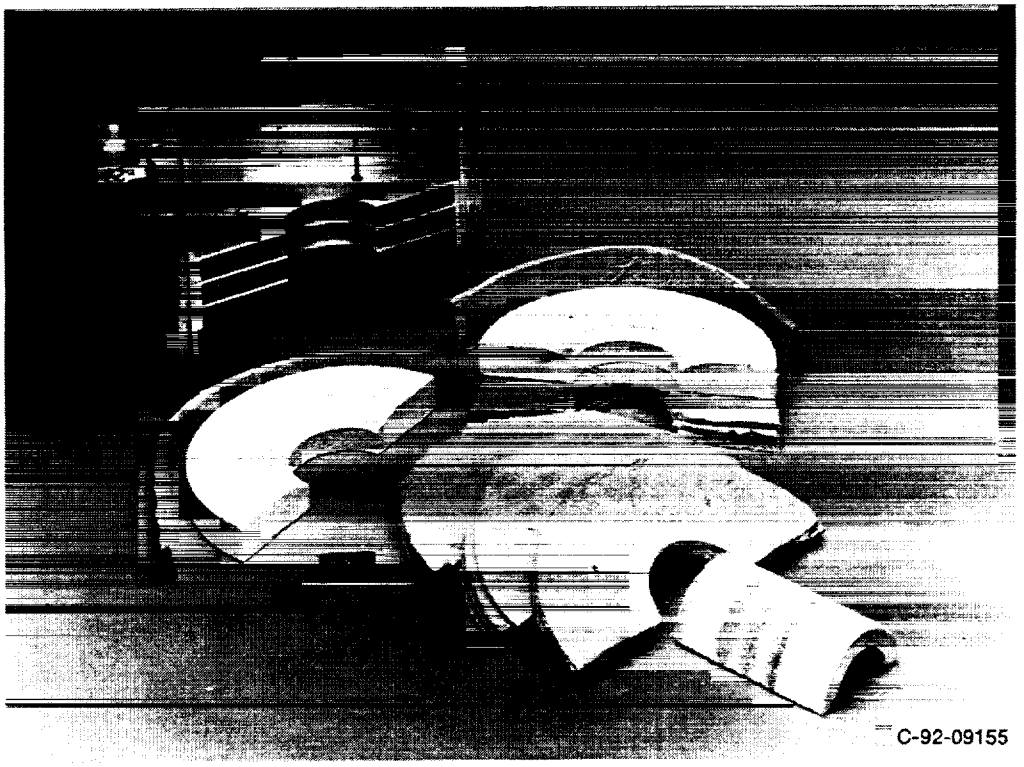

Figure 4.—Insulating components and radiation fins.

ORIGINAL PAGE
BLACK AND WHITE PHOTOGRAPH

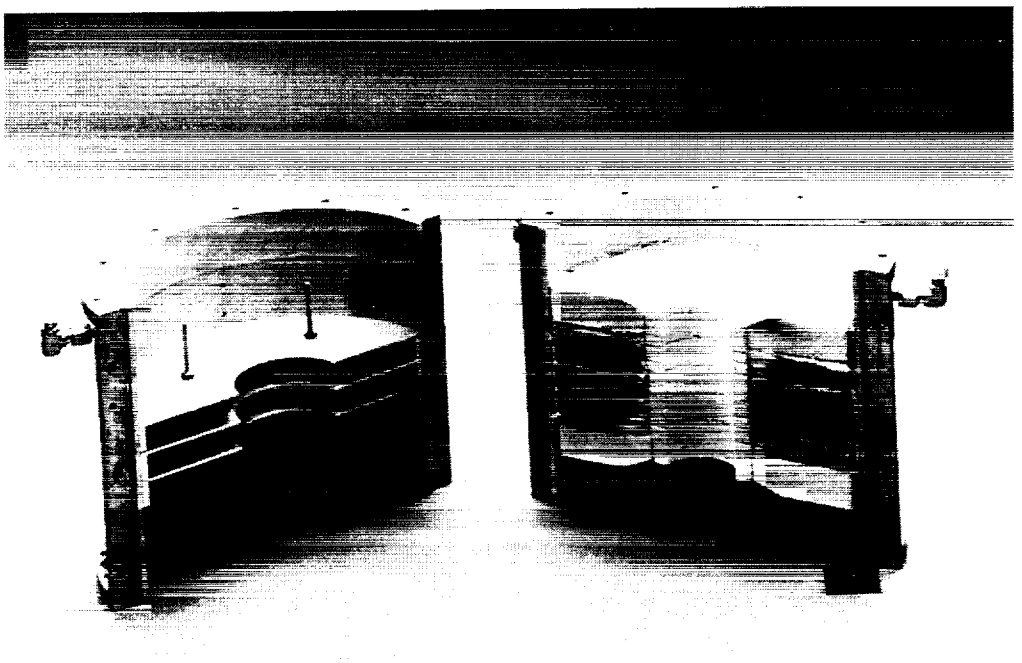

C-92-09154

Figure 5.—Insulating components and radiation fins assembled in furnace halves.

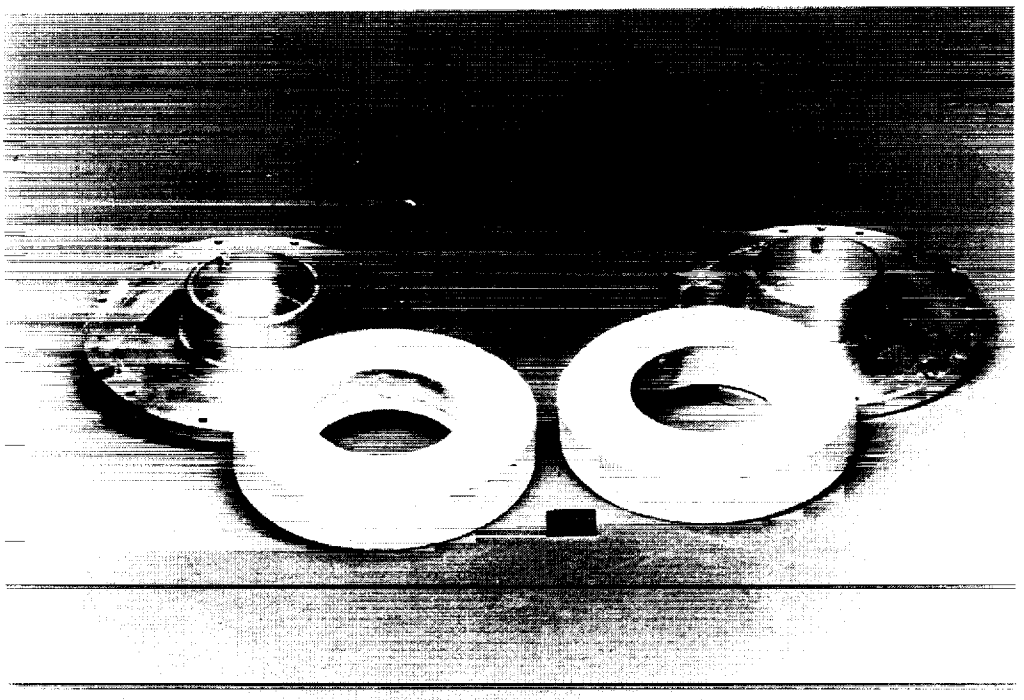

C-92-09158

Figure 6.—End pieces.

ORIGINAL PAGE
BLACK AND WHITE PHOTOGRAPH

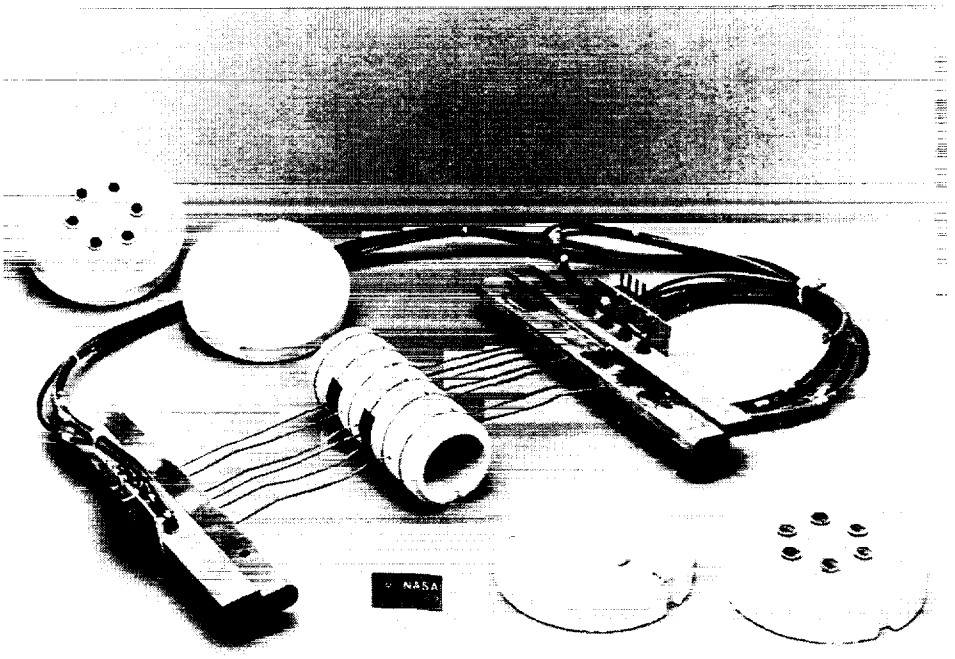

C-92-09157

Figure 7.—Heater coils and thermocouple wiring.

ORIGINAL PAGE
BLACK AND WHITE PHOTOGRAPH

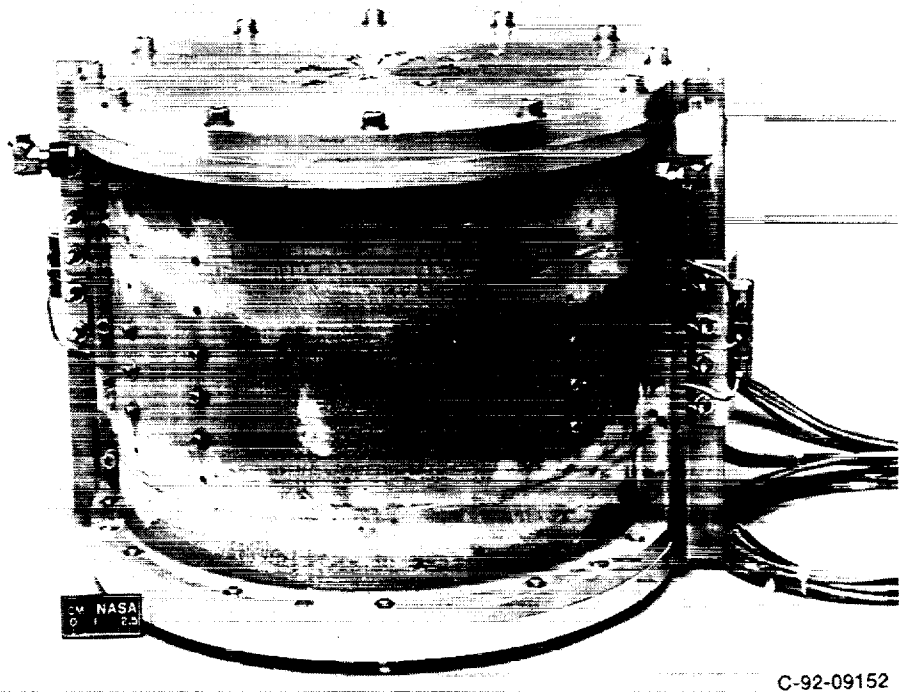

C-92-09152

(a) Front view

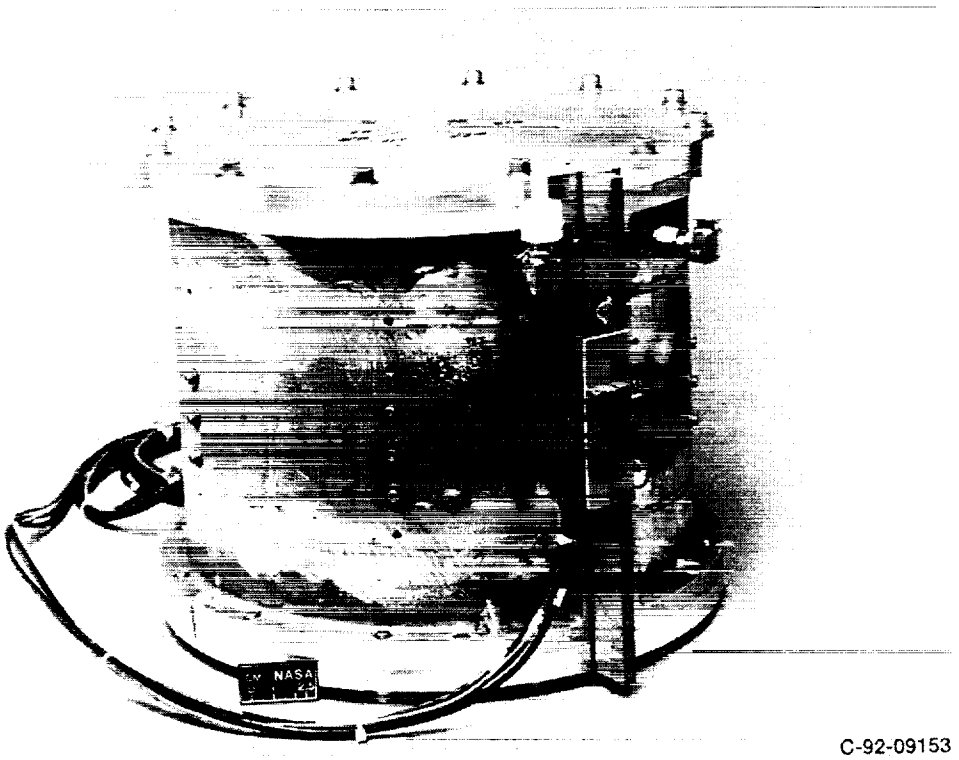

C-92-09153

(b) Side view

Figure 8.—"Muffle" furnace assembly.

ORIGINAL PAGE
BLACK AND WHITE PHOTOGRAPH

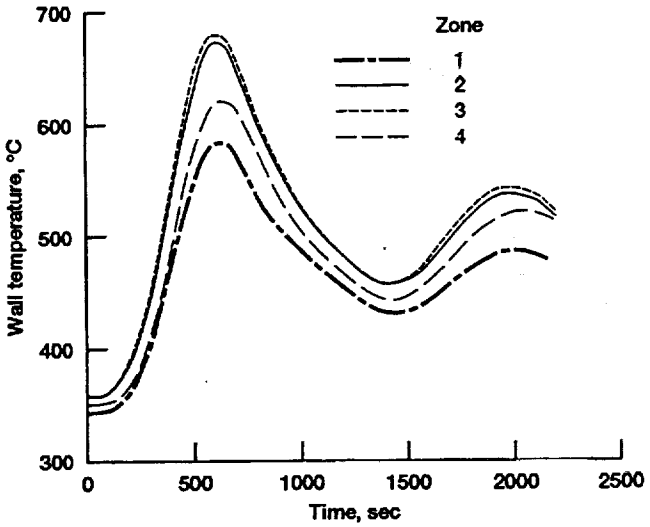

Figure 9.—Heater wall thermocouple reading versus time. Notes:
1. The controlling temperature was the temperature of the sample.
2. Variation around each set point is ±5 °C at best.

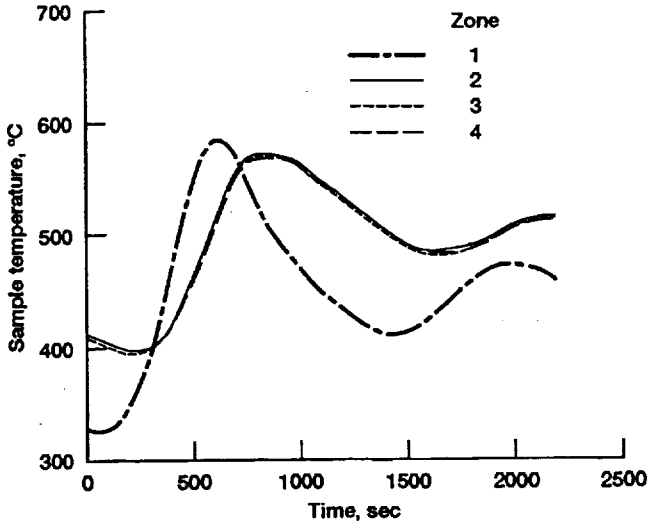

Figure 10.—Sample thermocouple reading versus time. Notes:
1. The controlling temperature was the temperature of the sample.
2. Variation around each set point is ±5 °C at best.

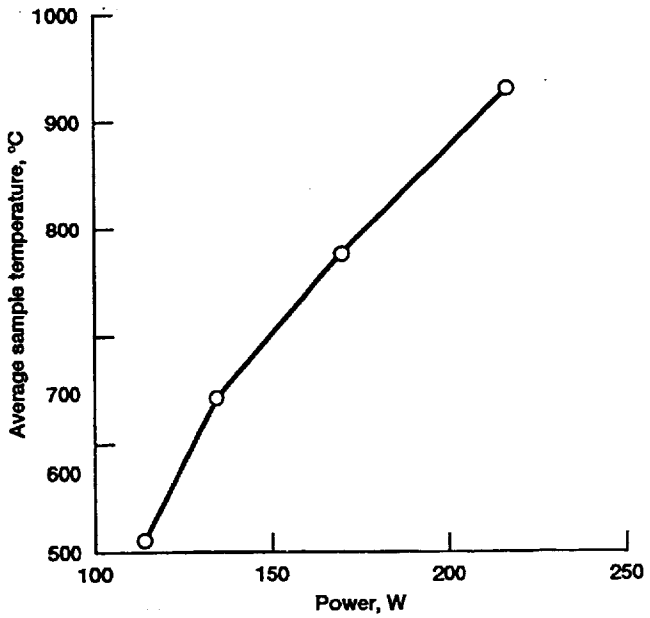

Figure 11.—Sample temperature versus power comsumption. Note: variation in the data was within the error of the thermocouple (±2 °C).

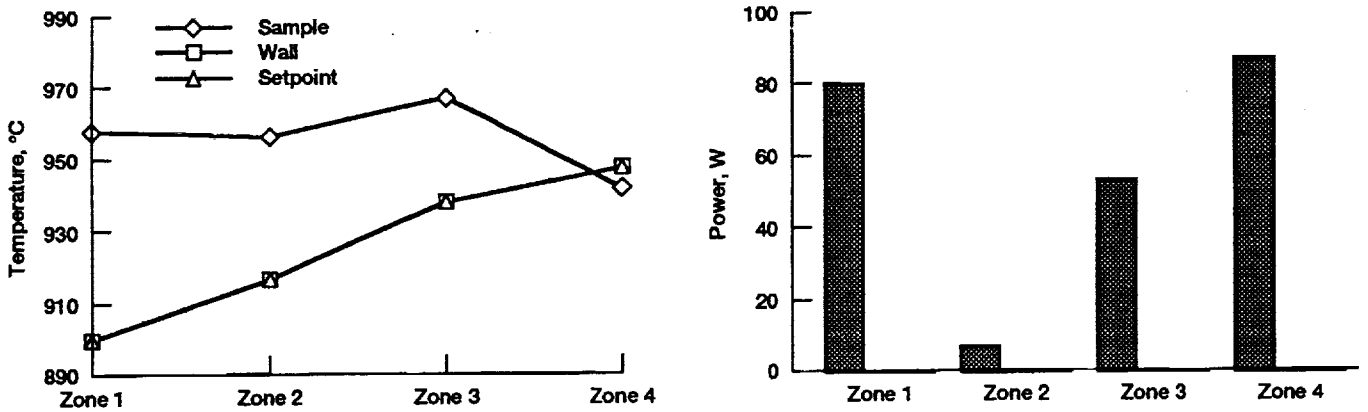

(a) Sample and wall temperatures versus numbered zones.

(b) Power distribution versus numbered zones.

Figure 12.—Creation of linear gradient profile case.

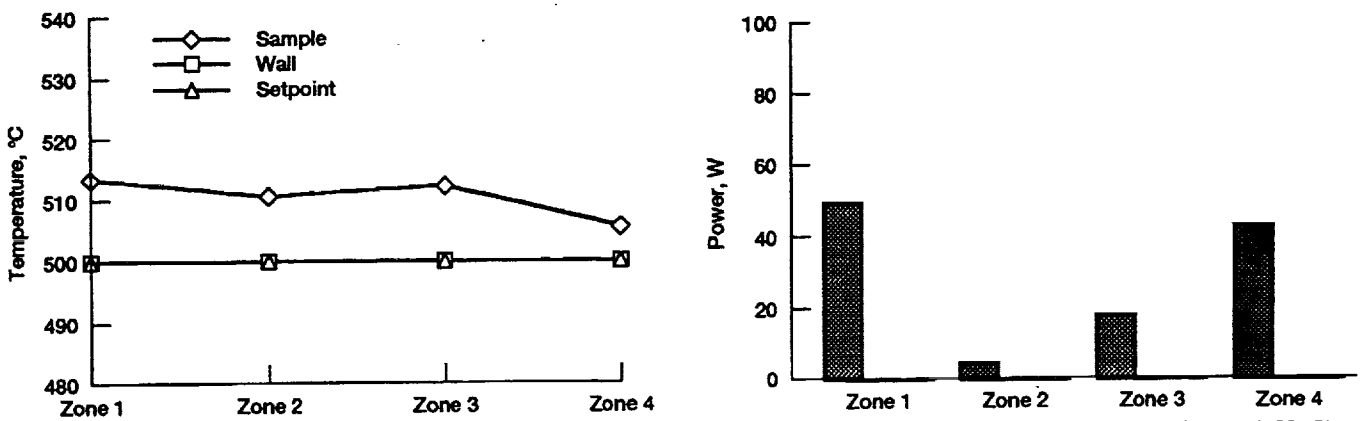

(a) Sample and wall temperatures versus numbered zones (500 °C).

(b) Power distribution versus numbered zones (500 °C).

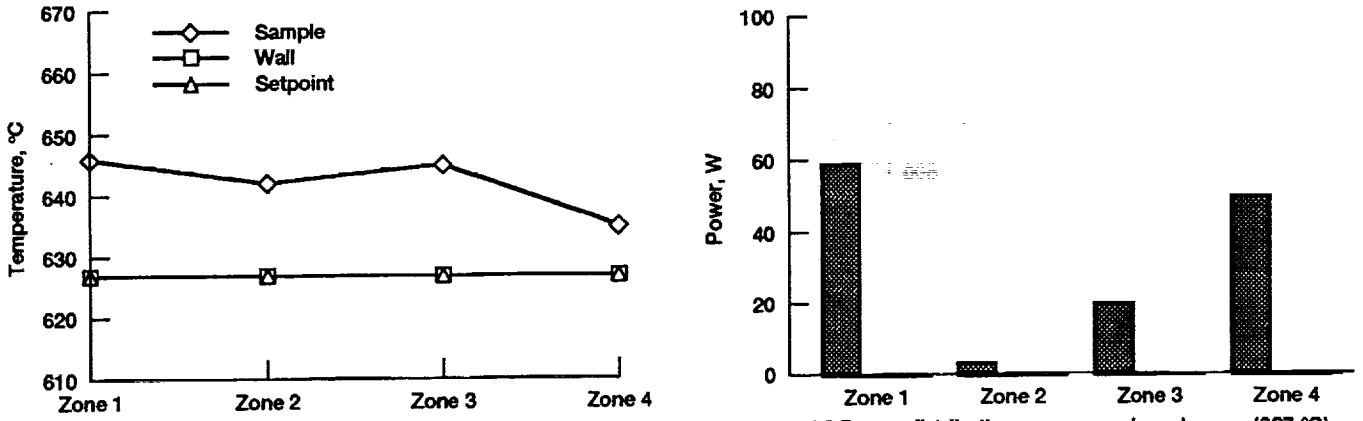

(c) Sample and wall temperatures versus numbered zones (627 °C).

(d) Power distribution versus numbered zones (627 °C).

Figure 13.—Creation of isothermal wall temperature cases (500 °C and 627 °C).

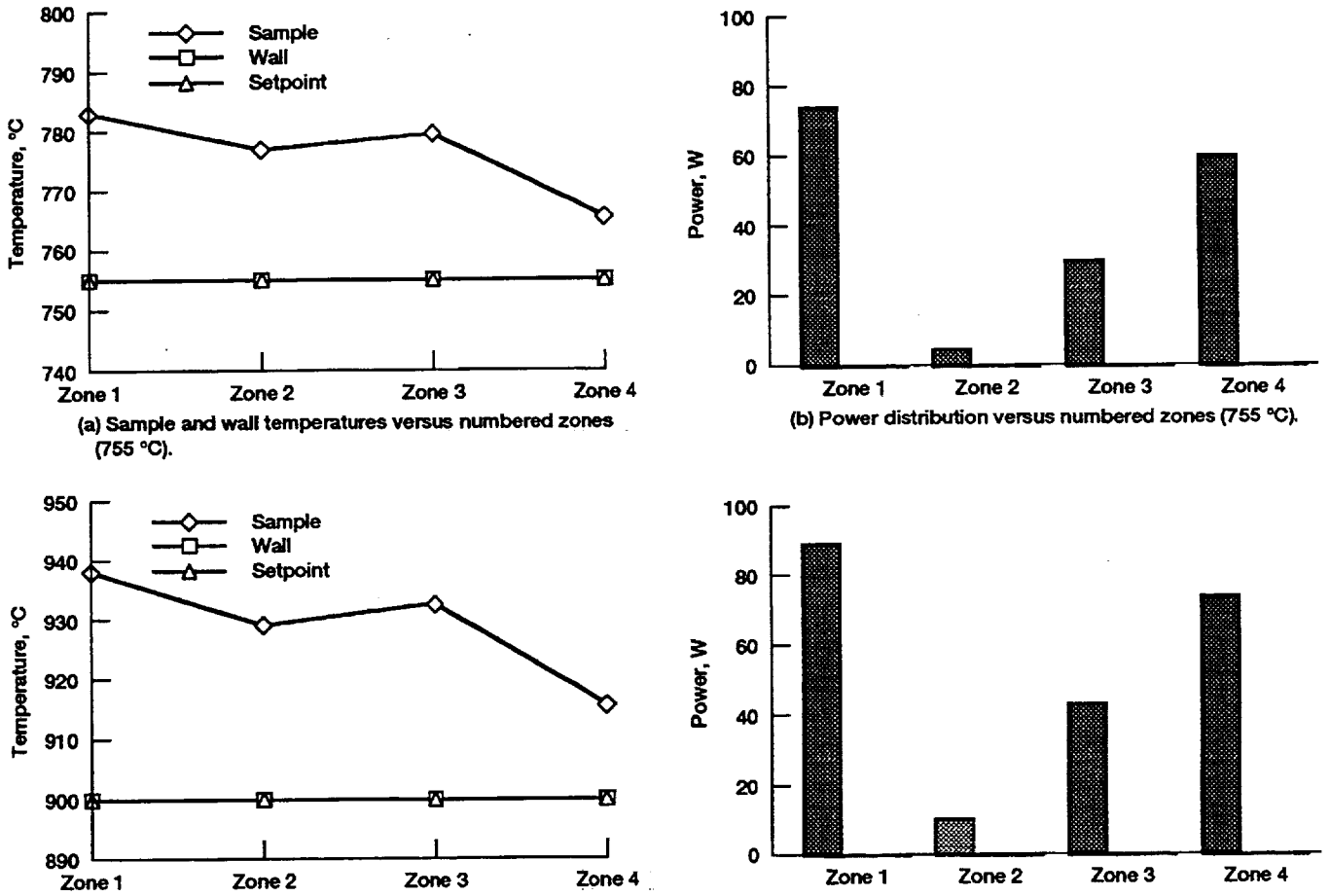

(a) Sample and wall temperatures versus numbered zones (755 °C).

(b) Power distribution versus numbered zones (755 °C).

(c) Sample and wall temperatures versus numbered zones (900 °C).

(d) Power distribution versus numbered zones (900 °C).

Figure 14.—Sample and heater temperatures and power distribution versus numbered zones for 755 °C and 900 °C.

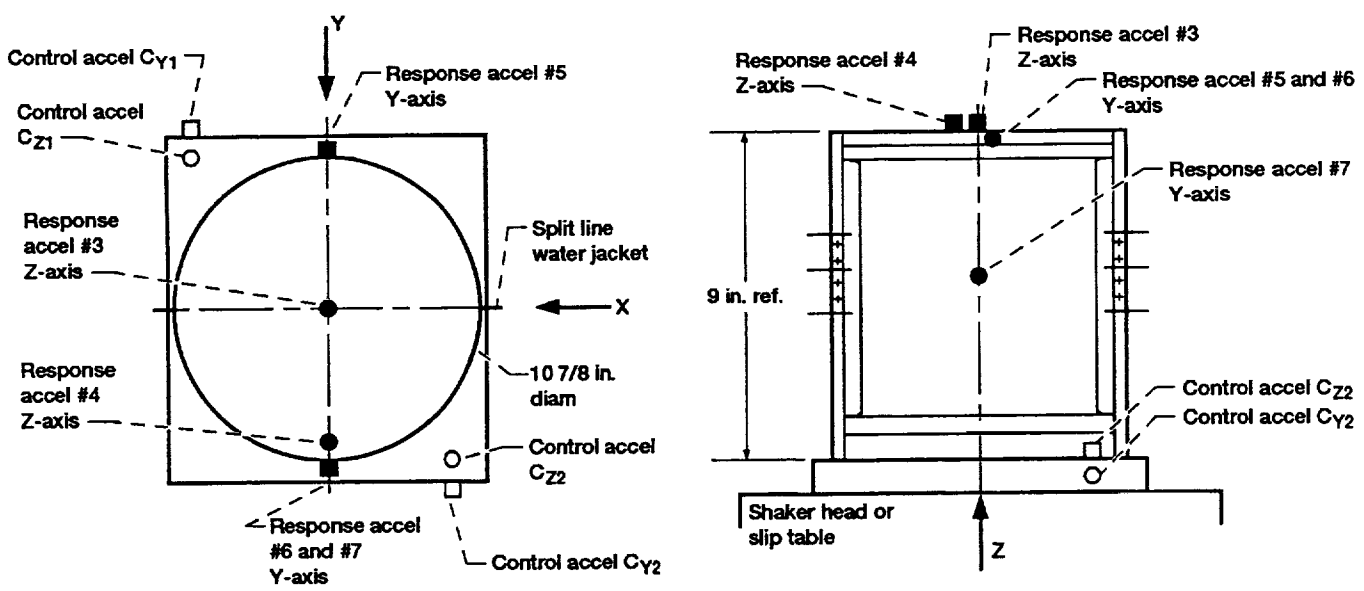

(a) Plan view (10 7/8 in. diameter furnace).

(b) Elevation view (9 in. high cylindrical furnace).

Figure 15.—Vibration test configuration-instrumentation locations.

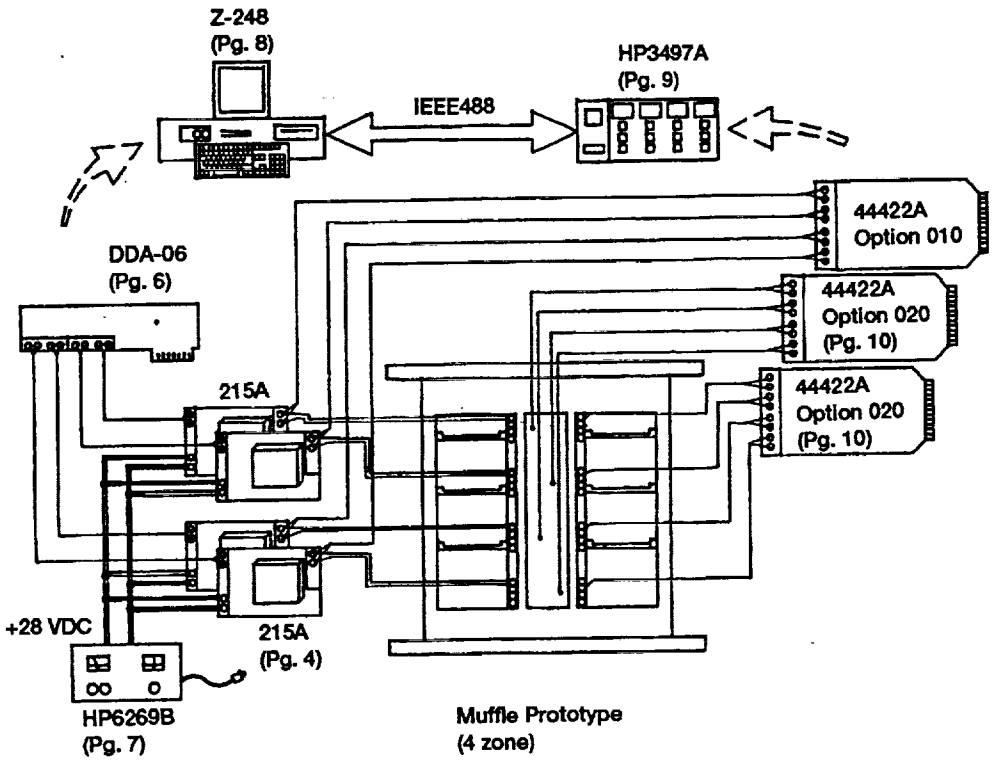

Figure 16.—Furnace test facility control schematic.