NASA Technical Memorandum 105714

Rocket Engine Diagnostics Using Qualitative Modeling Techniques

Michael Binder, William Maul, and Claudia Meyer
Sverdrup Technology, Inc.
Lewis Research Center Group
Brook Park, Ohio

and

Amy Sovie
National Aeronautics and Space Administration
Lewis Research Center
Cleveland, Ohio

Prepared for the
28th Joint Propulsion Conference and Exhibit
cosponsored by the AIAA, SAE, ASME, and ASEE
Nashville, Tennessee, July 6–8, 1992

ROCKET ENGINE DIAGNOSTICS USING QUALITATIVE MODELING TECHNIQUES

Michael Binder
William Maul
Claudia Meyer
Sverdrup Technology, Inc.
Lewis Research Center Group
2001 Aerospace Parkway
Brook Park, Ohio 44142

Amy Sovie
NASA Lewis Research Center
21000 Brookpark Road
Cleveland, Ohio 44135

This work was supported , in part , by the NASA Lewis Research Center under contract NAS3-25266

Abstract

Researchers at the NASA Lewis Research Center are presently developing qualitative modeling techniques for automated rocket engine diagnostics. A qualitative model of a turbopump interpropellant seal system has been created. The qualitative model describes the effects of seal failures on the system steady-state behavior. This model is able to diagnose the failure of particular seals in the system based on anomalous temperature and pressure values. The anomalous values input to the qualitative model are generated using numerical simulations. Diagnostic test cases include both single and multiple seal failures.

Introduction

Health monitoring is an active area of research for space propulsion systems. Automated diagnosis of rocket engine anomalies is one area presently being investigated. Traditionally, diagnostic algorithms have been based either on large amounts of test data, or on heuristics derived from past experience. Such techniques lack comprehensive descriptions of the physical processes which govern system behavior, and so may not be effective when unanticipated conditions arise. Diagnostic algorithms which use physical models are more effective under these circumstances. A qualitative model is a highly structured description of system behavior based on simplified first-principle physical relationships. Rather than providing precise numerical predictions of system behavior, qualitative models provide information about the state of system parameters relative to their critical operating points. The purpose of this study is to demonstrate that qualitative model-based diagnostic techniques can be applied to space propulsion systems.

Qualitative models have been a subject of research in artificial intelligence for many years. They are well-suited to automated diagnostics, and several such diagnostic applications have already been developed for mechanical and electronic systems [1,2,3]. Although they are simpler and less precise than numerical simulations, qualitative models offer a level of detail more appropriate for diagnostic reasoning. Their simplicity also means that they require less detailed design information to construct, and less computer storage and CPU-time to execute. Qualitative models offer highly structured descriptions of system behavior. This helps to ensure a complete representation, which is often difficult to attain using expert systems. The structure of the models also makes them easier to maintain and modify than expert systems.

A component-based modeling approach has many advantages for diagnosis of space propulsion systems. Using this approach, system models are created by connecting discrete models of their components. The model structure therefore parallels the system's physical configuration, offering the user an intuitive method for model construction [4]. The component-based approach also facilitates diagnosis because system anomalies are typically the result of failure for a specific component. A number of different techniques for model solution are available. The solution method developed by Kuipers [5] has been used here because it allows a flexible level of modeling detail.

The study discussed in this paper is part of an effort to provide an advanced qualitative modeling capability for rocket engine diagnostic applications. In this study, a qualitative model has been created for the Space Shuttle Main Engine (SSME) High Pressure Oxidizer Turbopump (HPOTP) interpropellant seal package.

This model has been used to successfully diagnose single and multiple seal failures based on pressure and temperature data produced by numerical simulations. These results demonstrate the applicability of qualitative models to automated rocket engine diagnostics.

The theoretical basis for qualitative model-based diagnostics is presented here as technical background. The derivation of the qualitative model for the HPOTP seal system is then discussed, followed by the results of several diagnostic test cases.

Technical Background Information

A qualitative model consists of a set of symbolic equations, or *constraints*. Each constraint defines a mathematical or logical relationship between two or three system parameters. Model parameter values are represented symbolically, rather than numerically (press_high instead of 2500 psi, for example). The distinct qualitative values which parameters may have are referred to as *landmarks*. The ordered set of landmarks for a parameter and the intervals between them are referred to as the parameter's *quantity space* [5,6,7].

Added definition is given to a constraint through *corresponding value* (or *cval*) sets, which specify the relationships between landmark values for all parameters in the constraint [5,6,7]. For example, consider a constraint governing conservation of mass flow in a cavity.

flow1 + flow2 = flow3

A corresponding value set for this constraint might be

(flow1_high , flow2_nom , flow3_high).

This cval set specifies that when the flow1 is at its 'flow1_high' landmark and flow2 is at its 'flow2_nom' landmark, then flow3 should be at its 'flow3_high' landmark.

Detailed corresponding value sets for each constraint reduce the amount of ambiguity in the model, thereby providing more precise solutions. Cvals distinguish between linear and quadratic proportionalities, for example. Corresponding value sets can be developed heuristically or from numerical data. The quantity spaces that are derived from intuitive knowledge of the system are typically coarser than those derived using data; however, useful information regarding nominal and anomalous system behavior is still provided. Such a capability is especially critical when considering a conceptual system or one for which limited data are available.

For any given physical system, multiple qualitative models may exist, each valid for a particular operating regime and each having its own quantity space, constraints and corresponding value sets. A diagnostic program capable of providing coverage of propulsion systems under all operating conditions (start-up, throttling, shut-down,etc.) must include a mechanism for switching between models as the operating regime changes.

The solution of a qualitative model is the determination of a set of parameter values which satisfy all model constraints and which are consistent with the model inputs. The solution process described in this paper was developed by Kuipers [3,7,8]. Multiple landmarks and cval sets may be defined, allowing a flexible level of modeling detail. Each parameter value consists of its qualitative magnitude and time derivative. The models developed for this study involve only steady-state behavior, and therefore only parameter magnitudes are used. Although parameter values are specific to the system being modeled and the precision of the model, a generic solver applicable to any system is desired. This is achieved by solving constraints about each of the corresponding value sets and merging the results.

To illustrate the process, consider the solution of a single constraint with one corresponding value set.

constraint
flow1 + flow2 = flow3

corresponding value set
(flow1_veryhigh , flow2_low , flow3_high)

In general, more than one solution may exist for the constraint. Input to the model (from user or from sensors) specifies the values of some parameters; those not specified will originally be assigned to have all values in their respective quantity spaces. All possible parameter values are assembled into a set of *candidate solutions* for the constraint. These candidate solutions are evaluated using the constraints, and only solutions which are consistent with the model and with the input values are retained. In order to apply the generic solver, candidate solutions are reduced to a *generalized* form by comparing them with the corresponding values. The generalized values that a parameter may have are (>) (solution is greater than cval), (=) (solution is equal to cval), or (<) (solution is less than cval). For example, suppose that two candidate solutions to the above constraint are

Candidate Solution 1:
(flow1_veryhigh, flow2_verylow, flow3_veryhigh)

Candidate Solution 2:
(flow1_high , flow2_low , flow3_nominal)

By comparison with the above corresponding values of (flow1_veryhigh , flow2_low , flow3_high), these candidate solutions are reduced to the generalized solutions

Candidate Solution 1: (= , < , >)
Candidate Solution 2: (< , = , <)

Each type of constraint (addition, proportionality, etc.) has an associated truth table. These truth tables are generic; they are applicable, without modification, to any system model [5]. The truth table for addition is given in Figure 1 (using generic variable names A, B, and C in place of flow1, flow2, and flow3 respectively). The generalized parameter values for each candidate solution are compared with the truth table of the appropriate constraint type to determine if that solution is consistent. In Solution 1 discussed above, the generalized values of the flows do not fit any pattern in the addition truth table and so this candidate solution is discarded. The generalized values for Solution 2, however, do match a pattern given in the table, and so this candidate solution is retained. In constraints with more than one cval set, the candidate solution must be consistent with all corresponding values in order to survive. This filtering process is repeated for each constraint in the model, successively reducing the range of possible parameter values. The final result is a set of consistent solutions for the entire model [5].

This qualitative solver can be used in fault detection and diagnostic applications. Given a set of input data for the system and using a nominal qualitative model, an anomaly is indicated if the solver is unable to find any consistent solutions. In order to isolate the sources of the anomalous data, an algorithm systematically 'suspends' the constraints on system parameters until it isolates those which, if eliminated, produce a solution consistent with the anomalous input data. The components governed by the isolated constraints are thereby determined to be possible sources of the anomaly. The range of output parameter values allowed by the constraint suspension may also provide information regarding the nature and extent of the component failure [1,8].

Generating the Qualitative Model of the IPS

In this study, a simplified High Pressure Oxidizer Turbopump (HPOTP) interpropellant seal (IPS) package was selected for qualitative modeling; a schematic of the modeled system is given in Figure 2. A helium purge and a series of annular seals and drain lines are used to prevent the mixing of gaseous oxygen and fuel-rich combustion products. The modeled system differs from the actual system in that an annular seal, seal 1, has been used to approximate the labyrinth seal. The slinger seal which gasifies the leakage from the bearing coolant flow is not modeled. Thus, the inlet to the qualitative model is the gaseous oxygen downstream of the slinger. The seal system was chosen because of its importance during both SSME ground test firings and flight and because of the emphasis placed on the IPS during post-test diagnostic evaluations [9]. Two of the five parameters monitored by the SSME flight redline-limit system are associated with the interpropellant seal system [10].

In developing the qualitative models of the IPS, the following first-principle equations provided the starting point for the qualitative constraints:

* Flow through a one-dimensional channel (seal or vent)

(1) $$\dot{\omega} = \rho * A_{seal} * \upsilon_{fluid}$$

* Mass conservation in a cavity

(2) $$\sum_{i}^{inlet} (\dot{\omega}_i) = \sum_{k}^{outlet} (\dot{\omega}_k)$$

* Energy conservation in a cavity (stagnation conditions assumed)

(3) $$\sum_{i}^{inlet} (\dot{\omega}_i * T_i) = \sum_{k}^{outlet} (\dot{\omega}_k * T_k)$$

for mixture of fluids with common heat capacities and reference temperature.

These quantitative relationships are transformed into qualitative constraints by eliminating constants, and by partitioning the equations into qualitative constraints representing relationships between two or three variables only. Finally, knowledge of the system's operation, and hence the relationships among the modeled parameters, suggests certain simplifications. These simplifications reduce the complexity of the qualitative model and facilitate the solution process but preserve all of the important qualitative characteristics of the original quantitative relationships. For example, although the velocity term in the mass flow equation is proportional to the pressure drop across the vent or seal, it can be adequately approximated by the source pressure alone. This is possible because, in the IPS, the source pressure is much greater than the discharge pressure in all cases. Equation (1) above therefore simplifies to the following qualitative constraint:

(4) $$\text{flow} = C_{seal} * P_{source}$$

where C is the seal's clearance with shaft.

All non-linearities are defined using corresponding values, only linear terms appear in the constraints themselves. The final constraints for all of the seals, vents and cavities are given in Appendix A.

In this investigation, emphasis has been placed on verifying the predictions of the qualitative model using numerical data. The landmark values and corresponding value sets are based on steady-state numerical simulations of individual seal failures [11]. The failure scenario of seal wear is simulated as an increase in the clearance between the shaft and seal. Two failure simulations have been run for each of the five seals. For each seal, the clearance is increased by 50 % from nominal in one case, and by 300 % from nominal in the other. From the results of the simulations, distinct landmark values have been identified for each parameter in the qualitative model. Each failure scenario also defines the corresponding value sets for the constraints. Referring to Figure 2, for example, the constraint linking c1, p0, and f01 has only two failure scenarios and so there are only three corresponding values (including the nominal case). They are

(c1nom p0nom f01nom)
(c1h p0nom f01h1)
(c1vh p0nom f01h2)

The quantity spaces for all variables and their associated numerical values are given in Table 1. The corresponding value sets for each constraint are given in the model description in Appendix A.

Results and Discussion

In order to validate the qualitative model, several diagnostic test cases have been simulated using the numerical model described above. The test cases represent simultaneous failure of multiple seals, as described in Table 2. In the diagnostic scenarios, pressure and temperature data from the simulations are reduced to qualitative values by comparing them with the landmark thresholds of each parameter (Table 1). The qualitative values are then input to the qualitative model for diagnostic evaluation.

A slightly unconventional approach to constraint suspension has been used for fault diagnosis in this study. Rather than suspending equations in the model, this approach suspends the requirement that all seal clearances be nominal (a different form of constraint). During the fault isolation process, all seal clearance values are set to nominal except those which are being hypothesized as the fault sources. The suspect seal clearances are not set but are allowed to 'float'; these clearances are calculated by the solver. If off-nominal clearance values are found which are consistent with the input, those seals being floated represent a possible source of the anomaly. Furthermore, the off-nominal clearance values give information about the degree of seal degradation present.

Consider test case 1 as described in Table 2, for example. System pressures and temperatures have been set to values derived from the simulation of a 50 % increase in both c1 and c2. In this case, no single-seal failure hypothesis produces a solution consistent with the model input. In fact, seals 1 and 2 form the only combination of two seals which, when floated simultaneously, produce a consistent solution. The model therefore correctly isolates seals 1 and 2 as the sources of the anomaly. The precision of the clearance estimates for c1 and c2 reflect the level of detail given in the model landmarks and corresponding values.

Table 2 summarizes the results of the diagnostic test cases. In each case, the qualitative model correctly isolates the anomalous seals and their approximate clearance changes. The model is therefore capable of isolating multiple seal failures even though it is constructed using only data from individual seal failures.

This study demonstrates the successful application of qualitative modeling techniques to a highly interconnected non-linear system. This demonstration therefore suggests that qualitative models are more broadly applicable to rocket engine components and systems in general. Qualitative models for valves, pumps, turbines and combustors can be created and linked to represent entire engine systems. Such models may enable the development of practical model-based control and condition monitoring systems for rocket engines. This capability could be applied to ground-based pre-flight check-out and post-flight analysis, and to on-board monitoring and control.

Summary

Diagnostic reasoning using qualitative models offers several advantages over more conventional techniques such as numerical models, and expert systems. Qualitative models are simpler than numerical models and offer a more complete system representation than expert systems. Their diagnostic capability has been demonstrated here by applying qualitative modeling techniques to the SSME HPOTP interpropellant seal system. In each of the seal failure test cases considered, the model successfully isolates the sources of anomalous pressure and temperature readings. Although landmarks and corresponding values are defined using single seal failure data only, the model has proven capable of providing diagnostic information on simultaneous multiple seal failures. These results, and those of other qualitative model-based diagnostic demonstrations elsewhere, indicate the potential of this technique for rocket engine health monitoring.

Acknowledgements

This work was supported under contract NAS3-25266. The authors would like to thank Todd Quinn for his contributions to this research. The authors also wish to thank Ben Kuipers and the University of Texas at Austin for the use of the QSIM program, which was instrumental to the successful completion of this study.

References

1. Hamilton, T. "HELIX - A Helicopter Diagnostic System Based on Qualitative Physics", Artificial Intelligence in Engineering, 1988, Vol 3, No. 3.

2. Dvorak, D. and Kuipers, B. "Process Monitoring and Diagnosis- A Model-based Approach", IEEE Expert, June 1991, pp. 67-74.

3. Tulpule, S. and Winston, H. Advanced Computational Techniques in Rocket Engine Diagnostics - Final Report (NAS3-25634), NASA CR-187064, January 1991.

4. DeKleer, J. and Brown, J. A Qualitative Physics Based on Confluences, "Qualitative Reasoning About Physical Systems" (editor Bobrow), MIT Press 1985.

5. Kuipers, B. Qualitative Simulation, Artificial Intelligence, 1986, No.29, pp.289-338.

6. Farquar, A. and Kuipers, B. QSIM User's Manual, Ver. 0.4, Artificial Intelligence Laboratory, University of Texas at Austin, Report AI90-123, January 1990.

7. Throop, D. QSIM Maintainer's Guide, Artificial Intelligence Laboratory, University of Texas at Austin, Report AI90-124, January 1990.

8. Davis, R. "Diagnostic Reasoning Based on Structure and Behavior", Artificial Intelligence, 1984, No. 24, pp. 347-410.

9. Taniguchi, M.H. Failure Control Techniques for the SSME, Phase I Final Report, NASA CR-179224, 1986.

10. Surko, P. Reusable Rocket Engine Turbopump Health Management System Task 1: Expansion of Existing Health Monitoring Logic, (Contract NAS3-25822), 1990.

11. Paxson, D. A Simplified Model for the SSME HPOTP Shaft Seal System, Second Annual Health Monitoring Conference for Space Propulsion Systems, Cincinnati Ohio, November 1990.

A \ B	<	=	>
<	<	<	< = or >
=	<	=	>
>	< = or >	>	>

A+B = C

(example: If A is >
and B is =
then C is >)

C

Figure 1
Truth Table for ADD Constraints *(A, B, C assumed positive)*

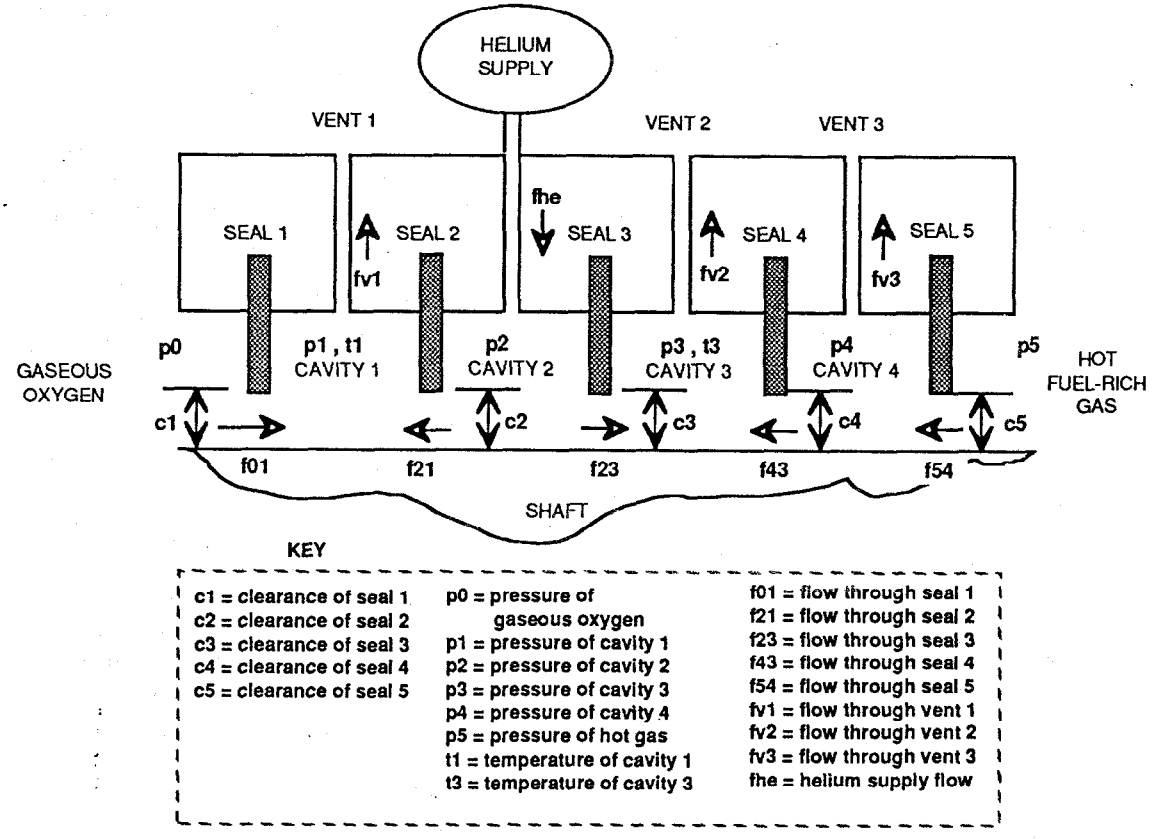

Figure 2
Schematic of Simplified HPOTP Interpropellant seal

Table 1 - Quantity Spaces for Seal System Input Parameters

Parameter Names	Landmark Values Numerical Value / Qualitative Value						
c1: clearance of seal 1 (in)	.005 c1nom	.0075 c1h	.020 c1vh				
c2: clearance of seal 2 (in)	.015 c2nom	.023 c2h	.060 c2vh				
c3: clearance of seal 3 (in)	.015 c3nom	.023 c3h	.060 c3vh				
c4: clearance of seal 4 (in)	.003 c4nom	.0045 c4h	.012 c4vh				
c5: clearance of seal 5 (in)	.003 c5nom	.0045 c5h	.012 c5vh				
p1: pressure of cavity 1 (psi)	35.4 p1l2	39.9 p1l1	42.3 p1nom	44.4 p1h1	48.6 p1h2	59.6 p1h3	
p2: pressure of cavity 2 (psi)	86.6 p2l2	179. p2l1	229. p2nom				
p3: pressure of cavity 3 (psi)	16.9 p3l2	18.2 p3l1	19.0 p3nom	19.8 p3h1	21.3 p3h2	33.4 p3h3	35.8 p3h4

Table 2
Results from Diagnostic Test Cases (1 to 9)
Simultaneous Multiple Seal Failures

Test Case	Inputs to Numerical Model	Qualitative Pressure and Temperature Values Derived from Output of Numerical Simulation						Results of Diagnosis Based on Qualitative Model
		p1	p2	p3	p4	t1	t3	
1	c1 +50%, c2 +50%	(p1h2, p1h3)*	p2l1	p3l1	p4nom	(t1l1, t1nom)	(t3nom, t3h1)	c1 = (c1nom,c1vh) c2 = c2h
2	c1 +100%, c2 +100%	(p1h2, p1h3)	(p2l2, p2l1)	(p3l2, p3l1)	p4nom	(t1l1, t1nom)	(t3nom, t3h1)	c1 = (c1nom,c1vh) c2 = (c2h,c2vh)
3	c3 +50%, c4 +50%	p1l1	p2l1	p3h2	p4l1	(t1l1, t1nom)	(t3nom, t3h1)	c3 = c3h c4 = c4h
4	c3 +100%, c4 +100%	(p1l2, p1l1)	(p2l2, p2l1)	(p3h2, p3h3)	(p4l2, p4l1)	(t1l1, t1nom)	(t3nom, t3h1)	c3 = (c3h,c3vh) c4 = (c4h,c4vh)
5	c2 +50%, c3 +50%	p1nom	(p2l2, p2l1)	p3nom	p4nom	t1nom	t3nom	c2 = (c2nom,c2vh) c3 = (c3nom,c3vh)
6	c2 +100%, c3 +100%	p1nom	(p2l2, p2l1)	p3nom	p4nom	t1nom	t3nom	c2 = (c2nom,c2vh) c3 = (c3nom,c3vh)
7	c2 +50%, c3 +50%	p1nom	(p2l2, p2l1)	p3h2	p4l1	t1nom	(t3nom, t3h1)	c2 = (c2nom,c2vh) c3 = (c3nom,c3vh)

Appendix A

Qualitative Model of the HPOTP Seal System

```
*       List of variables (Refer to Figure 2 in text):
*
*       Seals are numbered from 1 to 5, with #1 being the labyrinth downstream of the LOX slinger, and # 5 being
*       the annular seal at the hot gas end of the package.
*       c1 = clearance of seal 1                c2 = clearance of seal 2
*       c3 = clearance of seal 3                c4 = clearance of seal 4
*       c5 = clearance of seal 5
*
*       Vents are numbered 1, 2, and 3 and allow exit flow for cavities 1, 3, and 4 respectively. The helium supply
*       flow for the purge seal is connected to cavity 2.
*       cv1 = diam. of vent line 1              cv2 = diam. of vent line 2
*       cv3 = diam. of vent line 3              che = diam. of helium line
*
*       Cavities are numbered from 0 to 5, left to right. Cavity 0 (left side) is the slinger discharge and Cavity 5
*       (right side) is the hot gas leakage from turbine.
*       p0 = GOX pressure (constant)            p1 = pressure of cavity 1
*       p2 = pressure of cavity 2 (helium purge)
*       p3 = pressure of cavity 3               p4 = pressure of cavity 4
*       p5 = pressure of hot gas leakage.
*       t1 = temperature of cavity 1            t3 = temperature of cavity 3.
*
*       Flows through seals and vents:
*        (Seal flows are labeled with the numbers of the source and sink cavities. f01, for example, is flow from
*         cavity 0 to cavity 1)
*       f01 = flow through seal 1               f21 = flow through seal 2
*       f23 = flow through seal 3               f43 = flow through seal 4
*       f54 = flow through seal 5               fv1 = flow through vent 1
*       fv2 = flow through vent 2               fv3 = flow through vent 3
*       fhe = helium supply flow.
*
*       Miscellaneous variables used as place holders,etc.
*       fdiff1 = difference between flows f01 and f21.
*       fdiff3 = difference between flows f43 and f23.
*       prho1  = related to pressure times density in cavity 1.
*       prho3  = related to pressure times density in cavity 3.
```

```
*****************************************************************************************************
*********************************************** Quantity Spaces ***********************************************
*****************************************************************************************************
        c1      =       { c1nom, c1h, c1vh }
        c2      =       { c2nom, c2h, c2vh }
        c3      =       { c3nom, c3h, c3vh }
        c4      =       { c4nom, c4h, c4vh }
        c5      =       { c5nom, c5h, c5vh }
        p0      =       { p0nom }
        p1      =       { p1l2, p1l1, p1nom, p1h1, p1h2, p1h3 }
        p2      =       { p2l2,  p2l1, p2nom }
        p3      =       { p3l2, p3l1, p3nom, p3h1, p3h2, p3h3, p3h4 }
        p4      =       { p4l2, p4l1, p4nom, p4h1,  p4h2 }
        p5      =       { p5nom }
        t1      =       { t1l1, t1nom, t1h1 }
        t3      =       { t3l1, t3nom, t3h1 }
        f01     =       { f01nom, f01h1, f01h2 }
        fv1     =       { fv1l2, fv1l1, fv1nom, fv1h1, fv1h2, fv1h3, fv1h4 }
        f21     =       { f21l2, f21l1, f21nom, f21h1, f21h2 }
        fhe     =       { fhenom }
        f23     =       { f23l2, f23l1, f23nom, f23h1, f23h2 }
        fv2     =       { fv2l2, fv2l1, fv2nom, fv2h1, fv2h2, fv2h3, fv2h4 }
        f43     =       { f43nom, f43h1, f43h2, f43h3 }
        fv3     =       { fv3l2, fv3l1, fv3nom, fv3h1, fv3h2 }
        f54     =       { f54nom, f54h1, f54h2 }
        cv1     =       { cv1nom }
        cv2     =       { cv2nom }
        cv3     =       { cv3nom }
        che     =       { chenom }
        fdiff1  ==      { fd1l2, fd1l1, fd1nom, fd1h1, fd1h2, fd1h3, fd1h4 }
        fdiff3  ==      { fd3l2, fd3l1, fd3nom, fd3h1, fd3h2, fd3h3, fd3h4, fd3h5 }
        prho1   =       { pr1l2, pr1l1, pr1nom, pr1h1, pr1h2, pr1h3, pr1h4 }
        prho3   =       { pr3l2, pr3l1, pr3nom, pr3h1, pr3h2, pr3h3, pr3h4 }

*****************************************************************************************************
****************************** Model Constraints w/ Corresponding Values ******************************
*****************************************************************************************************
;
; SEAL 1 - Annular Seal between discharge from LOX slinger (Cavity 0) and Cavity 1.
;
;       c1 * p0 = f01
        ((mult c1 p0 f01)
                (c1nom,p0nom,f01nom)   (c1h ,p0nom ,f01h1 )      (c1vh ,p0nom,f01h2 ))

; CAVITY 1
;
;       f21 + fdiff1 = f01 (also written f01 - f21 = fdiff1)
        ((add f21 fdiff1 f01)
                (f21nom,fd1nom,f01nom) (f21nom,fd1h3 ,f01h1 )    (f21nom,fd1h4 ,f01h2 )    (f21h1 ,fd1l1 ,f01nom)
                (f21h2 ,fd1l2 ,f01nom)     (f21l1 ,fd1h1 ,f01nom)    (f21l2 ,fd1h2 ,f01nom))
```

```
; CAVITY 1 constraints (continued)
;       p1 * fdiff1 = prho1  (rho is related to temp, which is related to the flow difference; prho = press. * density)
        ((mult p1 fdiff1 prho1)
                (p1nom,fd1nom,pr1nom)  (p1h2 ,fd1h3 ,pr1h3)  (p1h3 ,fd1h4 ,pr1h4 )  (p1h1 ,fd1l1 ,pr1h1)
                (p1h2 ,fd1l2 ,pr1h2 )  (p1l1 ,fd1h1 ,pr1l1)  (p1l2 ,fd1h2 ,pr1l2 ))

;       f01 + f21 = fv1
        ((add f01 f21 fv1)
                (f01nom,f21nom,fv1nom) (f01h1 ,f21nom,fv1h3 )  (f01h2 ,f21nom,fv1h4 )  (f01nom,f21h1 ,fv1h1 )
                (f01nom,f21h2 ,fv1h2 )  (f01nom,f21l1 ,fv1l1 )  (f01nom,f21l2 ,fv1l2 ))

;       t1 ~ (1/fdiff1)
        ((invprop t1 fdiff1)
                (t1nom,fd1nom)         (t1l1 ,fd1h4 )          (t1h1 ,fd1l2 ))

; DRAIN VENT 1 - Vents GOX and Helium from Cavity 1 overboard.
;
;       prho1 * cv1 = fv1          (p1 * rho1 * cv1 = fv1)
        ((mult prho1 cv1 fv1)
                (pr1nom,cv1nom,fv1nom) (pr1l2 ,cv1nom,fv1l2 )  (pr1l1 ,cv1nom,fv1l1 )  (pr1h1 ,cv1nom,fv1h1 )
                (pr1h2 ,cv1nom,fv1h2 )  (pr1h3 ,cv1nom,fv1h3 )  (pr1h4 ,cv1nom,fv1h4 ))

; SEAL 2 - Annular purge seal between Helium Supply cavity (Cavity 2) and Cavity 1.
;
;       c2 * p2 = f21
        ((mult c2 p2 f21)
                (c2nom,p2nom,f21nom)  (c2h  ,p2l1 ,f21h1 )  (c2vh ,p2l2 ,f21h2 )  (c2nom,p2l1 ,f21l1 )
                (c2nom,p2l2 ,f21l2 ))

; CAVITY 2 (Helium Supply Cavity)
;
;       f21 + f23 = fhe
        ((add f21 f23 fhe)
                (f21nom,f23nom,fhenom) (f21h1 ,f23l1 ,fhenom)  (f21h2 ,f23l2 ,fhenom)  (f21l1 ,f23h1 ,fhenom)
                (f21l2 ,f23h2 ,fhenom))

; HELIUM SUPPLY LINE - Lines from fixed pressure Helium Supply tank.
;
;       fhe ~ che                  (helium supply press is constant)
        ((prop fhe che)
                (fhenom,chenom))

; SEAL 3 - Annular purge seal between Helium Supply cavity (Cavity 2) and Cavity 3.
;
;       c3 * p2 = f23
        ((mult c3 p2 f23)
                (c3nom,p2nom,f23nom)  (c3nom,p2l1 ,f23l1 )  (c3nom,p2l2 ,f23l2 )  (c3h  ,p2l1 ,f23h1 )
                (c3vh ,p2l2 ,f23h2 ))
```

```
; CAVITY 3
;
;       f23 + fdiff3 = f43 (also written f43 - f23 = fdiff3)
        (add f23 fdiff3 f43)
                (f23nom,fd3nom,f43nom) (f23l1 ,fd3h1 ,f43nom)    (f23l2 ,fd3h2 ,f43nom)    (f23h1 ,fd3l1 ,f43nom)
                (f23h2 ,fd3l2 ,f43nom)  (f23nom,fd3h3 ,f43h1 )   (f23nom,fd3h4 ,f43h2 )    (f23nom,fd3h5 ,f43h3 ))

;       t3 ~ fdiff3
        ((prop t3 fdiff3)
                (t3nom,fd3nom)          (t3l1 ,fd3l2 )           (t3h1 ,fd3h5 ))

;       prho3 * fdiff3 = p3   (also written p3 * (1/fdiff3) = prho3, rho3 related to t3 which is inversely proportional to fdiff3)
        ((mult prho3 fdiff3 p3)
                (pr3nom,fd3nom,p3nom)  (pr3h4 ,fd3h5 ,p3h4 )     (pr3h2 ,fd3h3 ,p3h2 )     (pr3h3 ,fd3h4 ,p3h3 )
                (pr3h1 ,fd3l1 ,p3h1 )  (pr3l1 ,fd3h1 ,p3l1 )     (pr3l2 ,fd3h2 ,p3l2 ))

;       f23 + f43 = fv2
        ((add f43 f23 fv2)
                (f43nom,f23nom,fv2nom) (f43nom,f23l1 ,fv2l1 )    (f43nom,f23l2 ,fv2l2 )    (f43nom,f23h1 ,fv2h1 )
                (f43nom,f23h2 ,fv2h2 )  (f43h1 ,f23nom,fv2h2 )   (f43h2 ,f23nom,fv2h3 )    (f43h3 ,f23nom,fv2h4 ))

; VENT LINE 2 - Vents hot fuel-rich gas and Helium from Cavity 3 overboard.
;
;       cv2 * prho3 = fv2          (cv2 * p3 * rho3 = fv2)
        ((mult cv2 prho3 fv2)
                (cv2nom,pr3nom,fv2nom) (cv2nom,pr3l2 ,fv2l2 )    (cv2nom,pr3l1 ,fv2l1 )    (cv2nom,pr3h1 ,fv2h1 )
                (cv2nom,pr3h2 ,fv2h2 )  (cv2nom,pr3h3 ,fv2h3 )   (cv2nom,pr3h4 ,fv2h4 ))

; SEAL 4 - Annular seal between Cavity 4 and Cavity 3.
;
;       c4 * p4 = f43
        ((mult c4 p4 f43)
                (c4nom,p4nom,f43nom)   (c4h  ,p4l1 ,f43h1 )      (c4vh ,p4l2 ,f43h2 )      (c4nom,p4h1 ,f43h1 )
                (c4nom,p4h2 ,f43h3 ))

; CAVITY 4
;
;       fv3 + f43 = f54
        ((add fv3 f43 f54)
                (fv3nom,f43nom,f54nom) (fv3h1 ,f43h1 ,f54h1 )    (fv3h2 ,f43h3 ,f54h2 )    (fv3l1 ,f43h1 ,f54nom)
                (fv3l2 ,f43h2 ,f54nom))

; VENT LINE 3 - Vents hot fuel-rich gas from Cavity 4.
;
;       cv3 * p4 = fv3
        ((mult cv3 p4 fv3)
                (cv3nom,p4nom,fv3nom)  (cv3nom,p4l1 ,fv3l1 )     (cv3nom,p4l2 ,fv3l2 )     (cv3nom,p4h1 ,fv3h1 )
                (cv3nom,p4h2 ,fv3h2 ))
```

```
; SEAL 5 - Annular seal between Cavity 5 (leakage from HPOTP turbine)
;        and Cavity 4.
;
;         c5 * p5 = f54
          ((mult c5 p5 f54)
                  (c5nom,p5nom,f54nom)   (c5h ,p5nom ,f54h1 )       (c5vh ,p5nom,f54h2 ))
```

REPORT DOCUMENTATION PAGE

Form Approved

Public reporting burden for this collection of information is estimated to average 1 hour per response, including the time for reviewing instructions, searching existing data sources, gathering and maintaining the data needed, and completing and reviewing the collection of information. Send comments regarding this burden estimate or any other aspect of this collection of information, including suggestions for reducing this burden, to Washington Headquarters Services, Directorate for Information Operations and Reports, 1215 Jefferson Davis Highway, Suite 1204, Arlington, VA 22202-4302, and to the Office of Management and Budget, Paperwork Reduction Project (0704-0188), Washington, DC 20503.

1. AGENCY USE ONLY (*Leave blank*)

2. REPORT DATE
July 1992

3. REPORT TYPE AND DATES COVERED
Technical Memorandum

4. TITLE AND SUBTITLE
Rocket Engine Diagnostics Using Qualitative Modeling Techniques

5. FUNDING NUMBERS
WU–593–12–21

6. AUTHOR(S)
Michael Binder, William Maul, Claudia Meyer, and Amy Sovie

7. PERFORMING ORGANIZATION NAME(S) AND ADDRESS(ES)
National Aeronautics and Space Administration
Lewis Research Center
Cleveland, Ohio 44135–3191

8. PERFORMING ORGANIZATION
E–7108

9. SPONSORING/MONITORING AGENCY NAME(S) AND ADDRESS(ES)
National Aeronautics and Space Administration
Washington, DC 20546–0001

10. SPONSORING/MONITORING
NASA TM–105714
AIAA–92–3164

11. SUPPLEMENTARY NOTES
Prepared for the 28th Joint Propulsion Conference cosponsored by the AIAA, SAE, ASME, and ASEE, Nashville, Tennessee, July 6–8, 1992. Michael Binder, William Maul, and Claudia Meyer, Sverdrup Technology, Inc., Lewis Research Center Group, 2001 Aerospace Parkway, Brook Park, Ohio 44142 (work funded by NASA Contract NAS3–25266). Amy Sovie, NASA Lewis Research Center. Responsible person, Michael Binder, (216) 977–7524.

12a. DISTRIBUTION/AVAILABILITY STATEMENT
Unclassified - Unlimited
Subject Categories 20 and 63

This publication is available from the NASA Center for AeroSpace Information, (301) 621–0390.

12b. DISTRIBUTION CODE

13. ABSTRACT ***(Maximum 200 words)***

Researchers at the NASA Lewis Research Center are presently developing qualitative modeling techniques for automated rocket engine diagnostics. A qualitative model of a turbopump interpropellant seal system has been created. The qualitative model describes the effects of seal failures on the system steady-state behavior. This model is able to diagnose the failure of particular seals in the system based on anomalous temperature and pressure values. The anomalous values input to the qualitative model are generated using numerical simulations. Diagnostic test cases include both single and multiple seal failures.

14. SUBJECT TERMS
Diagnostic; Qualitative model; Health monitoring

15. NUMBER OF PAGES
14

16. PRICE CODE
A03

17. SECURITY CLASSIFICATION	18. SECURITY CLASSIFICATION	19. SECURITY CLASSIFICATION	20. LIMITATION OF ABSTRACT
Unclassified	Unclassified	Unclassified	