NASA Technical Memorandum 105141

Eccentricity Effects on Leakage of a Brush Seal at Low Speeds

Julie A. Schlumberger, Margaret P. Proctor, and Robert C. Hendricks
Lewis Research Center
Cleveland, Ohio

Prepared for the
1991 Winter Annual Meeting of the American Society of
Mechanical Engineers
Atlanta, Georgia, December 1-6, 1991

NASA

ECCENTRICITY EFFECTS ON LEAKAGE OF A BRUSH SEAL AT LOW SPEEDS

Julie A. Schlumberger, Margaret P. Proctor, and Robert C. Hendricks
National Aeronautics and Space Administration
Lewis Research Center
Cleveland, Ohio 44135

ABSTRACT

The effects of eccentricity on brush seal leakage at low rotational speeds were investigated. This report includes the leakage results for ambient temperature air and nearly saturated steam at three different rotor eccentricities at both 0 and 400 rpm. A brush seal with a nominal bore diameter of 13.647 cm (5.3730 in.) was used. It had a radial concentric interference of 0.071 cm (0.0028 in.) and a fence height of 0.0927 cm (0.0365 in.). There were 1060 bristles per centimeter of circumference (2690 bristles per inch of circumference). Rotor eccentricities of 0.003, 0.010, 0.038, and 0.043 cm (0.001, 0.004, 0.015, and 0.017 in.) were achieved by using bushings with different offsets.

The results were compared with an annular seal model (FLOWCAL) for air and to a standard labyrinth seal model for steam. The annular seal model was also compared with a bulk flow model of a concentric brush seal in air. Large eccentricities did not damage the brush seals or their Haynes 25 bristles. However, the 304 stainless steel rotor did show wear, indicating a harder surface is needed. Only the steam data showed hysteresis and were affected by shaft rotation. The brush seal had lower leakage rates than those predicted for comparable annular and labyrinth seals (conventional) because of the large clearances these seals require to accommodate large shaft excursions.

INTRODUCTION

A typical brush seal consists of two washers with a bristle pack sandwiched between them as shown in Fig. 1, which also shows a photograph of the magnified bristle tips. The bristle pack and washers are welded together at the outside diameter and machine finished. The back washer, which is on the low-pressure side of the seal, supports the bristle pack in the axial direction. The inner diameter of the back washer must be large enough to accommodate shaft excursions. The inner diameter of the bristle pack is smaller than that of the back washer and usually is sized for a 0.01 to 0.025 cm (0.005 to 0.010 in.) interference with the rotor. The bristles are small in diameter, typically

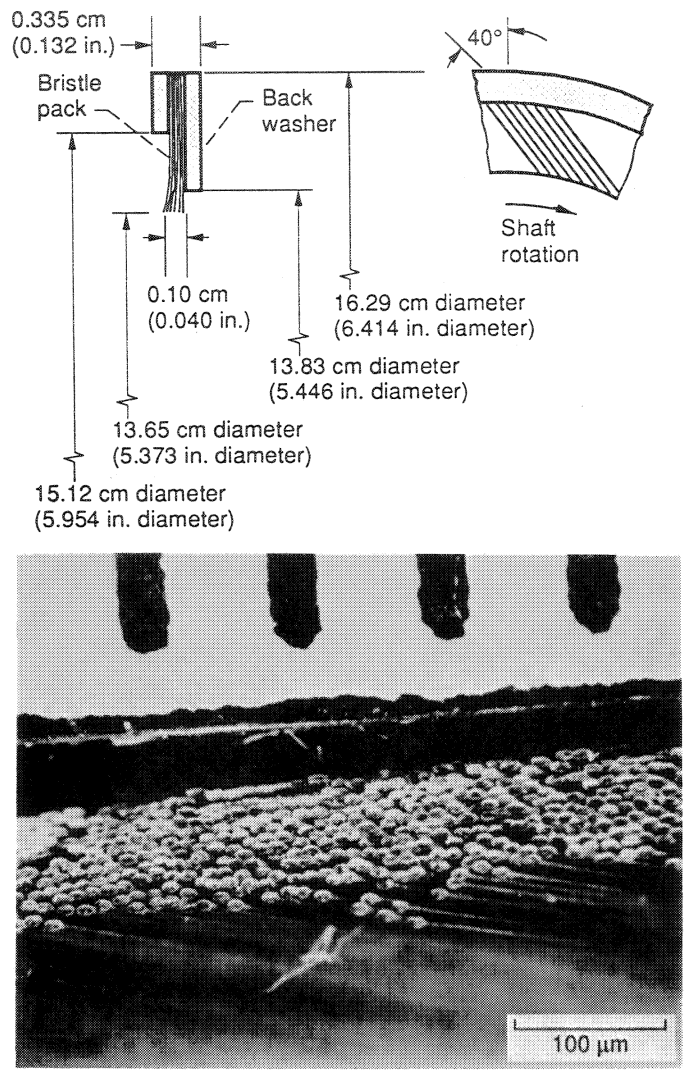

Figure 1.—Brush seal geometry and photograph of magnified brush seal tips. Bristle diameter: 0.0076 cm (0.0030 in.).

0.008 cm (0.003 in.), and are angled 30° to 60° from the radial direction. This allows the bristles to deflect like cantilevered beams when loaded by shaft excursions. The front washer, on the high-pressure side of the seal, holds the bristles in place and has an inner diameter greater than that of the back washer.

Because of their compliant nature, brush seals are currently being considered as replacements for seals in applications such as gas turbine engines, turbopumps, gas compressors, and steam generators. Since the bristles have an initial interference with the rotor and can adapt to shaft excursions as large as the radial concentric clearance between the rotor and the back washer, leakage can be reduced from that of conventional seals. Conventional seals, such as annular and labyrinth seals, are designed with a clearance larger than they need in their normal operation to account for irregular shaft perturbations. If the clearance is too small, the shaft excursions will wear the seal, increasing leakage. By increasing the axial sealing length or number of labyrinth teeth, one can reduce leakage for these larger clearances; however, space is sacrificed, making larger and heavier equipment necessary.

Previous work demonstrates that brush seals reduce leakage to one-third to one-fourth that of four- and five-cavity labyrinth seals (Flower, 1990, and Gorelov et al., 1988). Others have found the leakage to be 1/10 to 1/20 that of labyrinth seals running in the same turbomachine with clearances of 0.75 mm (Ferguson, 1988). Testing has also shown that brush seals generate little heat - considerably less than finned labyrinth seals (Ferguson, 1988). Estimates of frictional losses between the brush and rotor are negligible. In addition, brush seals are more stable than labyrinth seals (Conner and Childs, 1990).

Although brush seals are known to be compliant, little or no information exists in the open literature about the effects of eccentricities on brush seal performance. In addition, brush seals need to be characterized with steam as the working fluid, since they may be used to enhance stability in the space shuttle main engine (SSME) high-pressure oxygen turbopump (HPOTP) turbine (where hydrogen-rich steam is the working fluid) (Hendricks et al., 1990). In addition, the power-generation industry could benefit from a low-leakage, compliant seal for steam generators. Although the work presented here does not reach the operating conditions required for an SSME turbine (1200 °F), it does present some preliminary steam data near saturated conditions with a maximum temperature of 416 K (290 °F).

Following a description of the apparatus, test procedure, and analytical models, preliminary data for ambient temperature air (nominally 60 °F) and nearly saturated steam are presented for shaft speeds of 0 and 400 rpm. Air data are given for eccentricities of 0.003, 0.010, and 0.038 cm (0.001, 0.004, and 0.015 in.) and are compared with an annular seal model, FLOWCAL. Steam data are given for eccentricities of 0.003, 0.010, and 0.043 cm (0.001, 0.004, and 0.017 in.) and are compared with a standard labyrinth seal model. Also, a brush seal bulk flow model is compared with an annular seal model in air, and qualitative wear results are presented.

APPARATUS AND TEST PROCEDURE

Brush Seal Assembly

The apparatus (Fig. 2) consisted of a two-piece pressure vessel, the brush seal, and a rotating assembly. The bottom of the stainless steel pressure vessel was flanged for mounting to a baseplate. This baseplate was clamped to a drill press used to drive the shaft.

Pressure Vessel. The brush seal was seated in a rim on the pressure vessel top and sandwiched between the top and bottom portions of the pressure vessel. The pressure vessel was held together by six bolts that sealed off secondary leakages. A flat-bottomed hole centered inside the bottom of the pressure vessel and a thru hole in the top of the pressure vessel acted as bearings for the rotating assembly. These allowed for only a 0.003-cm (0.001-in.) radial run out in the shaft.

Brush Seal. The geometry of the brush seal is given in Table I and is shown in Fig. 1 along with a photograph of the magnified inner diameter of the bristle pack. The brush seal was 0.335 cm (0.132 in.) thick, with an outside diameter of 16.29 cm (6.414 in.) and an inner diameter of 13.65 cm (5.373 in.). The inside diameters of the front and back washer were 15.12 and 13.83 cm (5.954 and 5.446 in.), respectively. The fence height, defined as the radial free length of the extension of the bristles beyond the back washer, was 0.0927 cm (0.0365 in.). These Haynes 25 bristles were 0.0076 cm (0.0030 in.) in diameter, angled 40° from the radial direction, and had a packing density of 1060 bristles/cm of circumference (2690 bristles/in. of circumference).

Rotating Assembly. The rotating assembly, driven by a drill press, consisted of a tie bolt, an eccentric bushing, a rotor, a lock nut, and several washers. The outside diameter of the 304 stainless steel rotor was 13.662 cm (5.3786 in.), creating a 0.0071-cm (0.0028-in.) concentric radial interference. Several different eccentric bushings were used to create eccentricities of 0.003, 0.010, 0.038, and 0.043 cm (0.001, 0.004, 0.015, and 0.017 in.).

Instrumentation

The instrumentation, shown in Fig. 3, consisted of venturi meters, type E (Cu/Ni) thermocouples, and strain-gage pressure transducers. One of three parallel venturi meters measured the inlet supply flow rate, and temperature and pressure were measured near the inlet of the pressure vessel. The pressure at the exit of the seal was taken to be at barometric pressure,

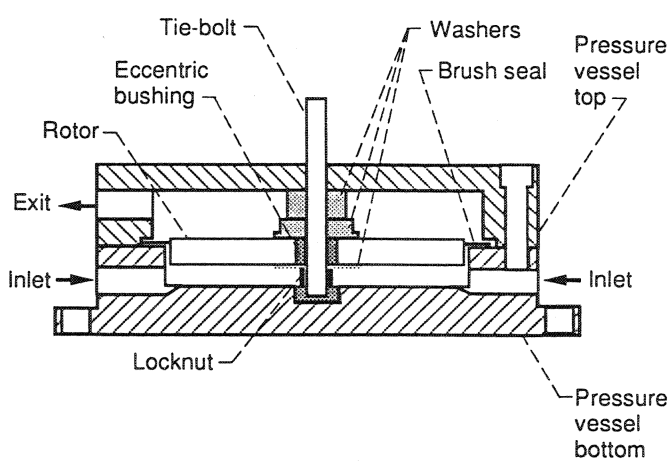

Figure 2.—Brush seal test section for eccentric testing.

TABLE I. - BRUSH SEAL GEOMETRY

Brush seal outside diameter, cm (in.)	16.29 (6.414)
Brush seal inside diameter, cm (in.)	13.65 (5.373)
Front washer inside diameter, cm (in.)	15.12 (5.954)
Back washer inside diameter, cm (in.)	13.83 (5.446)
Brush seal axial thickness, cm (in.)	0.355 (0.132)
Front washer axial thickness, cm (in.)	0.12 (0.046)
Back washer axial thickness, cm (in.)	0.12 (0.046)
Bristle pack axial thickness, cm (in.)	0.10 (0.040)
Bristle diameter, cm (in.)	0.0076 (0.0030)
Number of bristles/cm-circ (/in.-circ)	1060 (2690)
Angle of bristles, deg	40
Rotor diameter, cm (in.)	13.662 (5.378)
Bristle material	Haynes 25
Rotor material	304 stainless steel

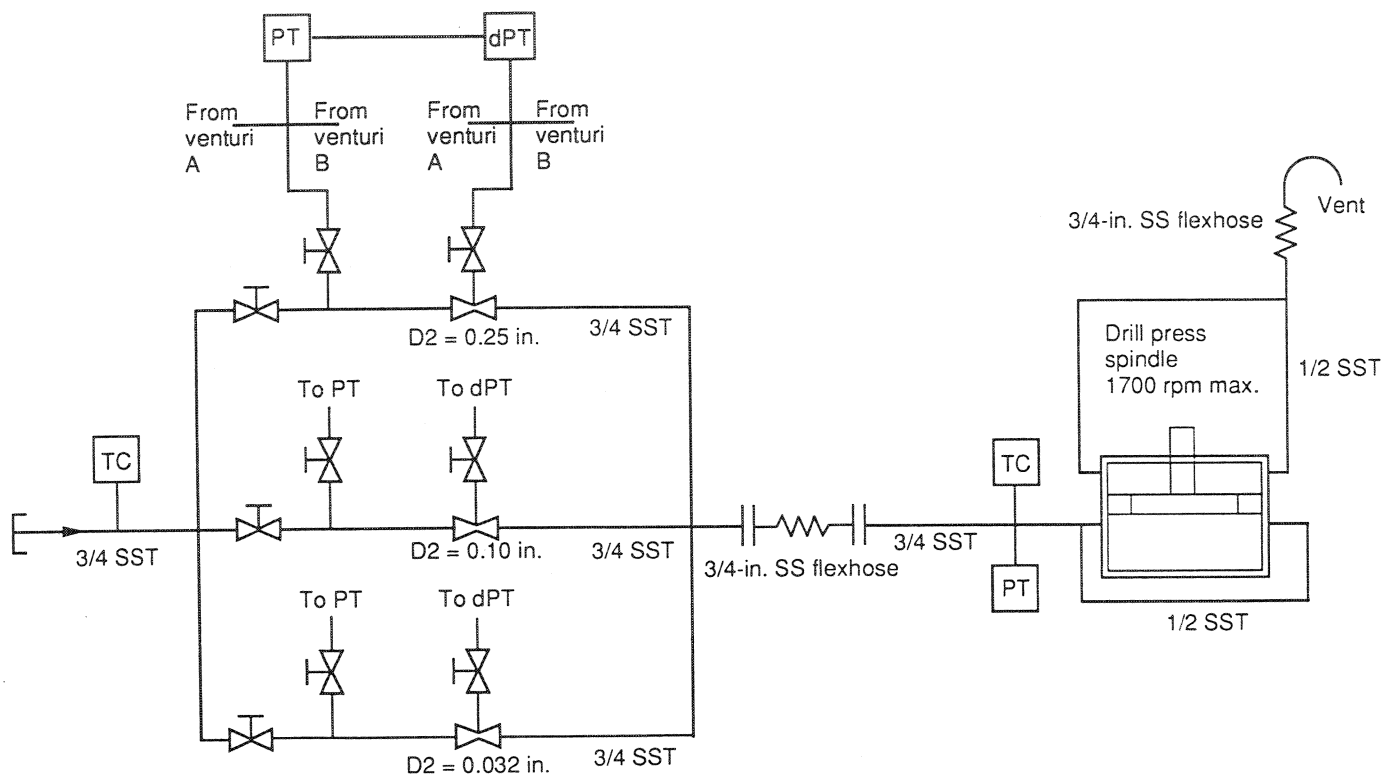

Figure 3.—System flow schematic and instrumentation.

TABLE II. - TEST CONDITIONS

Test condition	Air	Steam
Pressure, kPa (psi)	0 to 827 (120)	0 to 300 (43)
Temperature, K (deg F)	290 (60)	slightly > saturation
Eccentricity, cm (in.)		
0.003 (0.001)	●	●
0.010 (0.004)	●	●
0.038 (0.015)	●	
0.043 (0 017)		●
Speed, rpm	0 and 400	0 and 400

since the calculated maximum pressure drop through the flex line was a negligible 0.024 MPa (3.5 psid) for air and 0.07 kPa (0.01 psid) for steam.

Data Acquisition

A single-user, steady-state data acquisition system was used to record and monitor the data, which were displayed on a monitor and updated every second. When steady-state conditions were achieved, a data point was recorded.

Test Procedure

Before each run, the transducers were calibrated, and the system was purged with air. Then, as shown in Fig. 3, a hand valve was opened allowing the test fluid to enter the bottom half of the pressure vessel through two inlet supply ports located 180° apart. The test fluid exited the pressure vessel by two ports located in the top half of the pressure vessel, 180° apart and clocked 45° from the inlets. The exhausted test fluids were carried from the exit ports to the outside through a 3-m (10-ft) long flex hose with an inner diameter of 1.9 cm (0.75-in.).

Data were taken as the pressure was increased and then decreased to determine hysteresis effects in the brush seal geometry. This procedure was repeated for both ambient temperature air and nearly saturated steam at shaft speeds of 0 and 400 rpm. The test conditions are shown in Table II.

ANALYSIS

Annular Seal Model

An analysis was performed to compare brush seal leakages to annular and labyrinth seal leakages. The computer code FLOWCAL was used to model an isothermal annular seal in air. This annular seal model has the same axial length as the bristle pack, but with radial clearances 0.0013 cm (0.00050 in.) greater than the operating eccentricities to ensure that the shaft will not rub the seal. FLOWCAL calculates either isothermal or adiabatic gas flow rates through an axial pressure gradient. Eccentricity and inlet inertial effects are accounted for. The seal is divided into two regions: an inlet region where the flow is strictly inertial and a film region where viscous forces dominate. Details can be found in Proctor (1988).

Labyrinth Seal Model for Steam

Brush-seal steam leakage rates were compared with the leakage rates predicted with the following standard equation for steam labyrinth seals (Baumeister, 1978):

$$w = 25KA\sqrt{\frac{(P_1/V_1)\left[1 - (P_2/P_1)^2\right]}{N - \ln(P_2/P_1)}}$$

where

- w mass flow rate of steam, lb_m/h
- K experimentally determined coefficient
- A area through packing clearance space, $in.^2$
- P_1 inlet pressure, psia
- V_1 inlet specific volume of steam, ft^3/lb_m
- P_2 exit pressure, psia
- N number of throttlings

For the analysis, the labyrinth seal was assumed to have only one throttling and a radial clearance of 0.0038 cm. (0.0015 in.). Although the value of K normally ranges from 50 to 120, to be conservative we set K to 50. We also assumed that the steam entering the seal was saturated vapor. Note that this equation does not account for eccentricity effects.

Bulk Flow Model

A bulk flow model described in Braun et al. (1990) and Hendricks et al. (1991a) was used to predict the leakage of the test brush seal during concentric operation in air. The bulk flow model accounts for three flow regions. These flow regions are at the interface of the seal and rotor, through the bristle pack, and parallel to the bristles along the back washer. The flow through the bristle pack is based on flow through packed fibers or porous media. Deformation of the bristles due to aerodynamic load and axial pressure gradients is accounted for; however, interbristle friction is not. A previous comparison of the bulk flow model leakage predictions to concentric test data in air showed good agreement (Hendricks et al., 1991b). FLOWCAL was used to determine the clearance an annular seal must have to obtain the same performance as a brush seal.

RESULTS AND DISCUSSION

The objectives of this investigation were (1) to determine the effect of eccentricities on brush seal leakage in air and steam and (2) to determine how brush seal performance compares with that of annular and labyrinth seals.

Representative brush seal performance data in ambient temperature air for eccentricities of 0.003, 0.010, and 0.038 cm (0.001, 0.004, and 0.015 in.) are shown in Fig. 4, parts (a), (b), and (c), respectively. Pressure drop is plotted as a function of volumetric flow rate for shaft speeds of 0 and 400 rpm. Open symbols indicate data was taken while pressure was increased and solid symbols while pressure was decreased. As expected, the flow rate increased with increased pressure drop across the seal and with increased eccentricity. Eccentricity effects were significant. A comparison of the slopes of the data shows that the leakage rate was approximately 3.5 and 4.5 times greater than the 0.003 cm (0.001 in.) eccentricity data for eccentricities of 0.010 and 0.038 cm (0.004 and 0.015 in.), respectively. It is important to note that for eccentricities of 0.010 and 0.038 cm (0.004 and 0.015 in.) a gap opened between the bristles and rotor since the concentric radial interference was only 0.0071 cm (0.0028 in.). As shown by the rotating and nonrotating eccentric air data, the effectiveness of the seal did not improve with rotation as in the concentric cases given in Hendricks et al. (1991b). Also, very little hysteresis is seen in the air data.

Figure 4 also gives the FLOWCAL predicted pressure drop as a function of volumetric flow rate for an annular seal in air. The annular seal was modeled such that the radial clearance was 0.0013 cm (0.00050 in.) larger than the eccentricity. This allowed the seal leakage to be minimized while the seal remained noncontacting. In addition, the axial length was the same as the bristle pack thickness, 0.10 cm (0.040 in.). At an eccentricity of 0.003 cm (0.001 in.), the annular and brush seals gave similar results. However, at the larger eccentricities of 0.010 and 0.038 cm (0.004 and 0.015 in.) the brush seal reduced leakage to approximately half that of the annular seal. This is due to the large clearance required for the annular seal to accommodate larger eccentricities.

Figure 5 shows brush seal performance data in nearly saturated steam for eccentricities of 0.003, 0.010, and 0.043 cm (0.001, 0.004, and 0.017 in.), respectively. The pressure drop across the seal is plotted as a function of mass flow rate. Again, as expected, the flow rate increased with pressure drop across the seal and with increased eccentricity. The mass flow rates for 0.010 and 0.043 cm (0.004 and 0.017 in.) eccentricities, respectively, were approximately 2.2 and 4.3 times greater than the mass flow rates for 0.003 cm (0.001 in.) eccentricity data. In both the 0.003 and 0.010 cm (0.001 and 0.004 in.) eccentricity data, the mass flow rate during shaft rotation increased by a factor of two over the nonrotating data. This effect is not apparent in the 0.043 cm (0.0017 in.) eccentricity steam data, nor was it observed in the air data. Further testing is required to determine the cause. In addition, hysteresis effects were more pronounced in the steam data than in the air data. The mass flow rate was greater when pressure drop across the seal was being increased rather than decreased.

Since it is not appropriate to use FLOWCAL for steam, a standard labyrinth seal equation for steam was used for the comparison to the brush seal steam data. Also, since the standard labyrinth seal equation does not account for eccentricity, a comparison was made only for the 0.003 cm (0.001 in.) eccentricity data, which is closest to being concentric. The labyrinth seal was modeled as a concentric, single-tooth seal with an axial length equal to the thickness of the bristle pack of the brush seal, 0.10 cm (0.040 in.). The radial clearance was 0.0038 cm (0.0015 in.). The results of this model are shown in Fig. 5(a) in comparison with the 0.003 cm (0.001 in.) eccentricity data. The measured brush seal leakage was similar to that predicted for the labyrinth seal.

Figure 6 compares the FLOWCAL annular seal model and the bulk flow brush seal model. The bulk flow model of the brush seal predicted performance for concentric operation. FLOWCAL was used to model an annular seal of the same axial length as the thickness of the bristle pack for concentric operation as well. However, instead of selecting a clearance that was 0.0013 cm (0.00050 in.) greater than the eccentricity, as done previously, the clearance used in FLOWCAL was varied until the annular seal performance matched that predicted for the brush seal by the bulk flow model.

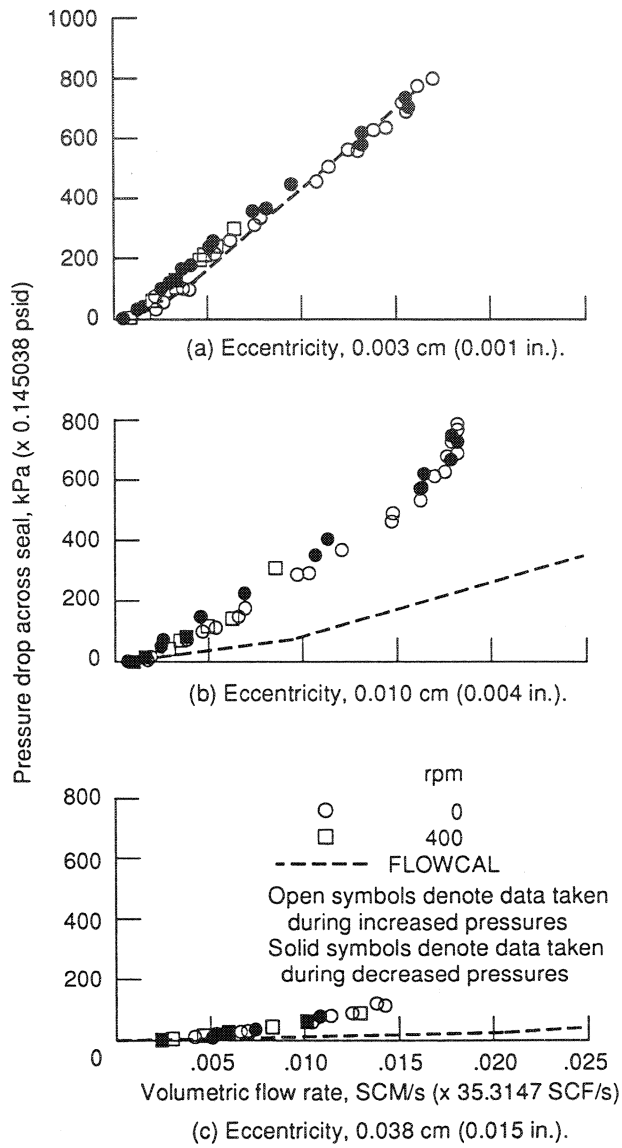

Figure 4.—Measured brush seal leakage performance data in 290 K (60 °F) air at 0 and 400 rpm compared with predicted performance of an annular seal. The annular seal model had the same axial length as the bristle pack thickness, 0.10 cm (0.040 in.), and a radial clearance 0.0013 cm (0.00050 in.) greater than the eccentricity. This model did not account for rotational speed.

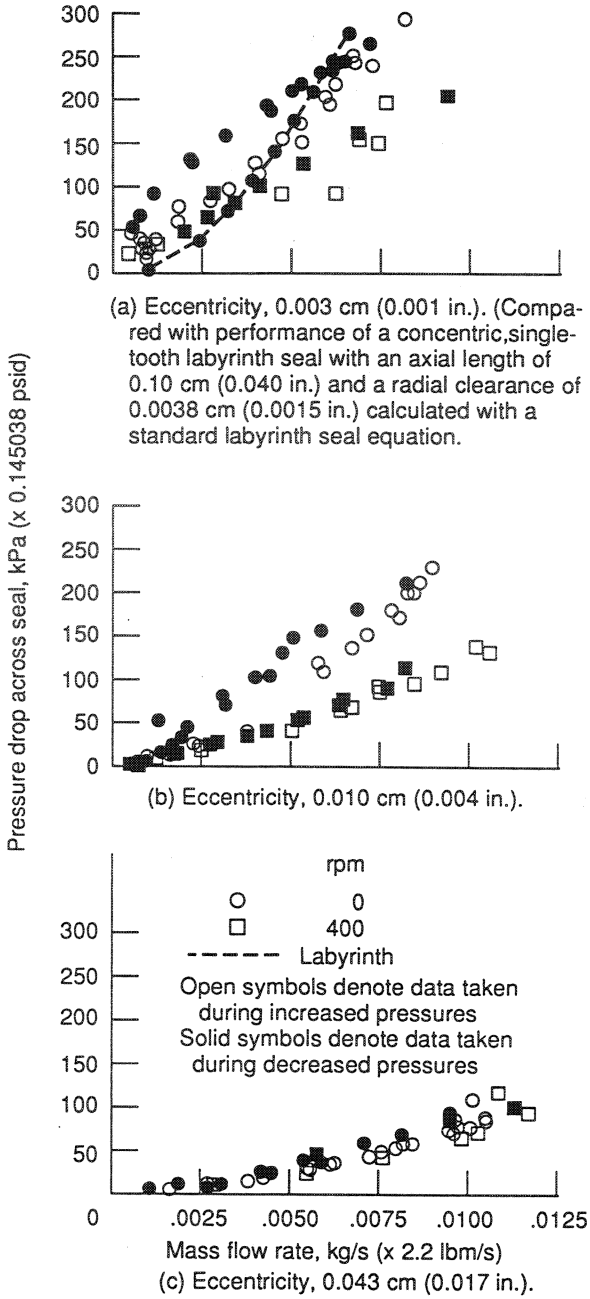

(a) Eccentricity, 0.003 cm (0.001 in.). (Compared with performance of a concentric,single-tooth labyrinth seal with an axial length of 0.10 cm (0.040 in.) and a radial clearance of 0.0038 cm (0.0015 in.) calculated with a standard labyrinth seal equation.

(b) Eccentricity, 0.010 cm (0.004 in.).

(c) Eccentricity, 0.043 cm (0.017 in.).

Figure 5.—Measured brush seal leakage performance data in nearly saturated steam at 0 and 400 rpm.

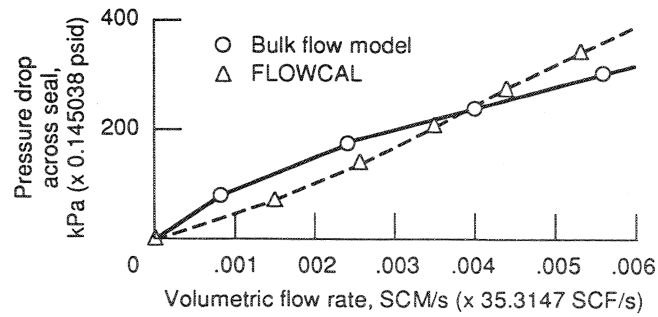

Figure 6.—Bulk flow model prediction of concentric brush seal leakage performance in air compared with FLOWCAL-predicted leakage performance of an annular seal with a radial clearance of 0.003 cm (0.001 in.).

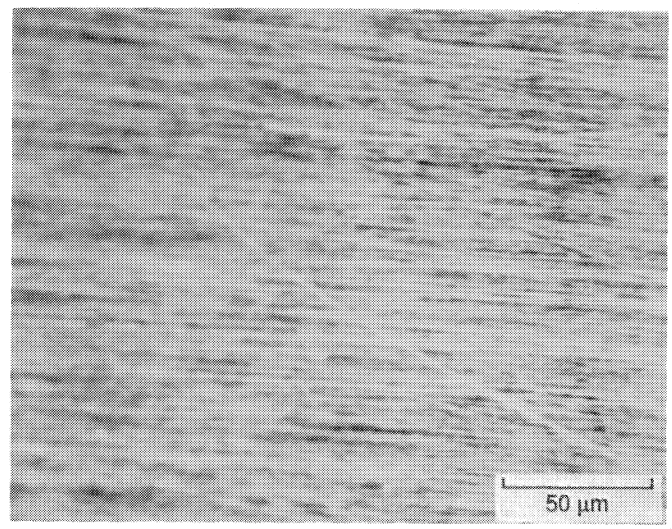

(a) Before testing.

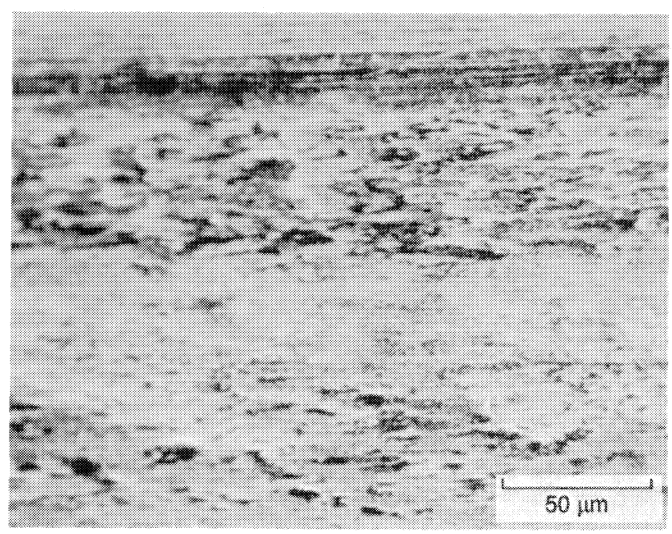

(b) After testing.

Figure 7.—Photographs of magnified rotor surface before and after testing.

As shown in Fig. 6, an annular seal clearance of 0.003 cm (0.001 in.) is required during concentric operation to achieve performance close to the brush seal. Although these two predictions match well at a pressure drop across the seal of 240 kPa (35 psid), they do not agree as well at low pressure drops because of their opposing curvatures. However, the variation is within the range of hysteresis effects.

The point to note here is that, whereas the annular and brush seals perform equally well during concentric operation, the brush seal can handle large eccentricities without damaging the seal. Post-test examination of the Haynes 25 bristles and seal found no observable wear. However, wear was observed on the 304 stainless steel rotor, indicating that a harder rotor

surface such as ZrO_2 or MgZrO is needed (Hendricks et al., 1991b). Photographs of the magnified rotor surface, before and after testing, are shown in Fig. 7, parts (a) and (b), respectively. In Fig. 7(a), the rotor surface is uniform. In Fig. 7(b), the dark spots show the roughened rotor surface which measured 4.47×10^{-3} cm (176×10^{-6} in.) rms roughness.

Because of their compliant nature, brush seals accommodate eccentric operation with minimal loss of performance. Under highly eccentric operation, annular and labyrinth seals would leak considerably more than brush seals because of the large clearances required for shaft excursions.

SUMMARY OF RESULTS

Eccentricity effects on brush seal leakage were investigated for ambient temperature air and nearly saturated steam at 0 and 400 rpm. A brush seal with a nominal bore diameter of 13.647 cm (5.3730 in.) having an initial interference with the rotor of 0.071 cm (0.0028 in.) was used. The following results were determined:

1. Large eccentricities did not damage the brush seal; however, the rotor surface was worn, indicating that a harder surface is required.
2. The steam data showed a large hysteresis, whereas the air data showed only a small hysteresis.
3. Shaft rotation did not affect brush seal performance in air, but it significantly increased leakage in steam.
4. The brush seal had lower leakage rates than those predicted for comparable annular and labyrinth seals.
5. The annular and labyrinth seals are not predicted to perform as well as brush seals when large shaft excursions are expected because of the large clearances the shaft excursions require.

REFERENCES

Baumeister, T., ed., 1978, Mark's Standard Handbook for Mechanical Engineers, 8th edition, McGraw-Hill, New York, pp. 9-46.

Braun, M.J., Hendricks, R.C., and Canacci, V.A., 1990, "Non-Intrusive Qualitative and Quantitative Flow Characterization and Bulk Flow Model for Brush Seals," Proceedings of Japan International Tribology Conference, Nagoya.

Childs, D., 1990, "Brush Seal Rotordynamic Damping Characteristics," AIAA Paper 90-2139.

Ferguson, J.G., 1988, "Brushes as High Performance Gas Turbine Seals," ASME Paper 88-GT-182.

Flower, R., 1990, "Brush Seal Development System," AIAA Paper 90-2143.

Gorelov, G.M., Reznik, V.E., and Tsibizov, V.I., 1988, "An Experimental Study of the Rate Characteristics of Brush Seals in Comparison with Labyrinth Seals," Aviatsionnaia Tekhnika, No. 4, pp. 43-46 (in Russian).

Hendricks, R.C., Braun, M.J., and Mullen, R.L., 1990, "Brush Seal Configurations for Cryogenic and Hot Gas Applications," Advanced Earth-to-Orbit Propulsion Technology, 1990, R.J. Richmond and S.T. Wu, eds., Vol. 2, NASA CP-3092-VOL-2, 1990, pp. 78-90.

Hendricks, R.C., Schlumberger, J.A., Braun, M.J., Choy, F., and Mullen, R.L., 1991a, "A Bulk Flow Model of a Brush Seal System," ASME Turbo Expo - Land, Sea and Air, 36th ASME Int. Gas Turbine and Aero. Engine Congress and Exposition, Orlando, FL, June 1991.

Hendricks, R.C., Proctor, M.P., Schlumberger, J.A., Braun, M.J., Mullen, R.L., 1991b "Some Preliminary Results of Brush Seal/Rotor Interference Effects on Leakage at Zero and Low RPM Using a Tapered-Plug Rotor," AIAA Paper 91-3390. (Also, NASA TM-104396.)

Proctor, M.P., 1988, "Leakage Predictions for Rayleigh-Step, Helium-Purge Seals," NASA TM-101352.

REPORT DOCUMENTATION PAGE

Form Approved
OMB No. 0704-0188

Public reporting burden for this collection of information is estimated to average 1 hour per response, including the time for reviewing instructions, searching existing data sources, gathering and maintaining the data needed, and completing and reviewing the collection of information. Send comments regarding this burden estimate or any other aspect of this collection of information, including suggestions for reducing this burden, to Washington Headquarters Services, Directorate for Information Operations and Reports, 1215 Jefferson Davis Highway, Suite 1204, Arlington, VA 22202-4302, and to the Office of Management and Budget, Paperwork Reduction Project (0704-0188), Washington, DC 20503.

1. AGENCY USE ONLY (*Leave blank*)

2. REPORT DATE
December 1991

3. REPORT TYPE AND DATES COVERED
Technical Memorandum

4. TITLE AND SUBTITLE
Eccentricity Effects on Leakage of a Brush Seal at Low Speeds

5. FUNDING NUMBERS
WU–506–42–72

6. AUTHOR(S)
Julie A. Schlumberger, Margaret P. Proctor, and Robert C. Hendricks

7. PERFORMING ORGANIZATION NAME(S) AND ADDRESS(ES)
National Aeronautics and Space Administration
Lewis Research Center
Cleveland, Ohio 44135–3191

8. PERFORMING ORGANIZATION REPORT NUMBER
E–6414

9. SPONSORING/MONITORING AGENCY NAME(S) AND ADDRESS(ES)
National Aeronautics and Space Administration
Washington, DC 20546–0001

10. SPONSORING/MONITORING AGENCY REPORT NUMBER
NASA TM–105141

11. SUPPLEMENTARY NOTES
Prepared for the 1991 Winter Annual Meeting of the American Society of Mechanical Engineers, Atlanta, Georgia, December 1–6, 1991. Responsible person, J.A. Schlumberger, 216–433–2463.

12a. DISTRIBUTION/AVAILABILITY STATEMENT
Unclassified - Unlimited
Subject Category: 20
Available electronically at http://gltrs.grc.nasa.gov
This publication is available from the NASA Center for AeroSpace Information, 301–621–0390.

12b. DISTRIBUTION CODE

13. ABSTRACT ***(Maximum 200 words)***
The effects of eccentricity on brush seal leakage at low rotational speeds were investigated. This report includes the leakage results for ambient temperature air and nearly saturated steam at three different rotor eccentricities at both 0 and 400 rpm. A brush seal with a nominal bore diameter of 13.647 cm (5.3730 in.) was used. It had a radial concentric interference of 0.071 cm (0.0028 in.) and a fence height of 0.0927 cm (0.0365 in.). There were 1060 bristles per centimeter of circumference (2690 bristles per inch of circumference). Rotor eccentricities of 0.003, 0.038, 0.038, and 0.043 cm (0.001, 0.004, 0.15, and 0.017 in.) were achieved by using bushings with different offsets. The results were compared with an annular seal model (FLOWCAL) for air and to a standard labyrinth seal model for steam. The annular seal model was also compared with a bulk flow model of a concentric brush seal in air. Large eccentricities did not damage the brush seals or their Haynes 25 bristles. However, the 304 stainless steel rotor did show wear, indicating a harder surface is needed. Only the steam data showed hysteresis and were affected by shaft rotation. The brush seal had lower leakage rates than those predicted for comparable annular and labyrinth seals (conventional) because of the large clearances these seals require to accommodate large shaft excursions.

14. SUBJECT TERMS
Eccentricity; Brushes; Sealing; Air; Steam; Leakage

15. NUMBER OF PAGES
8

16. PRICE CODE
A02

17. SECURITY CLASSIFICATION OF REPORT
Unclassified

18. SECURITY CLASSIFICATION OF THIS PAGE
Unclassified

19. SECURITY CLASSIFICATION OF ABSTRACT
Unclassified

20. LIMITATION OF ABSTRACT