NASA Technical Memorandum 83586

Experimental Study of Bubble Cavities Attached to a Rotating Shaft in a Reservoir

R. C. Hendricks
Lewis Research Center
Cleveland, Ohio

and

M. J. Braun
University of Akron
Akron, Ohio

and

R. L. Mullen
Case Western Reserve University
Cleveland, Ohio

Prepared for the
Cavitation and Multiphase Flow Forum
sponsored by the American Society of Mechanical Engineers
New Orleans, Louisiana, February 11–17, 1984

NASA

E-1975

EXPERIMENTAL STUDY OF BUBBLE CAVITIES ATTACHED TO A ROTATING SHAFT IN A RESERVOIR

R. C. Hendricks
National Aeronautics and Space Administration
Lewis Research Center
Cleveland, Ohio 44135

M. J. Braun
Department of Mechanical Engineering
University of Akron
Akron, Ohio 44325

R. L. Mullen
Department of Civil Engineering
Case Western Reserve University
Cleveland, Ohio 44106

NOMENCLATURE

K	housing scale factor
KR	housing radius
L	seal length
p	pressure
R	shaft radius
r	radius
T	torque
V	velocity
x	void fraction or void region
x,i	local coordinate
Y	parameter; see eq. (20)
Z	parameter; see eq. (12)
Δ	operator, see eqs. (8) to (11)
μ	viscosity
ρ	density
τ	shear
ω	angular velocity

Subscripts:

g	gas
ℓ	liquid
m	limiting rotation boundary
o	pseudo boundary, equivalent to KR
r	radial
ref	reference boundary
θ	angular

INTRODUCTION

Two-phase flow in shaft seals, bearings, pumps, and dampers has been of concern to tribologists for a number of years (1). The void phase can be either vapor or dissolved gases (inerts) and in either case, a bubbly lubricating film can occur that may substantially affect performance.

Several investigators have addressed the favorable effects of bubbly films in steadily loaded seals and bearings (e.g., 2-4). However, under dynamical loading with squeeze effects, there appears to be a substantial reduction in the load capacity of bearings (5,6); the effect in seals is still under investigation. In most instances one trades load capacity (stiffness) for damping.

The entrainment of void (air) into oil is commonplace and significant cavity regions can form in journal bearings (7). It is clear that body force effects due to rotation or cyclic motions along with continuity requirements have a significant effect on void migration and coalescence.

In this study air-entrained oil was discovered to migrate toward and in some instances become attached to the rotating interface. A Bingham fluid was used to model the phenomena.

APPARATUS AND INSTRUMENTATION

The apparatus consists of a 16-mm (5/8-in.) diameter shaft rotating at 1650 rpm, approximately 82.5 mm (3-1/4 in.) from the bottom of a 230- by 230- by 350-mm (9- by 9- by 14-in.) oil reservoir (Fig. 1). A flexible, transparent cylinder could also be used to decrease the effective size of the reservoir to that approaching a seal or bearing. Rotational speed varied in a continuous manner. In some tests the shaft container interface was sealed by cooling the oil to form a natural plug (8). The entrained bubbles were formed simply by pouring oil into the reservoir. The entrained bubble motion and shaft rotation were photographed at 400 pictures/sec.

ANALYSIS

It is well known from balancing the radial forces that an entrained gas in a liquid will migrate against the body force field and establish itself at a balance point - which, in this case, is either about the centerline or about the shaft. The puzzling part is that the bubble appears as nearly solid-body rotation - the bubbles approach one shaft radius in diameter and are whirling about with the oil. However, if one establishes the flow field for a shaft ($r = R$) in an infinite reservoir, the flow field is nearly solid body close to the shaft ($R < r < KR$). Apparently, the

outer limit of the oil flow field possesses a shear layer that, not only limits the escape of the vapor, but distorts the bubble as well (Fig. 2).

Single Phase

For a single-phase fluid bounded between two concentric cylinders, the torque applied by the rotating inner cylinder (shaft) on the fluid is found from a solution to the momentum equation

$$T = -\frac{\langle T\rangle m K^2}{1 - K^2} \tag{1}$$

where

$$\langle T\rangle = 4\pi L\omega R^2 \tag{2}$$

Here, R is the inner cylinder radius, KR is the outer cylinder radius, and the angular velocity is

$$V_\theta = \frac{R\omega}{1 - K^2}\left[\frac{r}{R} - \frac{K^2 R}{r}\right] \tag{3}$$

It is clear that the ratio of the torque applied to a gas to that applied to a liquid is determined by the ratio of viscosities

$$\frac{T_g}{T_\ell} = \frac{\mu_g}{\mu_\ell} \tag{4}$$

Two-Phase

If it were possible to segregate the fluid domain encompassing the shaft into x domains of vapor (gas) and $(1 - x)$ domains of liquid, assuming a liquid/vapor-slip ratio of unity, the torque would become

$$\frac{T_g}{T_\ell} = \left(\frac{\mu_g}{\mu_\ell}\right)\left(\frac{x}{1 - x}\right) \tag{5}$$

However, eq. (5) possesses a singularity at the saturated vapor locus and a better representation becomes

$$\frac{T}{\langle T_1\rangle} = \frac{T_g + T_\ell}{\langle T_1\rangle} \tag{6}$$

where

$$\langle T_1\rangle = \langle T\rangle \frac{K^2}{K^2 - 1} \tag{7}$$

From eq. (6), it is clear that the torque is significantly reduced by adding a small amount of gas (vapor).

Attached Bubble

For a bubble attached to the rotating shaft, we assume that the flow field and outer cylinder can be replaced by a fluid with a stress tensor defined by eq. (8). The outer cylinder boundary KR is now replaced by a pseudo boundary r_0.

$$\begin{aligned} \tau &= -\left(\mu_0 - \frac{\tau_0}{\tau_{ref}}\right)\Delta \qquad && \tau:\tau > 2\tau_0^2 \\ &= 0 && \tau:\tau < 2\tau_0^2 \end{aligned} \tag{8}$$

where

$$\left(\tau_{ref}\right)^2 = \frac{\Delta\Delta}{4} \tag{9}$$

and the rate of deformation tensor is

$$\begin{aligned} \frac{1}{2}\Delta\Delta &= \sum_i\sum_j\left(\frac{dv_i}{dx_j} + \frac{dv_j}{dx_i}\right)^2 \\ &= \tau:\Delta V - \frac{2}{3}(\nabla\cdot V) \end{aligned} \tag{10}$$

which is commonly known as the Bingham plastic model. For our model $\tau_{r\theta}$ is the dominant term

$$\frac{1}{2}\tau:\tau = \left(\tau_{r\theta}\right)^2 \tag{11}$$

and solving gives the circumferential velocity as

$$Z = \begin{cases} 1 & R < r < r_0 \\ 1 - \dfrac{T}{\langle T_0\rangle}\left[1 - \left(\dfrac{r_0}{r}\right)^2\right] \pm \dfrac{\tau_0}{\mu\omega}\ln\left(\dfrac{r}{r_0}\right) & r_0 < r < \infty \end{cases} \tag{12}$$

where $r_0 = KR$,

$$Z = \frac{V_\theta}{r\omega} \tag{13}$$

and

$$\langle T_0\rangle = \frac{T}{2\pi\mu_0 r_0^2 L\omega} \tag{14}$$

Further, assuming that $KR = r_0$ is known, equating the torque applied to the vapor between the concentric cylinders to that of the Bingham model provides an expression for τ_0.

$$\tau_0 = \frac{2\omega\mu_g}{K_0^2 - 1} \tag{15}$$

where

$$K_0 = \frac{r_0}{R} \tag{16}$$

The circumferential velocity of eqs. (12) and (13) becomes

$$\frac{V_\theta}{r\omega} = 1 - \frac{1 - \left(\frac{r_o}{r}\right)^2 \pm 2 \ln\left(\frac{r}{r_o}\right)}{K_o^2 - 1} \tag{17}$$

where r_m is the radius when $V_\theta = 0$.

To establish a limiting value for r_m, V_θ is set equal to 0, and eq. (17) becomes

$$K_o^2 - 1 = 1 - \left(\frac{r_o}{r_m}\right)^2 \mp \ln\left(\frac{r_m}{r_o}\right)^2 \tag{18}$$

and

$$K_o^2 = 2 - Y^{-1} \mp \ln Y \tag{19}$$

where

$$Y = \left(\frac{r_m}{r_o}\right)^2 \tag{20}$$

For attached bubbles with diameters of 0.5, 1, and 2 shaft radii, the values of r_m are approximately 25 mm (2 in.), 130 mm (50 in.), and ∞.

With such a definition of the shear layer, one can expect nearly solid-body rotation to a radius of r_o with viscous flow at larger values of r. Since the radial pressure gradient is given directly in terms of the angular velocity,

$$\frac{dp}{dr} = \frac{\rho V_\theta^2}{r} \tag{21}$$

it is clear that the vapor is 'held' adjacent to the shaft by the difference in densities, or

$$\frac{dp}{dr} = \frac{(\rho_\ell - \rho_g)V_\theta^2}{r} \tag{22}$$

and that this is strongly dependent on the rotational speed. Further, as the interface $r = r_o$ is approached, the gas entrained into a bubble should become distorted by the change in shear as defined by eq. (12) or (17).

EXPERIMENTAL RESULTS

To achieve gas or vapor entrainment into the fluid, an oil was poured into the reservoir, and the shaft rotated at selected speed. The vapor adjacent to the shaft rapidly formed what appeared to the unaided eye as a vapor torus with a slower fluid/bubble motion within the reservoir. High-speed motion pictures taken at 400 frames/sec revealed individual gas cavities adhering to the shaft and rotating at nearly synchronous speed (Fig. 3). The bubbles were rather distorted at their apex because of shear at the interface and appeared to locally "lock" oil between them to complete the "solid-body rotation." These bubbles extended 0.6 shaft radii from the shaft surface; they also tended to migrate along the shaft and to coalesce. Large bubbles would lose gas to the oil. That gas would then appear as tracers in the oil. When the seals were not cooled, some void would migrate toward the seal aperture and disrupt the flow (reduce the leakage).

Applications to other data for seals, bearings, and pumps have not been addressed, but such entrainment effects should be expected when the fluid is two-phase. At higher rotational speeds and during transition to turbulence, the bubble size and rotational synchronization are expected to be limited. Further, as the reservoir approaches that for the classic flows in rotating annuli, the entrained bubbles are expected to merge into Taylor vortices.

SUMMARY

An experimental program has been carried out to determine the nature of the flow field about entrained gases in liquids (air/oil in this study). The entrained gas formed bubbles that were observed to rotate with the shaft in nearly a synchronous manner for selected rotational speeds. A simple analysis using a Bingham fluid was used to describe the phenomena.

REFERENCES

1. Swales, P. D., "A Review of Cavitation Phenomena in Engineering Situation," Cavitation and Related Phenomena in Lubrication; Proceedings of the 1st Leeds-Lyon Symposium on Tribology, Mechanical Engineering Publications, London, 1975, pp. 3-9.
2. Khalil, M. F., and Rhodes, E., "Effect of Air Bubbles on Externally Pressurized Bearing Performance," Wear, Vol. 65, 1980, pp. 113-123.
3. Beeler, R., and Hughes, W., "Dynamics of Two-Phase Face Seals." To be published in ASLE Transactions, Vol. 27, No. 2, 1984.
4. Tønder, K., "Effect of Gas Bubbles on Behavior of Isothermal Michell Bearings," Journal of Lubrication Technology, Vol. 99, No. 3, July 1977, pp. 354-358.
5. Marsh, H., "Cavitation in Dynamically Loaded Journal Bearings," Cavitation and Related Phenomena in Lubrication; Proceedings of the 1st Leeds-Lyon Symposium on Tribology, Mechanical Engineering Publications, London, New York, 1975, pp. 91-95.
6. Parkins, D. W., and Stanley, W. T., "Characteristics of an Oil Squeeze Film," Journal of Lubrication Technology, Vol. 104, No. 4, Oct. 1982, pp. 497-503.
7. Braun, M. J., and Hendricks, R. C., "An Experimental Investigation of the Vaporous/Gaseous Cavity Characteristics of an Eccentric Journal Bearing," ASLE Transactions, Vol. 27, No. 1, Jan. 1983, pp. 1-14.
8. Hendricks, R. C., "A Refrigerated Dynamic Seal." NASA TM-83378, 1983.

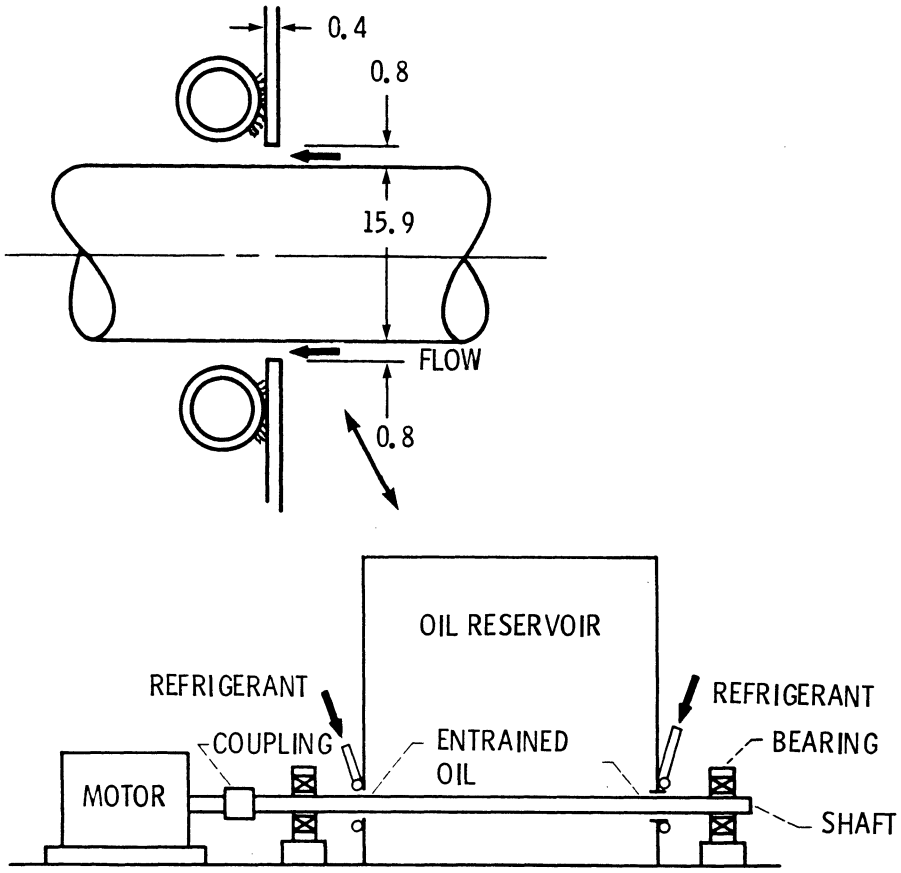

Fig. 1. - Schematic of experimental apparatus.

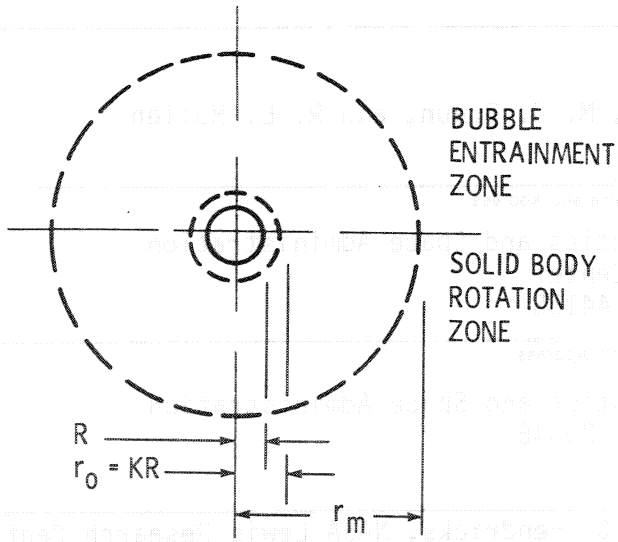

Fig. 2. - Model of bubble entrainment about a rotating shaft.

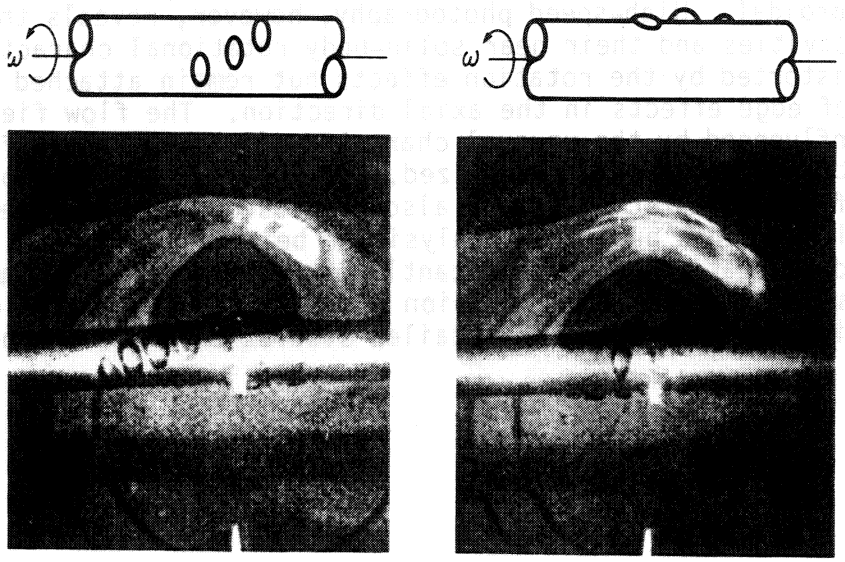

(a) PLAN VIEW (b) EDGE VIEW

Fig. 3. - Entrainment of air bubbles in oil about a rotating shaft.

1. Report No.	2. Government Accession No.	3. Recipient's Catalog No.
NASA TM-83586		

4. Title and Subtitle	5. Report Date
Experimental Study of Bubble Cavities Attached to a Rotating Shaft in a Reservoir	6. Performing Organization Code: 505-32-52
7. Author(s): R. C. Hendricks, M. J. Braun, and R. L. Mullen	8. Performing Organization Report No.: E-1975
	10. Work Unit No.
9. Performing Organization Name and Address: National Aeronautics and Space Administration, Lewis Research Center, Cleveland, Ohio 44135	11. Contract or Grant No.
	13. Type of Report and Period Covered: Technical Memorandum
12. Sponsoring Agency Name and Address: National Aeronautics and Space Administration, Washington, D.C. 20546	14. Sponsoring Agency Code

15. Supplementary Notes R. C. Hendricks, NASA Lewis Research Center; M. J. Braun, University of Akron, Dept. of Mechanical Engineering, Akron, Ohio 44325; R. L. Mullen, Case Western Reserve University, Dept. of Civil Engineering, Cleveland, Ohio 44106. Prepared for the Cavitation and Multiphase Flow Forum sponsored by the American Society of Mechanical Engineers, New Orleans, Louisiana, February 11-17, 1984.

16. Abstract

An experimental study of bubble cavities formed by air entrainment and attached to a rotating shaft in an oil reservoir is presented. The cavities appear to the unaided eye as toroidal. High-speed photography, however, reveals the individuality of the bubble cavities and their near solid-body rotational characteristics. The cavities are distorted by the rotation effects but remain attached and tend to merge because of edge effects in the axial direction. The flow field within the reservoir is influenced by the unusual character of the two-phase fluid found there; the vorticity is readily visualized. Other examples of vapor entrapment at the inlet of an eccentric rotor are also discussed. A simplified analytical method is provided, and a numerical analysis is being investigated. Vapor (void) entrainment and generation can significantly alter leakage rates and stability of seals, bearings, and dampers. Recognition of these effects in the component design systems will result only after detailed studies of the above phenomena.

17. Key Words (Suggested by Author(s))	18. Distribution Statement
Two-phase flow Cavitation Seals Bearings	Unclassified - unlimited STAR Category 34

19. Security Classif. (of this report)	20. Security Classif. (of this page)	21. No. of pages	22. Price*
Unclassified	Unclassified		

*For sale by the National Technical Information Service, Springfield, Virginia 22161