NASA CR-165577
DOE/NASA/0149-
UTC GTR-3932

LOW NO_x HEAVY FUEL COMBUSTOR CONCEPT PROGRAM

Phase IA Coal Gas Addendum Final Report

Power Systems Division
United Technologies Corporation

January 1982

PREPARED FOR

NATIONAL AERONAUTICS
AND SPACE ADMINISTRATION
Lewis Research Center
Under Contract DEN3-149

FOR

U.S. DEPARTMENT OF ENERGY
Fossil Energy
Office of Coal Utilization

NOTICE

This report was prepared to document work sponsored by the United States Government. Neither the United States nor its agent, the United States Department of Energy, nor any Federal employees, nor any of their contractors, subcontractors, or their employees, makes any warranty, express or implied, or assumes any legal liability or responsibility for the accuracy, completeness, or usefulness of any information, apparatus, product or process disclosed, or represents that its use would not infringe privately owned rights.

NASA CR
DOE/NASA/0149-
GTR-3932

FINAL REPORT

LOW NO_x HEAVY FUEL COMBUSTOR CONCEPT PROGRAM

Phase IA Coal Gas Addendum

4 January 1982

Prepared by

UNITED TECHNOLOGIES CORPORATION
Power Systems Division

Program Manager
Fred S. Kemp

Technical Coordinator
Richard A. Sederquist

and

United Technologies Research Center

Principal Investigator
Dr. Thomas J. Rosfjord

Prepared for

NATIONAL AERONAUTICS AND SPACE ADMINISTRATION

Contract DEN 3-149

LEWIS RESEARCH CENTER
Cleveland, Ohio

Donald Schultz, Technical Manager

FOREWORD

This final report was prepared by the Power Systems Division of United Technologies Corporation (PSD/UTC) under contract DEN 3-149 "Low NO_x Heavy Fuel Combustor Concept Program", Phase IA Coal Gas Addendum. It encompasses the work under the Phase IA program (29 June 1981 to October 1981).

Contract DEN 3-149 was sponsored by the Department of Energy under the administration of the National Aeronautics and Space Administration (Lewis Research Center (DOE/NASA-LeRC). Donald Schultz of NASA/LeRC was the technical manager.

The Power Systems Division Program Manager was Fred Kemp and the Technical Manager was Richard Sederquist. Dr. Thomas Rosfjord was Primary Investigator for the Phase IA project at the United Technologies Research Center (UTRC). Also contributing to the technical effort of UTRC were Roy Pelmas, Dr. John McVey and Jan Kennedy.

TABLE OF CONTENTS

Section		Page
	FOREWORD	
	TABLE OF CONTENTS	
	LIST OF ILLUSTRATIONS	
	LIST OF TABLES	
	ABSTRACT	
	SUMMARY	
I	INTRODUCTION	
II	TEST PROGRAM	
	Test Rig	
	Test Fuels and Fuel Delivery Systems	
	Instrumentation	
	Data Acquisition and Reduction	
III	TEST RESULTS	
	Test Conditions	
	Common Combustion Characteristics	
	Test Results for Medium Heating Value (MHV) Fuel	
	Comparison of Test Results for Medium Heating Value - Fuel Nitrogen (MHV-FN) and MHV Fuels	
	Comparison of Test Results for Enhanced Heating Value (EHV) and MHV Fuels	
	Comparison of Test Results of Low Heating Value (LHV) and MHV Fuels	
IV	CONCLUSIONS	
V	REFERENCES	
	NASA FORM C-168	

ILLUSTRATIONS

Figure		Page
1	Synthetic Fuel Combustor Rig	
2	Rich-Lean Combustor Hardware	
3	Gaseous Fuel Injector	
4	Subscale Rich-Lean Combustor Configuration	
5	Quench Section of Subscale Combustor	
6	Gaseous Fuel Delivery System	
7	Exit Plane Instrumentation	
8	Emissions Sampling and Analysis System	
9	NO_x Dependence on Primary Combustor Equivalence Ratio for MHV Fuel	
10	Comparison of Exhaust Emissions for Operation at Exit Temperatures of 1367K and 1644K	
11	Effects of NH_3 Addition to NO_x Signature	
12	Dependence of NH_3 Conversion on Primary Combustor Equivalence Ratio	
13	Comparison of NO_x Signature for MHV and EHV Fuels	
14	CO Emission Dependence on Primary Combustor Equivalence Ratio for LHV Fuel	
15	Equilibrium CO Levels for MHV and LHV Fuels	

TABLES

Table Page

I Coal Gas Test Fuels

II Test Rig Instrumentation

III Emissions Analysis Instrumentation

IV Test Conditions

ABSTRACT

An experimental program to investigate the performance and emissions from a rich-lean combustor fired on coal gas fuels has been conducted. The burner was a 12.7-cm diameter axially-staged device originally designed for operation with high heating value liquid fuels. A simple, tubular fuel injector was substituted for the liquid fuel nozzle; no other combustor modifications were made. Four test fuels were investigated including three chemically bound nitrogen-free gas mixtures with higher heating values of 88, 227, and 308 kJ/mol (103, 258 and 349 Btu/scf), and a 227 kJ/mol (258 Btu/scf) heating value doped with ammonia to produce a fuel nitrogen content of 0.5 % (wt). Stable, ultra-low NO_x, smoke-free combustion was attained for the nitrogen-free fuels. Results with the doped fuel indicated that less than 5 percent conversion of NH_3 to NO_x and NO_x levels below Environmental Protection Agency (EPA) limits could be achieved. In some instances, excessive CO levels were encountered. It was shown that use of a burner design employing a less fuel-rich primary zone than that found optimum for liquid fuels would yield more acceptable CO emissions.

SUMMARY

Rich-lean staged combustors have demonstrated the ability to achieve stable, efficient, low NO_x emission operation on a variety of liquid fuels. An experimental study has been conducted to determine whether this fuel tolerant characteristic can be extended to include gaseous fuels representative of products from coal gasification processes. Tests were performed in a 12.7-cm diameter staged combustor originally designed and operated on liquid fuels. A simple, single tube gaseous fuel injector was substituted for the liquid fuel nozzle; no other modifications were made to the burner. Four test fuels were investigated. The baseline fuel was a gaseous mixture consisting of 40% CO, 40% H_2 and 20% CO_2 (vol) to achieve a higher heating value of 227 kJ/mol (258 Btu/scf). A low heating value (88 kJ/mol (100 Btu/scf) was produced by mixing 40% baseline fuel and 60% N_2. The third fuel was the baseline fuel, with 4% (vol) propane to enhance the heating value to 308 kJ/mol (349 Btu/scf). Ammonia (0.7% (vol)) was added to the baseline fuel to produce the fourth gas which possessed 0.5% (wt) fuel nitrogen. Tests were conducted at conditions corresponding to full and partial power-design operating points of a 30-MW industrial gas turbine combustor.

Test results indicate that use of a staged, rich-lean combustor represents a desirable approach to achieve stable, low emission operation for coal gas fuels with heating values of 227 kJ/mol (258 Btu/scf) or higher. Ultra-low NO_x levels (less than 25 ppm) were achieved for operation with a primary combustor equivalence ratio (ϕ_p) of 1.2 or greater. The exhaust stream was always smoke-free and contained no detectable hydrocarbon specie. Carbon monoxide levels were marginally acceptable at the design point tests with $\phi_p = 1.6$, and decreased to ultra-low levels (less than 25 ppm) for the range $1.0 < \phi_p < 1.5$. Tests with a fuel doped with ammonia indicated that NH_3 to NO_x conversion levels of less than 5% and NO_x levels below EPA limits can be achieved.

Test results using a low heating value fuel (88 kJ/mol (100 Btu/scf)) indicated that minimal NO_x and CO emissions would be achieved by use of a lean combustor. The low heating value of the fuel precludes the existence of high temperature

regions, even for stoichiometric mixtures, necessary for significant NO_x formation. Hence the burner configuration should be optimized to achieve high CO burnup. Results from limited tests indicated that CO levels of less than 20 ppm could be achieved for $\phi_p = 0.8$.

As a result of the data acquired in this program, it can be concluded that the previously demonstrated fuel tolerance of the staged rich-lean combustor concept can be extended to include coal gases. Stable, efficient, low emission operation can be achieved with these fuels. In some instances (e.g., low heating value fuels) it will be necessary to alter the combustor airflow to produce a staged, lean device (lean/lean) to achieve the ultra-low emissions characteristics. The methods of achieving the airflow distribution alteration required to provide the flexibility of operation with different fuel by types which would require knowledge of the system requirements along with the information on burner characteristics produced in this program.

SECTION I
INTRODUCTION

Coal represents an abundant energy resource in the United States. Currently, technology is being developed to optimize the manner in which this fuel will be utilized. Several alternatives exist including combusting the solid fuel in furnaces, liquifying or gasifying the coal for use in furnaces or gas turbine combustors, or some combination of these strategies. Selection of the most desirable approach will depend on many factors, one of which will likely be the environmental impact of the fuel combustion process. Of particular concern will be the level of undesirable combustor exhaust emissions, including nitric oxides (NO_x), carbon monoxide (CO), and smoke.

Coal-derived fuels can represent a significant challenge to attempts to control these species. Coal-derived fuels can be hydrogen deficient, promoting increased smoke emissions, and can contain levels of nitrogen which, if fully oxidized, will result in unacceptable NO_x levels. Fuels produced by a coal gasification process would be deficient in volumetric heating value, possessing energy densities less than 35% of the heating value of natural gas. Combustor stability and efficiency may be affected by utilizing this product. Additionally, the gaseous fuel may contain ammonia (its presence is dependent on the fuel cleanup process employed) which could be oxidized to undesirable levels of NO_x. Recent test results (ref. 1) with a staged, rich/lean combustor have indicated a considerable tolerance for variation in the liquid fuel properties while retaining a low exhaust emission characteristic. In this combustor, the fuel is first partially-oxidized in a fuel-rich chamber which favors the conversion of fuel nitrogen to molecular nitrogen rather than NO_x. The balance of the total airflow is rapidly mixed in a quench section with the rich chamber effluent. Rapid mixing of the secondary air (quench air) and rich chamber gases is necessary to avoid long flow residence times for near stoichiometric mixtures and consequently to avoid significant formation of NO_x by a thermal fixation mechanism. The mixture is subsequently fully oxidized in a fuel-lean combustor designed to permit consumption of residual hydrocarbons and CO. Such a rich-lean combustor has demonstrated the ability to achieve stable, efficient

low-smoke combustion with distillate fuels with hydrogen content down to 9% (wt), while restricting NO_x emissions to 40 ppm despite fuel nitrogen levels up to 0.8% (wt). The objective of this program was to determine whether this demonstrated fuel tolerance could be extended to include coal gas fuels.

United Technologies Corporation (UTC) under an addendum to National Aeronautics and Space Administration (NASA) Contract DEN 3-149 funded by the Department of Energy (DOE) has conducted an experimental program to evaluate the performance and emissions of a staged, rich/lean combustor fired on gaseous fuels representative of the products from entrained and moving-bed gasifiers. Four test fuels were investigated including three, chemically bound nitrogen-free gas mixtures with higher heating values of 88, 227, and 308 kJ/mol (103, 258 and 349 Btu/scf), and a 227 kJ/mol heating value fuel doped with ammonia to produce a fuel nitrogen content of 0.5% (wt). The tests were performed at four conditions representative of industrial gas turbine operating conditions.

SECTION II
TEST PROGRAM

This section of the report describes the test facility and the test fuels used in the experimental combustor test program. Also described are the test rig instrumentation, the data acquisition system, and the data reduction procedures.

TEST RIG

The test rig is shown schematically in Figure 1. The rig consisted of an air inlet section, a model rich/lean combustor and an exhaust section.

The air inlet section provided airflow to the model combustor which satisfied the requirements of the test matrix (see Section III). Air was supplied to the test cell by a positive displacement compressor which could provide continuous airflow rates up to 1.8 kg/s at pressures up to 4.0 MPa. The flow rate to the rig was determined using a calibrated venturi with a throat diameter of 1.59 cm. An electrical resistance type heater capable of heating airflows in excess of 1.8 kg/s to 644 K was used; lesser airflows could be heated to higher temperatures (e.g., 1.1 kg/s heated to 811 K. The airflow which exited the heater was divided into a primary airflow, which fed the rich-stage combustor, and a secondary airflow which was injected through the combustor quench section. Variations in the primary-secondary airflow split were achieved by actuating a pneumatic control valve located in the primary air line; a high temperature gate valve located in the secondary air line provided the supply system pressure drop necessary for control. A calibrated venturi was located in the primary line to meter the primary airflow and hence permit calculation of the rich combustor equivalence ratio. The secondary airflow rate was calculated as the difference of the total and the primary airflow rates.

The rich-burn/quick-quench combustor concept was initially developed by Pratt & Whitney Aircraft/Government Products Division (PWA/GPD) under sponsorship of

the EPA Contract 68-02-2136 (ref. 2). In that program low levels of emissions were produced using a distillate fuel doped to contain up to 0.5% nitrogen. During Phase I of NASA Contract DEN 3-149 funded by DOE, PWA/GPD further developed the concept in an attempt to evolve a burner which would permit reliable and environmentally acceptable combustion of minimally processed residual fuels and synthetic fuels (ref. 3). The model combustor used in the gaseous fuel (Phase IA) study was a copy of rich-burn/quick-quench combustor Configuration 2C developed by PWA/GPD in the Phase I study and consisted of four components (Figure 2):

- Fuel preparation section
- Fuel-rich combustion section
- Air quench section
- Fuel-lean combustion section

The fuel preparation section consisted of a single fuel injector which was centrally mounted in an annular, vane-type swirler. The 5.08-cm diameter swirler was constructed from 18 equally-spaced vanes oriented at a 45° angle to the combustor axis; it was recessed approximately 3.05 cm from the rich chamber inlet.

A direct injection technique rather than a premixing fuel preparation system was used in this program. No attempt was made to premix the fuel with air prior to injection into the combustor. Rather, the gaseous fuel was injected from a simple nozzle directly into the rich combustion chamber. The device used was a 2.54-cm diameter closed-end tube containing eight equally-spaced holes around the tube circumference at the closed end and nine small holes in the end cap (Figure 3). The total injection area was specified to achieve a desired pressure drop; the end cap open area was set to pass 10% of the fuel flow to both cool the cap and blow off recirculating flow regions which might contribute to the stabilization of flame at the injector face. Combustor shakedown tests were conducted using a propane/nitrogen mixture having a heating value of 265 kJ/mol. These tests indicated that stable combustion was not achieved under certain conditions due to what appeared to be feed-system-coupled flow instabilities. A high pressure drop injector (approximately 0.95 MPa at the baseload fuel flow) alleviated this condition to a large

degree. Except for the one instance noted hereafter, the reported data were acquired with injectors which operated with this pressure drop level. At the end of the experimental program, an additional test was performed to determine whether a lesser injector pressure drop would be acceptable for use with the $CO/H_2/CO_2$ gas mixture (which was expected to provide greater stability than the propane-nitrogen gas used when burner instability was observed). The results (Section III) indicated that stable combustion could be sustained for an injector pressure drop as low as 3.4 kPa. Two different injectors were used in the test program. For the medium and enhanced heating value fuels, 0.24 cm diameter injection holes were specified. For the low heating fuel, which required considerably greater mass flow rates, 0.46-cm diameter injection holes were specified. Each fuel injector was located in the rich combustion chamber such that the injection plane was 7.62 cm downstream from the swirler.

The fuel-rich combustion chamber was a 12.7-cm diameter cylindrical section, 30.2-cm long, with 3.0-cm long conical sections at both the inlet and exit (Figure 4). The total volume of this chamber was 4540 cm^3; the surface area was 1616 cm^2. The entire chamber was double-jacketed to allow a nominal 1.58 l/s water coolant flow rate. An H_2/O_2 torch was incorporated for use as an igniter. The quench section was a 7.62-cm diameter cylindrical section, 7.62-cm long, containing eight pairs of slots through which the secondary airflow was admitted (Figure 5). The fuel-lean combustor consisted of a 26.9-cm long conical diffuser followed by a 12.7-cm diameter cylindrical section. The overall length from the quench section exit to the exhaust measurement plane was 45.7 cm. The lean combustor was also double-jacketed; the water coolant used for the rich burner was routed in series fashion to the lean burner.

The exhaust section contained two important components: a viewport and a back pressure valve. The viewport contained a 7.62-cm diameter quartz window which provided direct observation of the combustor exit plane via an available closed-circuit television system. The video image was monitored in the control room and recorded with an audio track to provide a permanent record of the test sequence.

A remotely-operated back pressure valve was used to control the test section pressure. A high pressure water quench was used to reduce the gas temperatures upstream of the valve to less than 700 K.

TEST FUELS AND FUEL DELIVERY SYSTEMS

The four test fuels used in this investigation are specified in Table I. The mixtures ranging in higher heating value from 88.2 to 309 kJ/mol are representative of the products of coal gasification processes. The baseline fuel was a 40% CO/40% H_2/20% CO_2 (vol) mixture supplied by a vendor in a multiple-tube trailer. Analyses of the delivered mixture indicated that the deviation from the above nominal values was less than 2 percentage points. This mixture had a higher heating value of 227 kJ/mol and was referred to as the medium heating value (MHV) fuel. It represented the heating value from an oxygen-blown entrained gasifier such as a Texaco gasifier (see Table I for typical gas compositions). The other three fuels were prepared by mixing an additional component to the baseline fuel. Nitrogen was added to the baseline fuel to produce a low heating value (LHV) fuel with a heating value of 91 kJ/mol. This product is typical of that produced by air-blown gasifiers. Propane was blended with the baseline fuel to produce an enhanced heating value (EHV) fuel with a heating value of 308 kJ/mole. The addition of a hydrocarbon resulted in a heating value representative of the higher heating value product from an oxygen-blow moving-bed LURGI gasifier (see Table I for typical gas compositions). The major hydrocarbon constituent in this type gasifier product gas is methane. Propane was used in these tests because of its availability at the test stand. Ammonia was added to the baseline fuel at a level sufficient to produce a fuel nitrogen content of 0.5%. Ammonia is a potential gasifier product, depending on the gas cleanup system employed. The level of conversion of ammonia to NO_x exhaust emissions was documented by tests with this medium heating value - fuel nitrogen (MHV-FN) fuel.

The fuel mixtures were prepared on-line using the system depicted in Figure 6. Each component was individually metered and regulated. Actuation of the proper

subsystems resulted in the desired test fuel. All mixtures passed through a 0.68 MPa saturated steam heat exchanger to elevate the fuel temperature to approximately 433 K. Combustors which are closely coupled to coal gasifiers will receive heated fuel; the level of heating depends on the fuel cleanup technique (temperature) and energy recovery (regenerative heat exchange) in the system. The 433 K level used in the present program reflected a facility limit for the required fuel flowrates.

The fuel heating also assured that the propane used to produce the EHV fuel was fully vaporized.

INSTRUMENTATION

The test rig was instrumented in accordance with standard practices; the parameters measured are listed in Table II. The total airflow was metered using a calibrated venturi located upstream of the air heater; the venturi was sized to operate in the choked mode for all test conditions. The primary airflow was metered by another calibrated venturi; this venturi operated with pressure ratios between 0.55 and 0.75. The flowrates of the baseline fuel, nitrogen and ammonia were metered by venturis; propane flowrate was determined using a calibrated turbine meter. Pressures and temperatures were measured at various locations by use of pressure transducers and thermocouples having appropriate calibration ranges. The combustor exit conditions were documented by use of a five-port ganged sampling probe, a three-point thermocouple rake, and a smoke probe (Figure 7).

The water-cooled sampling probe spanned the combustor diameter, and contained five, 0.86-cm diameter inlet orifices. The probe was designed to achieve an aerodynamic quick-quench of the captured streams in order to minimize chemical reaction within the probe. The captured sample was transferred through an electrically-heated sample line to an emissions analysis system (Figure 8) capable of continuously monitoring the emissions of carbon monoxide, oxygen, carbon dioxide, unburned hydrocarbons, and oxides of nitrogen. The output signal and attenuator

position for each instrument were automatically transferred to the data acquisition system. A listing of the instrument types, including ranges and accuracies, is given in Table III.

A water-cooled smoke probe was designed in accordance with specification SAE ARP1179. The probe, which had a sample inlet diameter of 1.9 mm, was sized to isokinetically sample the gas stream at the baseload condition. The smoke sample was transferred through an electrically-heated sample line to a smoke filter where a smoke sample was collected in accordance with specification SAE ARP1179. The smoke spots were collected on Whatman No. 4 filter paper; sample reflectance was subsequently measured using a calibrated reflectometer. A low volume airflow purge was passed through the smoke transfer line during either combustor startup or transition to a new test condition in order to preclude contamination of the sampling system.

Three PT6RH/PT30RH thermocouples and vented radiation shields were mounted on a water-cooled strut. The material used for the exposed portions of the thermocouple sheath and the radiation shield was a platinum alloy which provided a significant temperature safety margin (maximum operating temperature of 1867 K).

DATA ACQUISITION AND REDUCTION

The test conditions were established based upon values of key parameters displayed in the jet burner test stand control room. Principal items monitored included:

- Pressure upstream and at the throat of both the total and primary airflow venturis
- Pressure and temperature of both the primary and secondary airflows
- Rich combustor pressure
- Pressure upstream of each gaseous fuel component venturi; turbine meter output for propane
- Coolant flow rates.

The complete set of test data were recorded by means of an automatic data acquisition system which recorded the information on magnetic tape for subsequent computer processing. The data system accepts analog data on 25 channels, 10 channels were provided with signal conditioners and the remainder were compatible with preconditioned input signals. The system was capable of controlling and accepting data from sub-multiplexers such as pressure and thermocouple scanning switches. Data channels were scanned sequentially at the rate of 12 channels per second; whenever a sub-multiplexer was connected to a channel, all ports or stations were sampled before proceeding to the next channel. An analog-to-digital converter digitizes the data and an incremental magnetic tape recorder stored the data for subsequent computer processing. The format of the tape was structured for compatibility with the UTRC UNIVAC 1100 digital computer.

Computed Parameters

The recorded data were used to compute several parameters which characterized the test condition and combustor performance. In addition to the directly measured parameters (e.g., PRICH), the following computed parameters were included (refer to Table 2 for symbol definition).

Total Airflow - WAT

The total airflow was calculated using a compressible flow venturi equation:

WAT = function (PVUPT, PVTHT/PVUPT, TVVPT)

Primary Airflow - WAP

The primary airflow was calculated using a compressible flow venturi equation:

WAP = function (PVUPP, PVTHP/PVUPP, TVUPP)

Fuel Flow Rate - WFT

The flowrate of each gaseous fuel component was calculated using a compressible flow venturi equation. The propane flowrate was calculated from the turbine meter output and the propane temperature. The total fuel flowrate was the sum of the component flowrates for the fuel being tested. The actual fuel mixture was used to compute the mixture heating value and stoichiometric fuel-air ratio (FAST).

Overall Fuel-Air Ratio - FOV

The overall fuel-air ratio was the quotient of WFT and WAT:

$$FOV = WFT/WAT$$

Primary Combustor Equivalence Ratio - PHIP

The equivalence ratio in the fuel-rich combustor was the quotient of WFT and WAP, normalized by the stiochiometric fuel-air ratio for the test fuel:

$$PHIP = WFT/WAP/FAST$$

Emission Concentration and Index - PPM_i EI_i

The concentration of CO, UHC, NO_x, CO_2 and O_2 were determined from the respective analyzer output and appropriate calibration curve. The emissions index for species i was calculated according to:

$$EI_i = 10^{-3}\ PPM_i \quad \frac{MW_i}{MW} \quad \frac{1 + FOV}{FOV}$$

where PPM_i and MW_i were the concentration and molecular weight species of i, and MW was the molecular weight of product mix. The UHC concentration was analyzed as equivalent methane; the emission index of NO_x used the molecular weight of NO_2.

Correction Factor to 15% O_2, K15

The concentration of exhaust species was corrected to reflect a standardized gas stream containing 15% oxygen according to:

(Corrected concentration = measured concentration * K15)

$$K15 = \frac{0.2096 - 0.15}{0.2096 - XO2}$$

XO2 = O_2 mol fraction in exhaust stream

For an exhaust stream from a fuel-lean combustor, the correction factor can be equivalently stated as:

$$K15 = \frac{FA15}{FOV}$$

where:

F15 = fuel-air ratio which results in 15% O_2 in the product stream.

SAE Smoke Number - SN

The SAE smoke number was calculated from the reflectance of the clean filter paper (RC) and the smoke spot (RS):

$$SN = 100\ 1- \frac{RS}{RC}$$

Heat Flux for Primary Combustor - HRICH

The heat flux, representing both convective and radiative contributions to the primary combustor coolant was calculated from the temperature rise of the coolant:

$$HRICH = WC*C\ [(TCPEX)_{average} - TCIN]/AP$$

where:

WC	= coolant flowrate
C	= coolant heat capacity
AP	= surface area of rich combustor
$TCPEX_{average}$	= average primary combustor coolant exit temperature
TCIN	= coolant inlet temperature

SECTION III
TEST RESULTS

The results of tests using each of the four gaseous fuels are presented in this section. The test conditions are defined and the implications of the tests results on the ability of a staged, rich/lean combustor to operate with low levels of undesirable exhaust emissions are discussed.

TEST CONDITIONS

Tests were performed over the matrix of conditions indicated in Table IV. The general intent was to establish emissions and heat load characteristics for each test fuel to determine the effect of combusting coal-derived gaseous fuels in a staged burner. The conditions included design-point conditions (Conditions 1, 2, 3) representing burner operation at peak, baseload, and 50-percent power levels for a typical industrial gas turbine. The fourth condition was reduced pressure scaling of the peak-power design point (Peak-Low P); both pressure and airflow were reduced to maintain constant combustor residence time. This condition also served as the basis for two additional tests (Conditions 5, 6) to determine the effect of changing the primary combustor equivalence ratio (ϕ_p) on the combustor emissions. Together, these three tests were referred to as a signature series, and were generally performed by holding the total airflow and the split of airflow between the primary and secondary combustors constant while varying the fuel flow. This approach permitted changes in ϕ_p while keeping the primary combustor residence time constant. This technique is the desired one to determine the effectiveness of the primary combustor to minimize production of NO_x by either conversion of fuel nitrogen to NO_x or formation of NO_x because of locally near stoichiometric fuel-air ratios. With this approach the overall fuel-air ratio [(f/a) ov], and hence the secondary temperature varied as ϕ_p was changed. Because of the variation of lean combustion temperature levels associated with this mode of testing, the results should be used only to judge the NO_x behavior, not the CO emission behavior of the combustor. These six tests were performed for all test fuels and are referred to as the basic test conditions. Some of the preliminary

test results indicated that CO control, not NO_x control, was the greater challenge. In order to assess the influence of ϕ_p on CO emission levels for a constant (f/a)ov, a different signature test was performed. In these tests the total airflow and the fuel flow were held constant, but the airflow split between the two combustion chambers was varied to attain ϕ_p changes. In this approach the primary combustor residence time and the quench zone mixing process changed because of differing primary and secondary airflow rates.

COMMON COMBUSTION CHARACTERISTICS

There were two common characteristics for all combustion tests performed in this program. First, no smoke emissions were detected for any of the test fuels. Samples acquired according to ARP 1179 would be evaluated as having an SAE smoke number of two or less.

Second, the test fuels ignited easily and burned stably. Ignitability was not rigorously evaluated as the torch ignitor system delivered energy levels in excess of that available from conventional spark devices. It was observed, however, that unlike the propane/nitrogen fuel mixture used during shakedown testing, the coal gas fuels ignited promptly at any of the test conditions. Stable combustion was always achieved. As indicated in the discussion of the fuel injector (Section II), shakedown tests with the propane/nitrogen mixture indicated a need for high values of injector pressure drop to sustain stable combustion. Except for the one instance noted, the report data were acquired with injectors which imposed a pressure drop of approximately 0.96 MPa at the base load test condition. Unstable operation was believed to result from a pressure coupling between the fuel delivery system and the combustor. That is, it was suspected that normal, low amplitude fluctuations in the combustor pressure (i.e., combustion noise, not combustion instability) caused small perturbations in the fuel flowrate resulting in a fluctuating combustor stoichiometry. A random, high pressure pulse might sufficiently impede fuel flow to induce lean blowout of the combustor. Near the end of the test program an additional, limited investigation was performed to determine whether high pressure drop injectors were required for use with the medium heating value,

coal gas fuel. The test was performed at constant inlet air temperature and combustor pressure levels corresponding to the baseload test condition and a primary combustor equivalence ratio of unity. During the test, both the fuel and airflow rates were simultaneously reduced to lower the injector pressure drop while holding the fuel-air ratio constant. The fluctuations in the fuel injector and combustor pressure were monitored using close-coupled, high-frequency response transducers. Stable combustion was sustained for pressure drops down to the minimum value observed, 3.4 kPa. This stability characteristic was attributed to the hydrogen concentration in the fuel. The broad flammability limits of this gas would permit greater perturbations in the fuel-air stoichiometry without precipitating a blowout. It was also likely that the ignitability of hydrogen contributed to the ignition achieved when using coal-gas fuels.

TEST RESULTS FOR MEDIUM HEATING VALUE (MHV) FUEL

Tests were performed with the baseline MHV fuel to determine the emissions and heat load characteristics. Tests were performed under six basic test conditions (Table IV), and at additional conditions selected to provide information on the influence on performance and emissions of injector pressure drop and higher combustor exit temperature.

The NO_x emissions corresponding to an exhaust with 15% oxygen obtained from tests as the basic six conditions are plotted in Figure 9. Ultra-low NO_x levels were attained for all conditions, with the highest being 25 ppm at the Peak condition. The uncorrected NO_x data revealed a square root dependence on combustor pressure, identical to the commonly accepted pressure dependence for thermally-produced NO_x. No dependence of NO_x on ϕ_p was observed from the signature test results. Unlike test results with liquid fuels (ref. 1), there appeared to be no optimal value of ϕ_p to minimize NO_x. That is, the characteristic NO_x bucket was not observed. The absence of this feature coupled with the low NO_x levels observed and the previously noted thermal NO_x pressure dependence indicated that

little NO_x was produced in the rich stage and exhaust levels resulted from production of NO_x in the quench and fuel-lean combustor sections. Therefore, further NO_x reduction would likely not result from rich-stage optimization, but rather from quench and lean-combustor optimization.

The CO emissions were 150 ppm at the peak test condition, increasing to 500 ppm at the 50% power condition. This latter value would likely not be acceptable for a practical installation as it reflects a 0.5% combustion inefficiency. An improved lean burner design (e.g., longer residence time, air staging to produce a higher temperature secondary zone) could reduce the CO emissions levels.

The overall heat load on the primary combustor wall was determined from the temperature rise in the primary combustor coolant. An average heat flux of 4.73 x 10^5 J/m^{2}s was transferred to the wall in the signature tests, independent of ϕ_p. Tests with liquid fuels (ref. 1) have indicated a dependence on ϕ_p because of the generation of carbon particles. The absence of smoke emissions and this independence of heat load are mutually consistent features expected when combusting coal gas fuel. The heat load nearly doubled for operation at the peak condition, becoming 8.2 x 10^5 J/m^{2}s. This is attributed both to an increased convective heat transfer because of higher airflows, and increased radiative heat transfer due to the emissivity increase associated with pressure elevation. Calculations indicate that the contribution from both processes approximately doubled.

A signature test series was performed to determine the influence of elevating the combustor exit temperature to approximately 1644 K on the exhaust emissions. In this signature series, the overall fuel-air ratio was held constant with ϕ_p variation achieved by changing the division of airflow between the primary and secondary combustors. Figure 10 depicts the corrected NO_x and CO levels attained for operation at exit temperatures of 1644 and 1367 K. Ultra-low values of these species were attained for the 1367 K temperature test series. The NO_x increased as ϕ_p approached unity suggesting that some thermal fixation of nitrogen was occurring in the rich combustor. Tests at the elevated temperature resulted in increased levels for both NO_x and CO. When analyzed, this result implied that

the combustor fluid mechanics have been significantly altered. Despite the higher lean-burner temperature, and consequently accelerated CO consumption rates, higher CO levels were recorded. Therefore, the level of CO entering the lean burner must have been higher than experienced for the 1367 K temperature tests and/or the CO and secondary air must not have been well mixed in the quench section. It was likely that both of these influences existed. To achieve the higher exit temperature, the fuel flow was increased by approximately 50%. Additionally, to achieve the same ϕ_p, the primary airflow was increased by a similar age resulting in more than twice the mass flow through the rich burner for the elevated temperature condition. The reduced residence time at this combustor loading could curtail oxidation of the CO, resulting in excessive CO levels exiting the rich combustor. This concept is supported by the observation of a decreasing CO level as ϕ_p approached unity. The mixing processes occuring in the quench section were also degraded. The higher primary airflow resulted not only in a greater rich combustor effluent but also in a reduced quench airflow. The percentage penetration of the air jets emanating from the quench slots would be decreased and the mixing with the primary combustor gases would be less vigorous. Hence, some portions of the gas stream may have been deficient in oxidizer while others over-oxidized (and over-cooled by the quench air). The observed NO_x levels support this characterization. The substantial NO_x increase for the high exit temperature tests reflected a sluggish transition from fuel-rich to fuel-lean conditions, permitting additional formation of thermal NO_x. It is apparent from these results that achievement of lower NO_x and CO emissions at the higher combustor exit temperature would require re-design of the combustor to optimize the rich zone residence time and penetration of secondary air in the quench zone.

COMPARISON OF TEST RESULTS FOR MEDIUM HEATING VALUE - FUEL NITROGEN(MHV-FN) AND MHV FUELS

The tests using the MHV-FN fuel (containing chemically bound fuel nitrogen) were performed concurrently with the basic tests using the MHV fuel. That is, test conditions were established and data were acquired using the MHV fuel, followed by activation of the ammonia addition system and, subsequent to achieving a steady state, additional data acquisition.

The NO_x levels obtained for both the MHV and MHV-FN fuel are presented for comparison in Figure 11. The MHV fuel did not contain ammonia; the MHV-FN contained 0.7% (vol) NH_3 to achieve a fuel nitrogen content of 0.5% (wt). Substantially higher NO_x emissions were attained with the MHV-FN fuel reflecting conversion of the added ammonia to NO_x, although NO_x emissions well below the EPA limit can still be readily achieved. The increase in NO_x does not reflect a high absolute value of conversion rate, however. That is, because of the relatively low heating value of the fuel (i.e., approximately 25% of the heating value of natural gas) relatively large values of fuel-air ratio were required to reach the desired exit temperature. The quantity of ammonia added represented a potential NO_x increase of between 650-1000 ppm if it were fully converted whereas actual increases ranged between 25-80 ppm. The levels of conversion achieved are depicted in Figure 12. The value of ϕ_p dominates the conversion, with maximum values of nearly 10% for $\phi_p = 1.8$. CO emission levels were similar to those achieved for the MHV fuel, making it desirable to operate at low-rich-zone equivalence ratios to reduce this specie. Hence, a NH_3 conversion level of less than 5% would be realized.

COMPARISON OF TEST RESULTS FOR ENHANCED HEATING VALUE (EHV) AND MHV FUELS

A metered quantity of propane was added to the MHV fuel to produce EHV fuel simulating a hydrocarbon containing a product gas heating value representative of a moving-bed gasifier such as a LURGI coal gasifier. The EHV fuel mixture contained approximately 4% (vol) propane, a quantity sufficient to raise the heating value from 227 to 308 kJ/mol but not enough to result in any unburned hydrocarbon or smoke exhaust emission.

The NO_x levels attained using the EHV fuel are compared to the MHV fuel results in Figure 13. Very little change was evident; ultra-low NO_x levels were again attained. The NO_x emissions were slightly higher at all conditions then achieved for the MHV fuel because of slightly higher flame temperatures associated with the heating value enhancement.

The carbon monoxide emissions and the combustor heat load were also slightly higher than achieved for the MHV fuel. CO emissions reached 250 ppm and 680 ppm at the peak and 50% power test conditions, respectively. This result was contrary to expectations, as higher rich-combustor temperatures would be expected for the EHV fuel and the mixing processes would not be altered, since it was not required to make large changes in the primary/quench airflow split. It is noted that the reported CO value for the 50% condition was obtained at $\phi_p = 1.7$, higher than the corresponding value in the MHV test data. Hence somewhat higher CO would be expected for this condition. The heat load increased approximately 10%, reaching 9.1×10^5 J/m^{2}s at the peak condition, reflecting the increased combustion temperatures.

COMPARISON OF TEST RESULTS FOR LOW HEATING VALUE (LHV) AND MHV FUELS

A low heating value (LHV) fuel was produced on-line by mixing approximately 40% (vol) MHV fuel with 60% (vol) nitrogen. The low heating value of this mixture required fuel flowrates quadruple the MHV fuel flowrates to achieve the same combustor exit temperature. This factor is greater than the ratio of fuel heating values because the additional fuel flow represents a significant mass addition which also must be heated.

Ultra-low NO_x values were achieved for all tests using LHV fuel; no reading greater than 9 ppm was observed. This characteristic was attributed to the fuel composition. Even when reacted in stiochiometric proportions the fuel could only produce a 1200 K temperature rise because the nitrogen, acting as a diluent, absorbed some portion of the energy released during reaction. Hence, it prohibited the existence of high temperature regions necessary for significant NO_x formation.

The fuel characteristics also contributed to the presence of high levels of CO in the combustor exhaust. The exhaust CO concentration depends upon the level of CO entering the lean burner and the rate of CO consumption within the lean burner. The high fuel flowrates, and associated higher primary airflow rate, resulted in rich-combustor residence times shorter than experienced for MHV fuel,

with the gases at lower temperatures. Hence it would be expected that higher CO concentrations would exist at the rich combustor unit. Additionally, as with the MHV fuel tests at elevated exit temperatures, the increased primary airflow degraded the quench section effectiveness. Thus while rapid CO burnup might have been possible, incomplete mixing would limit its efficacy. These trends were supported by the data obtained. Initial tests with ϕ_p values near 1.6 resulted in CO concentrations exceeding 5000 ppm. Subsequent tests were performed at lower ϕ_p in an attempt to raise the CO oxidation rates in the rich combustor. Figure 14 displays the CO levels for design point test conditions with ϕ_p near unity. As can be seen, small changes in ϕ dramatically affected the CO level. Furthermore, it was indicated that minimal CO levels would be obtained for $\phi_p < 1$. That is, fuel-rich operation was undesirable for the LHV fuel because of the attendant CO levels. In limited additional tests, it was determined that a CO level down to 9 ppm could be achieved at $\phi_p = 0.75$. The combustor was stable at this condition, and because of the low flame temperatures the NO_x level was still only 8 ppm.

The extreme sensitivity of CO level to primary stage equivalence ratio is explained in large measure by the sensitivity of primary zone CO production to primary zone equivalence ratio. If reactions proceeded to completion, the equilibrium levels of CO shown in Figure 15 would exist at the primary zone exit. As indicated, equilibrium CO levels for LHV fuel drop by three orders of magnitude as the primary zone equivalence ratio is changed from a value of 1.2 to 0.8. The levels of CO measured are close to the theoretical equilibrium levels which indicates that for LHV fuel most of the chemical reaction occurs in the primary zone, and little reaction in the lean zone.

SECTION IV
CONCLUSIONS

The objectives of this study was to evaluate the performance and emission characteristics of a rich-lean staged combustor fired on coal gas fuel. Tests were performed using four test fuels including three chemically bound nitrogen-free fuels with heating values of 88, 227, 308 kJ/mol (100, 258, 349 Btu/scf respectively) and a 227 kJ/mol (258 Btu/scf) fuel doped with 0.7% (vol) ammonia. The test results permit the following conclusions to be drawn:

1. Staged, rich-lean combustion represents the desirable approach to achieve ultra-low NOx and CO emissions for coal gas fuels with heating values of 227 kJ/mol (258 Btu/scf) or higher.

2. Lean combustion represents the desirable approach to achieve ultra-low NOx and CO emissions for coal gas fuels with low heating values (88 kJ/mol (100 Btu/scf)).

3. Staged combustion has the ability to limit NH_3 to NOx conversion rates to less than 5%. NOx emissions below the EPA limit can readily be achieved.

SECTION V
REFERENCES

1. Rosfjord, T. J., et al.: Evaluation of Synthetic Fuel Character Effects on Rich-Lean Stationary Gas Turbine Combustion Systems. EPRI Research Project RP1898-1, to be published.

2. Mosier, S. A. and R. M. Pierce: Advanced Combustion Systems for Stationary Gas Turbine Engines. Environmental Protection Agency Contract No. 68-02-2136 Final Report. March 1980.

3. Russell, P. L., et al.: Evaluation of Concepts for Controlling Exhaust Emissions from Minimally Processed Petroleum and Synthetic Fuels. ASME Paper 81-GT-157, March 1981.

TABLE I. COAL GAS TEST FUELS

Composition (vol %)	Commercial Gasifiers Typical Compostion		UTC Simulation			
	TEXACO	LURGI	MHV	LHV	EHV	MHV-FN
CO	50.0	61.1	40	16	38	39
H_2	37.5	26.8	40	16	38	39
CO_2	10.7	4.8	20	8	19	20
N_2	1.5	0.7	0	60	0	0
C_3H_8	--	--	0	0	4	0
NH_3	--	--	0	0	0	0.7
CH_4	0.3	6.4	0	0	0	0
Higher Hydrocarbons	--	0.2	0	0	0	0
Higher Heating Value (Btu/scf)	285	350	258	103	349	258

TABLE II. TEST RIG INSTRUMENTATION
SYM1,2, denotes multiple measurements

Symbol	Range	Parameter
Air Supply		
PVUPT	4.0 MPa	Pressure upstream of total flow venturi
PVTHT	3.0 MPa	Pressure at throat of total flow venturi
TVUPT	Type K	Temperature upstream of total flow venturi
PHIN	3.5 MPa	Pressure at inlet to electrical heater
PHEX	3.0 MPa	Pressure at exit of electrical heater
THEX	Type K	Temperature at exit of electrical heater
PVUPP	3.0 MPa	Pressure upstream of primary flow venturi
PVTHP	1.4 MPa	Pressure at throat of primary flow venturi
TVUPP	Type K	Temperature upstream of primary flow venturi
Fuel Supply		
PVOPF	3.5 MPa	Pressure upstream of $CO/CO_2/H_2$ gas venturi
PVTHF	3.5 MPa	Pressure at throat of $CO/CO_2/H_2$ gas venturi
TVUPF	Type T	Temperature upstream of $CO/CO_2/H_2$ gas venturi
PVUPN	3.5 MPa	Pressure upstream of N_2 venturi
TVUPN	Type T	Temperature upstream of N_2 venturi
WC3H8	CPS	Flowrate of liquid propane fuel
TC3H8	Type T	Temperature of liquid propane
PVUPNH3	3.5 MPa	Pressure upstream of NH_3 venturi
TVUPNH3	Type T	Temperature of upstream NH_3 venturi
PFINJ	3.0 MPa	Pressure of fuel at injector inlet
TFINJ	Type K	Temperature of fuel at injector inlet
Combustor Model		
P3P1,2	1.7 MPa	Pressure at primary airflow
T3P	Type K	Temperature of primary airflow
P3Q	1.7 MPa	Pressure of secondary airflow
T3Q	Type K	Temperature of secondary airflow
PRICH	1.7 MPa	Pressure in rich combustor
PLEAN	1.7 MPa	Pressure in lean combustor
TLEX1,2,3	Type B	Temperature at exit of lean burner
WCOOL	cps	Output of combustor coolant turbine meter
TCIN	Type T	Temperature of coolant at inlet to rich combustor
TCPEX1,2,3	Type T	Temperature of coolant at exiting rich combustor
TCLEX	Type T	Temperature of coolant exiting lean combustor
RSMOKE	-	Reflectance of smoke sample spot
XI	-	Output of emissions analyzers
RI	-	Range of emissions analyzers

TABLE III. EMISSIONS ANALYSIS INSTRUMENTATION

Component	Range	Instrument and Detection Method	Instrument Error % Full Scale
THC	0-1 ppmv	Flame Ionization Detector	±5.0
	Intermediate ranges		±1.0
	0-10%		±1.0
NO_x	0-2.5 ppmv	Chemiluminescence Detector	±1.0
	Intermediate ranges (6)	TECO Model 10A	±1.0
	0-10,000 ppmv		±1.0
CO	0-200 ppmv	Nondispersive Infrared	±2.0
	0-1000 ppmv	Beckman Model 315B	±1.0
	0-5000 ppmv		±1.0
CO_2	0-2%	Nondispersive Infrared	±1.0
	0-5%	Beckman Model 315B	±1.0
	0-15%		±1.0
O_2	0-1%	Paramagnetic Analyzer	±1.0
	0-5%	Scott Model 150	±1.0
	0-10%		±1.0
	0-25%		±1.0

TABLE IV. TEST CONDITIONS

Condition	Total Airflow kg/s	Inlet Temperature K	Combustor Pressure MPa	Exit Temperature K	ϕ_p*
1. Peak	1.36	672	1.37	1356	1.6
2. Baseload	1.18	644	1.24	1367	1.6
3. 50%	0.73	533	0.69	1367	1.6
4. Pk-Low P	0.34	672	0.34	1356	1.6
5. Signature	0.34	672	0.34	Variable	2.4
6. Signature	0.34	672	0.34	Variable	1.4

*Primary combustor equivalence ratio (ϕ_p) target values are indicated. Actual test values depended upon emission characteristics determined from signature test series.

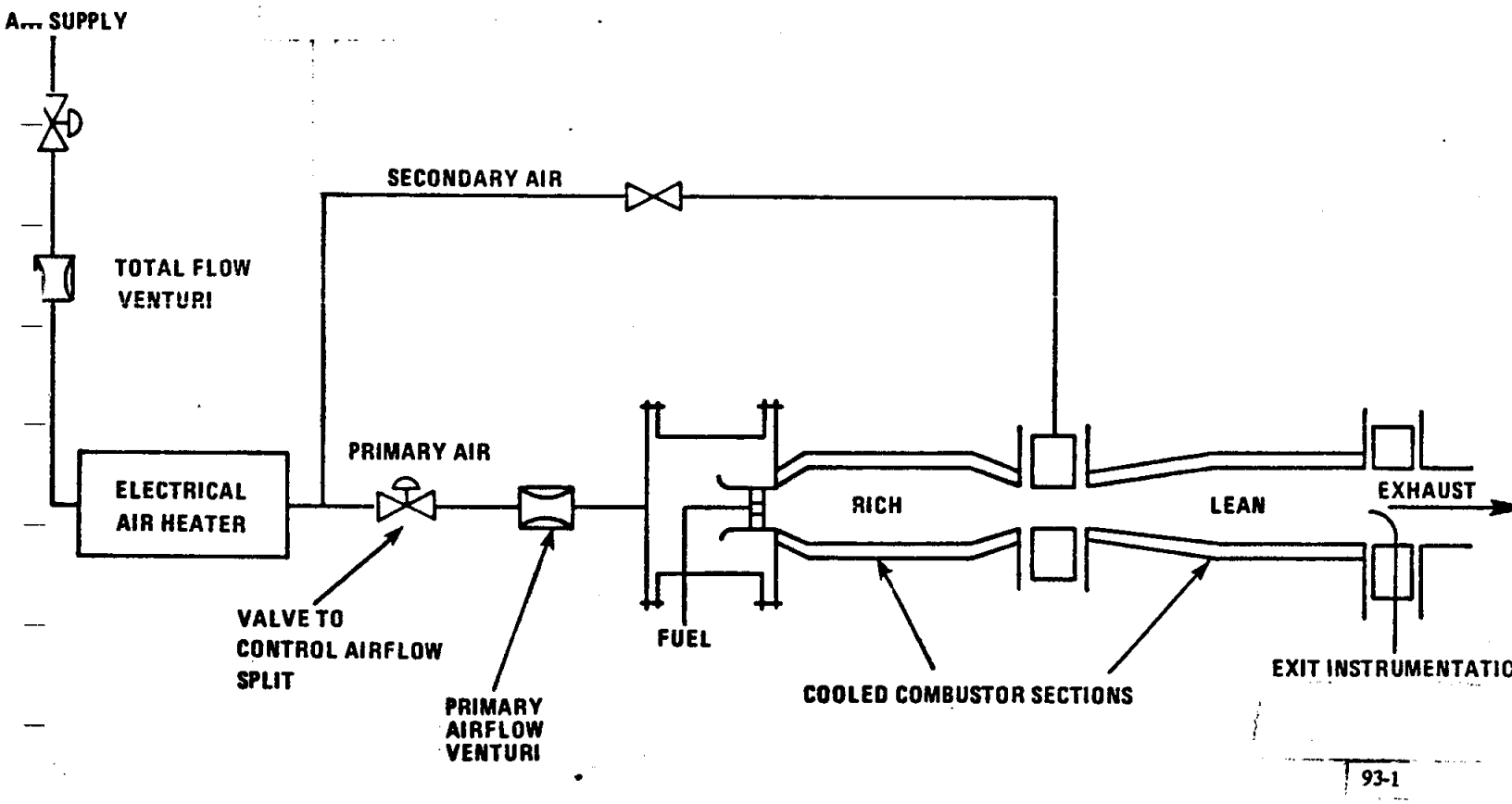

Figure 1. Synthetic Fuel Combustor Rig

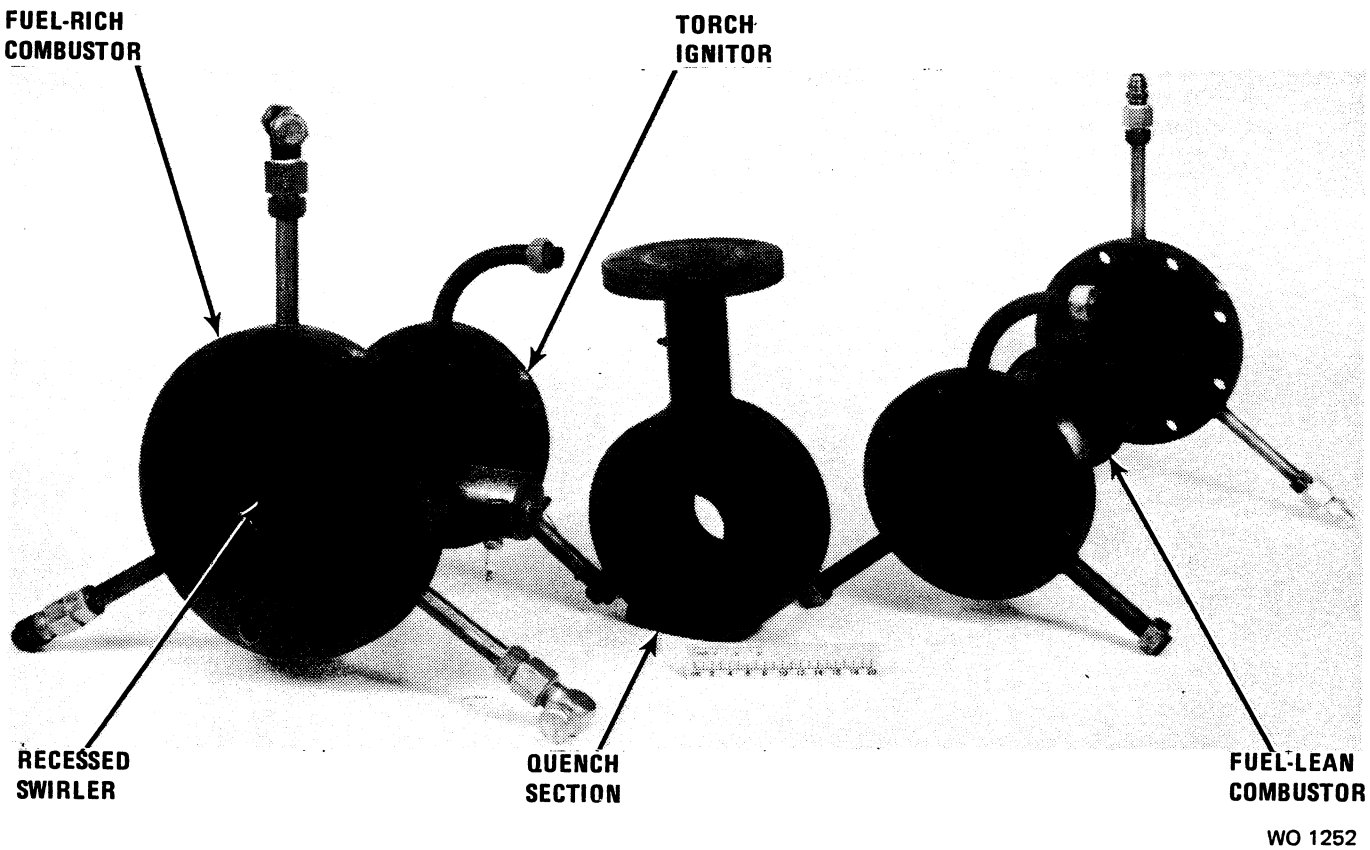

Figure 2. Subscale Rich-Lean Combustor Hardware

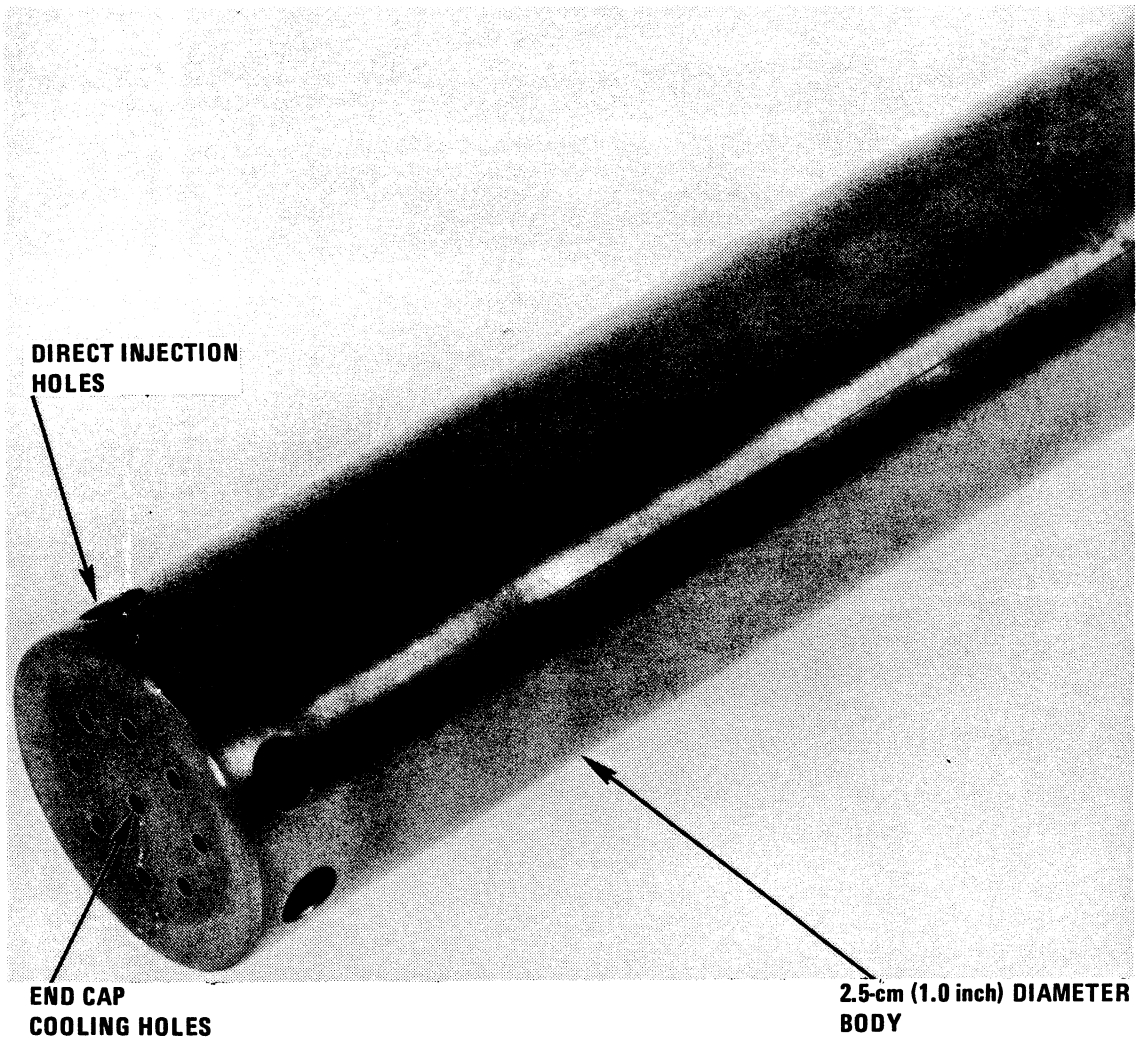

Figure 3. Gaseous Fuel Injector

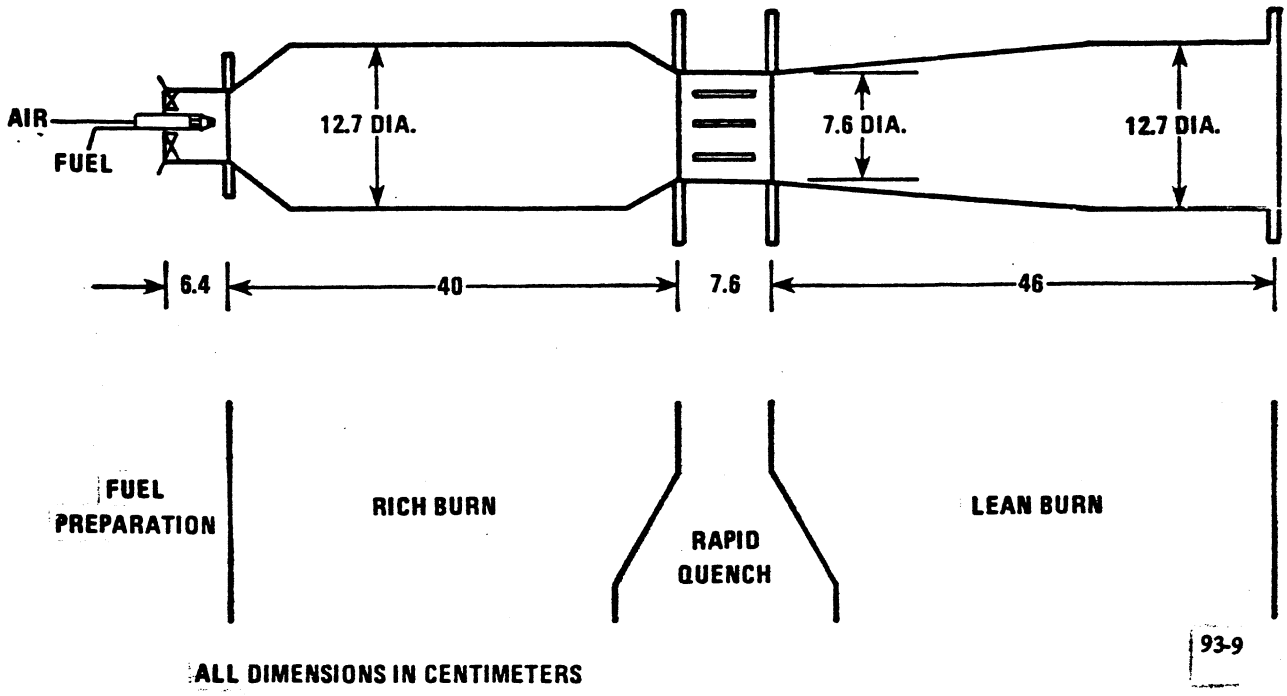

Figure 4. Subscale Rich-Lean Combustor Configuration

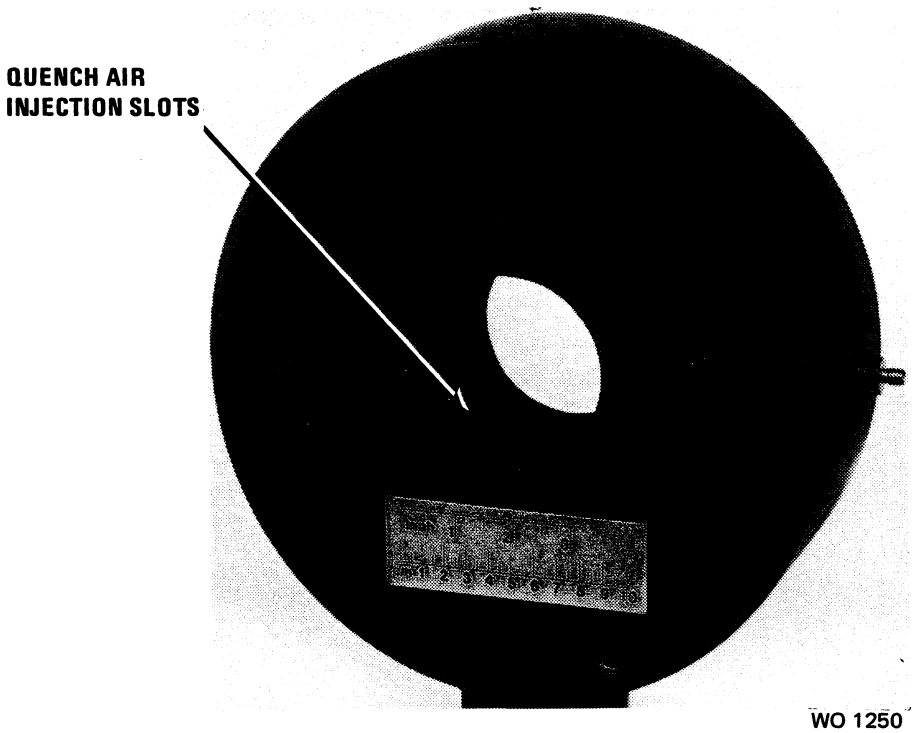

Figure 5. Quench Section of Subscale Combustor

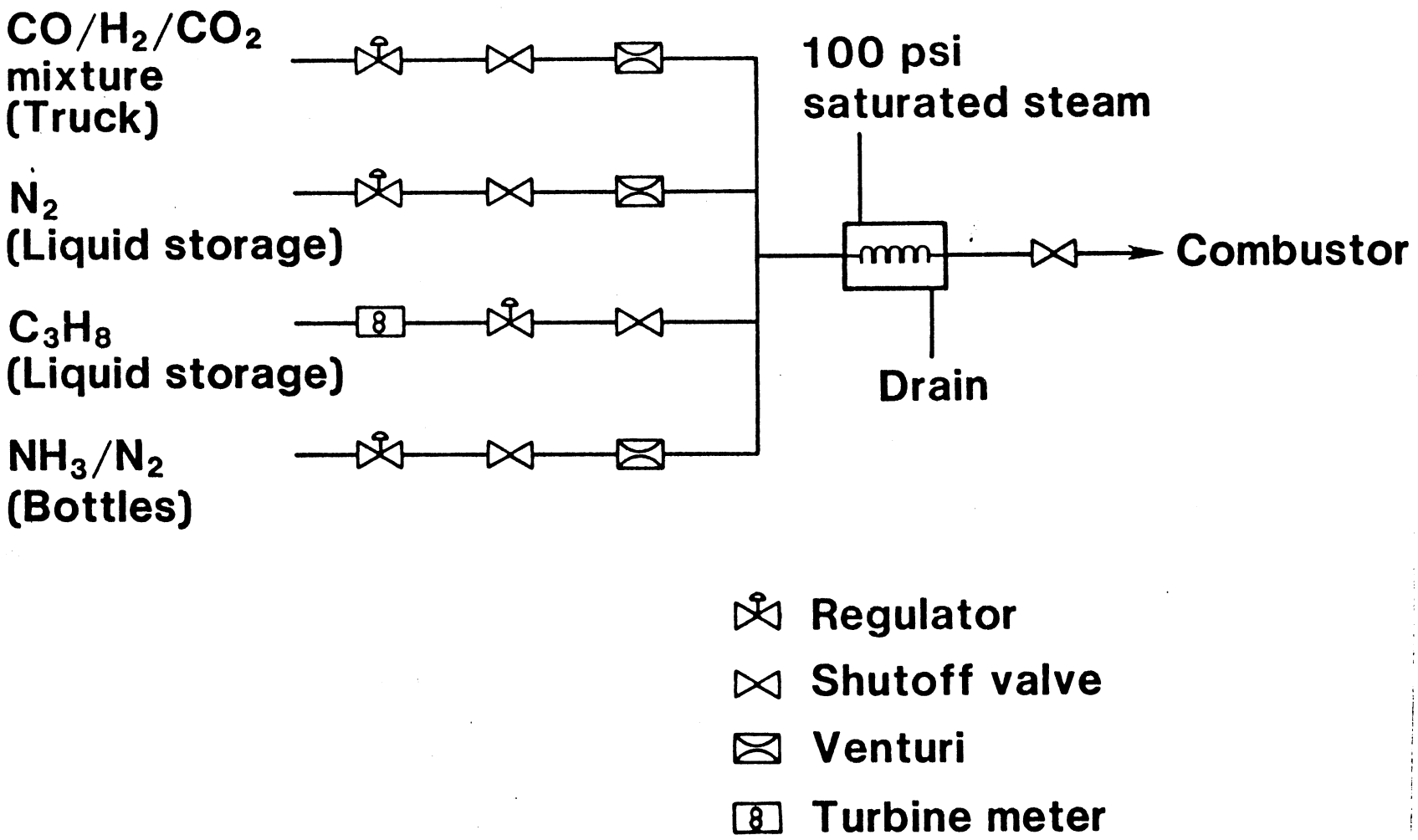

FC17123
810809

Figure 6. Gaseous Fuel Delivery System

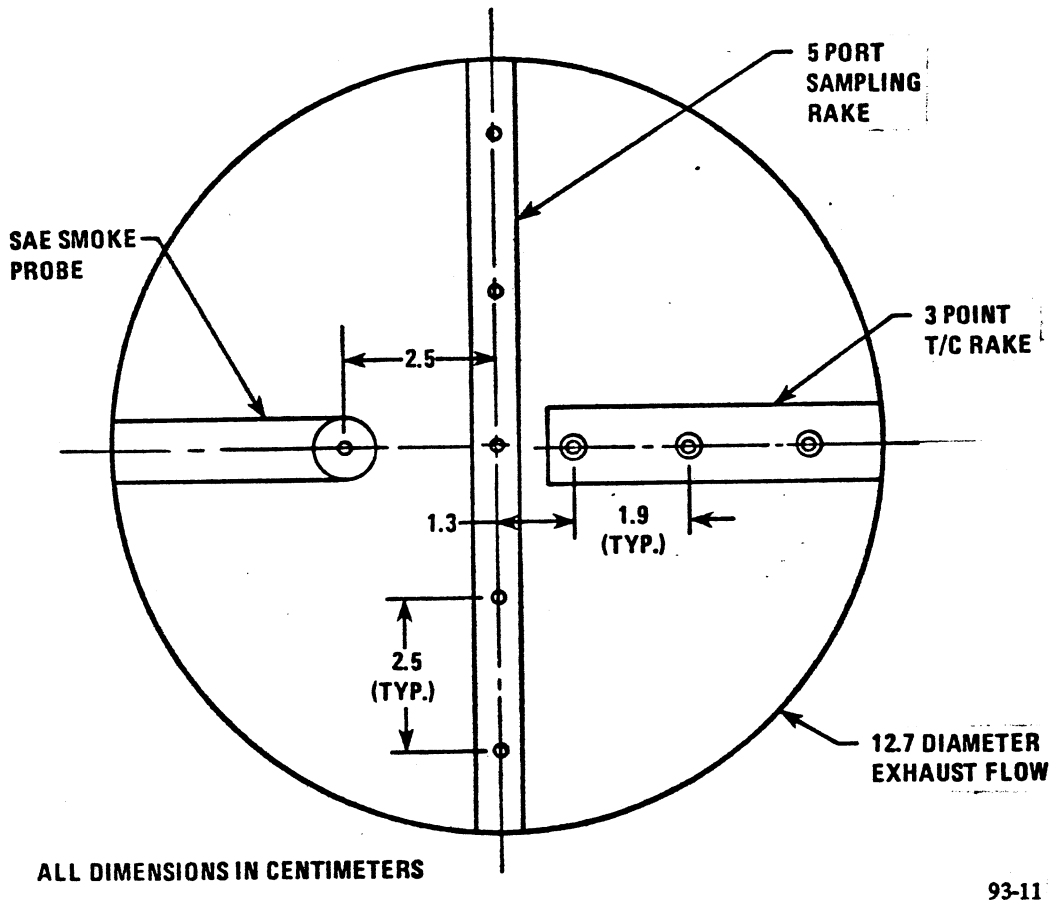

Figure 7. Exit Plane Instrumentation (Viewed Downstream)

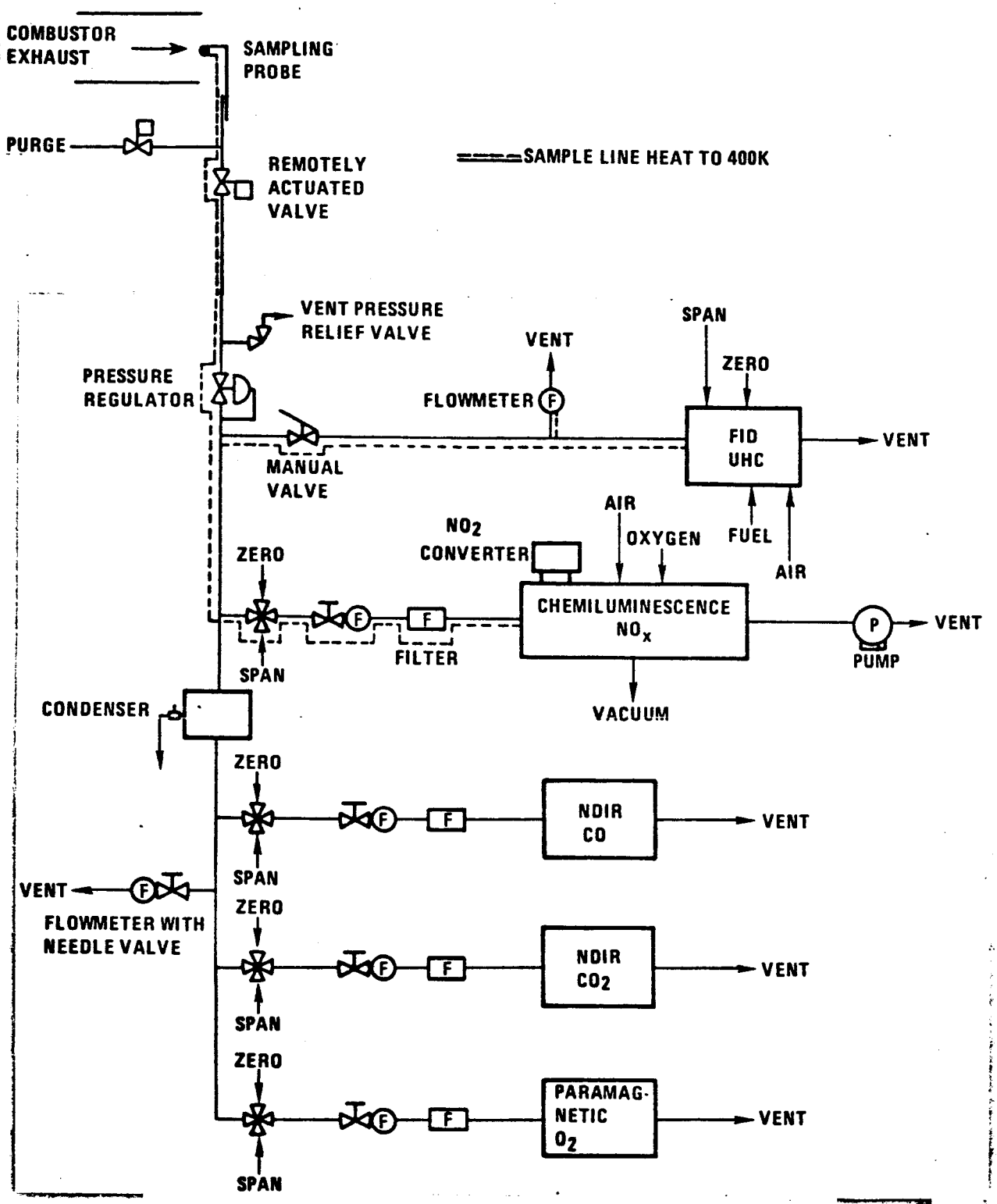

93-12

Figure 8. Emissions Sampling and Analysis System

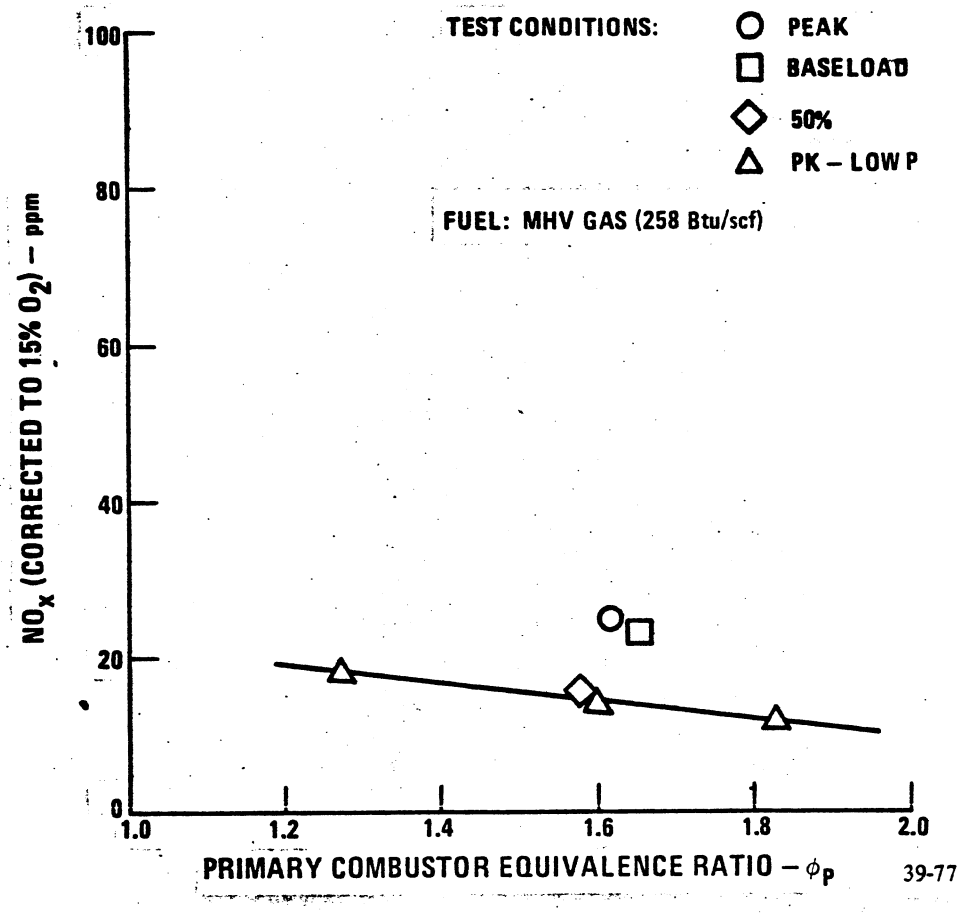

Figure 9. NO_x Dependence on Primary Combustor Equivalence Ratio for MHV Fuel

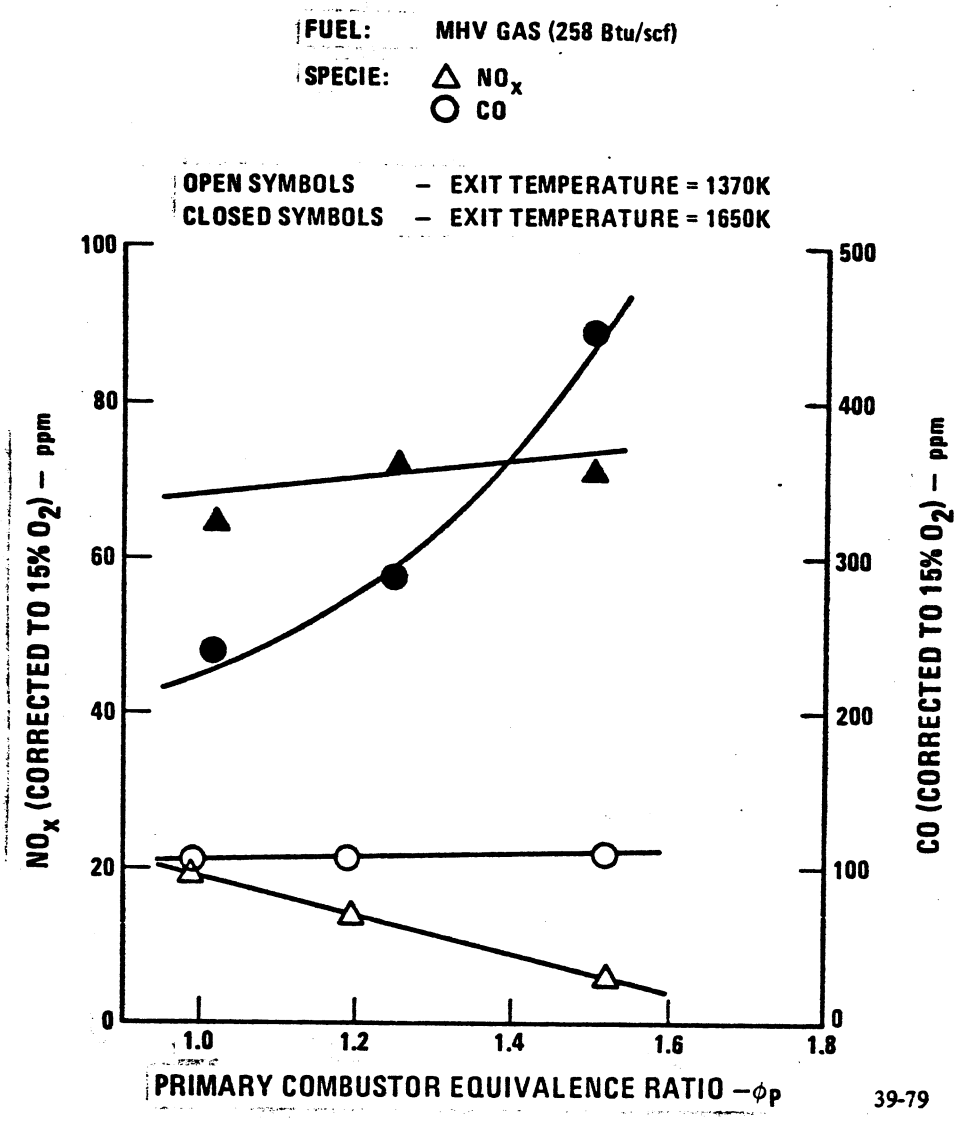

Figure 10. Comparison of Exhaust Emissions for Operation at Exit Temperatures of 1370K and 1650K

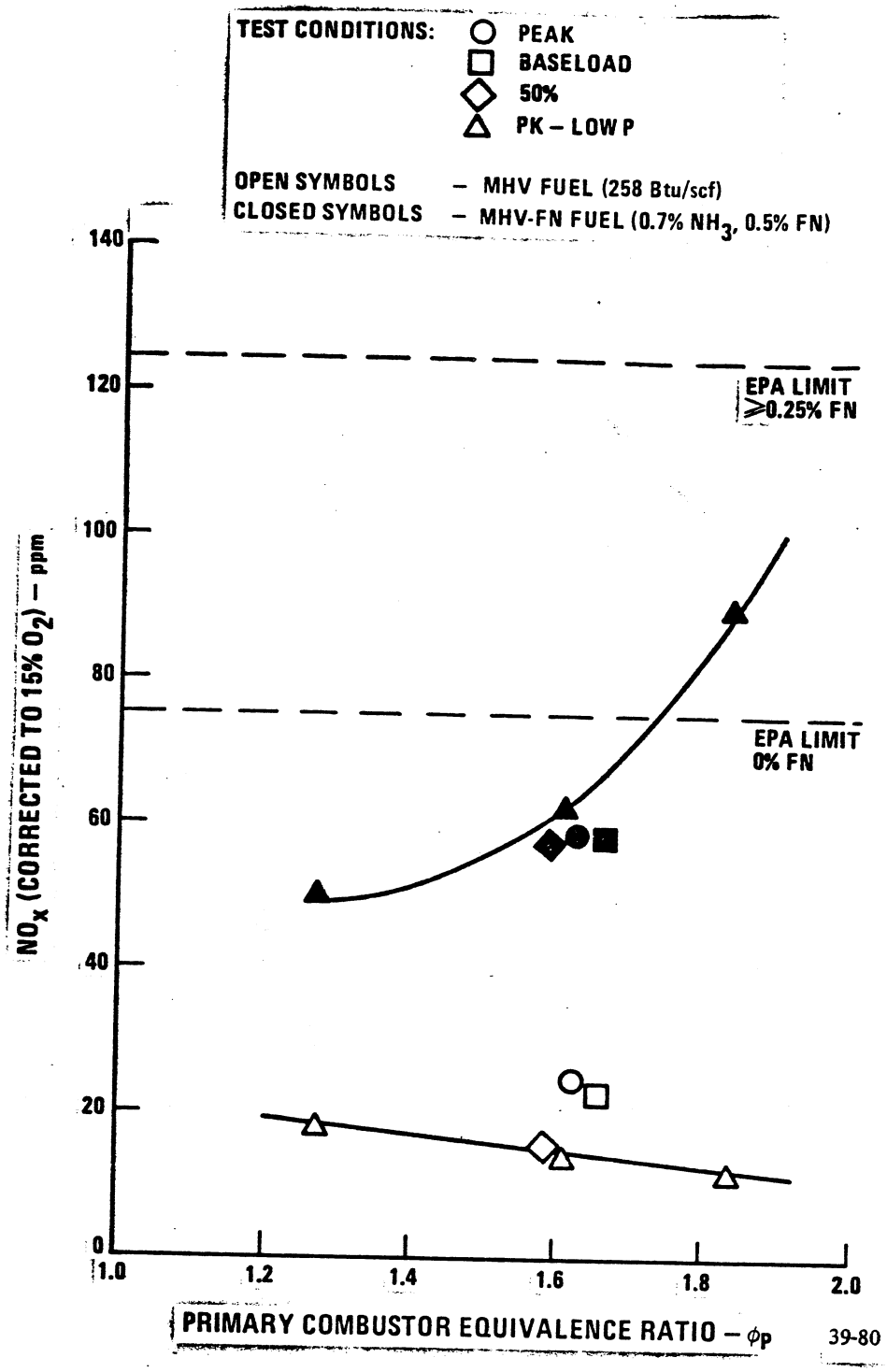

Figure 11. Effects of NH_3 Addition on NO_x Signature

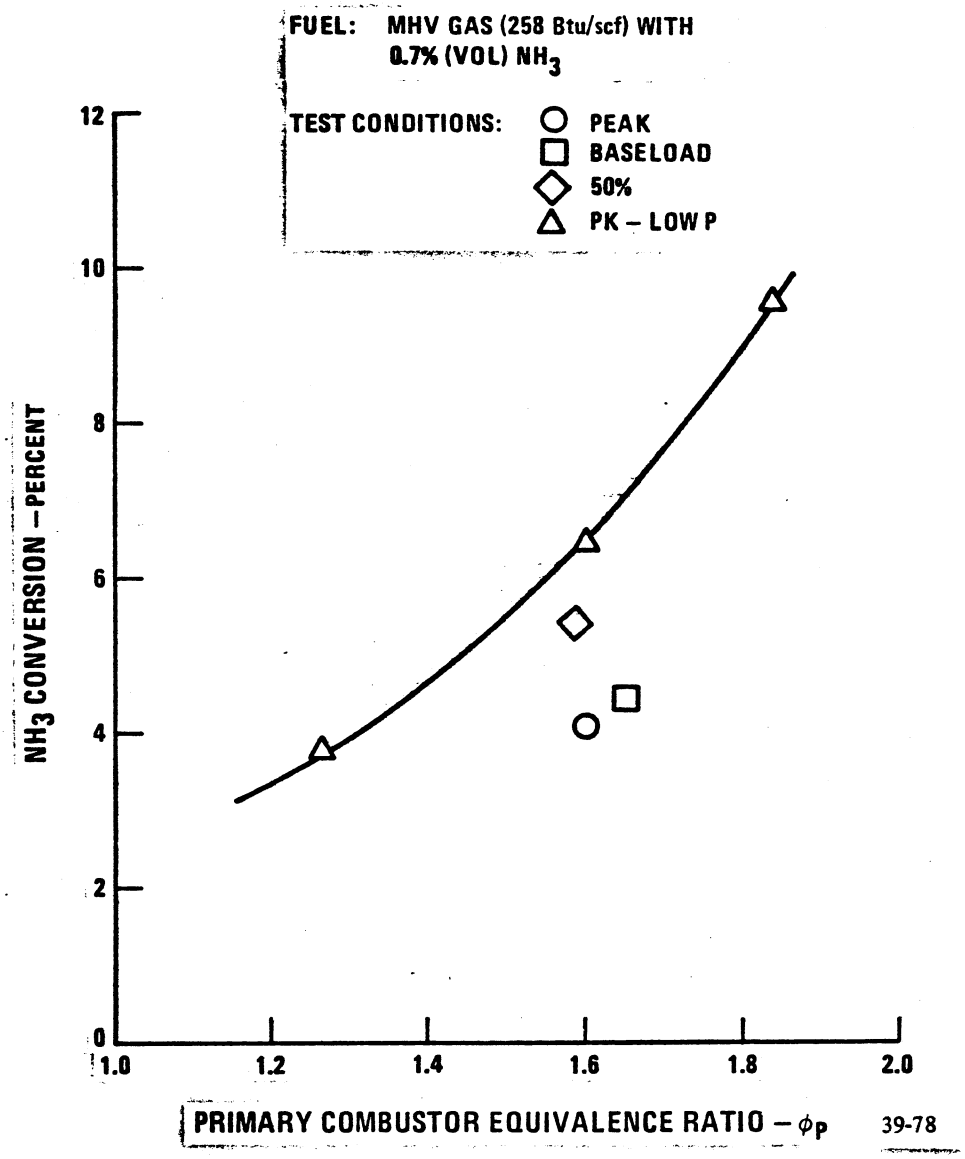

Figure 12. Dependence of NH_3 Conversion on Primary Combustor Equivalence Ratio

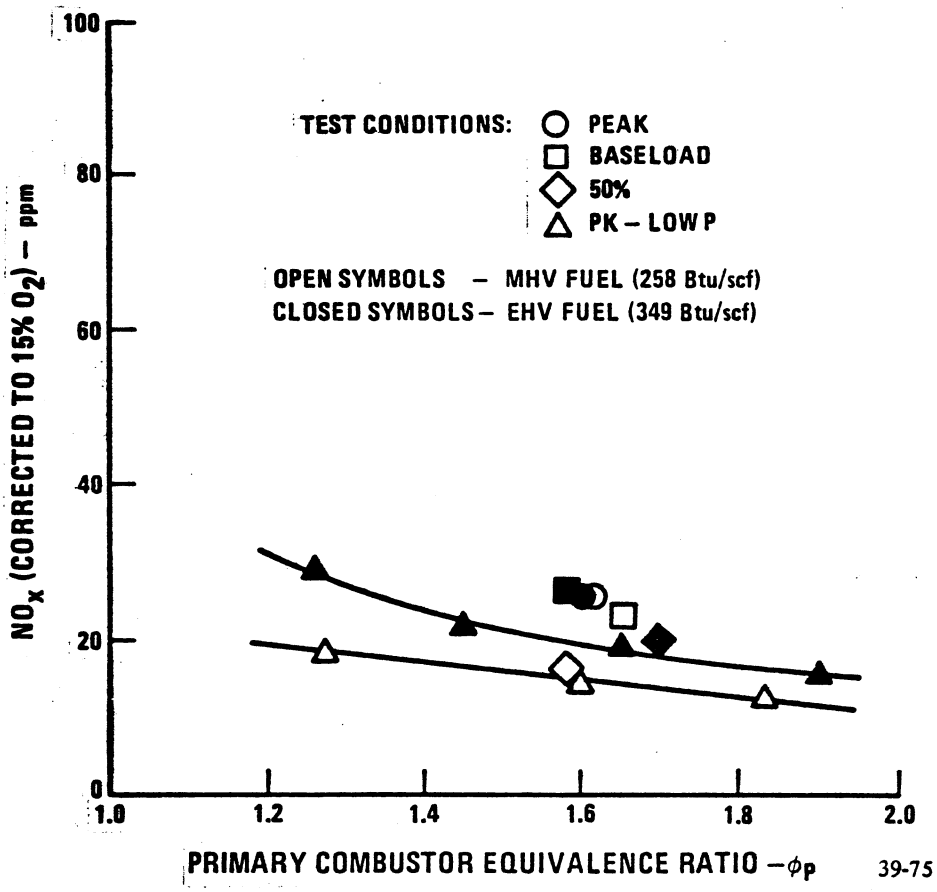

Figure 13. Comparison of NO_x Signature for MHV and EHV Fuels

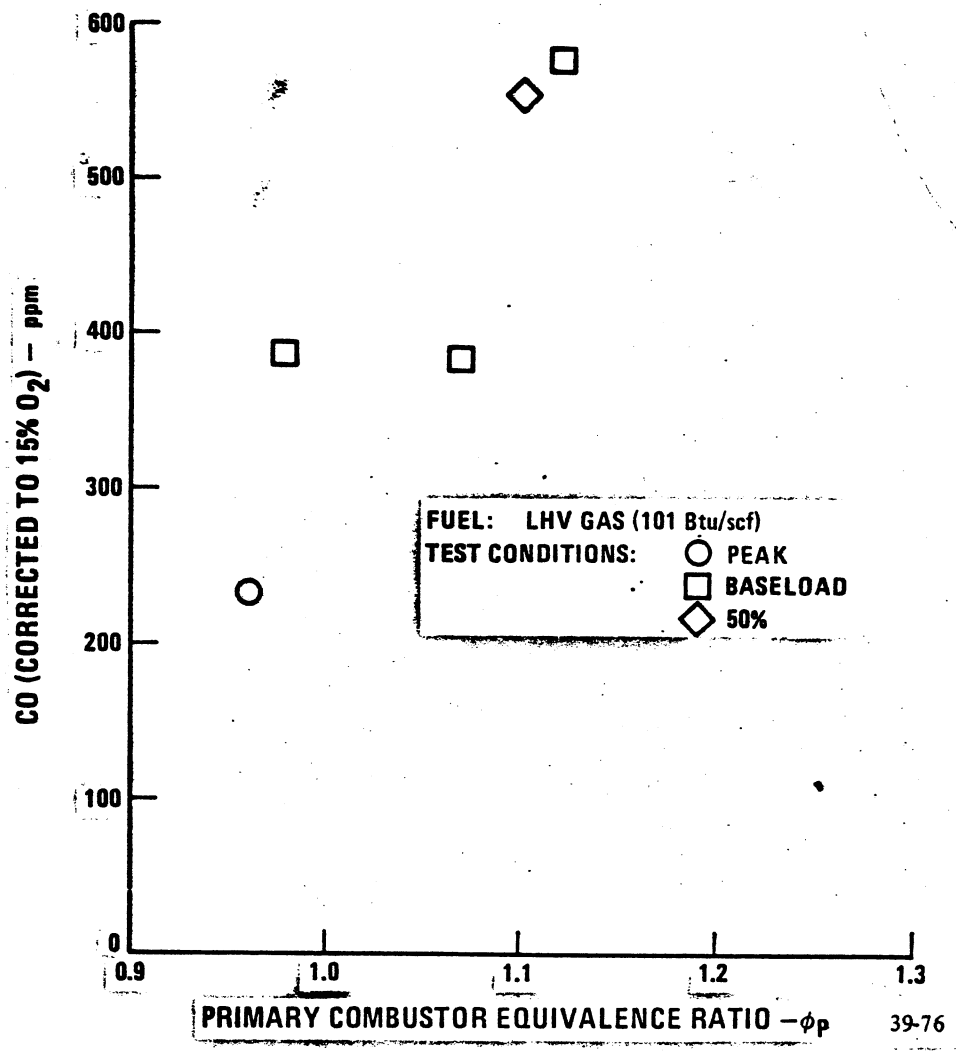

Figure 14. CO Emission Dependence on Primary Combustor Equivalence Ratio for LHV Fuel

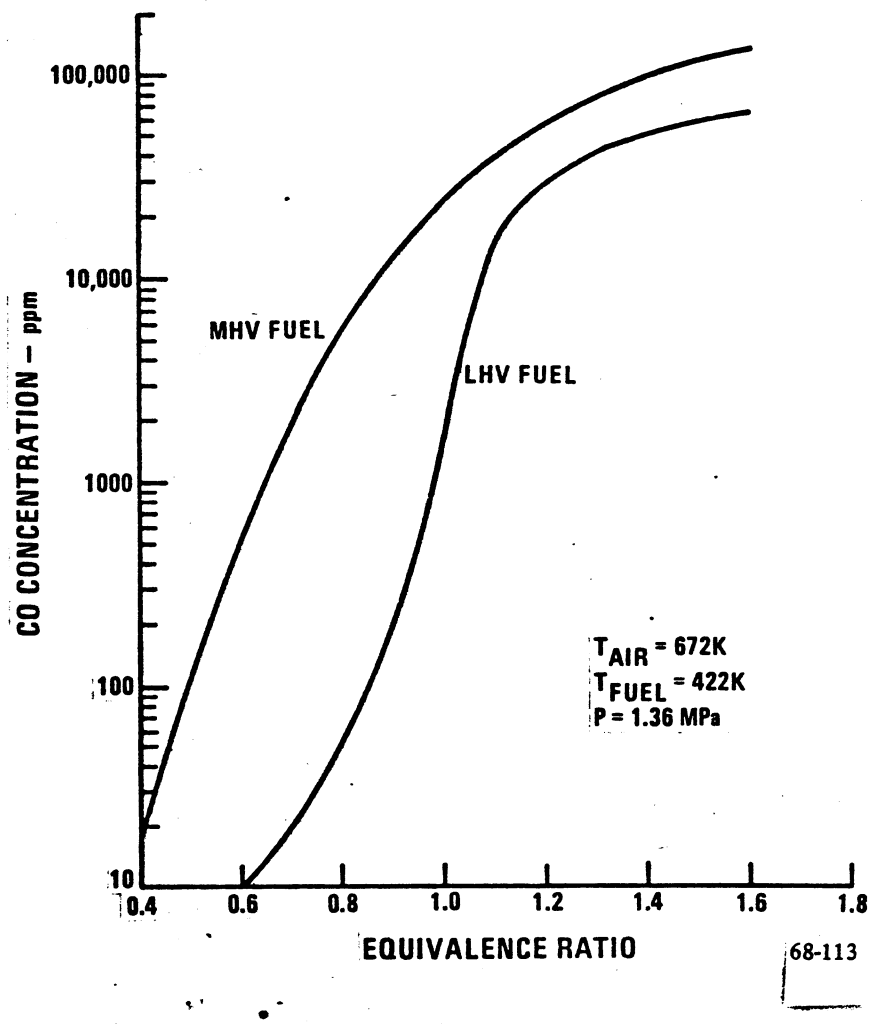

Figure 15. Equilibrium CO Levels for MHV and LHV Fuels

REPORT DOCUMENTATION PAGE

Form Approved
OMB No. 0704-0188

Public reporting burden for this collection of information is estimated to average 1 hour per response, including the time for reviewing instructions, searching existing data sources, gathering and maintaining the data needed, and completing and reviewing the collection of information. Send comments regarding this burden estimate or any other aspect of this collection of information, including suggestions for reducing this burden, to Washington Headquarters Services, Directorate for Information Operations and Reports, 1215 Jefferson Davis Highway, Suite 1204, Arlington, VA 22202-4302, and to the Office of Management and Budget, Paperwork Reduction Project (0704-0188), Washington, DC 20503.

1. AGENCY USE ONLY (*Leave blank*)

2. REPORT DATE
January 1982

3. REPORT TYPE AND DATES COVERED
Final Contractor Report

4. TITLE AND SUBTITLE
Low NOx Heavy Fuel Combustor Concept Program
Phase IA Coal Gas Addendum

5. FUNDING NUMBERS
WU–None
DEN3–149

6. AUTHOR(S)
Thomas Rosfjord and Richard Sederquist

7. PERFORMING ORGANIZATION NAME(S) AND ADDRESS(ES)
United Technologies Corporation
Power Systems Division
P.O. Box 109
South Windsor, Connecticut 06074

8. PERFORMING ORGANIZATION REPORT NUMBER
E–14189

9. SPONSORING/MONITORING AGENCY NAME(S) AND ADDRESS(ES)
National Aeronautics and Space Administration
Washington, DC 20546–0001
and
U.S. Department of Energy, Office of Coal Utilization
Washington, DC 20545

10. SPONSORING/MONITORING AGENCY REPORT NUMBER
NASA CR–165577
DOE/NASA/0149–2
UTC GTR–3932

11. SUPPLEMENTARY NOTES
Final report prepared under Interagency Agreement DE–AI01–77ET13111. Project Manager, D. Shultz, Aerothermodynamic and Fuels Division, NASA Lewis Research Center, Cleveland, Ohio 44135.

12a. DISTRIBUTION/AVAILABILITY STATEMENT
Unclassified - Unlimited
Subject Category: 44
Available electronically at http://gltrs.grc.nasa.gov
This publication is available from the NASA Center for AeroSpace Information, 301–621–0390.

12b. DISTRIBUTION CODE

13. ABSTRACT ***(Maximum 200 words)***

An experimental program to investigate the performance and emissions from a rich-lean combustion fired on simulated coal gas fuels has been conducted. The burner was a 12.7-cm diameter axially-staged device originally designed for operation with high heating value liquid fuels. A simple, tubular fuel injector was substituted for the liquid fuel nozzle; no other combustor modifications were made. Four test fuels were investigated including three chemically bound nitrogen-free gas mixtures with higher heating values of 88, 227, and 308 kJ/mol (103, 258, and 349 Btu/scf), and a 227 kJ/mol (258 Btu/scf) heating value doped with ammonia to produce a fuel nitrogen content of 0.5 percent (wt.) Stable, ultra-low NO_x, smoke-free combustion was attained for the nitrogen-free fuels. Results with the doped fuel indicated that less than 5 percent conversion of NH_3 to NO_x and NO_x levels below Environmental Protection Agency (EPA) limits could be achieved. In some instances, excessive CO levels were encountered. It was shown that use of a burner design employing a less fuel-rich primary zone than that found optimum for liquid fuels would yield more acceptable CO emissions.

14. SUBJECT TERMS
Gas turbine combustor; Low NO_x; Rich-lean combustion; Synthetic fuels; Coal gas

15. NUMBER OF PAGES
52

16. PRICE CODE

17. SECURITY CLASSIFICATION OF REPORT	18. SECURITY CLASSIFICATION OF THIS PAGE	19. SECURITY CLASSIFICATION OF ABSTRACT	20. LIMITATION OF ABSTRACT
Unclassified	Unclassified	Unclassified	